On Behalf of the Army Center of Excellence, Subsistence…

Welcome to the 2007 Army Worldwide Food Service Workshop

Wardell Carey
Facilities & Equipment Division
Equipment Specialist
Phone (804) 734-3450 (DSN) 687
careyw@lee.army.mil

Army Field Feeding Systems Update

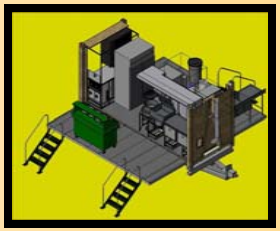

Topics

- Modern Burner Unit
- Mobil Kitchen Trailer
- Food Sanitation Center
- Containerized Kitchen
- Containerized Kitchen P3I- Thermal Fluid (CKTF)
- Multi Temperature Refrigerator Containerized System
- Assault Kitchen

Mission

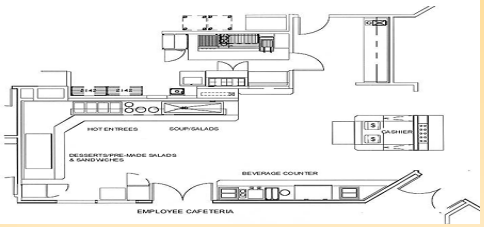

251-500 / 501-800 / 801-1300

Dining Facility Designs

Equipment Budget For MCA Projects

Facilities & Equipment Division

Equipment Schedule

Field Food Service Equipment

Modern Burner Unit (MBU)

MISSION:
Primary heat source for Cooking Operations in All Army Field Feeding Equipment.

<u>FIELDING</u>: Complete!

Flame Sensor Upgrade

Original flame sensors begin failing at 270°F

New flames sensors operate at 350+°F

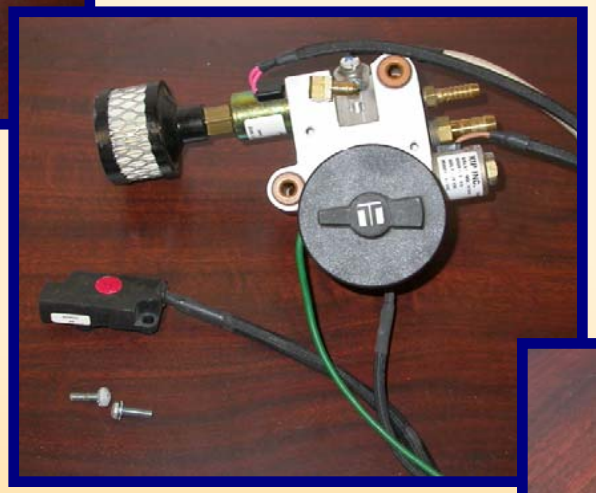

If the burner shuts down 4 seconds after pressing the start button, the flame sensor has failed

If MBU can only be kept running by holding the start button in, the flame sensor has failed

New flame sensors have serial numbers beginning with 89568-0001

NSN 7310-01-462-4918

Fuel Delivery Block Upgrade

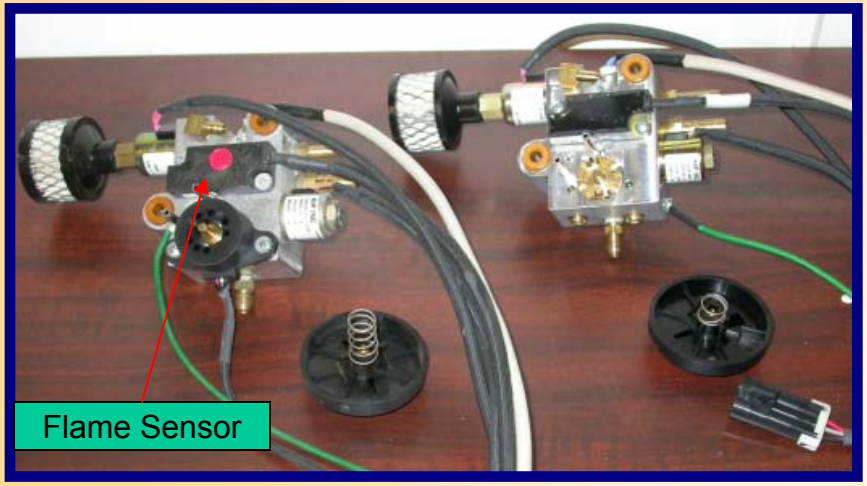

- Primary purpose: Increase the range of heat output. Lower low and higher high.
- Secondary purpose: Reduce noise made by the MBU on low.

- Contractor applied MWO started June 2004 at Ft. Lee
- Effort will take 3 to 4 years.
- New Fuel Delivery Block comes with new flame sensor.

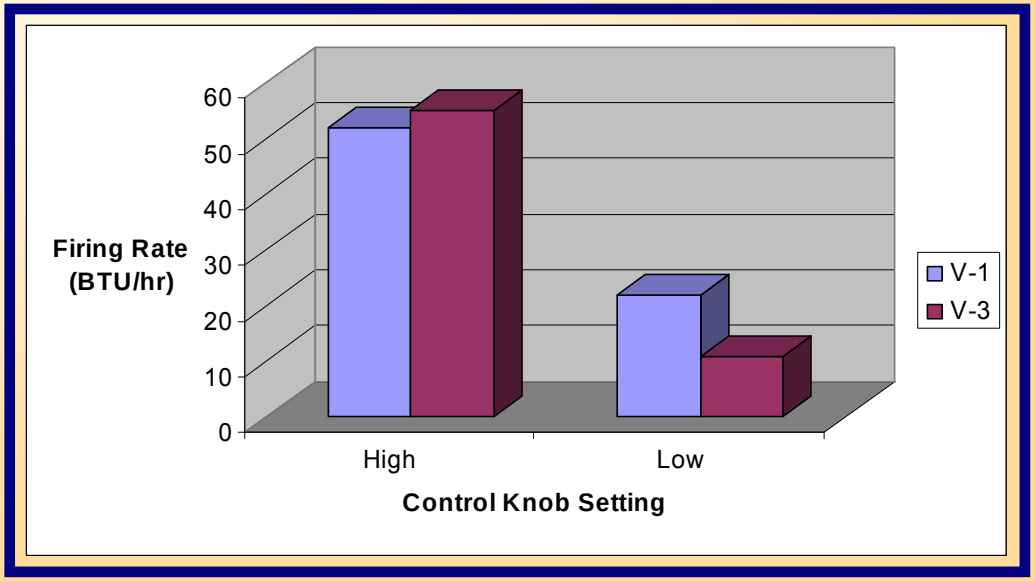

Fuel Delivery Block Upgrade

Control panel and data plate decals will be changed to reflect updated MBU

Current NSN

Power Converter

7310-01-502-9455

- ½ inch shorter
- 5 lbs lighter
- More robust and reliable

Thermostatic Control (Prototype)

- Automatically cycles burner on and off to maintain set point temperature.
- Target applications: Sanitation sinks, CK oven & CK steam-table.
- Same control designs for all appliances.
- Planned fielding in 2008

Mobil Kitchen Trailer (MKT)

- National reset program to fix kitchens returning from AOR.
- Letterkenny Army Depot has the contract. **FULLY funded**
- Axicor, Inc Reset Program 910-863-4655. **UNIT funded**

MKT Reset Kit
JSN 05-20

- Need/Requirement
  - ➔ The MKT will remain heavily used well into the future
    - Approximately 4000 MKTs in the field
    - Containerized Kitchen will only replace 25 percent of MKTs
    - The proposed MKT-Future is not planned for procurement until FY15
  - ➔ Total Life Cycle Management (TLCM) Roadmap May 07
    - **Indicates MKT Reset will be required through at least FY17**
    - **Need to leverage the MKT Reset program**
      - **To assure maximum sustainability throughout the MKT lifecycle**
  - ➔ Address the following strategic guidance
    - Joint Vision 2020
    - Defense/Military Transformation
    - USD(ALT) Strategic Goals Implementation Plan
    - Army Force Operating Capability-Maneuver Sustainment

MKT Reset Kit
JSN 05-20

- Description
  - ➔ Operational Concept
    - Incorporate new parts, equipment and/or materials as MKTs undergo reset
    - **Potentially new items include power source, oven, skillet, TPHT, nesting insulated food containers, less costly manufacturing processes**
    - Assure the MKT remains relevant and sustainable during its remaining lifecycle

MKT Reset Kit
JSN 05-20

- Description

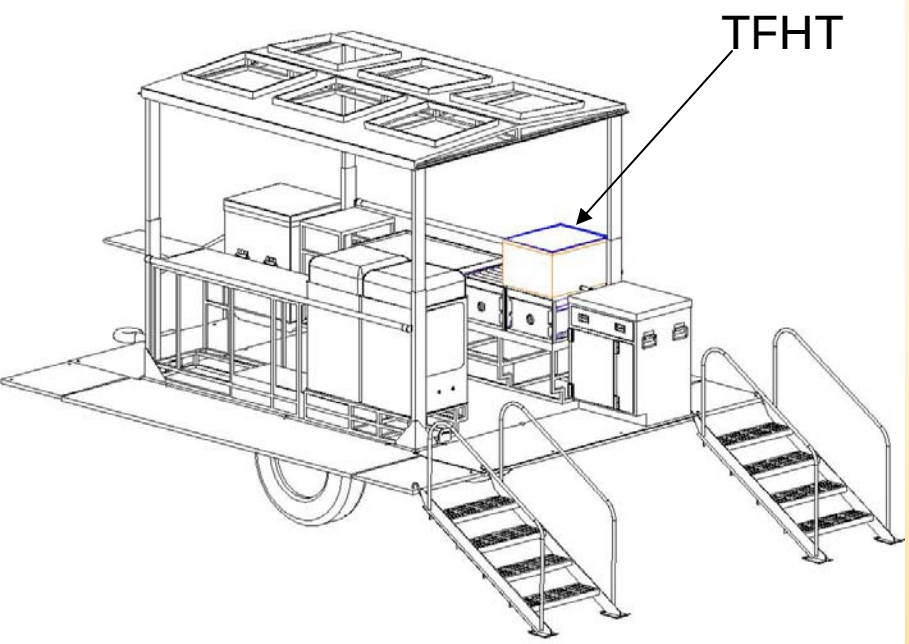

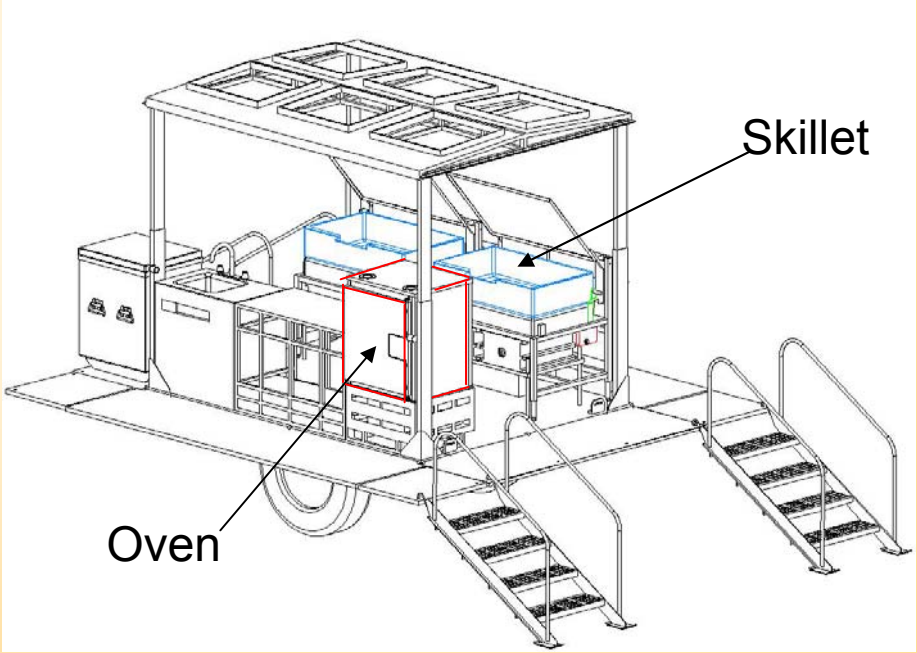

Mobile Kitchen Trailer - Future

What is the problem?

The current MKT is based on '60s technology with inefficient open-flame burners powered by a loud engine-driven generator

- Uncomfortable environment w/ heat stress / combustion products
- Limited water heating capability
- Low capacity appliances w/ no timers or thermostats

The MKT's 1 ½ ton trailer not compatible w/ LMTV

- Roll-overs because of tracking problems
- Over weight; Obsolete wheels

Large footprint w/ Separate Food Sanitation Center

What are the barriers to solving this problem?

Reliable technology for cogeneration / thermal fluid heat transfer

How will you overcome those barriers?

Develop reliable cogeneration / thermal fluid heat transfer technology, integrate w/ high capacity commercial appliances and sanitation, and integrate on 2 ½ ton LMTV trailer

Quantitative Metrics:

Current:

9 - 60K BTU/hour burners, 15K BTU/hour heat transfer each

18-27 gallons of fuel/meal, up to 240 gallons water (sanitation)

Low capacity, military unique appliances, 3 hours/meal

2 footprints (sanitation center and kitchen)

Goal:

1 - 360K BTU/hour burner, 300K BTU/hour heat transfer

5 gallons of fuel/meal, 60 gallons water (sanitation)

High capacity, commercial appliances, 2 hours/meal

1 footprint (integrate sanitation center w/ kitchen)

Leveraging:

DARPA funded Rankine cogenerator

2 – SBIRs Combined Heat & Power (Brayton and Stirling)

What is the Warfighter Payoff?:

Reduced fuel and water consumption

Reduced transportation costs and footprint

Reduced operating and support costs

Improved Manpower utilization

Improved ability to produce high quality meals

Larger work area and Improved working conditions

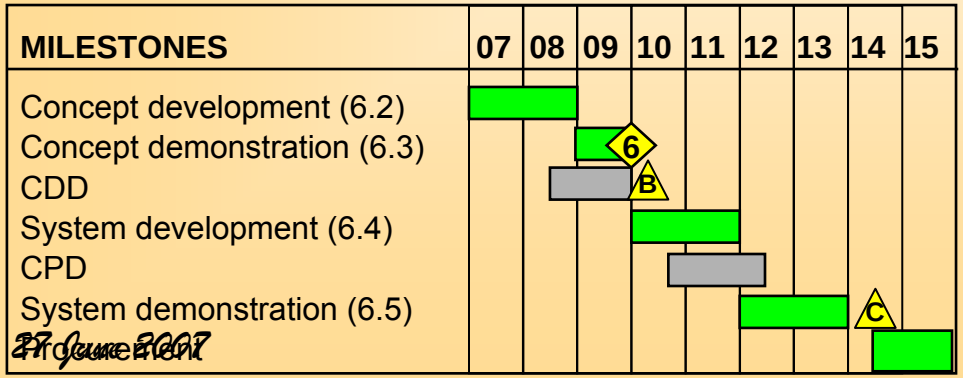

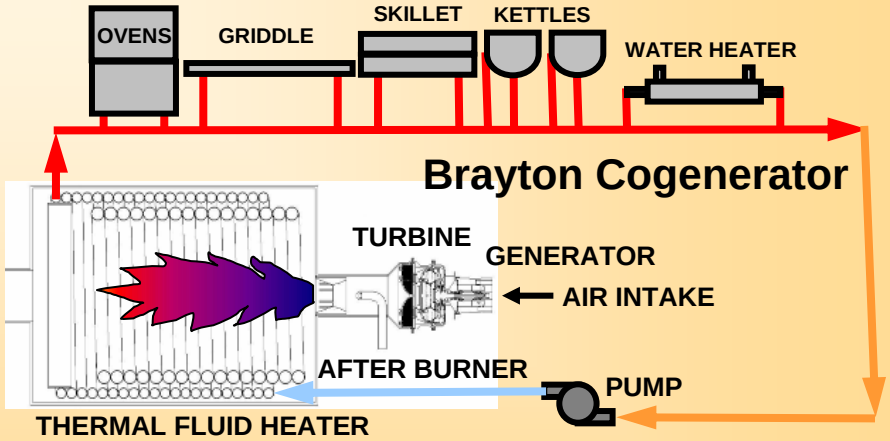

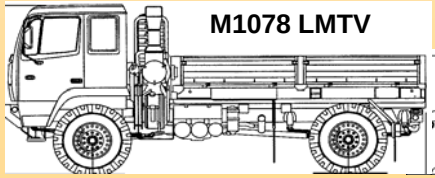

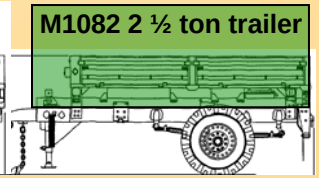

Food Sanitation Center Improvements

CO Monitor

Grease Separator

Sink Fill Pump Assembly

Hot Surface Protection

Containerized Kitchen (CK)

- Fielding is currently focused on modular force requirements.
- Current figures for 2007 is 350 fielded with an acquisition objective of 742.

Containerized Kitchen P^{3}I - Thermal Fluid (CKTF)

- **Objective(s):**
  - ➔ Comprehensively address the pre-planned product improvements called for in the CK ORD
  - ➔ Eliminate the need for a separate field sanitation center and its associated transportation asset
  - ➔ Increase worker safety, comfort and effectiveness

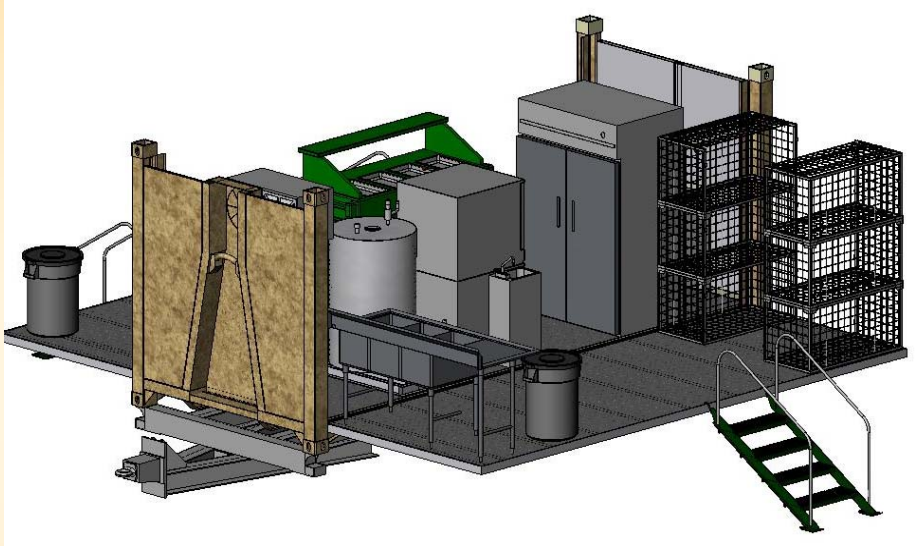

- **Capability Provided:**
  - ➔ HEMTT compatible container that provides greater field mobility
  - ➔ Commercial appliances provide greater user flexibility while maintaining capability to feed 800 warfighters, three meals/day
  - ➔ Integrated Food Sanitation Center on board, meets requirements of the FSC ORD

TFCK – Design Concept (serving side view)

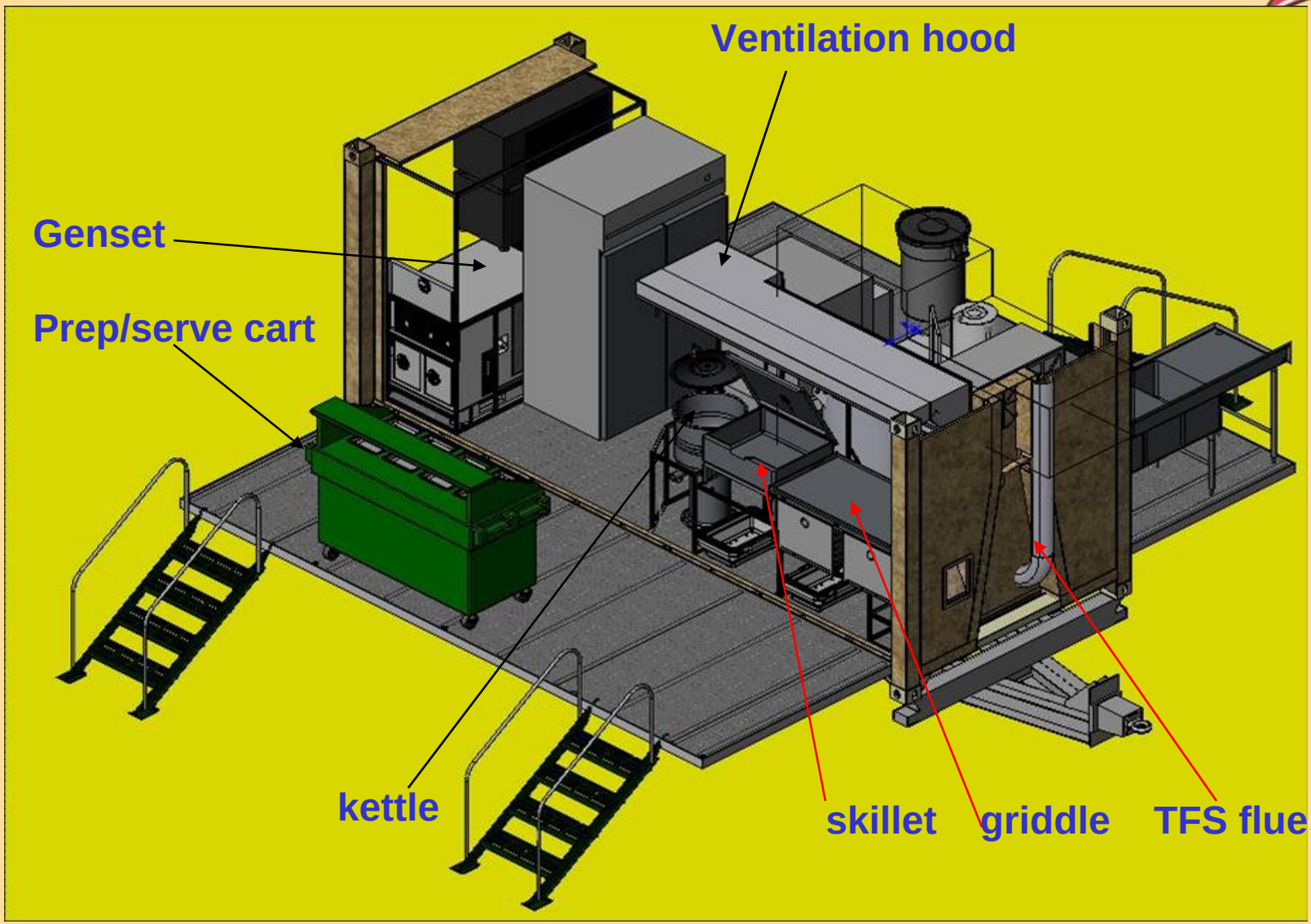

TFCK – Design Concept (sanitation side view)

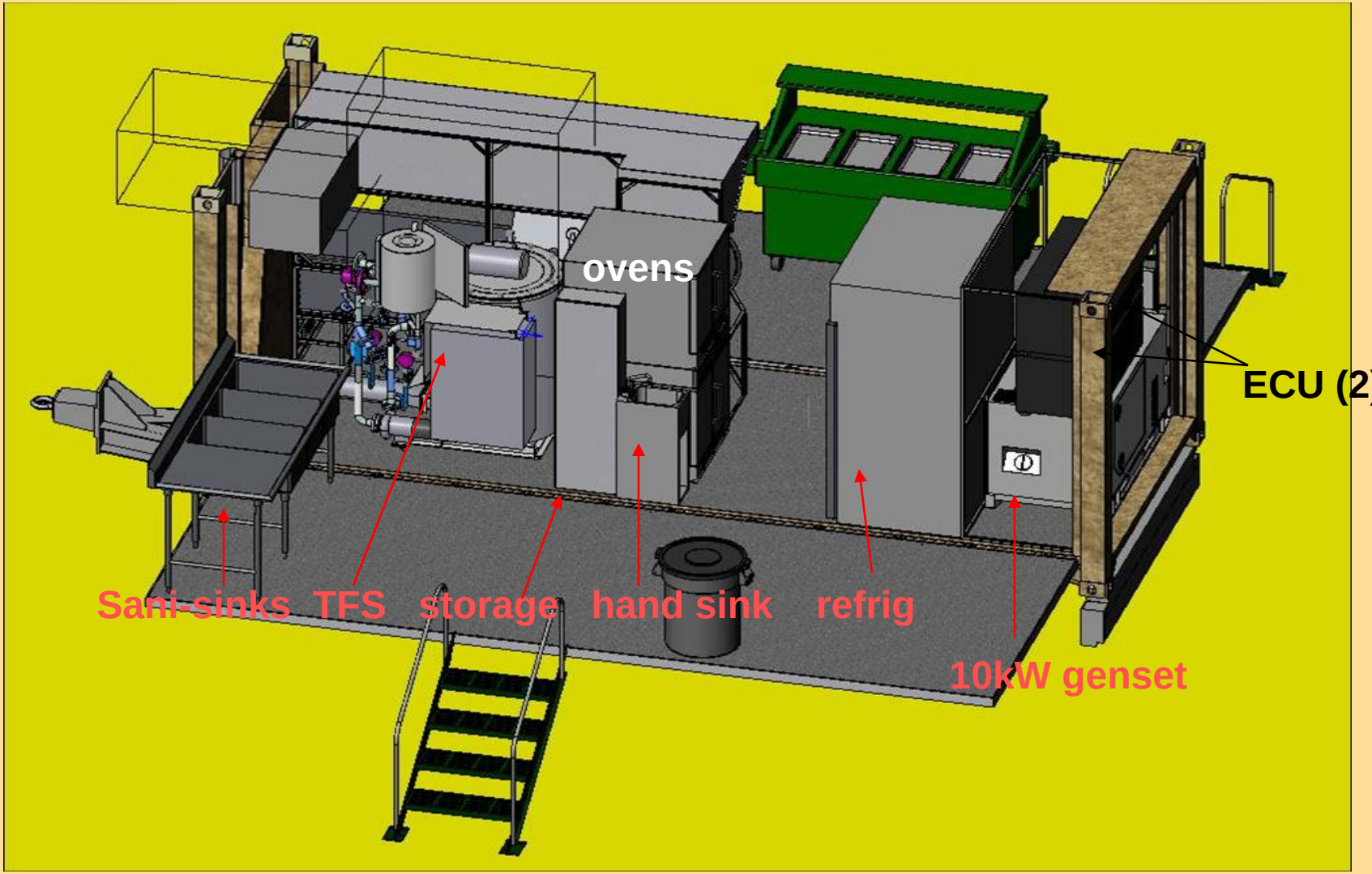

Containerized Kitchen P^{3}I - Thermal Fluid (CKTF)

- **ROI/Benefits:**
  - Elimination of 7 open flame combustion MBU with a single efficient, highly reliable, vented combustion, commercial heater
  - Provides a much safer, cooler and quieter work environment by venting combustion products and eliminating open flames
  - Elimination of FSC transportation asset, saves fuel, money and possibly lives
  - Thermal fluid cooking provides even, controlled heating and appliance flexibility resulting in superior rations
- **Applications/Deliverables:**
  - Short Term – Testable prototype that will be used to develop performance specification
  - Long Term – Class I ECP that will transition to production contract, replacing legacy CKs in future buys
- **Platform(s) Supported: Group**

CK P^{3}I (CKTF) Layout

Overhead view of kitchen layout

- Serving bays convert to cutting boards for food prep and passively store rations for server convenience
- Griddle and skillet both have actively heated ration storage compartments underneath the cooking surface
- TF – Thermal Fluid system. 625K BTU/hr commercial system provides instantaneous hot water and enough heat for the appliances, sanitation and workplace comfort

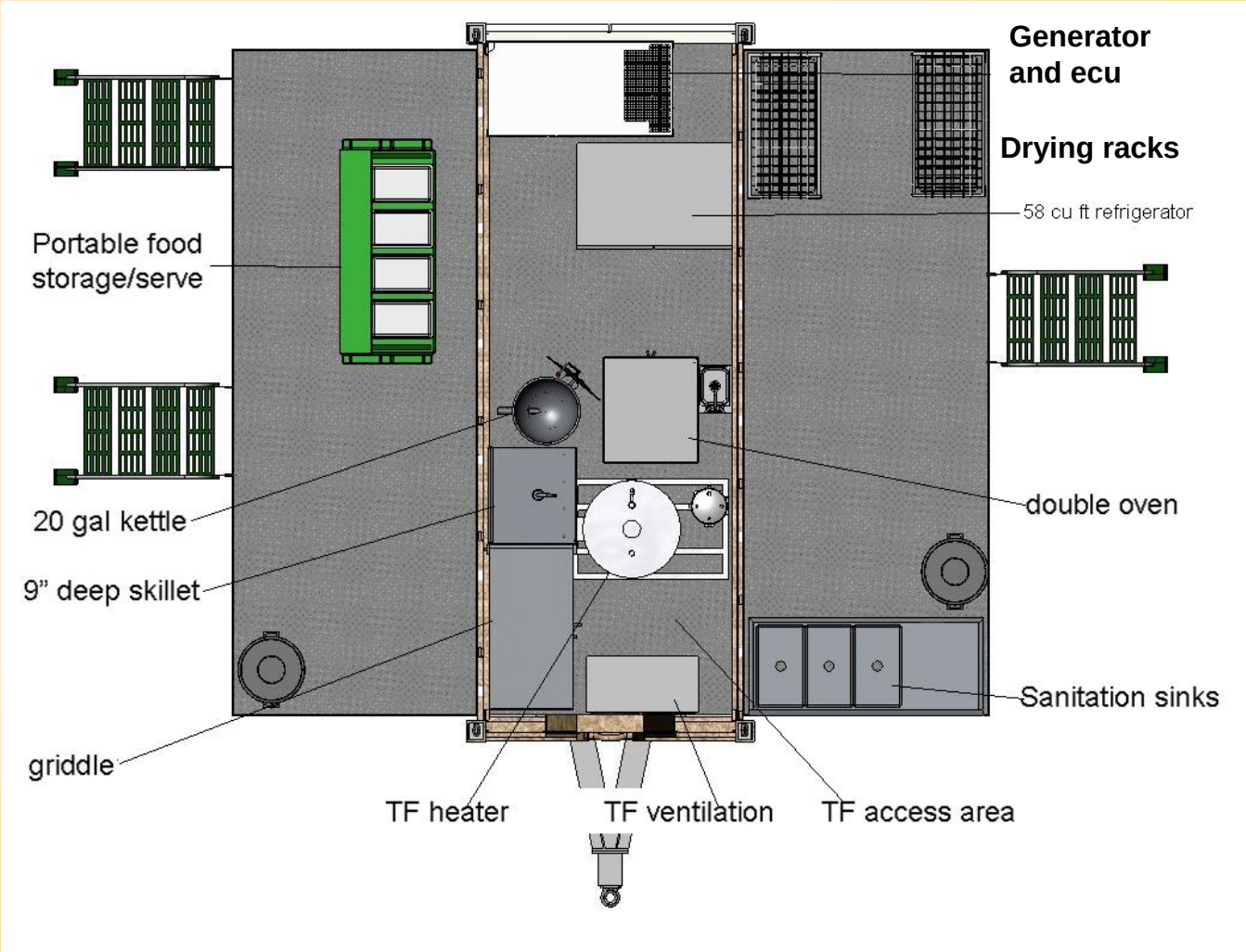

Containerized Kitchen P^3I - Thermal Fluid (CKTF)

- **FY07 Planned Accomplishments:**
  - ➔ Prototype assembly scheduled for completion in June, 2007
  - ➔ Initiate In-House performance testing consisting of drawing validation and capability testing
  - ➔ Informal Log Demo with ILSC to validate initial supportability strategy as well as operator and maintainer training documentation
  - ➔ Initiation of Production Qualification Testing in 4th Quarter FY07 at Aberdeen Proving Grounds

Multi Temperature Refrigerator Containerized System (MTRCS)

- **Objective:**
  - Develop a highly mobile multi-temperature partitioned refrigerated container system that provides simultaneous transport of frozen and chilled/semi-perishable rations on a single platform directly to the field kitchen site

- **Capability Provided:**
  - Multi-temperature product storage with two custom selectable/individually controlled compartments with setpoints ranging from -5°F/-20.6°C to 60°F/15.6°C
  - Operation on the move
  - Enable both military and commercial transportation.
  - Multi-powered operation

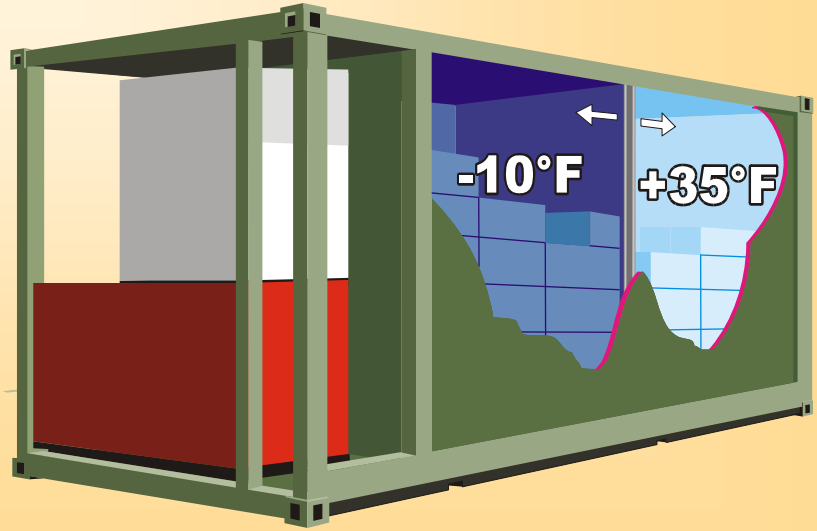

New Design

Assault Kitchen (AK)

Objective(s):

- Develop a lightweight, mobile field feeding platform to support the forward deployed Warfighter
- Functionally replace the Kitchen, Company Level Field Feeding (KCLFF)
- Reduce the field feeding logistical footprint

Capability Provided:

- Heat-on-the-move field feeding
- Near instantaneous feeding at remote site
- Reduced feeding site food preparation time

Assault Kitchen (AK)

- Benefits:
  - Same major components as USMC TRHS/AF SPEK (SEET)
  - Utilization of NDI and commercial components
  - Reduction in field feeding logistical footprint
  - Minimal manpower required for system operation
  - System meets Joint Service Requirements

Assault Kitchen (AK)

- **FY07 Planned Accomplishments**
  - MS-C (LRIP) approval (completed)
  - DSCP contract award for TRHS components (completed)
  - System components purchased (completed)
  - LRIP test items developed (ongoing)
  - Conduct Production Verification Testing (PVT) and Log Demo
- **Future Plans**
  - Evaluate Self Powered Tray Ration Heater
  - Determine configuration to accommodate A-ration capability

QUESTIONS ?

Facilities & Equipment Division Contacts

Goldie Bailey	DSN 687-3354 Comm. 804-734-3354
Wardell Carey	DSN 687-3450 Comm. 804-734-3450
Rodrick Piggott	DSN 687-3329 Comm. 804-734-3329
Ryan Mebane	DSN 687- 3122 Comm. 804-734-3122
Tracie Field	DSN 687-4718 Comm. 804-734-4718
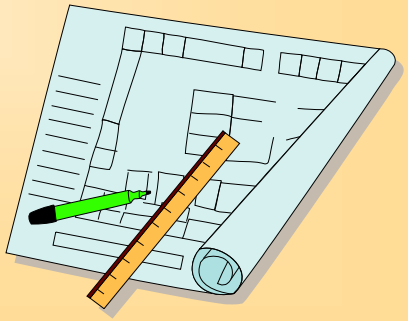
Please visit our web site @
www.quartermaster.army.mil/aces