Guide to Managing Occupational Exposure to Bloodborne Pathogens

DEPARTMENT OF THE ARMY
U. S. ARMY ENVIRONMENTAL HYGIENE AGENCY
ABERDEEN PROVING GROUND, MARYLAND 21010-5422

REPLY TO
ATTENTION OF

HSHB-MI-H

October 1992

USAEHA TECHNICAL GUIDE NO. 190
Guide to Managing Occupational Exposure to Bloodborne Pathogens

This technical guide was prepared to assist the exposure control officer, who provides guidance to exposure control personnel, in the development and implementation of a written exposure control plan (ECP) that:

- Eliminates or minimizes employee exposure to blood and other potentially infectious materials (OPIM)

- Meets the requirements of the Occupational Safety and Health Administration's (OSHA) standard for *Occupational Exposure to Bloodborne Pathogens* 29 CFR 1910.1030 (hereinafter referred to as "the standard"), published on December 6, 1991, and in effect since March 6, 1992

As the exposure control officer, you are responsible for informing employers how to:

- Protect employees from the health risks presented by exposure to blood and OPIM in the workplace

- Prepare the most protective and cost-effective exposure control plan possible by teaming with at least the following disciplines: preventive medicine (occupational health, industrial hygiene, environmental health/science), infection control, safety, and occupational health

- Inform all employees of, and avail employees to, training, methods for exposure control, and medical resources as they relate to occupational exposure to blood and OPIM

You must emphasize that managing occupational exposure to blood and OPIM is everyone's responsibility. All employees regardless of status must follow the standard, the ECP, and supervisors' instructions as they relate to the standard.

To assist in meeting these responsibilities, this technical guide provides you with six modules of information:

- **Module 1** - A detailed explanation of each element of the OSHA bloodborne pathogens (BBP) standard, including compliance and inspection information and compliance checklists.

- **Module 2** - A reprint of the standard in its entirety.

- **Module 3** - Viewgraphs on the requirements of the standard.

- **Module 4** - A list of addresses and phone numbers for sources of assistance in meeting the requirements of the standard.

- **Module 5** - Commonly asked legal questions about the requirements of the standard.

- **Module 6** - A consolidation of the checklists that appear throughout Module 1. The American Hospital Association (AHA) provided the basis for these checklists.

You may direct questions for additional technical guidance or assistance to the Healthcare Hazards Program at DSN 584-3040 or commercial (410) 671-3040, or on E-mail to hshbmih @aeha1.apgea.army.mil.

You may obtain additional copies of this technical guide by submitting a DA Form 17 (Requisition for Publications and Blank Forms) to:

Commander
U.S. Army Environmental Hygiene Agency
ATTN: HSHB-CI-OI
Aberdeen Proving Ground, Maryland 21010-5422
Fax: DSN 3665 or (410) 671-3665
E-mail: hshbcii @aeha1.apgea.army.mil

MODULE 1: EXPLANATION OF THE STANDARD

MODULE 2: THE STANDARD

MODULE 3: VIEWGRAPHS

MODULE 4: SOURCES OF ASSISTANCE

MODULE 5: QUESTIONS AND ANSWERS REGARDING THE STANDARD

MODULE 6: CHECKLISTS

MODULE 1:

EXPLANATION OF THE STANDARD

CONTENTS OF MODULE 1

	Page
Scope and Application	1-3
Element 1: EXPOSURE CONTROL	
Exposure Control Plan	1-8
Exposure Determination	1-11
Element 2: METHODS OF COMPLIANCE	
General (Universal Precautions)	1-17
Engineering and Work Practice Controls	1-20
Personal Protective Equipment	1-35
Housekeeping	1-48
Element 3: HIV AND HBV RESEARCH LABORATORIES AND PRODUCTION FACILITIES	1-64
Element 4: HEPATITIS B VACCINATION AND POST-EXPOSURE EVALUATION AND FOLLOW-UP	
General	1-84
Hepatitis B Vaccination	1-85
Post-Exposure Evaluation and Follow-up	1-90
Information Provided to the LHCP	1-102
LHCP's Written Opinion	1-103
Element 5: COMMUNICATION OF HAZARDS TO EMPLOYEES	
Labels and Signs	1-111
Information and Training	1-116
Element 6: RECORDKEEPING	
Medical Records	1-126
Training Records	1-128
The OSHA Compliance Inspection	1-135
Glossary	1-140

SCOPE AND APPLICATION

Scope and Application

The Standard

(a) *Scope and Application.* This section applies to all occupational exposure to blood or other potentially infectious materials as defined by paragraph (b) of this section.

Compliance

Since there is no population that is free of risk from human immunodeficiency virus (HIV) or hepatitis B virus (HBV) infection, any employee who has occupational exposure to blood or OPIM is included within the scope of the standard.

Listed below are a number of job classifications that may be associated with tasks that have occupational exposure to blood and OPIM, but the scope of the standard is not limited to employees in these jobs. The hazard of exposure to infectious materials affects employees in many types of employment and is not restricted to the healthcare industry. At the same time, employees in the following jobs are not automatically covered by the standard unless they have occupational exposure:

- Physicians, physician's assistants, nurses, nurse practitioners, and other healthcare employees in clinics, physicians' offices, and hospitals
- Employees of clinical and diagnostic laboratories
- Housekeepers in healthcare facilities
- Personnel in hospital or commercial laundries that service healthcare or public safety institutions
- Tissue bank personnel
- Employees in blood banks and plasma centers who collect, transport, and test blood
- Freestanding clinic employees (e.g., hemodialysis clinics, urgent care clinics, health maintenance organization (HMO) clinics, and family planning clinics)
- Employees in clinics in industrial, educational, and correctional facilities (e.g., those who collect blood and clean and dress wounds)
- Employees assigned to provide emergency first aid

- Dentists, dental hygienists, dental assistants, and dental laboratory technicians
- Staff of institutions for the developmentally disabled
- Hospice employees
- Home healthcare workers
- Staff of nursing homes and long-term care facilities
- Employees of funeral homes and mortuaries
- HIV and HBV research laboratory and production facility workers
- Employees handling regulated waste
- Medical equipment service and repair personnel
- Emergency medical technicians, paramedics, and other emergency medical service providers
- Firefighters, law enforcement personnel, and correctional officers

Tip—Several other job classifications are covered by the standard:

- Part-time, temporary, and healthcare workers known as "per diem" employees
- Employees trained in first aid and designated by the employer as responsible for rendering medical assistance as part of their job duties
- Employees in the maritime industry who have occupational exposure to blood or OPIM

Tip--Good Samaritan acts are not covered by the standard. These acts involve an employee coming to the aid of a fellow employee that results in an exposure to blood or OPIM.

ELEMENT 1:

EXPOSURE CONTROL

Exposure Control Plan

The Standard

(c) *Exposure control*—(1) *Exposure Control Plan.* (i) Each employer having an employee(s) with occupational exposure as defined by paragraph (b) of this section shall establish a written Exposure Control Plan designed to eliminate or minimize employee exposure.

Compliance

The exposure control plan (ECP) is a written program that sets forth policies and procedures to protect employees from occupational exposure to blood and OPIM.

Tip—The plan may be part of a larger document, such as the Infection Control Manual. However, in order for the plan to be accessible to employees:

- It must be a cohesive entity by itself

  or

- There must be a guiding document that states the overall policy goals and references the elements of existing separate policies that comprise the plan.

Incorporation of the ECP into a larger document will:

- Prevent policy/procedure duplication
- Allow for easy cross-referencing of the ECP subelements to specific infection control policies (e.g., universal precautions) or specific safety policies (e.g., labeling)
- Confirm the compatibility of policies and procedures

The ECP is a key provision of the standard because it requires the employer to identify:

- All employees with occupational exposure
- The procedure for evaluating exposure incidents
- The schedule for implementing all other provisions of the standard

(ii) The Exposure Control Plan shall contain at least the following elements:
(A) The exposure determination required by paragraph(c)(2).
(B) The schedule and method of implementation for paragraphs (d) Methods of Compliance, (e) HIV and HBV Research Laboratories and Production Facilities, (f) Hepatitis B Vaccination and Post-Exposure Evaluation and Follow-up, (g) Communication of Hazards to Employees, and (h) Recordkeeping, of this standard, and
(C) The procedure for the evaluation of circumstances surrounding exposure incidents as required by paragraph (f)(3)(i) of this standard.

ECP Requirements

The ECP must include:

- Exposure determination
- Schedule and method of implementation for the elements of the standard
- Procedure for exposure incident evaluation

Schedule and Method of Implementation

The schedule and method of implementation for the following elements of the standard, appropriate to the circumstances of the particular workplace, must be addressed in the ECP:

- Methods of Compliance
- HIV and HBV Research Laboratories and Production Facilities
- Hepatitis B Vaccination and Post-Exposure Evaluation and Follow-Up
- Communication of Hazards to Employees
- Recordkeeping

Tip–Small facilities may find it adequate to annotate a copy of the final standard–stating when and how the provisions of the standard were implemented.

Larger facilities could develop a broad facility-wide program incorporating provisions from the standard that apply to their workplaces.

Procedure for Exposure Incident Evaluation

The ECP must include the procedure for evaluating the circumstances surrounding exposure incidents, including:

- An evaluation of the policies and "failures of control" at the time of the exposure incident
- Engineering and work practice controls in place at the time of the incident
- Protective equipment or clothing used at the time of the incident

(iii) Each employer shall ensure that a copy of the Exposure Control Plan is accessible to employees in accordance with 29 CFR 1910.20(e).

The ECP must be:

- Available in a location accessible to *all* employees

> **Tip**--The location of the plan may be adapted to the circumstances of a particular workplace provided employees can access a copy at the workplace, during the workshift. If the plan is maintained solely on computer, employees must be trained to operate the computer and the computer must be accessible by employees during the workshift. A hard copy of the plan must be made available to employees within 15 working days of the request.

(iv) The Exposure Control Plan shall be reviewed and updated at least annually and whenever necessary to reflect new or modified tasks and procedures which affect occupational exposure and to reflect new or revised employee positions with occupational exposure.

(v) The Exposure Control Plan shall be made available to the Assistant Secretary and the Director upon request for examination and copying.

- Reviewed and updated at least annually and whenever necessary to reflect new or modified tasks and procedures that affect occupational exposure
- Made available to OSHA's Assistant Secretary of Labor and the Director of NIOSH, or their designated representatives

(2) *Exposure determination.* (i) Each employer who has an employee(s) with occupational exposure as defined by paragraph (b) of this section shall prepare an exposure determination. This exposure determination shall contain the following:

(A) A list of all job classifications in which all employees in those job classifications have occupational exposure:

(B) A list of job classifications in which some employees have occupational exposure. and

(C) A list of all tasks and procedures or groups of closely related task and procedures in which occupational exposure occurs and that are performed by employees in job classifications listed in accordance with the provisions of paragraph (c)(2)(i)(B) of this standard.

(ii) This exposure determination shall be made without regard to the use of personal protective equipment.

Exposure Determination

Employers must conduct exposure determinations to identify and document:

- Job classifications in which *all* employees have occupational exposure (see table 1)
- Job classifications with the tasks and procedures in which *some* employees have occupational exposure (see table 2)

Tip–The specific tasks and procedures, or groups of closely related tasks and procedures, that are associated with occupational exposure must be delineated when only some of the employees in a classification have occupational exposure. For example, only *some* of the employees in a hospital laundry room might be assigned the task of handling contaminated laundry, but *all* might have the same job title and classification.

The tasks and procedures that are grouped must be related. They must share a common activity such as vascular access procedures, handling of contaminated sharps, handling of deceased persons, and so on.

The exposure determination must be made without taking into consideration the use of personal protective equipment (PPE) or clothing.

Inspection

The OSHA compliance officer will review the written ECP to:

- Determine whether the plan is reviewed annually and updated to reflect significant modifications in tasks or procedures that may have resulted in occupational exposure

- Determine that the content of the plan includes:

  - Exposure determination

> **Tip**--If a job classification, task, or procedure is omitted from the job classification list, but all employees in the job who perform the task or procedure have been included in all other aspects of the plan (e.g., vaccinations, training, etc.), it will be considered an "other-than-serious" violation.
>
> An other-than-serious violation is one of two types of violations cited by OSHA after the hazard evaluation; the other type is a serious violation.
>
> A serious violation is rated based upon the severity of a hazard (high, medium, or low) *and* the probability of occurrence (greater or lesser).
>
> An other-than-serious violation is based upon probability of occurrence without considering the severity.

  - Schedule and method of implementation
  - Procedure for evaluating exposure incidents

The OSHA compliance officer will also ensure that the ECP is accessible to all employees.

Exposure Control Checklist

1. Does your ECP identify in writing:

   - All employees who have a reasonable likelihood of occupational exposure during the performance of their assigned duties without regard to the use of PPE? Yes__ No__

   - The schedule and procedures for implementing *all* the provisions of the standard? Yes__ No__

   - The method for evaluation of exposure incidents that includes appropriate corrective action to be taken? Yes__ No__

2. Have you established a mechanism for annual review and update of the ECP? Yes__ No__

3. Is the ECP accessible to all employees? Yes__ No__

4. Do your policies and procedures--which identify department head, manager, and staff responsibilities—comply with recommended practices? Yes__ No__

5. Do your policies and procedures include:

   - Employee responsibilities? Yes__ No__

   - Recommended practices? Yes__ No__

   - Compliance monitoring procedures? Yes__ No__

   - Noncompliance reporting and documenting procedures? Yes__ No__

   - Monitoring follow-up procedures? Yes__ No__

   - Actions taken for noncompliance? Yes__ No__

Table 1
Job Classifications in Which *All* Employees (Military or Civilian) Have Occupational Exposure to Blood or OPIM*

Assistant
- Autopsy
- Biological Services
- Field Medical
- Nursing
- Physician's

Biochemist

Biologist/Histologist

Clinical Chemist

Dental
- Assistant
- Dentist
- Hygienist
- Laboratory Specialist
- X-Ray Technician

Emergency Room Personnel

Enlisted Personnel (All 91 Series)

Medical Equipment Repairer

Medical Laboratory Specialist

Microbiologist

Midwife

Mortician

Nurse
- Practical
- Registered

Oral Surgeon

Pathologist

Patient Transporter

Phlebotomist

Physician

Radiologist

Students**

Surgeon

Technician
- Biological Laboratory
- Emergency Medical
- Medical
- Medical Instrument
- Medical/Surgical/Health
- Surgical
- X-Ray

Technologist
- Blood Bank
- Diagnostic Radiologic
- Medical

Veterinary Microbiologist

Veterinary Pathologist

Volunteers**

Worker
- Laboratory
- Laundry

* This list of job classifications in which ***all*** employees have occupational exposure is not exhaustive.

** Employers are *legally* bound by OSHA to protect exposed employees. However, employers should consider the *moral* issues and protect all exposed individuals who perform some function (voluntary, educational, etc.) in their facilities. Additionally, the SJA has determined that, "exposing personnel, including students and volunteers, to hazardous materials without providing every reasonable protection may be considered employer negligence," since "... the Government is always subject to liability for personal injury caused by the wrongful acts or omissions of Federal employees acting within the scope of employment."

Table 2
Job Classifications in Which *Some* Employees (Military or Civilian) Have Occupational Exposure to Blood or OPIM*

Job Classifications	Tasks
Child Care Givers	Administering first aid or CPR to children
Clinic Receptionist	Receiving and transporting laboratory specimens
Central Material Services (CMS) Personnel	Handling contaminated instruments
Dental Receptionist	Filling in for dental assistant
Engineering Personnel	Installing, repairing, moving, and removing systems and equipment (medical/surgical vacuum, BSCs, HEPA filters, ducting, etc.)
Firefighter/Rescue Worker	Making informed judgments at accident scenes, fires, or other unpredictable, dangerous, and life-threatening situations
Food Service Worker	Picking up trays after meals (improperly disposed needles are the primary means of exposure)
Housekeeper	Cleaning patient care areas and laboratories; collecting, transporting, storing, and disposing of regulated waste
Lab Medical Clerk	Receiving and transporting laboratory specimens
Lab Receptionist	Receiving and transporting laboratory specimens
Laundry Handler	Collecting, transporting, and processing soiled linen
Law Enforcer	Making an informed judgment at crime scenes and after fights and/or assaults to protect oneself since unusual circumstances or events arise
Optometrist	Examining ocular trauma patients
Recreation/Sports Specialist	Administering first aid to participants injured during sporting activities
Ward Clerk	Receiving and transporting laboratory specimens
Warehouse Worker	Handling packages containing unfixed tissues

* This list of job classifications in which ***some*** employees have occupational exposure is not exhaustive.

ELEMENT 2:

METHODS OF COMPLIANCE

General

The Standard

(d) *Methods of compliance*—(1) *General*—Universal precautions shall be observed to prevent contact with blood or other potentially infectious materials. Under circumstances in which differentiation between body fluid types is difficult or impossible, all body fluids shall be considered potentially infectious materials.

Compliance

Universal precautions is:

- A concept of infection control that requires all human blood and some OPIM to be treated as if they are infectious with HIV, HBV, or other BBP regardless of the perceived "low risk" of a patient or patient population
- OSHA's accepted method of control to protect employees from exposure to all human blood and OPIM

Universal precautions requires:

- Routine use of appropriate PPE (gloves, masks, protective eyewear, gowns, etc.)
- Immediate washing of hands and other skin surfaces if contaminated with blood or OPIM. Hands must also be washed immediately after glove removal.

Occupationally exposed employees must use universal precautions and must handle all blood and certain body fluids as infectious.

See table 3 for identified blood and other body fluids (referred to as OPIM) to which universal precautions applies.

Universal precautions also applies to:

- All body fluids in situations where it is difficult or impossible to differentiate between body fluid types
- Any unfixed tissue or organ other than intact skin from a human (living or dead)
- HIV-containing cell or tissue cultures, organ cultures, and HIV- or HBV-containing cultures or other solutions—as well as blood, organs, or other tissues—from experimental animals infected with HIV or HBV

Tip—An acceptable alternative method to universal precautions is called body substance isolation (BSI). BSI incorporates not only the fluids and materials covered by the standard, but expands coverage to include *all* body fluids and substances.

Inspection

The OSHA compliance officer will ensure that the employer does not have a policy of treating the blood or OPIM of some patients as potentially infectious and the blood or OPIM of others (e.g., the elderly or children) as noninfectious.

Table 3
Application of Universal Precautions to Blood and Body Fluids

Body Fluids to Which Universal Precautions Apply	Body Fluids to Which Universal Precautions May Not Apply*	Precautions for Other Body Fluids in Special Settings
blood	nasal secretions	human breast milk in settings such as breast milk banks
body fluids containing visible blood	sputum	
saliva in dental settings	sweat	
semen	tears	
vaginal secretions	urine	
tissues	vomitus	
cerebrospinal fluid	feces	
synovial fluid		
pleural fluid		
peritoneal fluid		
pericardial fluid		
amniotic fluid		

* Unless these body fluids contain visible blood and/or are encountered in situations where it is difficult or impossible to differentiate between body fluids.

Engineering and Work Practice Controls

The Standard

(2) *Engineering and work practice controls.* (i) Engineering and work practice controls shall be used to eliminate or minimize employee exposure. Where occupational exposure remains after institution of these controls, personal protective equipment shall also be used.

(ii) Engineering controls shall be examined and maintained or replaced on a regular schedule to ensure their effectiveness.

Compliance

The employer is required to institute engineering and work practice controls as the primary means of eliminating or minimizing employee exposure to blood or OPIM.

Engineering controls--such as sharps disposal containers, biosafety cabinets, and splash guards--isolate the employee from exposure to blood or OPIM or remove the hazard from the workplace. Table 4 provides a listing of some of the engineering controls used in several different work settings.

Work practice controls--such as prohibiting needle recapping by two hands--are specific procedures employees follow to reduce the likelihood of their exposure to blood or OPIM.

Engineering and work practice controls must be established to eliminate or minimize risk of exposure:

- From all sharps
- From splashing and spraying of blood or OPIM
- From ingestion, absorption, or inhalation of blood or OPIM
- By providing and properly using appropriate packaging for specimens and regulated wastes
- By decontaminating equipment or labeling it as contaminated prior to shipping

If occupational exposure remains after these controls are instituted, employees must use personal protective equipment (PPE).

The engineering and work practice controls are employed in four major areas:

- Personal hygiene
- Sharps management
- Infectious materials management
- Collection, handling, processing, storage, transport, and shipping of infectious materials and sharps

These controls must be examined and maintained or replaced on a regular schedule to ensure their effectiveness.

Tip—Regularly scheduled inspections are required to confirm, for instance, that:

- Protective shields have not been removed or broken
- Sharps disposal containers are being replaced at sufficiently frequent intervals to prevent overfilling
- Other physical, mechanical, or replacement-dependent controls are functioning as intended

(iii) Employers shall provide handwashing facilities which are readily accessible to employees.

(iv) When provision of handwashing facilities is not feasible, the employer shall provide either an appropriate antiseptic hand cleanser in conjunction with clean cloth/paper towels or antiseptic towelettes. When antiseptic hand cleansers or towelettes are used, hands shall be washed with soap and running water as soon as feasible.

(v) Employers shall ensure that employees wash their hands immediately or as soon as feasible after removal of gloves or other personal protective equipment.

(vi) Employers shall ensure that employees wash hands and any other skin with soap and water, or flush mucous membranes with water immediately or as soon as feasible following contact of such body areas with blood or other potentially infectious materials.

Personal Hygiene

Provide readily accessible handwashing facilities to all employees. Employees must wash their hands and any other skin with soap and water, or flush mucous membranes with water, immediately after:

- Contact with blood or OPIM
- Removal of gloves after each patient
- Removal of other PPE

If handwashing facilities are unavailable--as is the case with ambulance-based paramedics, emergency medical technicians, firefighters, and mobile blood collection personnel--employees may wipe their hands with a clean cloth or paper towel in conjunction with an antiseptic waterless hand cleanser or antiseptic towelette. However, employees must wash their hands with soap and water as soon as feasible.

Employees may use hand cream from individual, nonrefillable containers if they thoroughly wash their hands immediately before application. Employees should not use petroleum-based (vaseline) creams because they adversely affect glove integrity.

(vii) Contaminated needles and other contaminated sharps shall not be bent, recapped, or removed except as noted in paragraphs (d)(2)(vii)(A) and (d)(2)(vii)(B) below. Shearing or breaking of contaminated needles is prohibited.

(A) Contaminated needles and other contaminated sharps shall not be recapped or removed unless the employer can demonstrate that no alternative is feasible or that such action is required by a specific medical procedure.

(B) Such recapping or needle removal must be accomplished through the use of a mechanical device or a one-handed technique.

(viii) Immediately or as soon as possible after use, contaminated reusable sharps shall be placed in appropriate containers until properly reprocessed. These containers shall be:

(A) Puncture resistant;

(B) Labeled or color-coded in accordance with this standard;

(C) Leakproof on the sides and bottom; and

(D) In accordance with the requirements set forth in paragraph (d)(4)(ii)(E) for reusable sharps.

Sharps Management

Sharps not only includes needles and scalpels, but also include anything that might produce a puncture wound that would expose employees to blood or OPIM, such as the ends of contaminated orthodontia wires or broken glass.

Tip--It is preferable to use devices that offer an alternative to using needles to perform procedures. Examples of such devices include stopcocks (on-off switch), needle-protected systems, or needleless systems that can be used in place of open needles to connect intravenous lines. Other devices that are integral to the syringe, such as self-sheathing needles, allow both hands to remain behind the needle and require very little manipulation to isolate the needle safely.

Employees must not:

- Shear, break, or bend contaminated sharps
- Recap or remove contaminated sharps unless no alternative is feasible

Tip--Employees may recap needles using a one-hand scoop or mechanical device if there is no feasible alternative or the action is required by a specific medical procedure, such as administering multiple injections of local anesthesia.

Employees may remove a needle from a vacutainer sleeve by using the sharps container to unscrew the needle.

If a bent needle is required for injection technique or irrigation, it should be bent prior to initial use.

Immediately after use, employees must place contaminated reusable sharps into appropriate containers until properly reprocessed. These containers must be:

- Puncture resistant
- Labeled or color-coded
- Leakproof on both the sides and bottom
- Locked in place or maintained under direct observation to prevent misuse or access by unauthorized persons
- Filled only to 3/4 full
- Stored or processed so employees *do not reach by hand* into the containers to retrieve instruments

Tip--Since reusable sharps such as large bore needles, scalpels, and saws pose the same percutaneous exposure hazard as disposable sharps, they must be placed in containers to minimize their hazard until they are reprocessed.

Reusable sharps containers must meet the same requirements as disposable sharps containers with one exception--they are not required to be closable since the containers used for collecting and holding reusable sharps will, themselves, be reused.

To facilitate cleaning, reusable containers with rounded corners and joints are recommended.

Additional training is essential for personnel involved with handling nonclosing reusable sharps containers.

(ix) Eating, drinking, smoking, applying cosmetics or lip balm, and handling contact lenses are prohibited in work areas where there is a reasonable likelihood of occupational exposure.

(x) Food and drink shall not be kept in refrigerators, freezers, shelves, cabinets or on countertops or benchtops where blood or other potentially infectious materials are present.

In work areas where there is potential occupational exposure, employees must not:

- Eat
- Drink
- Smoke
- Apply cosmetics or lip balm
- Handle contact lenses

Although not specifically stated in the standard, employees *should not chew gum or use smokeless tobacco* in work areas where there is potential exposure.

Tip–The term "work area" means the area where there is work involving exposure or potential exposure to blood or OPIM, along with the potential contamination of surfaces. For example, employees are permitted to eat and drink in an ambulance cab if the employer has implemented procedures to:

- Permit employees to wash up and change contaminated clothing prior to entering the ambulance cab
- Ensure that patients and contaminated material remain behind the separating partition

Employees must not store food or beverages in refrigerators, freezers, or cabinets or on shelves, benchtops, or countertops where blood or OPIM are present.

Designate specific areas where employees may store and consume food or beverages.

(xi) All procedures involving blood or other potentially infectious materials shall be performed in such a manner as to minimize splashing, spraying, spattering, and generation of droplets of these substances.

Infectious Materials Management

Employees must:

- Perform all procedures involving the handling of blood or OPIM in a manner that minimizes splashing, spraying, spattering, and generation of droplets of these substances (this will not only decrease the chances of direct employee exposure, but will also reduce contamination of surfaces in the work area)

Tip–Surgical power tools, lasers, and electrocautery devices may generate aerosols. However, OSHA does not require the use of respiratory protection for exposure to aerosols.

(xii) Mouth pipetting/suctioning of blood or other potentially infectious materials is prohibited.

- Not pipette or suction blood or OPIM by mouth

Tip–OSHA allows a recognized emergency care method of clearing an infant's airways called "DeLee suctioning" in an emergency situation when no other method is available. However, a trap that prevents suctioned fluid from reaching the employee's mouth *must* be inserted in-line between the infant and the employee.

(xiii) Specimens of blood or other potentially infectious materials shall be placed in a container which prevents leakage during collection, handling, processing, storage, transport, or shipping.

(A) The container for storage, transport, or shipping shall be labeled or color-coded according to paragraph (g)(1)(i) and closed prior to being stored, transported, or shipped. When a facility utilizes Universal Precautions in the handling of all specimens, the labeling/color-coding of specimens is not necessary provided containers are recognizable as containing specimens. This exemption only applies while such specimens/containers remain within the facility. Labeling or color-coding in accordance with paragraph (g)(1)(i) is required when such specimens/containers leave the facility.

(B) If outside contamination of the primary container occurs, the primary container shall be placed within a second container which prevents leakage during handling, processing, storage, transport, or shipping and is labeled or color-coded according to the requirements of this standard.

(C) If the specimen could puncture the primary container, the primary container shall be placed within a secondary container which is puncture-resistant in addition to the above characteristics.

Collection, Handling, Processing, Storage, Transport, and Shipping of Infectious Materials and Sharps

Containers used for the collection, handling, processing, storage, transport, or shipping of blood or OPIM must be:

- Puncture resistant
- Leakproof
- Labeled or color-coded
- Closed

Requirements for the containerization and labeling of specimens:

- Eliminate or minimize possible inadvertent employee contact with blood or OPIM that has leaked out of the container and contaminated exterior surfaces of the container or surrounding surfaces.
- If the first container could be punctured by its contents, it must be placed in a second container that is puncture resistant.
- Warn employees through labeling or color coding that blood or OPIM are present so that proper handling precautions can be taken.

Tip--Extracted teeth are subject to the containerization and labeling provisions of the standard.

If the outside of the first container is contaminated, it must be placed within a second container that is leakproof and labeled or color-coded.

Tip--Facilities that handle all specimens with universal precautions are exempt from the labeling/color-coding requirement, provided that containers are recognizable as containing specimens. This exemption applies:

- Only while the specimens remain within the facility (specimens leaving the facility require a label or red color-coding)
- If all employees who have contact with the specimens have been trained to handle all specimens with universal precautions

Tip—Laboratory specimens and other more fragile items are transported in some hospitals by pneumatic tube systems. The primary concern in the transport of clinical specimens is leakage into the carrier or the system tubing. Breakage as a cause of leakage can be virtually eliminated by using padded inserts for the carriers and soft delivery of the carrier. Leakage can be minimized by the use of proper packaging and/or the use of primary containers that prevent leakage during transport. Also, ensure the carrier adequately seals to prevent leakage.

All employees who might open a carrier must:

- Be trained to regard the contents as biohazardous in nature
- Wear gloves when removing specimens from the tube system carrier
- Be trained in decontamination of the carrier

(xiv) Equipment which may become contaminated with blood or other potentially infectious materials shall be examined prior to servicing or shipping and shall be decontaminated as necessary, unless the employer can demonstrate that decontamination of such equipment or portions of such equipment is not feasible.

(A) A readily observable label in accordance with paragraph (g)(1)(i)(H) shall be attached to the equipment stating which portions remain contaminated.

(B) The employer shall ensure that this information is conveyed to all affected employees, the servicing representative, and/or the manufacturer, as appropriate, prior to handling, servicing, or shipping so that appropriate precautions will be taken.

Any potentially contaminated equipment must be examined before maintenance, repair, or shipping. If feasible, the equipment must be decontaminated. If not, the equipment must be labeled stating which portions remain contaminated. Ensure all employees are informed of the contamination so appropriate handling precautions are taken.

Tip—When it is not possible to decontaminate equipment prior to servicing or shipping—for example, highly technical or sensitive equipment and/or limited access to contaminated parts—at least partial decontamination, such as flushing lines and wiping the exterior, must be performed.

Inspection

The OSHA compliance officer will:

- Determine through interviews or observation of work involving the use of needles whether proper engineering and work practice controls are used, such as immediate disposal of used needles into a sharps container

- Evaluate the employees' work practices to determine if they ensure the effectiveness of engineering controls

> **Tip**—For example, some devices provide a fixed barrier between the hands and the needle after use. Only some finger/hand shields offer full protection of the hand holding the needle sheath from accidental puncture. They may leave much of the hand area uncovered and are not considered acceptable protection for use in a two-handed recapping procedure. Both the shield and the cap must be constructed so that an employee is not exposed to puncture from the side or end of the cap.

- Determine if employees failed to use engineering and work practice controls due to inadequate training

> **Tip**—Employers do not automatically have to institute the most sophisticated engineering controls (e.g., needleless IV connectors and self-sheathing needles). However, it is the employer's responsibility to evaluate the effectiveness of existing controls and to review the feasibility of instituting more advanced engineering controls. The provision for instituting engineering controls should be made without regard to cost.

- Determine if there is a system for regular examination, repair, and/or replacement of the engineering controls

Tip–The OSHA compliance officer will issue a citation if an effective monitoring system would have uncovered a deficiency. Examples include the biosafety cabinet is not functional, filters are overloaded (in research laboratories or production facilities), or a hematron splash shield is broken or missing.

Additionally, if there is unprotected employee exposure, a citation will be issued for failure to use PPE after instituting engineering controls.

- Review handwashing requirements:
  - Are required handwashing facilities being provided at a reasonable distance from their normal work area?
  - If not, are required alternatives provided?
  - Are employees washing their hands after exposure and after glove removal?
- Determine if cleaning procedures unnecessarily cause splashing, spraying, spattering, or generation of droplets of blood or OPIM
- Observe or document work practices to determine whether a secondary specimen container is being used when necessary
- Ensure that the employer's program makes provision for the required equipment labels
- Observe or document work practices used when decontaminating equipment

Engineering and Work Practice Controls Checklist

1. Are handwashing facilities--with soap, warm running water, and paper towels--reasonably accessible to employees? Yes__ No__

2. If handwashing facilities are not accessible, are appropriate alternatives provided such as antiseptic hand cleaners in conjunction with a clean cloth or paper towel or antiseptic towelettes? Yes__ No__

3. Do you evaluate safe needle devices for their appropriateness and efficacy? Yes__ No__

   - After efficacy is established, do you make these devices available to employees? Yes__ No__
   - Do you train employees to properly use these devices? Yes__ No__

4. Do you have written policies that:

   - Prohibit recapping needles using a two-handed technique? Yes__ No__
   - Prohibit removing uncapped needles from syringes by hand? Yes__ No__
   - Prohibit bending, shearing, or breaking contaminated sharps? Yes__ No__
   - Specify situations where recapping is allowed and safe practices or devices are required to reduce the risk of a needlestick? Yes__ No__
   - Specify the safe practices to use when handling or reprocessing reusable sharps? Yes__ No__
   - Require the use of mechanical means (e.g., dust pan and brush) to clean up broken glass? Yes__ No__

5. Do you have a schedule and method for determining the need for replacing sharps containers? Yes__ No__

6. Are the containers used to **store** or **transport** contaminated reusable sharps:

- Puncture resistant and leakproof? Yes__ No__
- Red in color or labeled with the biohazard symbol? Yes__ No__

7. Are the containers used for **disposing** of contaminated sharps:

- Closable, puncture resistant, and leakproof on sides and bottom? Yes__ No__
- Red in color or labeled with the biohazard symbol? Yes__ No__
- Located as close as feasible to the area of use? Yes__ No__
- Also located in areas where sharps are not normally used, but can be reasonably anticipated to be found, such as the laundry? Yes__ No__
- Replaced when no more than 3/4 full? Yes__ No__
- Maintained in an upright position during transport? Yes__ No__

8. In contaminated work areas, are employees instructed not to:

- Eat or drink? Yes__ No__
- Smoke? Yes__ No__
- Apply cosmetics or lip balm? Yes__ No__
- Handle contact lenses? Yes__ No__
- Chew gum? Yes__ No__
- Use smokeless tobacco Yes__ No__

9. Is training provided to employees so that they:

- Perform procedures, which may create splashing or spraying of blood or OPIM, in a manner that reduces risk of exposure? Yes__ No__

- Recognize specimen containers as containing potentially infectious materials? Yes__ No__

- Use universal precautions when handling all specimens? Yes__ No__

10. Are containers that are used to transport specimens appropriately labeled? Yes__ No__

11. Are employees instructed to place all potentially contaminated or leaking specimen containers in a secondary container that is leakproof, puncture resistant, and labeled? Yes__ No__

12. Are appropriate sized secondary containers:

- Available? Yes__ No__

- Used when needed? Yes__ No__

13. Is contaminated equipment decontaminated prior to servicing? Yes__ No__

14. If decontamination is not possible, is the equipment labeled and does it specify which portions of the equipment remain contaminated? Yes__ No__

Table 4
Engineering Controls for Certain Work Settings

Healthcare	Research and Production Labs	Emergency Response
Self-sheathing needles	Biosafety cabinets	Disposable airway equipment
Needleless vascular access systems	Centrifuge safety cups	Resuscitation bags and mechanical respiratory assistance devices (e.g., oxygen demand valve resuscitators)
Special containers for contaminated sharps	Sealed centrifuge rotors	Pocket mouth-to-mouth resuscitation devices
Instrument retrieval mechanical devices	Containment caging for animals	
Puncture-resistant and leakproof specimen containers	Splash guards	
High-speed evacuators		

Personal Protective Equipment

The Standard

(B) The employer shall ensure that this information is conveyed to all affected employees, the servicing representative, and/or the manufacturer, as appropriate, prior to handling, servicing, or shipping so that appropriate precautions will be taken.

(3) Personal protective equipment—(i) Provision. When there is occupational exposure, the employer shall provide, at no cost to the employee, appropriate personal protective equipment such as, but not limited to, gloves, gowns, laboratory coats, face shields or masks and eye protection, and mouthpieces, resuscitation bags, pocket masks, or other ventilation devices. Personal protective equipment will be considered "appropriate" only if it does not permit blood or other potentially infectious materials to pass through to or reach the employee's work clothes, street clothes, undergarments, skin, eyes, mouth, or other mucous membranes under normal conditions of use and for the duration of time which the protective equipment will be used.

Compliance

Provision

PPE must be provided and properly worn and used to prevent blood or OPIM from passing through to or contacting the employees' work or street clothes, undergarments, skin, eyes, mouths, or other mucous membranes unless engineering controls and work practices have eliminated occupational exposure.

Provide, at no cost to the employee, and require all occupationally exposed employees to use and wear PPE such as:

- Gloves
- Gowns
- Laboratory coats
- Face shields
- Masks
- Eye protection
- Head covers and shoe covers
- Mouthpieces
- Resuscitation bags
- Pocket masks
- Other ventilation devices

Tip–Scrubs are usually worn as a substitution for street clothes and duty uniforms in certain settings (e.g., OR suite) and should be covered by appropriate gowns, aprons, or laboratory coats when splashes to skin or clothing are anticipated.

If a pullover scrub becomes contaminated, employees should be trained to remove the pullover scrub in such a way as to avoid contact with the outer surface (e.g., rolling up the garment as it is pulled toward the head for removal).

However, if the amount of blood exposure is such that the blood penetrates the scrub and contaminates the inner surface, not only is it impossible to remove the scrub without exposure to blood, but the penetration itself would constitute exposure. It may be prudent to train employees to cut such a contaminated scrub to aid removal and prevent exposure to the face.

(ii) Use. The employer shall ensure that the employee uses appropriate personal protective equipment unless the employer shows that the employee temporarily and briefly declined to use personal protective equipment when, under rare and extraordinary circumstances, it was the employee's professional judgment that in the specific instance its use would have prevented the delivery of health care or public safety services or would have posed an increased hazard to the safety of the worker or co-worker. When the employee makes this judgement, the circumstances shall be investigated and documented in order to determine whether changes can be instituted to prevent such occurences in the future.

Use

Ensure employees use and wear appropriate PPE except when an employee temporarily and briefly declines based on situations in which use of PPE would prevent the proper delivery of healthcare or public safety services, or would pose an increased hazard to the personal safety of the worker, such as:

- A sudden change in patient status occurs such as when an apparently stable patient unexpectedly begins to hemorrhage profusely, putting the patient's life in immediate jeopardy.
- A firefighter rescues an individual who is not breathing from a burning building and discovers that his resuscitation equipment is damaged or lost and he must administer CPR.
- A police officer is attacked by a bleeding suspect or a suspect is wielding a knife.

Document why PPE was not used in each case and evaluate the circumstances surrounding the incident to reduce the likelihood of a future unprotected incident.

(iii) Accessibility. The employer shall ensure that appropriate personal protective equipment in the appropriate sizes is readily accessible at the worksite or is issued to employees. Hypoallergenic gloves, glove liners, powderless gloves, or other similar alternatives shall be readily accessible to those employees who are allergic to the gloves normally provided.

Accessibility

All PPE must be readily accessible and:

- Appropriate to the specific task or procedure performed
- The correct size for the employee's proper use

If an employee is allergic to the gloves normally provided, other similar alternatives such as hypoallergenic gloves, glove liners, or powderless gloves must be readily accessible.

> **Tip**—The clothing of paramedics out on an emergency call may become blood-soaked. If they are unable to change before the next emergency call because a second set of clothing is located at the ambulance's home base, a violation of the standard would exist.

(iv) Cleaning, Laundering, and Disposal. The employer shall clean, launder, and dispose of personal protective equipment required by paragraphs (d) and (e) of this standard, at no cost to the employee.

(v) Repair and Replacement. The employer shall repair or replace personal protective equipment as needed to maintain its effectiveness, at no cost to the employee.

(vi) If a garment(s) is penetrated by blood or other potentially infectious materials, the garment(s) shall be removed immediately or as soon as feasible.

(vii) All personal protective equipment shall be removed prior to leaving the work area.

(viii) When personal protective equipment is removed it shall be placed in an appropriately designated area or container for storage, washing, decontamination or disposal.

Cleaning, Laundering, and Disposal

The employer must not only provide PPE, but clean, launder, and/or dispose of it at no cost to the employee.

Repair and Replacement

Repair or replace PPE as needed to maintain its effectiveness, at no cost to the employee.

While many employees have traditionally laundered their own uniforms, laboratory coats, or the like, if the item's intended function is to act as PPE, it is the employer's responsibility to launder it so that:

- Proper handling and laundering procedures are followed.
- There is no migration of contaminants to the home.

If the PPE is penetrated by blood or OPIM, it must be removed immediately or as soon as feasible.

Employees must remove all PPE before leaving their work areas...

> **Tip**--Employees are not required to change PPE when traveling from one hospital laboratory area to another, except where surface contamination may occur during their movement (e.g., using a telephone within the lab).
>
> Employees are *required* to change PPE when traveling outside the work area. For example, if an employee wearing contaminated gloves *exits* from a pathology laboratory to use a public telephone located in a public hallway of the hospital, it can be reasonably anticipated that another employee, without the benefit of gloves, could use the phone and become contaminated.

Once removed, the PPE must be placed in an appropriately designated container for storage, washing, decontamination, or disposal by the employer at no cost to the employee.

Gloves

(ix) Gloves. Gloves shall be worn when it can be reasonably anticipated that the employee may have hand contact with blood, other potentially infectious materials, mucous membranes, and non-intact skin; when performing vascular access procedures except as specified in paragraph (d)(3)(ix)(D); and when handling or touching contaminated items or surfaces.

(A) Disposable (single use) gloves such as surgical or examination gloves, shall be replaced as soon as practical when contaminated or as soon as feasible if they are torn, punctured, or when their ability to function as a barrier is compromised.

(B) Disposable (single use) gloves shall not be washed or decontaminated for re-use.

(C) Utility gloves may be decontaminated for re-use if the integrity of the glove is not compromised. However, they must be discarded if they are cracked, peeling, torn, punctured, or exhibit other signs of deterioration or when their ability to function as a barrier is compromised.

Gloves provide a barrier to blood and OPIM, but neither vinyl nor latex procedure gloves are completely impermeable. Handwashing is required after glove removal.

Employees must wear gloves when they anticipate:

- Contacting blood or OPIM or mucous membranes
- Handling or touching contaminated items or surfaces
- Performing invasive procedures
- Examining abraded or nonintact skin
- Rendering emergency medical or nonmedical assistance to individuals sustaining traumatic injury

(D) If an employer in a volunteer blood donation center judges that routine gloving for all phlebotomies is not necessary then the employer shall:
(1) Periodically reevaluate this policy;
(2) Make gloves available to all employees who wish to use them for phlebotomy;
(3) Not discourage the use of gloves for phlebotomy; and
(4) Require that gloves be used for phlebotomy in the following circumstances:
(i) When the employee has cuts, scratches, or other breaks in his or her skin;
(ii) When the employee judges that hand contamination with blood may occur, for example, when performing phlebotomy on an uncooperative source individual; and
(iii) When the employee is receiving training in phlebotomy.

There are two kinds of gloves used by employees: disposable and reusable. Disposable gloves must be replaced once used, contaminated, torn, or punctured. They must never be washed or decontaminated for reuse.

Reusable gloves may be decontaminated for re-use if the effectiveness of the glove as a barrier against potentially infectious materials is not compromised. However, reusable gloves must be discarded if they are cracked, peeling, torn, punctured, or show any other signs of deterioration.

Tip–Certain solutions, such as iodine, may cause discoloration of gloves without affecting their integrity and function.

Instruct employees not to touch telephones, computer keyboards, charts, elevator buttons, or other noncontaminated surfaces with gloved hands or used gloves.

It is not necessary for employees to wear gloves for all phlebotomies in volunteer blood donation centers. (This does not apply to phlebotomies conducted in other settings such as plasmapheresis centers or hospitals). However:

- Periodically reevaluate the policy
- Make gloves available to all employees who wish to use them
- Do not discourage the use of gloves
- Require the use of gloves when:
  - the employee has cuts, scratches, or others breaks in his or her skin
  - hand contamination with blood may occur (e.g., drawing blood from an uncooperative person)
  - the employee is receiving training in phlebotomy

Tip--Gloves are not required to be worn when giving injections unless contact with blood or OPIM is reasonably anticipated.

(x) Masks, Eye Protection, and Face Shields. Masks in combination with eye protection devices, such as goggles or glasses with solid side shields, or chin-length face shields, shall be worn whenever splashes, spray, spatter, or droplets of blood or other potentially infectious materials may be generated and eye, nose, or mouth contamination can be reasonably anticipated.

Masks, Eye Protection, and Face Shields

Employees' mucous membranes of the face and upper respiratory tracts must be protected from droplet spattering.

When eye, nose, or mouth contamination is anticipated, employees must wear face and eye protection--such as goggles, glasses with solid side shields, masks, and chin-length face shields--to protect them from splashes, sprays, spatters, and aerosolized droplets of potentially infectious materials.

Employers do not necessarily have to provide prescription eyewear for employees. You could provide and mandate the use of side shields, goggles, and/or protective face shields, and provide proper training in decontamination procedures.

Tip--During microsurgery, when it is not reasonably anticipated that there would be any spattering, the surgeon who is observing surgery through a microscope need not wear other eye protection.

(xi) Gowns, Aprons, and Other Protective Body Clothing. Appropriate protective clothing such as, but not limited to, gowns, aprons, lab coats, clinic jackets, or similar outer garments shall be worn in occupational exposure situations. The type and characteristics will depend upon the task and degree of exposure anticipated.

(xii) Surgical caps or hoods and/or shoe covers or boots shall be worn in instances when gross contamination can reasonably be anticipated (e.g., autopsies, orthopaedic surgery).

Protective Body Clothing

Depending upon the task and the degree of anticipated exposure, employees must wear protective clothing such as gowns, aprons, lab coats, and clinic jackets. For example, lab coats or gowns with long sleeves must be used for procedures in which exposure of the forearm to blood or OPIM is reasonably anticipated.

Head and Foot Coverings

When gross contamination is anticipated--such as in the performance of autopsies or orthopedic surgery—employees must wear surgical caps or hoods and shoe covers or boots.

Selection and Maintenance

See table 5 for assistance in selecting the appropriate PPE for employees. For answers to specific questions regarding selection, use, and maintenance, contact the respective PPE manufacturers.

Inspection

The OSHA compliance officer will verify that employees have been adequately trained in the proper use/wear of PPE and are, in fact, using/wearing PPE properly:

- Improper use of emergency ventilation devices--masks, mouthpieces, resuscitation bags, and shields/overlay barriers--includes failure to follow the manufacturer's instructions and/or accepted medical practice.

- Improper use of PPE includes wearing PPE that is inappropriate for the specific job/task (for example, wearing a laboratory coat when a rubber apron is needed) or wearing PPE that doesn't fit.

The OSHA compliance officer will verify PPE is provided in appropriate sites and accessible locations.

To determine if the appropriate PPE has been selected, the OSHA compliance officer will evaluate the tasks being performed and the degree of anticipated exposure by:

- Direct observation

- Employee interview

- Review of written SOP

Further, the OSHA compliance officer will verify that:

- PPE is provided at no cost to the employee

- PPE is cleaned/laundered/disposed of by the employer at no cost to the employee

- PPE is repaired and/or replaced at no cost to the employee

- PPE is removed when penetrated by blood or OPIM

- Employees at volunteer donor blood collection centers have received the training necessary to make an informed decision on the wearing of gloves

Personal Protective Equipment Checklist

1. Have you reviewed job duties with occupational exposure to determine the appropriate PPE? Yes__ No__

2. Have you provided PPE to the employees that is:

   - Appropriate to the task performed? Yes__ No__
   - Effective in preventing the penetration of blood or OPIM? Yes__ No__
   - Free of charge? Yes__ No__
   - Accessible and conveniently located? Yes__ No__
   - Available in proper sizes? Yes__ No__

3. Do you have a mechanism in place for:

   - Cleaning, laundering, or disposing of employees' PPE? Yes__ No__
   - Replacing or washing employer-provided uniforms if they are contaminated? Yes__ No__
   - Repairing, replacing, or reprocessing protective barriers and clothing? Yes__ No__

4. Does employee training include PPE:

   - Selection? Yes__ No__
   - Proper use? Yes__ No__
   - Replacement? Yes__ No__
   - Disposal? Yes__ No__

5. Does employee training also include the need to remove protective clothing and proper removal procedures:

   - Prior to leaving the work area? Yes__ No__
   - When it is penetrated by blood or OPIM? Yes__ No__

6. Do you provide gloves to the employees:

- In accessible locations? Yes__ No__
- Suitable for the tasks performed? Yes__ No__

7. Do you require wearing gloves:

- When there is reasonable likelihood of contact with blood or OPIM? Yes__ No__
- During all vascular access procedures? Yes__ No__
- When there is contact with mucous membranes and nonintact skin? Yes__ No__
- When contaminated items or surfaces are handled? Yes__ No__

8. Are alternative types of gloves provided for employees who are allergic to the standard hospital-style latex gloves? Yes__ No__

9. Do the written procedures prohibit the reuse of disposable gloves? Yes__ No__

10. Regarding reusable gloves, do the written procedures specify:

- Methods for decontamination? Yes__ No__
- Indications for replacement? Yes__ No__
- Length of use? Yes__ No__

11. Do you provide solid face and eye protection when there is a potential for splashing, spraying, or spattering of blood or OPIM? Yes__ No__

12. Have you provided side shields for protective eyewear? Yes__ No__

13. Are emergency ventilation devices available for use in emergency resuscitation? Yes__ No__

Table 5
PPE for Specific Circumstances

This table provides the minimum requirements during controlled situations to protect the employee from potentially infectious agents. This list is not exhaustive; judgment is required on the part of the employee to assess the need for additional barrier protection in less controlled situations.

Key: R = Routinely; S = If soiling likely; SP = If spattering/splashing likely

Tasks/Procedures	Gloves*	Cover	Mask	Eyewear
Injections				
Physical examinations (measuring blood pressure, etc.)				
Drawing blood (except for *all* phlebotomies in volunteer blood donation centers)	R			
Finger or heel sticks (from uncooperative patients)	R			
Examinations of mouth, rectum, genitalia	R			SP
During invasive procedures	R			SP
Handling and processing blood and body fluid specimens	R			SP
Examination of nonintact skin or patients with active bleeding	R			SP
Decontaminating procedures	R			SP
Handling and cleaning contaminated instruments and equipment	R (REUSABLE)			SP

Tasks/Procedures	Gloves*	Cover	Mask	Eyewear
Emptying wastebaskets, regulated waste containers, and any other waste handling activities	R			
Surface/equipment cleaning	R			
Resuscitation	R and plastic mouthpieces			
Dressing change, large amount of drainage	R	S (apron)		
Ostomy change, teaching, and irrigation	R	S (apron)		
Wound, irrigation	R	S (apron)	SP	SP
Emergency childbirth	R	G (gown)	SP	SP
Changing the bed of an incontinent patient	R	R (gown)		
Lifting or moving a patient with draining wounds	R	R (gown)		
Cleaning HIV and HBV research and production facilities	R	S (apron) R (shoe)	R	SP
Cleaning soiled beds	R	S (apron)		
Dental lab - incoming and outgoing case disinfection processing	R	R (lab coat)		
Dental lab - production area	R	R (lab coat)	R	R (safety glasses--appropriate for the ballistic hazard associated with grinding)

Tasks/Procedures	Gloves*	Cover	Mask	Eyewear
Certain surgical and invasive procedures	R	R (gown)	R	R
Endotracheal suctioning	R	S (gown)	R	R
Surgical procedures	R	R (gown) R (shoe) R (head)	R	R
Dental procedures (including surgery)	R	R (gown)	R	R (face shield)
GI endoscopy	R	R (gown)	R	R

* If an employee has an open cut or abrasion on their hands, gloves must be worn during all listed tasks/procedures.

Housekeeping

The Standard

(4) *Housekeeping.* (i) General. Employers shall ensure that the worksite is maintained in a clean and sanitary condition. The employer shall determine and implement an appropriate written schedule for cleaning and method of decontamination based upon the location within the facility, type of surface to be cleaned, type of soil present, and tasks or procedures being performed in the area.

(ii) All equipment and environmental and working surfaces shall be cleaned and decontaminated after contact with blood or other potentially infectious materials.

(A) Contaminated work surfaces shall be decontaminated with an appropriate disinfectant after completion of procedures; immediately or as soon as feasible when surfaces are overtly contaminated or after any spill of blood or other potentially infectious materials; and at the end of the work shift if the surface may have become contaminated since the last cleaning.

(B) Protective coverings, such as plastic wrap, aluminum foil, or imperviously-backed absorbent paper used to cover equipment and environmental surfaces, shall be removed and replaced as soon as feasible when they become overtly contaminated or at the end of the workshift if they may have become contaminated during the shift.

(C) All bins, pails, cans, and similar receptacles intended for reuse which have a reasonable likelihood for becoming contaminated with blood or other potentially infectious materials shall be inspected and decontaminated on a regularly scheduled basis and cleaned and decontaminated immediately or as soon as feasible upon visible contamination.

(D) Broken glassware which may be contaminated shall not be picked up directly with the hands. It shall be cleaned up using mechanical means, such as a brush and dust pan, tongs, or forceps.

(E) Reusable sharps that are contaminated with blood or other potentially infectious materials shall not be stored or processed in a manner that requires employees to reach by hand into the containers where these sharps have been placed.

Compliance

Worksites must be maintained in clean and sanitary conditions. A "worksite" refers not only to permanent fixed facilities such as hospitals, dental/medical offices, clinics, etc., but also covers temporary nonfixed workplaces such as ambulances, bloodmobiles, temporary blood collection centers, and any other nonfixed worksites that have a reasonable possibility of becoming contaminated with blood or OPIM.

Develop and implement written schedules and methods for cleaning and decontaminating environmental surfaces, work surfaces, and equipment based on the:

- Location within the facility (e.g., surgical operatory versus patient room versus biomedical maintenance equipment repair)
- Type of surface to be cleaned (e.g., hard-surfaced flooring versus carpeting)
- Type of soil or spilled infectious material present (e.g., gross contamination versus spattering, or blood versus urine)
- Tasks or procedures being performed in the area (e.g., laboratory analyses versus normal patient care)

Environmental contamination is an effective method of disease transmission for HBV--the Centers for Disease Control and Prevention (CDC) states that HBV can survive for at least one week in dried blood on environmental surfaces or contaminated needles and instruments. Employees must clean and decontaminate all contaminated equipment and environmental and work surfaces with an appropriate disinfectant:

- Upon completion of procedures

Tip--Where procedures are performed on a continual basis throughout a shift or a day, as may be the case with a clinical laboratory technician performing blood analyses, it is not a requirement that the work surface be decontaminated before the technician can proceed to the next analysis. Rather, contaminated work surfaces must be decontaminated after the procedures are completed which, in the above example, would include a "set" of analyses. The completion of procedures might also occur when an employee leaves the work area for a period of time.

- Immediately after any contact with blood or OPIM

Tip--There may be some instances in which "immediate" decontamination of overt contamination and spills may not be practical as with, for example, an operating table during surgery.

- At the end of the work shift

Refer to table 6 for a routine cleaning schedule and table 7 for methods for decontaminating equipment and surfaces.

Tip--The particular disinfectant used, as well as the frequency with which it is used, will depend upon the circumstances in which the housekeeping task occurs.

When protective coverings such as plastic wrap, aluminum foil, or imperviously-backed absorbent paper used to cover equipment and work surfaces become overtly contaminated, employees must remove and replace them immediately; otherwise they must be removed and replaced at the end of the shift.

Tip--More stringent decontamination rules, such as cleaning equipment or changing coverings between patients, may be prudent infection control policy but are not required by the standard.

Regularly inspect all bins, pails, cans, and receptacles intended for reuse that are potentially contaminated with infectious materials. Clean and decontaminate them immediately upon visible contamination. For example, a reusable metal trash can may be lined with a disposable plastic regulated waste bag that leaks and contaminates the can. In addition, regular decontamination will prevent the can from contaminating the outside of successive bags.

Tip--These containers should be disinfected with a hospital-grade detergent/disinfectant.

Contaminated broken glass is capable of inflicting percutaneous injury and direct inoculation of blood and OPIM into the bloodstream. Employees must not pick up broken glassware directly with the hands. It must be cleaned up using mechanical means such as a brush and dust pan, tongs, or forceps. Vacuum cleaners are not appropriate for cleanup of broken glass. The tools that are used in cleanup must be properly decontaminated or discarded after use and the broken glass gently placed in a sharps container.

Contaminated, reusable sharps must be stored or processed in containers that do not require reaching into them by hand.

(iii) Regulated Waste.
(A) Contaminated Sharps Discarding and Containment. (*1*) Contaminated sharps shall be discarded immediately or as soon as feasible in containers that are:
(*i*) Closable:
(*ii*) Puncture resistant:
(*iii*) Leakproof on sides and bottom: and
(*iv*) Labeled or color-coded in accordance with paragraph (g)(1)(i) of this standard.

Regulated Waste

The term "regulated waste" (also known as regulated medical waste, infectious waste, and infective waste) refers to the following categories of waste requiring specific handling:

- Contaminated sharps

> **Tip**—The EPA's Standard for the Tracking and Management of Medical Waste and a number of state regulations consider "used" needles to be regulated medical waste regardless of the presence of infectious agents.

- Liquid or semi-liquid blood or OPIM
- Items contaminated with blood or OPIM that would release these substances in a liquid or semi-liquid state if compressed
- Items caked with dried blood or OPIM and capable of releasing these materials during handling
- Pathological and microbiological wastes containing blood or OPIM

Regulated waste must be discarded in a designated container.

Contaminated sharps. Contaminated sharps must be discarded in containers that are:

- Closable
- Puncture resistant
- Leakproof on sides and bottom
- Properly labeled or color-coded

Tip--Sharps containers are made from a variety of materials, from cardboard to plastic. As long as they meet the definition of a sharps container, they are acceptable regardless of their composition.

The needle sheath must not be used as a waste container. Self-sheathing needle products must be disposed of in a sharps container.

Tip--Duct tape may be used to secure a sharps container lid, but is not acceptable if it serves as the lid itself.

(*2*) During use, containers for contaminated sharps shall be:
(*i*) Easily accessible to personnel and located as close as is feasible to the immediate area where sharps are used or can be reasonably anticipated to be found (e.g., laundries);
(*ii*) Maintained upright throughout use: and
(*iii*) Replaced routinely and not be allowed to overfill.

During use, containers for contaminated sharps must be:

- Easily accessible

Tips--In areas such as pediatric units, correctional facilities, or psychiatric units, there may be difficulty placing containers in the immediate use area. If a mobile cart is used by healthcare workers in these units, an alternative would be to lock a sharps container to the cart.

Laundries must have sharps containers easily accessible due to the incidence sharps being mixed with laundry.

Facilities that handle shipments of waste that may contain contaminated sharps must also have sharps containers available in case a package accidentally opens and releases sharps.

- Maintained upright throughout their use
- Filled only to 3/4 full and then replaced

> **Tip**--The ECP must specify how and when the sharps containers will be replaced (e.g., sharps containers must be transparent or must be installed at a height that allows employees to see if the containers are full).

(3) When moving containers of contaminated sharps from the area of use, the containers shall be:
(i) Closed immediately prior to removal or replacement to prevent spillage or protrusion of contents during handling, storage, transport, or shipping;
(ii) Placed in a secondary container if leakage is possible. The second container shall be:
(A) Closable;
(B) Constructed to contain all contents and prevent leakage during handling, storage, transport, or shipping; and
(C) Labeled or color-coded according to paragraph (g)(1)(i) of this standard.
(4) Reusable containers shall not be opened, emptied, or cleaned manually or in any other manner which would expose employees to the risk of percutaneous injury.

When moving contaminated sharps containers from their area of use, the containers must be:

- Closed immediately prior to removal or replacement
- Placed in a closable, leakproof, labeled or color-coded secondary container if leakage is possible

Reusable sharps containers must not be opened, emptied, or cleaned manually or in any way that would expose employees to injury. The only acceptable system is a fully automated container cleaning system and container emptying procedures or equipment that eliminates employee exposure to sharps.

(B) Other Regulated Waste Containment.(1) Regulated waste shall be placed in containers which are:
(i) Closable;
(ii) Constructed to contain all contents and prevent leakage of fluids during handling, storage, transport or shipping;
(iii) Labeled or color-coded in accordance with paragraph (g)(1)(i) this standard; and
(iv) Closed prior to removal to prevent spillage or protrusion of contents during handling, storage, transport, or shipping.

Other regulated waste. Regulated waste must be placed in containers that are:

- Closable
- Constructed to prevent leakage
- Properly labeled or color-coded

Tips--Even if your facility considers all of its waste to be regulated waste, the waste containers must still bear the required label or color-coding. This requirement is in contrast to the labeling alternative allowed when laundries use universal precautions for the handling of all soiled laundry.

Regulated waste that has been decontaminated need not be labeled or color-coded.

(2) If outside contamination of the regulated waste container occurs, it shall be placed in a second container. The second container shall be:
(*i*) Closable;
(*ii*) Constructed to contain all contents and prevent leakage of fluids during handling, storage, transport or shipping;
(*iii*) Labeled or color-coded in accordance with paragraph (g)(1)(i) of this standard; and
(*iv*) Closed prior to removal to prevent spillage or protrusion of contents during handling, storage, transport, or shipping.
(C) Disposal of all regulated waste shall be in accordance with applicable regulations of the United States, States and Territories, and political subdivisions of States and Territories.

If outside contamination of the regulated waste container occurs, it must be placed in a second container that also meets the above requirements. This provision does not require routine double-bagging but, rather, requires double-bagging in circumstances such as:

- A waste container was splashed with blood during surgery or autopsy
- A container has been handled by an employee with bloody gloves
- A waste bag leaked blood or OPIM onto an adjacent bag

(iv) Laundry.
(A) Contaminated laundry shall be handled as little as possible with a minimum of agitation. (1) Contaminated laundry shall be bagged or containerized at the location where it was used and shall not be sorted or rinsed in the location of use.
(2) Contaminated laundry shall be placed and transported in bags or containers labeled or color-coded in accordance with paragraph (g)(1)(i) of this standard. When a facility utilizes Universal Precautions in the handling of all soiled laundry, alternative labeling or color-coding is sufficient if it permits all employees to recognize the containers as requiring compliance with Universal Precautions.
(3) Whenever contaminated laundry is wet and presents a reasonable likelihood of soak-through of or leakage from the bag or container, the laundry shall be placed and transported in bags or containers which prevent soak-through and/or leakage of fluids to the exterior.

Contaminated laundry. Employee exposure to blood and OPIM is minimized by reducing the amount of manual handling of contaminated laundry. Limit the handling of laundry during bagging or containerization prior to washing. Restricting the sorting to the laundry area also reduces contamination of additional surfaces.

Employees must:

- Handle contaminated laundry as little as possible with a minimum of agitation
- Bag or containerize contaminated laundry at the location where it was generated
- Not sort or rinse contaminated laundry in the location where it was generated
- Properly label or color-code bags or containers of contaminated laundry

- Place contaminated wet laundry in bags or containers that prevent soak-through or leakage

> **Tip**--Use of water soluble bags can cause leakage of contaminants when the bags contact liquids. Water-soluble bags are *not* considered *leak resistant*.
>
> Consider wrapping wet items in dry sheeting or other linen before containerizing to sufficiently contain potential leakage of contaminants.

- Wear appropriate PPE, including gloves, eye protection, disposable head covers, disposable shoe covers, and plastic aprons when handling contaminated laundry

- Be provided with easily accessible sharps containers in laundries for the disposal of sharps found in linen

When employees use universal precautions in the handling of all soiled laundry, alternative labels or color-codes may be used for the bags/containers. However, all employees must be trained to recognize them as containing soiled laundry which requires the use of universal precautions.

(B) The employer shall ensure that employees who have contact with contaminated laundry wear protective gloves and other appropriate personal protective equipment.

Personal protective clothing. While many employees have traditionally laundered their own uniforms, laboratory coats, or the like, if the item's intended function is to act as personal protective clothing, it is the employer's responsibility to launder it so that:

- Proper handling and laundering procedures are followed

- There is no migration of contaminants to the home

(C) When a facility ships contaminated laundry off-site to a second facility which does not utilize Universal Precautions in the handling of all laundry, the facility generating the contaminated laundry must place such laundry in bags or containers which are labeled or color-coded in accordance with paragraph (g)(1)(i).

When contaminated laundry is shipped off-site to a second facility that does not use universal precautions in the handling of all soiled laundry, it must also be properly labeled or color-coded.

Tip–When laundering the contaminated linen in hot water, laundry employees should use a detergent in water at least 71°C (160°F) for 25 minutes, following the detergent manufacturers' recommended washing instructions. For low-temperature (≤ 70°C, 158°F) laundry cycles, laundry employees should use the proper concentration of chemicals recommended by the product manufacturer.

Inspection

Disinfectants. To verify that the appropriate disinfectants are being used, the OSHA compliance officer will consult the EPA lists of:

- Registered sterilants (representing the highest level of antimicrobial activity that destroys all viruses)
- Tuberculocidal disinfectants (effective against tuberculosis bacteria and the specific viruses named on the product label as well as HBV)
- Antimicrobials with HIV-efficacy claims

Products registered by the EPA as HIV-effective are not necessarily tuberculocidal and are therefore not necessarily effective against HBV, which is more resistant to inactivation than is HIV. To determine the overall effectiveness of a particular product with an HIV-efficacy claim for use in a cleanup where HBV or other BBP are also of concern, the OSHA compliance officer will compare the listing of HIV-effective products with the other two listings to verify that they overlap.

Tip—Use only EPA-registered sterilants or tuberculocidal disinfectants in areas with potential exposures to HIV *and* HBV.

Training. The OSHA compliance officer will verify that employees have been trained in proper housekeeping procedures.

Regulated Waste. The OSHA compliance officer will not use the actual volume of blood as the determining factor in whether or not a particular material is considered regulated waste. Rather, the potential for dripping of liquid blood or OPIM, or flaking off of dried blood or OPIM, will be considered.

The OSHA compliance officer will ensure:

- Training was provided to employees on the proper use of regulated waste containers

- Regulated waste containers are properly labeled or color-coded

- The exposure control plan states the decontamination procedures for regulated waste

Contaminated Sharps. The OSHA compliance officer, unless provided information to the contrary, will consider "used" needles to be contaminated.

Sharps Containers. The OSHA compliance officer will determine if:

- Sharps containers are as close as feasible to where sharps are used or can be reasonably anticipated to be found

- Sharps containers are closable, color coded or labeled, puncture resistant, and leakproof on sides and bottom

- The exposure control plan specifies how and when the sharps containers will be replaced

- There are no visible signs of leakage of fluids during handling, storage, transport, or shipping

Laundry. The OSHA compliance officer will check the:

- Laundry collection program

- Laundering of personal protective clothing by the employer

- Training of the employees assigned to laundry tasks

- Shipping of laundry to another facility

Housekeeping Checklist

1. Are there written procedures for cleaning and decontaminating:

- Environmental surfaces (e.g., floors)? Yes__ No__
- Work surfaces? Yes__ No__
- Equipment? Yes__ No__

2. Do cleaning and decontaminating procedures specify products used and the use dilutions? Yes__ No__

3. Do the written procedures specify decontaminating work surfaces? Yes__ No__

- Upon completing a procedure? Yes__ No__
- After overt contamination during a procedure? Yes__ No__
- At the end of the work shift? Yes__ No__

4. Are written procedures established for reusable trash receptacles used to hold contaminated items, including:

- A regular schedule for inspecting and decontaminating containers? Yes__ No__
- Procedures for cleaning and decontaminating when visibly contaminated? Yes__ No__

5. Has the definition of regulated waste been reviewed and revised so it is consistent with OSHA's definition? Yes__ No__

6. Are the containers for regulated waste:

- Closable? Yes__ No__
- Leakproof? Yes__ No__
- Puncture resistant for contaminated sharps? Yes__ No__
- Labeled or color-coded per paragraph (g)(1)(i) of the standard? Yes__ No__

7a. Are secondary containers provided when the outside of the primary container is contaminated? Yes__ No__

7b. Do secondary containers meet the same requirements as the primary containers? Yes__ No__

8. Does your Exposure Control Plan's procedures for handling, bagging, and transporting contaminated laundry:

- Prohibit sorting or rinsing in patient areas? Yes__ No__
- Specify the types of bags or containers employees will use to prevent leakage? Yes__ No__
- Specify alternative labeling when universal precautions are used for handling all contaminated laundry? Yes__ No__

9. Does your employee training cover all procedures for identifying, handling, bagging, and transporting contaminated laundry? Yes__ No__

10a. Do you provide laundry employees with appropriate PPE to prevent occupational exposure? Yes__ No__

10b. Are these employees trained on its proper use? Yes__ No__

Table 6
Routine Cleaning Schedule

Location*	Frequency
Patient Room	Daily
Patient Bathroom	Daily
Exam Room	Daily
Procedure Room	Between Procedures
Operating Room	Between Cases
Delivery Room	Between Deliveries
Dialysis	Between Patients
Laboratory	When Overtly Contaminated or Daily, Whichever Occurs First
Ambulance	Between Calls

* This list of locations is not exhaustive.

Table 7
Methods for Decontaminating Equipment and Surfaces

Method	Equipment
Sterilization--	
Steam under pressure, gas, dry heat, or immersion in an EPA-registered chemical "sterilant" for prolonged period of time according to manufacturer's instructions. Note: Use liquid chemical "sterilants" only on those instruments that are impossible to sterilize or disinfect with heat. Contact the manufacturer if you are unsure.	Instruments or devices that penetrate skin or contact normally sterile areas of the body (e.g., scalpels, needles, dental handpieces and prophy angles, etc.).
High-Level Disinfection--	
Hot water pasteurization (80-100°C, 30 minutes) or exposure to an EPA-registered chemical as above, except for a short exposure time in accordance with manufacturer's instructions.	For reusable instruments or devices that come into contact with mucous membranes (e.g., laryngoscope blades, endotracheal tubes, etc.).
Intermediate-Level Disinfection--	
EPA-registered "hospital disinfectant" chemical with tuberculocidal efficacy claims are acceptable; commercially available hard surface germicides or solutions containing at least 500 ppm free available chlorine (1:100 dilution of common household bleach--approximately ¼ cup bleach per gallon of tap water).	For those surfaces that contact only intact skin (e.g., blood pressure cuffs, stethoscopes, splints, etc.) and are visibly contaminated with blood or OPIM. Preclean all surfaces of visible material before chemical application.
Low-Level Disinfection--	
EPA-registered "hospital disinfectant" chemical without tuberculocidal efficacy claims.	Use for routine housekeeping or removal of soil without visible blood contamination.
Environmental Disinfection--	
Clean and disinfect environmental surfaces that are soiled using any cleaner or disinfectant agent intended for environmental use.	Surfaces including floors, walls, ambulance seats, countertops, etc.

* Ensure all disinfectants are EPA labeled for their intended use and ensure all labeling instructions are completely followed.

ELEMENT 3:

HIV AND HBV RESEARCH LABORATORIES AND PRODUCTION FACILITIES

HIV and HBV Research Laboratories and Production Facilities

The Standard

(e) *HIV and HBV Research Laboratories and Production Facilities.* (1) This paragraph applies to research laboratories and production facilities engaged in the culture, production, concentration, experimentation, and manipulation of HIV and HBV. It does not apply to clinical or diagnostic laboratories engaged solely in the analysis of blood, tissues, or organs.

These requirements apply in addition to the other requirements of the standard.

(2) Research laboratories and production facilities shall meet the following criteria:

(i) Standard microbiological practices. All regulated waste shall either be incinerated or decontaminated by a method such as autoclaving known to effectively destroy bloodborne pathogens.

(ii) Special practices.

(A) Laboratory doors shall be kept closed when work involving HIV or HBV is in progress.

(B) Contaminated materials that are to be decontaminated at a site away from the work area shall be placed in a durable, leakproof, labeled or color-coded container that is closed before being removed from the work area.

(C) Access to the work area shall be limited to authorized persons. Written policies and procedures shall be established whereby only persons who have been advised of the potential biohazard, who meet any specific entry requirements, and who comply with all entry and exit procedures shall be allowed to enter the work areas and animal rooms.

(D) When other potentially infectious materials or infected animals are present in the work area or containment module, a hazard warning sign incorporating the universal biohazard symbol shall be posted on all access doors. The hazard warning sign shall comply with paragraph (g)(1)(ii) of this standard.

(E) All activities involving other potentially infectious materials shall be conducted in biological safety cabinets or other physical-containment devices within the containment module. No work with these other potentially infectious materials shall be conducted on the open bench.

Compliance

Research Laboratories *and* Production Facilities

Research laboratory and production facility requirements stated here are based largely upon guidelines published by the CDC and the National Institutes of Health (NIH).

The CDC-NIH Biosafety Level 3 (BSL 3) criteria were adopted into law by way of the standard; additional requirements were added as well. Research laboratories and production facilities must meet these criteria discussed in the following sections on standard microbiological practices, special practices, containment equipment, and facilities design.

In addition to the requirements of the standard, a number of other requirements apply specifically to research laboratories and production facilities engaged in the culture, production, concentration, experimentation, and manipulation of HIV and HBV.

Employers of research laboratories and production facilities must comply with all of the requirements of the entire standard. Requirements stated elsewhere in this guide are not repeated in this section.

The standard defines a "research laboratory," including an academic research laboratory, as a laboratory that:

- Cultures, produces, concentrates, experiments, and manipulates or uses research laboratory scale amounts of HIV or HBV
- Deals with solutions containing higher viral titers than those normally found in patient's blood

Those research laboratories **not** covered by the standard:

- Conduct research unrelated to HIV or HBV on blood and other body fluids
- Use unconcentrated blood or blood components as the source of HIV or HBV

(F) Laboratory coats, gowns, smocks, uniforms, or other appropriate protective clothing shall be used in the work area and animal rooms. Protective clothing shall not be worn outside of the work area and shall be decontaminated before being laundered.

(G) Special care shall be taken to avoid skin contact with other potentially infectious materials. Gloves shall be worn when handling infected animals and when making hand contact with other potentially infectious materials is unavoidable.

(H) Before disposal all waste from work areas and from animal rooms shall either be incinerated or decontaminated by a method such as autoclaving known to effectively destroy bloodborne pathogens.

(I) Vacuum lines shall be protected with liquid disinfectant traps and high-efficiency particulate air (HEPA) filters or filters of equivalent or superior efficiency and which are checked routinely and maintained or replaced as necessary.

(J) Hypodermic needles and syringes shall be used only for parenteral injection and aspiration of fluids from laboratory animals and diaphragm bottles. Only needle-locking syringes or disposable syringe-needle units (i.e., the needle is integral to the syringe) shall be used for the injection or aspiration of other potentially infectious materials. Extreme caution shall be used when handling needles and syringes. A needle shall not be bent, sheared, replaced in the sheath or guard, or removed from the syringe following use. The needle and syringe shall be promptly placed in a puncture-resistant container and autoclaved or decontaminated before reuse or disposal.

(K) All spills shall be immediately contained and cleaned up by appropriate professional staff or others properly trained and equipped to work with potentially concentrated infectious materials.

(L) A spill or accident that results in an exposure incident shall be immediately reported to the laboratory director or other responsible person.

(M) A biosafety manual shall be prepared or adopted and periodically reviewed and updated at least annually or more often if necessary. Personnel shall be advised of potential hazards, shall be required to read instructions on practices and procedures, and shall be required to follow them.

The standard defines a "production facility" as a facility engaged in industrial scale, large volume, or high concentration production of HIV or HBV.

Standard Microbiological Practices

Incinerate or decontaminate all regulated waste to destroy blood and OPIM and prevent the accidental exposure of employees to the concentrated viruses.

Special Practices

Limit access to the laboratory and warn of the hazards associated with blood and OPIM:

- Keep laboratory doors closed when working with HIV or HBV.
- Place contaminated materials that will be decontaminated at a site away from the work area in a durable, leakproof, labeled or color-coded container that is closed before being removed from the work area.
- Limit work area access to authorized persons only. Written policies and procedures must be established regarding persons allowed to enter the work areas and animal rooms. All personnel must:
  - Be advised of the biohazard
  - Meet any specific entry requirements
  - Comply with all entry and exit procedures
- Post a hazard warning sign--which includes the biohazard symbol--on all access doors when OPIM or infected animals are present in the work area or containment module.

- Conduct all activities involving OPIM in BSCs or other physical containment devices. Open bench work is prohibited.

Tip--The "other physical containment device" must be sufficient to ensure that virus-containing material will be kept away from the employee's mucous membranes, unprotected skin, and breathing zone (for example, a safety centrifuge cup is designed to prevent aerosol release during centrifugation).

- Wear appropriate protective clothing--such as laboratory coats, gowns, smocks, and uniforms--in the work area and animal rooms. Wearing protective clothing outside the work area is prohibited. All protective clothing must be decontaminated prior to laundering.

- Take special care to avoid skin contact with OPIM. Gloves must be worn when handling infected animals and when making hand contact with OPIM.

- To prevent the spread of contamination to other work areas, incinerate or decontaminate all waste from work areas and animal rooms by a method such as autoclaving.

- Protect vacuum lines with liquid disinfectant traps and high-efficiency particulate air (HEPA) filters, or filters of equal or superior efficiency. Routinely check the filters and traps and maintain or replace as needed.

Tip--HEPA filters may be ineffective in humid atmospheres. Therefore, the use of equivalent or superior substitutes is permitted.

- Use extreme caution when handling needles and syringes:

  - Hypodermic needles and syringes must be used only for parenteral injection and aspiration of fluids from laboratory animals and diaphragm bottles.

  - Needle-locking syringes or disposable syringe-needle units must be used to inject or aspirate OPIM.

  - Needles must not be bent, sheared, replaced in the sheath or guard, or removed from the syringe following use.

  - Needles and syringes must be placed in a puncture-resistant container and autoclaved or decontaminated before reuse or disposal.

- Have appropriate professional staff or others trained to work with potentially concentrated infectious materials immediately contain and clean up all spills.

A spill or accident that results in an exposure incident must be immediately reported to the lab director or equivalent person with authority.

Prepare or adopt a biosafety manual to ensure that any necessary additional procedures are developed to protect research/production facility employees from exposure. Review and update the manual at least annually and document the annual reviews. Employees must be advised of potential hazards and must read, understand, and practice all procedures outlined in the manual.

Containment Equipment

(iii) Containment equipment. (A) Certified biological safety cabinets (Class I, II, or III) or other appropriate combinations of personal protection or physical containment devices, such as special protective clothing, respirators, centrifuge safety cups, sealed centrifuge rotors, and containment caging for animals, shall be used for all activities with other potentially infectious materials that pose a threat of exposure to droplets, splashes, spills, or aerosols.
(B) Biological safety cabinets shall be certified when installed, whenever they are moved and at least annually.

For all activities involving OPIM that pose a threat of exposure by droplets, splashes, spills, or aerosols, appropriate combinations of personal protection and physical containment devices, such as those listed below, must be used:

- Certified BSCs (classes I, II, or III)

- Special protective clothing

- Respirators (If respirators are provided and worn, a respiratory protection program must be developed and implemented, the requirements for which are in 29 CFR 1910.134.)

- Centrifuge safety cups
- Sealed centrifuge rotors
- Containment caging for animals

Certify BSCs at least annually, and immediately after they are installed or moved. OSHA considers BSCs adequately certified and documented when:

- A dated tag indicating certification by a trained technician is affixed to the BSC

  or

- A dated report, signed by a trained technician, attests to the minimum inward face velocity of 75 linear fpm and the HEPA filter integrity

Figures 1, 2, 3, and 4 show the basic operational features of the three classes of BSCs.

(3) HIV and HBV research laboratories shall meet the following criteria:
(i) Each laboratory shall contain a facility for hand washing and an eye wash facility which is readily available within the work area.
(ii) An autoclave for decontamination of regulated waste shall be available.
(4) HIV and HBV production facilities shall meet the following criteria:

HIV and HBV Research Laboratories

In addition to those requirements for research laboratories *and* production facilities, each research laboratory must contain facilities for handwashing and eyewashing readily available within the work area:

- Handwashing facilities' features:
  - Wrist-, knee-, or foot-activated or automatically operated
  - Warm water
  - Soap dispensers
  - Individual paper hand toweling
- Emergency eyewash facilities' features must meet ANSI Standard Z358.1:
  - Plumbed units that provide a controlled flow of flushing fluid to both eyes simultaneously at a velocity low enough to prevent injury to the user

- Temperature of delivered water should be between 60°F and 95°F

- Activator valve goes from "off" to "on" in one second or less, is large enough to locate, and is simple to operate by the user

- Flow rate is at least 1.5 lpm (0.4 gpm), streams rise to approximately equal heights, and the fluid supply continues for at least 15 minutes

- Personal equipment and portable units are prohibited

Each research laboratory must also contain an autoclave for decontaminating regulated waste.

(i) The work areas shall be separated from areas that are open to unrestricted traffic flow within the building. Passage through two sets of doors shall be the basic requirement for entry into the work area from access corridors or other contiguous areas. Physical separation of the high-containment work area from access corridors or other areas or activities may also be provided by a double-doored clothes-change room (showers may be included), airlock, or other access facility that requires passing through two sets of doors before entering the work area.

(ii) The surfaces of doors, walls, floors and ceilings in the work area shall be water resistant so that they can be easily cleaned. Penetrations in these surfaces shall be sealed or capable of being sealed to facilitate decontamination.

(iii) Each work area shall contain a sink for washing hands and a readily available eye wash facility. The sink shall be foot, elbow, or automatically operated and shall be located near the exit door of the work area.

(iv) Access doors to the work area or containment module shall be self-closing.

(v) An autoclave for decontamination of regulated waste shall be available within or as near as possible to the work area.

HIV and HBV Production Facilities

In addition to those requirements for research laboratories *and* production facilities, each production facility must have a proper facility design that provides:

- A barrier for persons outside the work area but within the facility

- Protection to the community from infectious agents that may be accidentally released from the facility

Production facilities' designs must:

- Separate work areas from areas that are open to unrestricted traffic flow within the building

- Include passage through two sets of doors (including passage through a double-doored clothes-change room, airlock, or other access facility that requires passing through two sets of doors before entering the work area) for entry into the work area from any contiguous areas

- Have doors, walls, floors, and ceilings with water-resistant surfaces so they can be easily cleaned (penetrations in these surfaces must be sealed to facilitate decontamination)

(vi) A ducted exhaust-air ventilation system shall be provided. This system shall create directional airflow that draws air into the work area through the entry area. The exhaust air shall not be recirculated to any other area of the building, shall be discharged to the outside, and shall be dispersed away from occupied areas and air intakes. The proper direction of the airflow shall be verified (i.e., into the work area).

- Contain an eyewashing facility near the hazard(s) and handwashing facility located near the exit door of the work area, and be foot-, elbow-, or automatically operated
- Have self-closing access doors to the work area or containment module
- An autoclave within or as near as possible to the work area
- Be provided with a ducted exhaust-air ventilation system that:
  - Creates directional airflow that draws air into the work area through the entry area (i.e., room should be under negative pressure)
  - Discharges exhaust air outside of the building
  - Disperses exhaust air away from occupied areas and air intakes
  - Does not allow exhaust air to be recirculated to any other area of the building

(5) *Training Requirements.* Additional training requirements for employees in HIV and HBV research laboratories and HIV and HBV production facilities are specified in paragraph (g)(2)(ix).

Training Requirements

There are initial training requirements for employees before they begin work in HIV or HBV research laboratories and production facilities in addition to the training requirements specified in section (g)(2)(i-viii) of the standard, located in element 5.

The employer, specifically the lab director or equivalent, is responsible for providing training to lab personnel so they can develop the proficiency to safely handle such agent(s).

The employer must:

- Ensure employees demonstrate proficiency in standard microbiological practices and techniques,
- Ensure employees have prior experience in handling human pathogens or tissue cultures, or

- Provide a training program to those employees who have no prior experience in handling human pathogens:

  - Do not include the handling of infectious agents in initial work activities.

  - Assign a progression of work activities as techniques are learned and proficiency developed.

Employees working with infectious agents must:

- Know the potential hazards associated with the agent(s) with which they are working

- Demonstrate proficiency in practices and techniques associated with specific agents

Inspection

To determine if the requirements of this section of the standard are being met, the OSHA compliance officer will:

- Review the covered laboratory's/facility's plan
- Interview employees
- Observe work practices

Specifically, the OSHA compliance officer will:

- Review the written policies and procedures to determine if they are adequate to ensure that unauthorized individuals are not placed at risk and that they cannot distract or otherwise interfere with the work of the authorized employees
- Interview employees to determine if the written policies and procedures are being followed
- Contact the manufacturer of the filters/traps to establish their limits and required maintenance if it appears engineering controls are failing to prevent the spread of viruses
- Determine if the use of needles and syringes is kept to a minimum and if they are properly handled as required
- Determine if the puncture-resistant containers are properly autoclaved or decontaminated before being discarded, reused, or incinerated
- Ensure that BSCs have been certified when installed or moved, and at least annually

HIV and HBV Research Laboratories Checklist

1. Are employees using standard microbiological practices? Yes__ No__

2. Are these special practices followed:

   - Appropriate warning signs posted at the entrance(s)? Yes__ No__
   - Access limited to authorized persons? Yes__ No__
   - Lab doors remain closed while work is in progress? Yes__ No__
   - Contaminated materials are properly and adequately packaged for removal from work area to decontamination site? Yes__ No__
   - All work areas are properly identified and labeled to warn of biohazards? Yes__ No__
   - Appropriate PPE is provided and maintained at no cost to employees? Yes__ No__
   - PPE is used by all employees (smocks, gowns, gloves, lab coats, uniforms, etc.)? Yes__ No__
   - PPE is decontaminated before laundering? Yes__ No__
   - PPE is not worn outside the containment module? Yes__ No__
   - All activities involving infectious agents are carried out in BSCs within the containment module? Yes__ No__
   - All waste from work areas is effectively decontaminated by incineration, autoclaving, or equivalent before disposal? Yes__ No__
   - Vacuum lines are protected with liquid disinfectant traps and HEPA filters, or equivalent? Yes__ No__
     - These traps and filters are routinely checked and maintained? Yes__ No__

- Needles and syringes are placed in puncture-resistant containers promptly after use? Yes__ No__
  - These containers (and contents) are decontaminated before reuse or disposal? Yes__ No__
  - Absolutely no manipulation of needles and syringes takes place? Yes__ No__
  - No needles are resheathed? Yes__ No__
- Spills are immediately contained and cleaned up by trained employees? Yes__ No__
- Exposure incidents are immediately reported? Yes__ No__
- A biosafety manual is prepared or adopted? Yes__ No__
  - Employees read and follow policies? Yes__ No__
  - The manual is updated annually? Yes__ No__
  - The manual is reviewed periodically? Yes__ No__

3. Are the certified BSCs (classes I, II, or III) that are used for containment of aerosols, spills, and splashes of infectious materials:

- Certified annually? Yes__ No__
- Certified when installed? Yes__ No__
- Certified when repaired? Yes__ No__
- Certified when moved? Yes__ No__

4. Alternatively, are other physical containment devices used (e.g., special protective clothing, respirators, centrifuge safety cups, etc.)? Yes__ No__

5. Is there a readily accessible handwashing facility in the work area? Yes__ No__

6. Is there a readily accessible eyewash facility in the work area? Yes__ No__

7. Is there an autoclave for decontaminating regulated waste? Yes__ No__

8. Do employees receive additional training as described in the standard, paragraph (g)(2)(ix)? Yes__ No__

HIV and HBV Production Facilities Checklist

1. Are employees using standard microbiological practices? Yes__ No__

2. Are these special practices followed:

   - Appropriate warning signs posted at the entrance(s)? Yes__ No__
   - Access limited to authorized persons? Yes__ No__
   - Lab doors remain closed while work is in progress? Yes__ No__
   - Contaminated materials are properly and adequately packaged for removal from work area to decontamination site? Yes__ No__
   - All work areas are properly identified and labeled to warn of biohazards? Yes__ No__
   - Appropriate PPE is provided and maintained at no cost to employees? Yes__ No__
   - PPE is used and is worn properly by all employees (smocks, gowns, gloves, lab coats, uniforms, etc.)? Yes__ No__
   - PPE is decontaminated before laundering? Yes__ No__
   - PPE is not worn outside the containment module? Yes__ No__
   - All activities involving infectious agents are carried out in BSCs within the containment module? Yes__ No__
   - All waste is effectively decontaminated by incineration, autoclaving, or equivalent before removal from work areas or animal rooms? Yes__ No__
   - Vacuum lines are protected with liquid disinfectant traps and HEPA filters, or equivalent? Yes__ No__
     - These traps and filters are routinely checked and maintained? Yes__ No__

- Needles and syringes are placed in puncture-resistant containers promptly after use? Yes__ No__

  - These containers (and contents) are decontaminated before reuse or disposal? Yes__ No__

  - Absolutely no manipulation of needles and syringes takes place? Yes__ No__

  - No needles are resheathed? Yes__ No__

- Spills are immediately contained and cleaned up by trained employees? Yes__ No__

- Exposure incidents are immediately reported? Yes__ No__

- A biosafety manual is prepared or adopted? Yes__ No__

  - Employees read and follow policies? Yes__ No__

  - The manual is updated annually? Yes__ No__

  - The manual is reviewed periodically? Yes__ No__

3. Are the certified BSCs (classes I, II, or III) that are used for containment of aerosols, spills, and splashes of infectious materials:

- Certified annually? Yes__ No__

- Certified when installed? Yes__ No__

- Certified when repaired? Yes__ No__

- Certified when moved? Yes__ No__

4. Alternatively, are other physical containment devices used (e.g., special protective clothing, respirators, centrifuge safety cups, etc.)? Yes__ No__

5. Are work areas physically separated from corridors, passing through two sets of doors? Yes__ No__

6. Are door, wall, floor, and ceiling surfaces in work areas water-resistant for easy cleaning? Yes__ No__

- Are all penetrations in these surfaces sealed? Yes__ No__

7. Is there a readily accessible eyewashing facility in the work area? Yes__ No__

8. Is there a readily accessible handwashing facility in the work area? Yes__ No__

- Is the sink operated by foot, elbow, or automatically? Yes__ No__

- Is the sink located near the exit door of the work area? Yes__ No__

9. Are the doors to the containment module self-closing? Yes__ No__

10. Is an autoclave located within or as near as possible to the work area? Yes__ No__

11. Is a ducted exhaust-air ventilation system installed? Yes__ No__

12. Do employees receive additional training as described in the standard, paragraph (g)(2)(ix)? Yes__ No__

Figure 1
Class I BSC Operational Features

CLASS I BSC
OPERATIONAL FEATURES

1. Air is drawn through the front face opening (A) at a minimum of 75 fpm by an exhaust blower located after the HEPA filter (E). NOTE: The airflow is similar to that of a chemical fume hood.
2. The HEPA filter (E) protects the environment from any released particulates.
3. Personnel safety is provided since the inward airflow draws air away from the breather (user) and toward the work.
4. This type cabinet is used when work sterility is not necessary.

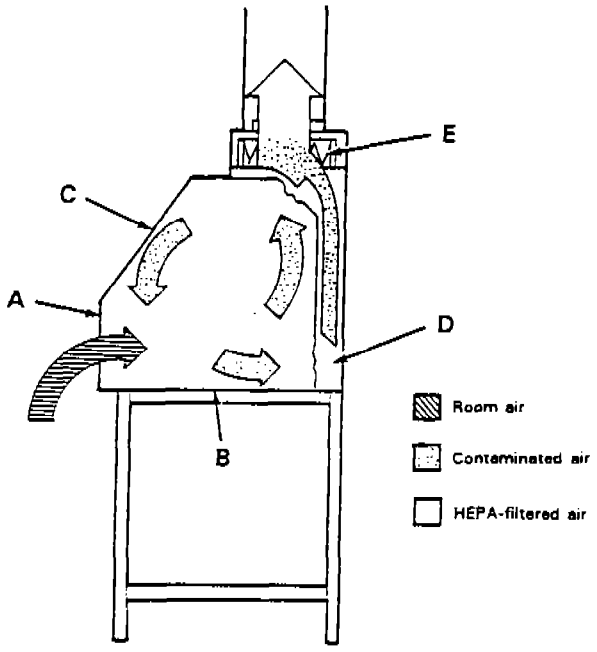

Side View

A - Front opening
B - Work surface
C - Window
D - Exhaust plenum
E - HEPA filter

Figure 2
Class II Type A BSC Operational Features

CLASS II TYPE A BSC OPERATIONAL FEATURES

Class II cabinets were designed to provide personnel, product, and environmental protection when working with low to moderate risk microorganisms. While the HEPA filtration is effective in capturing particulates it does not prevent free passage of hazardous gases.

1. The internal blower (A) draws room air inward and downward through the face opening and front grate at a minimum 75 fpm inflow velocity for personnel protection.
2. The blower (A) also draws HEPA filtered work area air through the front and rear grates for product protection.
3. The total volume of air is discharged through the rear plenum (B) to the supply (C) and exhaust (D) filters.
4. Approximately 30% of the total volume of air leaves the cabinet through the exhaust filter (D) for environmental protection.
5. The remaining 70% passes through the supply filter (C) back into the work area for product protection.

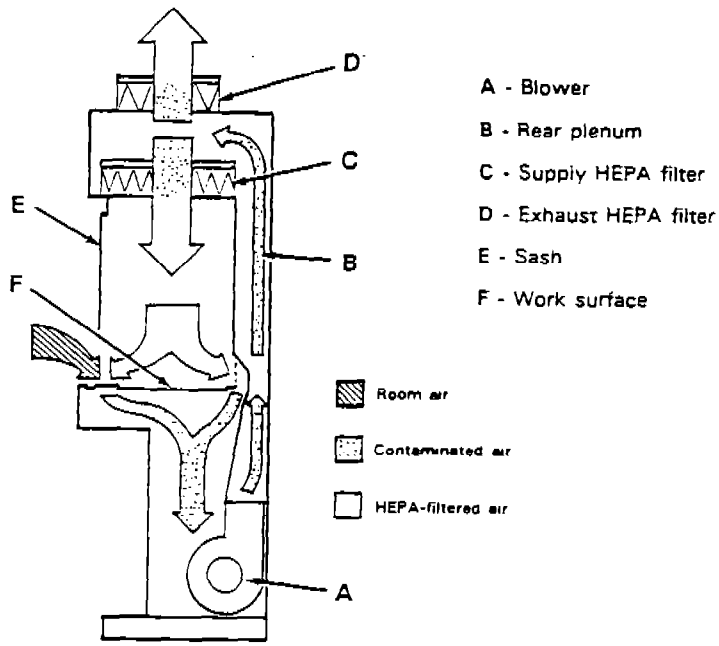

Side View

Figure 3
Class II Type B1 BSC Operational Features

CLASS II TYPE B1 BSC OPERATIONAL FEATURES

As for the Class II Type A Cabinets, these were designed to provide personnel, product, and environmental protection.

1. The internal blowers (A) draw room air at a minimum inflow velocity of 100 fpm plus 30% of the work area air through the front gate for personnel protection.
2. The air passes through the supply filter (B), up through the side plenums (D), through a back pressure plate (E), and back down into the work area. The HEPA filtered supply air provides product protection.
3. The building exhaust system draws 70% of the work area air through the rear grate (G) through the exhaust filter (F) and out of the building. The HEPA filtered exhaust provides environmental protection.

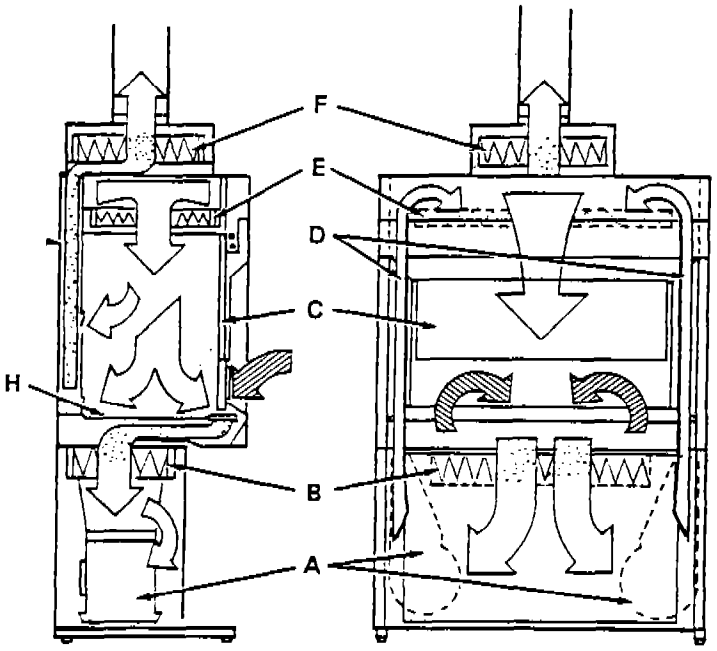

Side View

Front View

A - Blowers

B - Supply HEPA filters

C - Sliding sash

D - Positive pressure plenums

E - Additional supply HEPA filter or back-pressure plate

F - Exhaust HEPA filter

G - Negative pressure exhaust plenum

H - Work surface

Room air

Contaminated air

HEPA-filtered air

Figure 4
Class III BSC Operational Features

CLASS III BSC
OPERATIONAL FEATURES

This class was designed for work with high-risk microorganisms and is a closed system which does not allow direct access to the work. This class is rarely needed and is found only in maximum containment facilities.

1. Manipulations are done with long, heavy duty rubber gloves that are sealed by O-rings (C) to the openings (B) in the front face.
2. Items are passed in and out of the cabinet through an autoclave (G). Alternatively, you can use a chemical dunk tank.
3. All supply and exhaust air are HEPA filtered (E,F). The airflow is produced by exhaust suction to maintain negative pressure inside the cabinet.
4. Any leakage through the exterior will flow into the cabinet, which will disallow hazards to move into the room.

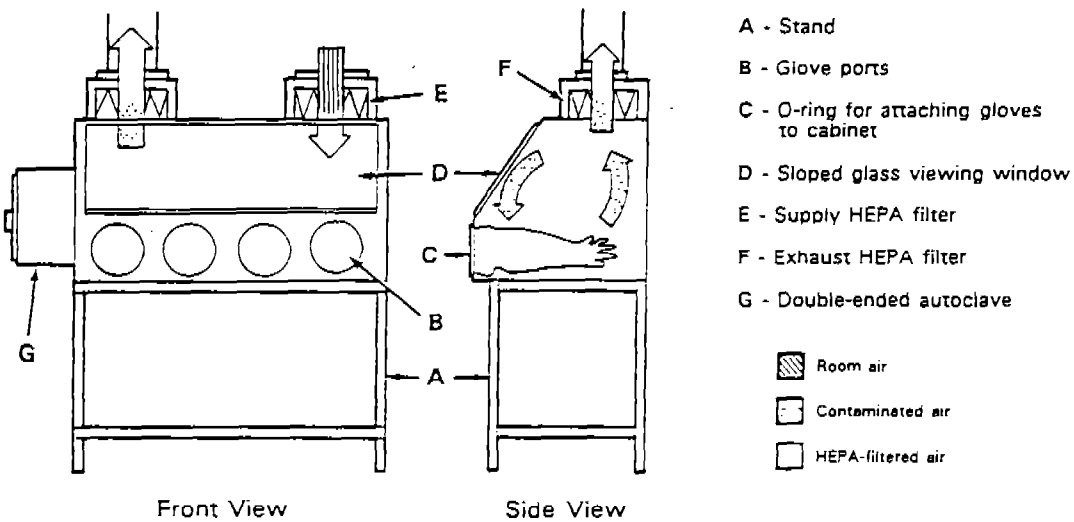

ELEMENT 4:

HEPATITIS B VACCINATION AND POST-EXPOSURE EVALUATION AND FOLLOW-UP

General

The Standard

(f) *Hepatitis B vaccination and post-exposure evaluation and follow-up—(1) General.* (i) The employer shall make available the hepatitis B vaccine and vaccination series to all employees who have occupational exposure, and post-exposure evaluation and follow-up to all employees who have had an exposure incident.

(ii) The employer shall ensure that all medical evaluations and procedures including the hepatitis B vaccine and vaccination series and post-exposure evaluation and follow-up, including prophylaxis, are:

(A) Made available at no cost to the employee;

(B) Made available to the employee at a reasonable time and place;

(C) Performed by or under the supervision of a licensed physician or by or under the supervision of another licensed healthcare professional; and

(D) Provided according to recommendations of the U.S. Public Health Service current at the time these evaluations and procedures take place, except as specified by this paragraph (f).

(iii) The employer shall ensure that all laboratory tests are conducted by an accredited laboratory at no cost to the employee.

Compliance

General

Offer all employees who have occupational exposure to blood or OPIM the hepatitis B vaccine and vaccination series. Offer all employees who have had an exposure incident a confidential post-exposure evaluation and follow-up.

Ensure that all medical evaluations and procedures, including prophylaxis, are made available:

- At no cost to the employee, including travel away from the work site

Tips—The employee must not be required to use his healthcare insurance to pay for the vaccination series unless the employer pays all of the cost of the health insurance and there is no cost to the employee in the form of deductibles, co-payments, or other expenses. Even partial employee contribution to the insurance premium is unacceptable because the employee could be affected by a rise in the total premium caused by insurance company reaction to widespread hepatitis B vaccination.

The employer may not institute a program in which the employee pays the original cost of the vaccine and is reimbursed by the employer if he remains employed for a specified period of time.

An "amortization contract" that requires employees to reimburse the employer for the cost of the vaccination should they leave his employ prior to a specified period of time is also prohibited.

- At a time and place convenient to the employee, during normally scheduled work hours

- By or under the supervision of a licensed physician or another licensed healthcare professional (LHCP)

> **Tip**–Check with the state board of nursing licensure to determine if LHCPs other than licensed physicians are allowed to carry out the required medical evaluations and procedures.

- In accordance with current U.S. Public Health Service (USPHS) recommendations and guidelines (see figure 5 for diagram of the guidelines for the hepatitis B vaccination)

All laboratory tests must be conducted at an accredited laboratory at no cost to the employee.

(2) *Hepatitis B Vaccination.* (i) Hepatitis B vaccination shall be made available after the employee has received the training required in paragraph (g)(2)(vii)(I) and within 10 working days of initial assignment to all employees who have occupational exposure unless the employee has previously received the complete hepatitis B vaccination series, antibody testing has revealed that the employee is immune, or the vaccine is contraindicated for medical reasons.

(ii) The employer shall not make participation in a prescreening program a prerequisite for receiving hepatitis B vaccination.

(iii) If the employee initially declines hepatitis B vaccination but at a later date while still covered under the standard decides to accept the vaccination, the employer shall make available hepatitis B vaccination at that time.

Hepatitis B Vaccination

Offer the hepatitis B vaccination to all occupationally exposed employees–including part-time and temporary employees--regardless of how often the exposure may occur:

- Within 10 working days of initial assignment

- After specific training that includes:

  - Efficacy, safety, and administration method of the vaccination

  - Benefits of the vaccination

The hepatitis B vaccination must be given in the standard dose and through the standard route of administration as recommended by the USPHS/CDC.

Figure 5
Guidelines for Hepatitis B Vaccination

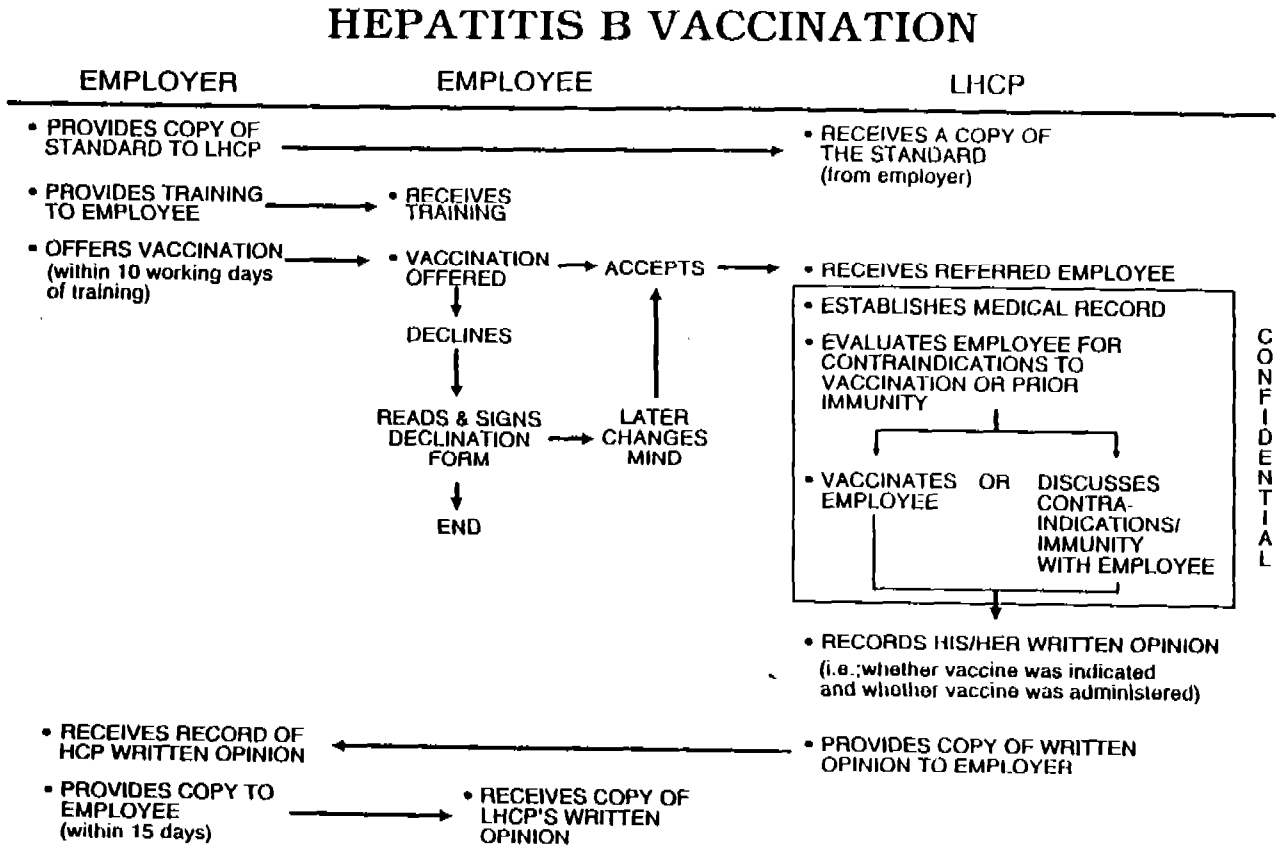

(iv) The employer shall assure that employees who decline to accept hepatitis B vaccination offered by the employer sign the statement in appendix A.

(v) If a routine booster dose(s) of hepatitis B vaccine is recommended by the U.S. Public Health Service at a future date. such booster dose(s) shall be made available in accordance with section (f)(1)(ii).

Tip--Intradermal inoculation of 0.1 of the normal dose of the hepatitis B vaccine is not recommended by the USPHS and, therefore, is not an acceptable administration method.

Employers are not required to routinely test immune status after vaccination has been completed.

A fact sheet covering the symptoms of hepatitis and the benefits of vaccination is provided. It may be reproduced and distributed to employees.

Employers are not required to offer the vaccination:

- To employees who have previously received the hepatitis B vaccination series
- When immunity is confirmed through antibody testing
- If the vaccine is contraindicated for other medical reasons

If the employer claims one of these exemptions, it must be documented in the employee's medical record.

Employees may:

- Decline vaccination only by signing a declination statement (see the example provided). The signing of the declination form by the employee does not relieve the employer from the requirement to provide the vaccine at a later date if the employee so chooses.
- Receive vaccination without prescreening for antibody status.

FACT SHEET
HEPATITIS B VIRUS AND
THE HEPATITIS B VACCINATION

Hepatitis is a liver disease, initially resulting in possible liver inflammation and frequently leading to more serious conditions including cirrhosis and liver cancer. In the United States, there are approximately 300,000 new cases of HBV, the most prevalent form of hepatitis, every year.

Healthcare workers are 20 times more likely to contract hepatitis B than the normal population. It is estimated there are as many as 18,000 new cases of HBV each year among healthcare workers, which result in 200-300 deaths. While there is no cure for hepatitis B, a vaccine does exist that can prevent infection.

In healthcare settings, HBV is most often transmitted through breaks in the skin or mucous membranes. This usually occurs through needlesticks, human bites, or when infectious material (such as blood or other body fluids) enters existing cuts or abrasions.

The early symptoms of HBV infection are very much like a mild "flu." Initially, there is a sense of fatigue, possible stomach pain, loss of appetite, and even nausea. As the disease continues to develop, jaundice (a distinct yellowing of the skin) and a darkened urine will often occur. However, people who are infected with HBV will often show no initial symptoms.

After exposure, it can take two to six months for hepatitis B to develop. This is extremely important, since vaccinations begun immediately after exposure to the virus can often prevent infection.

The hepatitis B vaccine is 85-97% effective at protecting you from getting HBV or becoming a carrier for nine years or longer if the series is completed.

HEPATITIS B VACCINATION
DECLINATION STATEMENT

I understand that due to my occupational exposure to blood or other potentially infectious materials I may be at risk of acquiring hepatitis B virus (HBV) infection. I have been given the opportunity to be vaccinated with hepatitis B, at no charge to myself. However, I decline hepatitis B vaccination at this time. I understand that by declining this vaccine, I continue to be at risk of acquiring hepatitis B, a serious disease. If in the future I continue to have occupational exposure to blood or other potentially infectious materials and I want to be vaccinated with hepatitis B vaccine, I can receive the vaccination series at no charge to me.

_____ _____
Employee's Signature Date

_____
Employee's Job Classification

_____ _____
Witness Date

Tip--Prevaccination screening for antibody status cannot be required of an employee, although if an employer wishes, he can make it available at no cost to employees. An employee may decline the prescreening, and the employer must still make the vaccination series available to the employee.

- Postpone vaccination.

The employer is not currently required to provide boosters unless the USPHS recommends it at a later date.

Post-Exposure Evaluation and Follow-Up

A diagram of post-exposure evaluation and follow-up procedures to follow is provided as figure 6.

Tip--Employees who do not fall within the scope of this standard may still experience specific exposure incidents at work that are unrelated to the performance of their job duties. In such cases, OSHA strongly encourages their respective employers to offer them the follow-up procedures set forth below.

When an exposure incident occurs, the employee must:

- Immediately initiate work site first aid
- Notify his supervisor or, if unavailable, immediately report to the health clinic during normal duty hours or to the emergency room after normal duty hours

There is a placard for your use in the event of an exposure incident. In addition, record the exposure incident on an Exposure Incident Investigation form such as the one provided, then send it to the LHCP with all other documents. The procedures for recording exposure incidents follow.

(3) *Post-exposure Evaluation and Follow-up.* Following a report of an exposure incident, the employer shall make immediately available to the exposed employee a confidential medical evaluation and follow-up, including at least the following elements:

(i) Documentation of the route(s) of exposure, and the circumstances under which the exposure incident occurred:

(ii) Identification and documentation of the source individual, unless the employer can establish that identification is infeasible or prohibited by state or local law;

(A) The source individual's blood shall be tested as soon as feasible and after consent is obtained in order to determine HBV and HIV infectivity. If consent is not obtained, the employer shall establish that legally required consent cannot be obtained. When the source individual's consent is not required by law, the source individual's blood, if available, shall be tested and the results documented.

(B) When the source individual is already known to be infected with HBV or HIV, testing for the source individual's known HBV or HIV status need not be repeated.

(C) Results of the source individual's testing shall be made available to the exposed employee, and the employee shall be informed of applicable laws and regulations concerning disclosure of the identity and infectious status of the source individual.

Figure 6
Diagram for Post-Exposure Evaluation and Follow-Up Procedures

POST-EXPOSURE EVALUATION AND FOLLOW-UP

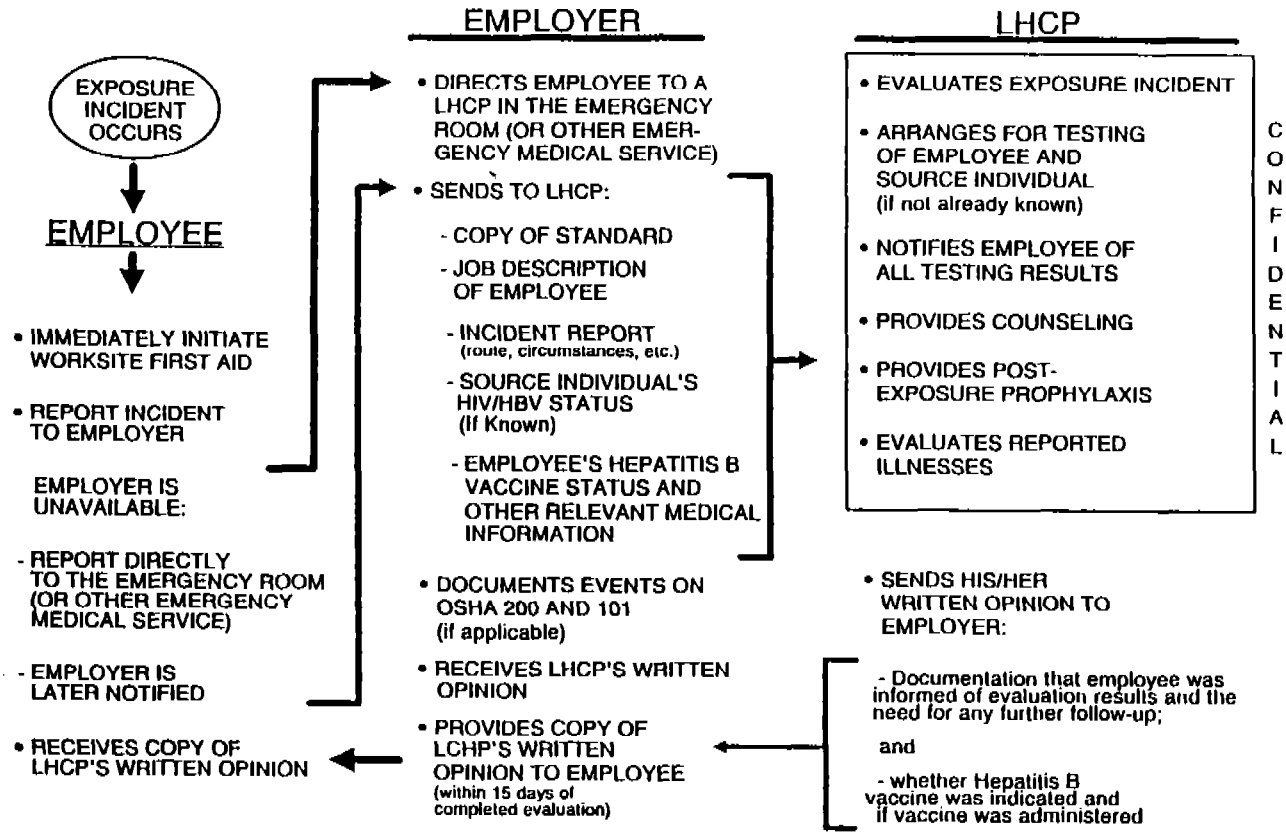

3 Emergency Steps to Take In the Event Of a BBP Exposure Incident

1. Immediately initiate work site first aid.

   a. Scrub contaminated skin for 10 minutes using a povidone iodine solution (such as Betadine) and copious amounts of water.

   b. Irrigate contaminated eyes and mucous membranes for 15 minutes using normal saline or water.

2. Notify your supervisor, if he or she is immediately available. Otherwise, go on to step three.

3. Report to the emergency room.

EXPOSURE INCIDENT INVESTIGATION FORM

Date of incident: Time of incident:

Location:

Potentially infectious materials involved:

Type:

Source:

Circumstances (work performed, etc.):

How incident was caused (accident, equipment malfunction, etc.):

Personal protective equipment used:

Action taken (decontaminating, cleanup, reporting, etc.):

Recommendations for avoiding re-injury:

(iii) Collection and testing of blood for HBV and HIV serological status:
(A) The exposed employee's blood shall be collected as soon as feasible and tested after consent is obtained.
(B) If the employee consents to baseline blood collection, but does not give consent at that time for HIV serologic testing, the sample shall be preserved for at least 90 days. If, within 90 days of the exposure incident, the employee elects to have the baseline sample tested, such testing shall be done as soon as feasible.

(iv) Post-exposure prophylaxis, when medically indicated, as recommended by the U.S. Public Health Service;
(v) Counseling; and
(vi) Evaluation of reported illnesses.

For OSHA 200 recordkeeping purposes, classify an occupational exposure incident (e.g., needlestick, laceration, splash) as an injury. A diagrammed guide for recordability of cases under the Occupational Safety and Health Act is provided for your use (see figure 7). Record the injury if it meets one of the following recordability requirements:

- The incident is a work-related injury that involves loss of consciousness, transfer to another job, or restriction of work or motion.

- The incident results in the recommendation of medical treatment beyond first aid (i.e., gamma globulin, hepatitis B immune globulin, hepatitis B vaccine, or zidovudine) regardless of dosage. Tetanus is *not* included as a treatment beyond first aid.

- The incident results in a diagnosis of seroconversion. Do not record the employee's serological status on the OSHA 200. If a case of seroconversion is known, record it on the OSHA 200 as an injury (e.g., "needlestick" rather than "seroconversion)" as follows:

  - If the date of the original incident is known, record that date in column B.

  - If there are multiple incidents, record the most recent incident with the date of the determined seroconversion in column B.

For every injury entered on OSHA 200, it is necessary to record additional information on the supplementary record, OSHA 101 (copies of both forms follow):

- To eliminate duplicate recordings, workers' compensation and other reports—such as DA Form 285, CA-1, or CA-16—may be used only if they contain all the items on OSHA 101.

- Completed supplementary records must be present in the place of business within six workdays after the employer is notified of the respective injury.

Figure 7
Guide to Recordability of Cases Under the Occupational Safety and Health Act

Guide to recordability of cases under the Occupational Safety and Health Act

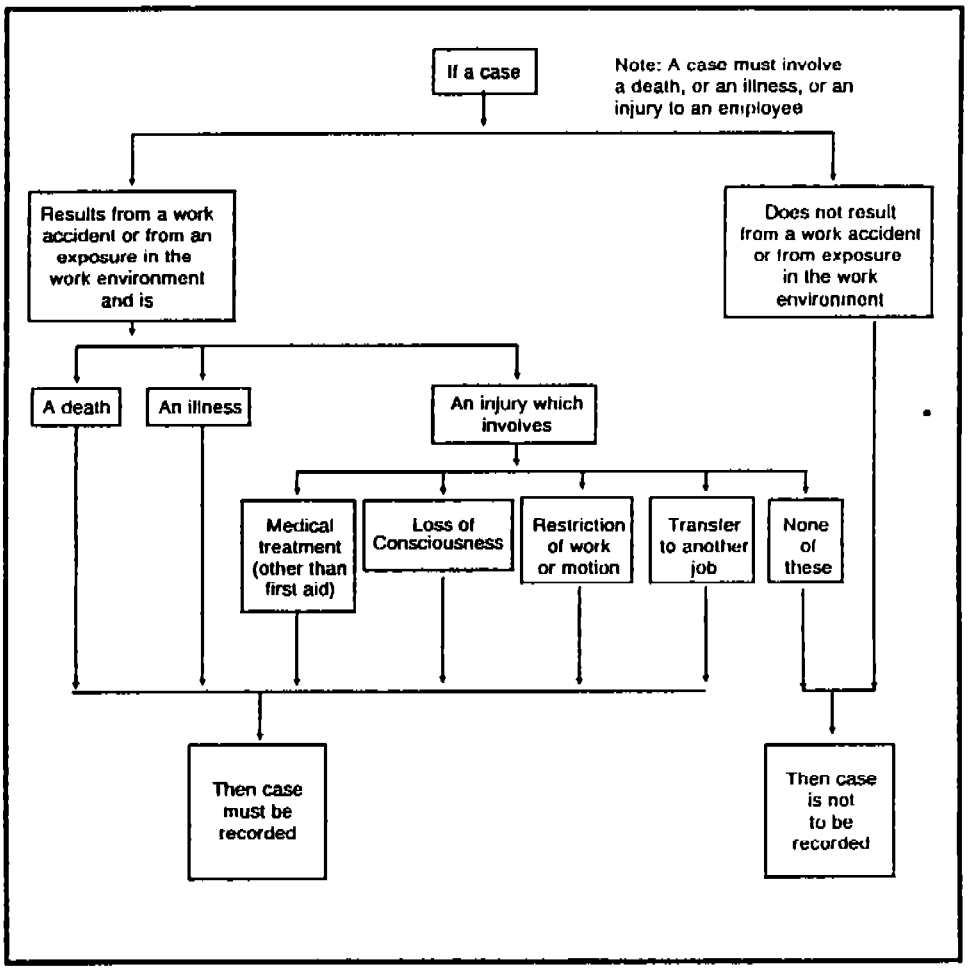

Bureau of Labor Statistics
Log and Summary of Occupational
Injuries and Illnesses

U.S. Department of Labor

For Calendar Year 19 _____ Page ____ of ____

NOTE: This form is required by Public Law 91-596 and must be kept in the establishment for 5 years. Failure to maintain and post can result in the issuance of citations and assessment of penalties. *(See posting requirements on the other side of form.)*

RECORDABLE CASES: You are required to record information about every occupational death; every nonfatal occupational illness, and those nonfatal occupational injuries which involve one or more of the following: loss of consciousness, restriction of work or motion, transfer to another job, or medical treatment (other than first aid). *(See definitions on the other side of form.)*

Company Name
Establishment Name
Establishment Address

Form Approved
O.M.B. No. 1220-0029
See OMB Disclosure Statement on reverse.

Case or File Number	Date of Injury or Onset of Illness	Employee's Name	Occupation	Department	Description of Injury or Illness	Extent of and Outcome of INJURY: Fatalities	Nonfatal Injuries: Injuries With Lost Workdays				Injuries Without Lost Workdays	Type, Extent of, and Outcome of ILLNESS: Type of Illness (CHECK Only One Column for Each Illness)							Fatalities	Nonfatal Illnesses: Illnesses With Lost Workdays				Illnesses Without Lost Workdays
Enter a nonduplicating number which will facilitate comparisons with supplementary records.	Enter Mo./day.	Enter first name or initial, middle initial, last name.	Enter regular job title, not activity employee was performing when injured or at onset of illness. In the absence of a formal title, enter a brief description of the employee's duties.	Enter department in which the employee is regularly employed or a description of normal workplace to which employee is assigned, even though temporarily working in another department at the time of injury or illness.	Enter a brief description of the injury or illness and indicate the part or parts of body affected. Typical entries for this column might be Amputation of 1st joint right forefinger. Strain of lower back; Contact dermatitis on both hands; Electrocution—body	Injury Related: Enter DATE of death. Mo./day/yr.	Enter a CHECK if injury involves days away from work, or days of restricted work activity, or both.	Enter a CHECK if injury involves days away from work.	Enter number of DAYS away from work.	Enter number of DAYS of restricted work activity.	Enter a CHECK if no entry was made in columns 1 or 2 but the injury is recordable as defined above.	Occupational skin diseases or disorders	Dust diseases of the lungs	Respiratory conditions due to toxic agents	Poisoning (systemic effects of toxic materials)	Disorders due to physical agents	Disorders associated with repeated trauma	All other occupational illnesses.	Illness Related: Enter DATE of death. Mo./day/yr.	Enter a CHECK if illness involves days away from work, or days of restricted work activity, or both.	Enter a CHECK if illness involves days away from work.	Enter number of DAYS away from work.	Enter number of DAYS of restricted work activity.	Enter a CHECK if no entry was made in columns 8 or 9.
(A)	(B)	(C)	(D)	(E)	(F)	(1)	(2)	(3)	(4)	(5)	(6)	(7) (a)	(b)	(c)	(d)	(e)	(f)	(g)	(8)	(9)	(10)	(11)	(12)	(13)
					PREVIOUS PAGE TOTALS →																			
					TOTALS (instructions on other side of form.) →																			

INJURIES

ILLNESSES

Certification of Annual Summary Totals By _____ Title _____ Date _____

OSHA No. 200

FOLD

OSHA No. 200

POST ONLY THIS PORTION OF THE LAST PAGE NO LATER THAN FEBRUARY 1.

OSHA No. 200 ★U.S. GPO: 1990-262-256/15419

OMB DISCLOSURE STATEMENT

We estimate that it will take from 4 minutes to 30 minutes to complete a line entry on this form, including time for reviewing instructions; searching, gathering and maintaining the data needed; and completing and reviewing the entry. If you have any comments regarding this estimate or any other aspect of this recordkeeping system, send them to the Bureau of Labor Statistics, Division of Management Systems (1220-0029), Washington, D.C. 20212 and to the Office of Management and Budget, Paperwork Reduction Project (1220-0029), Washington, D.C. 20503.

Instructions for OSHA No. 200

I. Log and Summary of Occupational Injuries and Illnesses

Each employer who is subject to the recordkeeping requirements of the Occupational Safety and Health Act of 1970 must maintain for each establishment a log of all recordable occupational injuries and illnesses. This form (OSHA No. 200) may be used for that purpose. A substitute for the OSHA No. 200 is acceptable if it is as detailed, easily readable, and understandable as the OSHA No. 200.

Enter each recordable case on the log within six (6) workdays after learning of its occurrence. Although other records must be maintained at the establishment to which they refer, it is possible to prepare and maintain the log at another location, using data processing equipment if desired. If the log is prepared elsewhere, a copy updated to within 45 calendar days must be present at all times in the establishment.

Logs must be maintained and retained for five (5) years following the end of the calendar year to which they relate. Logs must be available (normally at the establishment) for inspection and copying by representatives of the Department of Labor, or the Department of Health and Human Services, or States accorded jurisdiction under the Act. Access to the log is also provided to employees, former employees and their representatives

II. Changes in Extent of or Outcome of Injury or Illness

If, during the 5-year period the log must be retained, there is a change in an extent and outcome of an injury or illness which affects entries in columns 1, 2, 6, 8, 9, or 13, the first entry should be lined out and a new entry made. For example, if an injured employee at first required only medical treatment but later lost workdays away from work, the check in column 6 should be lined out, and checks entered in columns 2 and 3 and the number of lost workdays entered in column 4.

In another example, if an employee with an occupational illness lost workdays, returned to work, and then died of the illness, any entries in columns 9 through 12 should be lined out and the date of death entered in column 8.

The entire entry for an injury or illness should be lined out if later found to be nonrecordable For example, an injury which is later determined not to be work related, or which was initially thought to involve medical treatment but later was determined to have involved only first aid.

III. Posting Requirements

A copy of the totals and information following the fold line of the last page for the year must be posted at each establishment in the place or places where notices to employees are customarily posted. This copy must be posted no later than *February 1 and must remain in place until March 1.*

Even though there were no injuries or illnesses during the year, zeros must be entered on the totals line, and the form posted.

The person responsible for the *annual summary totals* shall certify that the totals are true and complete by signing at the bottom of the form.

IV. Instructions for Completing Log and Summary of Occupational Injuries and Illnesses

Column A — CASE OR FILE NUMBER. Self-explanatory.

Column B — DATE OF INJURY OR ONSET OF ILLNESS.
For occupational injuries, enter the date of the work accident which resulted in injury. For occupational illnesses, enter the date of initial diagnosis of illness, or, if absence from work occurred before diagnosis, enter the first day of the absence attributable to the illness which was later diagnosed or recognized.

Columns C through F — Self-explanatory.

Columns 1 and 8 — INJURY OR ILLNESS-RELATED DEATHS.
Self-explanatory.

Columns 2 and 9 — INJURIES OR ILLNESSES WITH LOST WORKDAYS.
Self-explanatory.

Any injury which involves days away from work, or days of restricted work activity, or both must be recorded since it always involves one or more of the criteria for recordability.

Columns 3 and 10 — INJURIES OR ILLNESSES INVOLVING DAYS AWAY FROM WORK. Self-explanatory.

Columns 4 and 11 — LOST WORKDAYS—DAYS AWAY FROM WORK.
Enter the number of workdays (consecutive or not) on which the employee would have worked but could not because of occupational injury or illness. The number of lost workdays should not include the day of injury or onset of illness or any days on which the employee would not have worked even though able to work.
NOTE: For employees not having a regularly scheduled shift, such as certain truck drivers, construction workers, farm labor, casual labor, part-time employees, etc., it may be necessary to estimate the number of lost workdays. Estimates of lost workdays shall be based on prior work history of the employee AND days worked by employees, not ill or injured, working in the department and/or occupation of the ill or injured employee.

Columns 5 and 12 — LOST WORKDAYS—DAYS OF RESTRICTED WORK ACTIVITY.
Enter the number of workdays (consecutive or not) on which because of injury or illness:
(1) the employee was assigned to another job on a temporary basis, or
(2) the employee worked at a permanent job less than full time, or
(3) the employee worked at a permanently assigned job but could not perform all duties normally connected with it.

The number of lost workdays should not include the day of injury or onset of illness or any days on which the employee would not have worked even though able to work.

Columns 6 and 13 — INJURIES OR ILLNESSES WITHOUT LOST WORKDAYS. Self-explanatory.

Columns 7a through 7g — TYPE OF ILLNESS.
Enter a check in only one column for each illness.

TERMINATION OR PERMANENT TRANSFER—Place an asterisk to the right of the entry in columns 7a through 7g (type of illness) which represented a termination of employment or permanent transfer.

V. Totals

Add number of entries in columns 1 and 8.
Add number of checks in columns 2, 3, 6, 7, 9, 10, and 13.
Add number of days in columns 4, 5, 11, and 12.
Yearly totals for each column (1-13) are required for posting. Running or page totals may be generated at the discretion of the employer.

If an employee's loss of workdays is continuing at the time the totals are summarized, estimate the number of future workdays the employee will lose and add that estimate to the workdays already lost and include this figure in the annual totals. No further entries are to be made with respect to such cases in the next year's log.

VI. Definitions

OCCUPATIONAL INJURY is any injury such as a cut, fracture, sprain, amputation, etc., which results from a work accident or from an exposure involving a single incident in the work environment.
NOTE: Conditions resulting from animal bites, such as insect or snake bites or from one-time exposure to chemicals, are considered to be injuries.

OCCUPATIONAL ILLNESS of an employee is any abnormal condition or disorder, other than one resulting from an occupational injury, caused by exposure to environmental factors associated with employment. It includes acute and chronic illnesses or diseases which may be caused by inhalation, absorption, ingestion, or direct contact.

The following listing gives the categories of occupational illnesses and disorders that will be utilized for the purpose of classifying recordable illnesses. For purposes of information, examples of each category are given. These are typical examples, however, and are not to be considered the complete listing of the types of illnesses and disorders that are to be counted under each category.

7a. Occupational Skin Diseases or Disorders
Examples: Contact dermatitis, eczema, or rash caused by primary irritants and sensitizers or poisonous plants; oil acne; chrome ulcers; chemical burns or inflammations; etc.

7b Dust Diseases of the Lungs (Pneumoconioses)
Examples Silicosis, asbestosis and other asbestos-related diseases, coal worker's pneumoconiosis, byssinosis, siderosis, and other pneumoconioses.

7c. Respiratory Conditions Due to Toxic Agents
Examples Pneumonitis, pharyngitis, rhinitis or acute congestion due to chemicals, dusts, gases, or fumes; farmer's lung, etc

7d. Poisoning (Systemic Effect of Toxic Materials)
Examples: Poisoning by lead, mercury, cadmium, arsenic, or other metals; poisoning by carbon monoxide, hydrogen sulfide, or other gases; poisoning by benzol, carbon tetrachloride, or other organic solvents; poisoning by insecticide sprays such as parathion, lead arsenate; poisoning by other chemicals such as formaldehyde, plastics, and resins; etc.

7e. Disorders Due to Physical Agents (Other than Toxic Materials)
Examples: Heatstroke, sunstroke, heat exhaustion, and other effects of environmental heat; freezing, frostbite, and effects of exposure to low temperatures; caisson disease; effects of ionizing radiation (isotopes, X-rays, radium); effects of nonionizing radiation (welding flash, ultraviolet rays, microwaves, sunburn); etc.

7f. Disorders Associated With Repeated Trauma
Examples: Noise-induced hearing loss; synovitis, tenosynovitis, and bursitis; Raynaud's phenomena; and other conditions due to repeated motion, vibration, or pressure.

7g. All Other Occupational Illnesses
Examples: Anthrax, brucellosis, infectious hepatitis, malignant and benign tumors, food poisoning, histoplasmosis, coccidioidomycosis, etc.

MEDICAL TREATMENT includes treatment (other than first aid) administered by a physician or by registered professional personnel under the standing orders of a physician. Medical treatment does NOT include first-aid treatment (one-time treatment and subsequent observation of minor scratches, cuts, burns, splinters, and so forth, which do not ordinarily require medical care) even though provided by a physician or registered professional personnel.

ESTABLISHMENT: A single physical location where business is conducted or where services or industrial operations are performed (for example: a factory, mill, store, hotel, restaurant, movie theater, farm, ranch, bank, sales office, warehouse, or central administrative office). Where distinctly separate activities are performed at a single physical location such as construction activities operated from the same physical location as a lumber yard, each activity shall be treated as a separate establishment

For firms engaged in activities which may be physically dispersed, such as agriculture; construction; transportation; communications; and electric, gas, and sanitary services, records may be maintained at a place to which employees report each day.

Records for personnel who do not primarily report or work at a single establishment, such as traveling salesmen, technicians, engineers, etc., shall be maintained at the location from which they are paid or the base from which personnel operate to carry out their activities.

WORK ENVIRONMENT is comprised of the physical location, equipment, materials processed or used, and the kinds of operations performed in the course of an employee's work, whether on or off the employer's premises.

Bureau of Labor Statistics
Supplementary Record of
Occupational Injuries and Illnesses

U.S. Department of Labor

This form is required by Public Law 91-596 and must be kept in the establishment for 5 years. Failure to maintain can result in the issuance of citations and assessment of penalties.

Case or File No.

Form Approved
O.M.B. No. 1220-0029

Employer

1. Name
2. Mail address *(No. and street, city or town, State, and zip code)*
3. Location, if different from mail address

Injured or Ill Employee

4. Name *(First, middle, and last)* — Social Security No.
5. Home address *(No. and street, city or town, State, and zip code)*
6. Age — 7. Sex: *(Check one)* Male ☐ Female ☐
8. Occupation *(Enter regular job title, not the specific activity he was performing at time of injury.)*
9. Department *(Enter name of department or division in which the injured person is regularly employed, even though he may have been temporarily working in another department at the time of injury.)*

The Accident or Exposure to Occupational Illness

If accident or exposure occurred on employer's premises, give address of plant or establishment in which it occurred. Do not indicate department or division within the plant or establishment. If accident occurred outside employer's premises at an identifiable address, give that address. If it occurred on a public highway or at any other place which cannot be identified by number and street, please provide place references locating the place of injury as accurately as possible.

10. Place of accident or exposure *(No. and street, city or town, State, and zip code)*
11. Was place of accident or exposure on employer's premises? Yes ☐ No ☐
12. What was the employee doing when injured? *(Be specific. If he was using tools or equipment or handling material, name them and tell what he was doing with them.)*
13. How did the accident occur? *(Describe fully the events which resulted in the injury or occupational illness. Tell what happened and how it happened. Name any objects or substances involved and tell how they were involved. Give full details on all factors which led or contributed to the accident. Use separate sheet for additional space.)*

Occupational Injury or Occupational Illness

14. Describe the injury or illness in detail and indicate the part of body affected. *(E.g., amputation of right index finger at second joint; fracture of ribs; lead poisoning; dermatitis of left hand, etc.)*
15. Name the object or substance which directly injured the employee. *(For example, the machine or thing he struck against or which struck him; the vapor or poison he inhaled or swallowed; the chemical or radiation which irritated his skin; or in cases of strains, hernias, etc., the thing he was lifting, pulling, etc.)*
16. Date of injury or initial diagnosis of occupational illness
17. Did employee die? *(Check one)* Yes ☐ No ☐

Other

18. Name and address of physician
19. If hospitalized, name and address of hospital

Date of report | Prepared by | Official position

OSHA No. 101 (Feb. 1981)

Following an exposure incident, make immediately available to the employee a confidential medical evaluation and follow-up:

- Document the routes and circumstances of exposure (this will help determine if PPE is being used or if training is lacking).

- Identify and document the source of contamination (source individual), unless infeasible or prohibited by state or local law.

> **Tip**--The employer must document in writing the identity of, or infeasibility of identifying, the source individual. Examples of when it may not be feasible to identify the source individual include incidents of needlesticks by unmarked syringes left in laundry or those involving improperly labeled blood samples.

- Test the source individual's blood for HBV and HIV infection immediately (if the source individual is already known to be infected with HBV or HIV, testing need not be repeated). If consent is required by law, it must be obtained prior to testing; if consent is not given, this must be documented in writing. When consent is not required by law, available blood from the source individual must be tested and the results documented.

> **Tip**--The term "available" applies to blood samples that have already been drawn from the source individual. OSHA does not require redrawing of blood specifically for HBV and HIV testing without consent of the source individual.

- Provide the exposed employee with the source individual's test results, and inform him/her of the laws and regulations concerning disclosure of the identity and infectious status of the source individual.

Tip--The employer is not authorized to be informed of the results of source individual or exposed employee testing. However, the boundary between employer and LHCP may be where, for example, the physician is both the employer and the evaluating LHCP. In such cases, requirements for consent and confidentiality must be followed.

- Immediately collect and test the exposed employee's blood. If the employee consents to baseline blood collection, but does not consent to HIV serologic testing, preserve the sample for at least 90 days in the event the employee elects to have the testing.

- Administer post-exposure prophylaxis, if medically indicated.

- Counsel the employee (provide the employee with a copy of the fact sheet on sustaining a needlestick injury).

Tip--Counseling and evaluation of reported illnesses is not dependent on the employee's electing to have baseline HBV and HIV serological testing.

- Evaluate reported exposure incident-related illness.

Expedient medical evaluation is the key to minimizing disease acquisition after exposure incidents.

FACT SHEET FOR EMPLOYEES WHO HAVE SUSTAINED A NEEDLESTICK INJURY

People who have sustained a needlestick or similar type of exposure to blood or body fluids are at possible risk for development of several transmissible diseases, the most important of which are: HIV; hepatitis B; hepatitis C.

More information about each of these diseases follows.

I. HIV

Although HIV is a serious disease, it is very difficult to transmit by needlesticks. Even when the source of the blood is infected with HIV, the chance of contracting the disease through a needlestick appears to be approximately 1 in 300. This risk was determined by careful follow-up of persons exposed by needlestick to known positive sources. If the source of your needlestick is unknown or not at risk for HIV, then the chance the source is positive is very low.

The LHCP will assess any significant risk to you. The medical follow-up, which will involve a series of blood tests over the next year, will determine your infectivity or noninfectivity. If your risk is insignificant you may still request and receive the tests and undergo medical follow-up by the Occupational Health Clinic or service. Should you develop fever, chills, and muscle aches and severe headaches during the next 6 months, schedule a reevaluation since there is a possibility these nonspecific symptoms are related to HIV (most such illnesses, however, are not related to HIV).

II. Hepatitis B

Hepatitis B is a viral infection involving the liver, and constitutes an important risk associated with needlestick exposures. Hepatitis B is transmitted much more easily than HIV; infection occurs within about 25% of employees exposed to a known positive source. Fortunately, we have treatment available that may prevent the development of hepatitis B, or lessen its severity if you are infected. There is also a safe and effective vaccine which is advised for most employees.

The LHCP will assess the risk of your exposure and prescribe appropriate therapy and/or follow-up with the Occupational Health Clinic or equivalent. Should you develop a yellow color in the normally white portion of your eyes, a marked darkening of your urine, or substantial nausea or abdominal pain during the next six months, schedule a reevaluation.

III. Hepatitis C

Hepatitis C (once called non-A, non-B) is another viral liver infection, and used to be the most common transfusion-associated infection. Fortunately, we now have a screening test for hepatitis C which permits the exclusion of most infected blood from use. Even more commonly than with hepatitis B, hepatitis C can progress to chronic liver disease. The risk of getting hepatitis C from a known positive source is not well established, but appears to be about 2-4% by needlestick. If the LHCP finds that your source might represent a significant risk for hepatitis C, you will be given a treatment which it is hoped will help prevent you from becoming infected.

(4) *Information Provided to the Healthcare Professional.* (i) The employer shall ensure that the healthcare professional responsible for the employee's Hepatitis B vaccination is provided a copy of this regulation.

(ii) The employer shall ensure that the healthcare professional evaluating an employee after an exposure incident is provided the following information:

(A) A copy of this regulation:

(B) A description of the exposed employee's duties as they relate to the exposure incident:

(C) Documentation of the route(s) of exposure and circumstances under which exposure occurred:

(D) Results of the source individual's blood testing, if available: and

(E) All medical records relevant to the appropriate treatment of the employee including vaccination status which are the employer's responsibility to maintain.

Information Provided to the LHCP

After documenting the incident, send the following to the LHCP:

- A copy of the standard
- A description of the employee's job duties as they relate to the exposure incident
- A report describing the routes and circumstances of exposure
- The source individual's HBV/HIV status (if obtainable or if known)
- The employee's hepatitis B vaccine status and all medical records relevant to the treatment of the employee (making sure those records remain confidential)

Post-exposure evaluation and follow-up checkpoints and a sample transmittal form are provided.

(5) *Healthcare Professional's Written Opinion.* The employer shall obtain and provide the employee with a copy of the evaluating healthcare professional's written opinion within 15 days of the completion of the evaluation.

(i) The healthcare professional's written opinion for Hepatitis B vaccination shall be limited to whether Hepatitis B vaccination is indicated for an employee, and if the employee has received such vaccination.

(ii) The healthcare professional's written opinion for post-exposure evaluation and follow-up shall be limited to the following information:

(A) That the employee has been informed of the results of the evaluation: and

(B) That the employee has been told about any medical conditions resulting from exposure to blood or other potentially infectious materials which require further evaluation or treatment.

(iii) All other findings or diagnoses shall remain confidential and shall not be included in the written report.

(6) *Medical recordkeeping.* Medical records required by this standard shall be maintained in accordance with paragraph (h)(1) of this section.

LHCP's Written Opinion

Within 15 days of completing the evaluation, the employer must obtain and provide the employee with the LHCP's written opinion including:

- Documentation that the LHCP reported the test results and follow-up needs to the employee (all other findings/diagnoses must remain confidential and must not be included in the written report)
- Whether vaccine evaluation or treatment was indicated and administered

REMEMBER . . .

CONFIDENTIALITY!

POST-EXPOSURE EVALUATION AND FOLLOW-UP CHECKPOINTS

Activity _____	Completion Dates
1. Employee furnished with documentation regarding exposure incident.	_____
2. Source individual identified.	
Source individual _____	_____
3. Source individual's blood tested and results given to exposed employee. Was consent obtained? Yes or No	_____
4. Exposed employee's blood collected and tested.	_____
5. Appointment arranged for employee with LHCP.	_____

TRANSMITTAL FORM

LHCP'S NAME: _____

ADDRESS: _____

_____

_____

DOCUMENTATION FORWARDED TO LHCP:

- BBP STANDARD
- DESCRIPTION OF EXPOSED EMPLOYEE'S DUTIES
- DESCRIPTION OF EXPOSURE INCIDENT, INCLUDING ROUTES OF EXPOSURE
- RESULT OF SOURCE INDIVIDUAL'S BLOOD TESTING (IF OBTAINABLE)
- COPY OF APPLICABLE MEDICAL RECORDS

SENT BY: _____

Inspection

The OSHA compliance officer will examine the employer's program to determine if the vaccination series and post-exposure follow-up procedures meet the requirements of the standard.

The OSHA compliance officer will determine:

- By means of employer documentation, that all laboratory tests are conducted by a laboratory that is accredited by a national accrediting body (such as College of American Pathologists) or equivalent state agency which participates in a recognized quality assurance program.

- Whether or not all occupationally exposed employees have had the hepatitis B vaccination series made available to them.

- If the employer's post-exposure and follow-up plan provides for immediate and confidential procedures. If the OSHA compliance officer believes that an employer is not properly following accepted post-exposure procedures, the regional BBP coordinator will be contacted.

- If the employer's plan includes a provision for the source individual to refuse blood testing.

- If requirements for consent and confidentiality have been followed.

- If the employer's program offers covered employees all of the listed requirements.

- If the employer contracts for post-exposure follow-up, whether the contractor has been informed of the requirement to preserve the employee's baseline blood collection for at least 90 days.

- If the employer's plan includes providing a copy of this standard to the LHCP responsible for the employee's hepatitis B vaccine.

Hepatitis B Vaccination and Post-Exposure Evaluation and Follow-Up Checklist

1. Have you determined which employees have occupational exposure and are eligible for the hepatitis B vaccination? Yes__ No__

2. Do you provide the hepatitis B vaccine to all employees with occupational exposure:

- Free of charge? Yes__ No__
- At a convenient time and place? Yes__ No__
- In accordance with USPHS recommendations? Yes__ No__
- After the training about the vaccine? Yes__ No__

3. Have you established a mechanism to offer the vaccine to:

- Current employees? Yes__ No__
- New employees within 10 days of their initial assignment? Yes__ No__

4. Do you provide specific training prior to vaccination that includes the:

- Hepatitis B vaccine? Yes__ No__
- Safety, efficacy, and methods of administration? Yes__ No__
- Benefits of vaccination? Yes__ No__
- Right to decline vaccination but still available upon request at a later date? Yes__ No__

5. Do employees who decline vaccination sign a declination statement? Yes__ No__

6a. Have you established a mechanism to obtain a written opinion from the evaluating LHCP on the vaccination status of each employee? Yes__ No__

6b. Is a copy of this written opinion provided to the employee? Yes__ No__

7. Are all other employee health records containing medical findings and diagnoses kept confidential? Yes__ No__

8. Are records maintained of the vaccination status of all employees who have occupational exposure? Yes__ No__

9. Have you defined exposure incidents? Yes__ No__

10. Have you established a mechanism to:

- Document the routes of exposure and circumstances under which all exposure incidents occur? Yes__ No__
- Evaluate exposure incidents that allow corrective action? Yes__ No__

11a. Do you provide a confidential medical evaluation and follow-up immediately following an exposure incident? Yes__ No__

11b. Does it include:

- Evaluation of the exposure incident? Yes__ No__
- Collecting and testing the source individual's blood for HBV and HIV serological status, if not already known? Yes__ No__
- Collecting and testing the employee's blood for HBV and HIV status? Yes__ No__
- Post-exposure prophylaxis, when medically indicated, as recommended by the USPHS at the time of exposure? Yes__ No__
- Counseling? Yes__ No__
- Evaluation of any reported illnesses related to the exposure incident? Yes__ No__

12. Do you provide the employee with information on the results of the source individual's blood testing? Yes__ No__

13. Are there procedures that specify what to do if consent is not obtainable from the source individual? Yes__ No__

14a. Are baseline blood samples from exposed employees who initially decline HIV testing held for 90 days? Yes__ No__

14b. Do you have a policy that provides for testing these samples at the employee's request (within 90 days)? Yes__ No__

15. Do you provide the evaluating LHCP with:

- A copy of the standard? Yes__ No__
- A description of the exposed employee's duties as they relate to the exposure incident? Yes__ No__
- Documentation of the route(s) of exposure and circumstances under which the exposure occurred? Yes__ No__
- Results of the source individual's blood testing, if available? Yes__ No__
- All medical records relevant to treatment of the employee including vaccination status? Yes__ No__

16a. Are you provided with a copy of the evaluating LHCP's written opinion? Yes__ No__

16b. Does it state that the employee was informed about:

- The results of the medical evaluation? Yes__ No__
- Any medical conditions that may arise from exposure that may require further treatment? Yes__ No__

17a. Do you record needlestick injuries and other exposure incidents that result in medical treatment or seroconversion on the OSHA 200 Log and Summary of Occupational Injuries or Illnesses? Yes__ No__

17b. Do you remove identifying information related to the BBP prior to granting access to the records? Yes__ No__

18. Does employee training include:

- Information on the actions taken following an exposure incident? Yes__ No__
- The reporting method? Yes__ No__
- The availability of medical follow-up? Yes__ No__

ELEMENT 5:

COMMUNICATION OF HAZARDS TO EMPLOYEES

Labels and Signs

The Standard

(g) *Communication of hazards to employees*— (1) *Labels and signs.* (i) Labels. (A) Warning labels shall be affixed to containers of regulated waste. refrigerators and freezers containing blood or other potentially infectious material; and other containers used to store. transport or ship blood or other potentially infectious materials. except as provided in paragraph (g)(1)(i)(E). (F) and (G).

(B) Labels required by this section shall include the following legend:

BIOHAZARD

BIOHAZARD

(C) These labels shall be fluorescent orange or orange-red or predominantly so. with lettering or symbols in a contrasting color.

(D) Labels required by affixed as close as feasible to the container by string. wire. adhesive. or other method that prevents their loss or unintentional removal.

(E) Red bags or red containers may be substituted for labels.

(F) Containers of blood. blood components. or blood products that are labeled as to their contents and have been released for transfusion or other clinical use are exempted from the labeling requirements of paragraph (g).

(G) Individual containers of blood or other potentially infectious materials that are placed in a labeled container during storage. transport. shipment or disposal are exempted from the labeling requirement.

(H) Labels required for contaminated equipment shall be in accordance with this paragraph and shall also state which portions of the equipment remain contaminated.

(I) Regulated waste that has been decontaminated need not be labeled or color-coded.

Compliance

Employees must receive sufficient warning through **labels** and **signs** to eliminate or minimize their exposure to blood or OPIM.

Labels

Labels must:

- Include the universal biohazard symbol and the word "Biohazard"
- Be fluorescent orange or orange-red with contrasting symbols or lettering
- Be affixed with a string, wire, adhesive, or other method as close as feasible to:
  - Containers used for regulated waste
  - Contaminated equipment
  - Refrigerators and freezers containing blood or OPIM
  - Other containers used to store, transport, or ship blood or OPIM
  - Clear sharps container liners and sharps container wall cabinets

Red bags or red containers may be substituted for labels.

> **Tip**–Adopt either a single label or color code system. Multiple identification systems for the same hazard increase the chance for accidents.

Tip--These requirements do not preempt either the U.S. Postal Service labeling requirements (39 CFR Part III) or the Department of Transportation's Hazardous Materials Regulation (49 CFR Parts 171-180).

Labels are not required for:

- Containers of blood, blood components, and blood products--bearing an identifying label as specified by the Food and Drug Administration--that have been screened for HBV and HIV antibodies and released for transfusion or other clinical use
- Individual containers of blood or OPIM that are placed in labeled secondary containers (e.g., test tube rack) during storage, transport, shipment, or disposal
- Laundry bags in a facility that uses universal precautions when handling all laundry
- Regulated waste that has been decontaminated by incineration, autoclaving, or chemical means
- Specimen containers that stay in the facility, the contents of which are recognizable as specimens, and universal precautions are used by the facility to handle all specimens

Table 8 depicts the labeling requirements.

(ii) Signs. (A) The employer shall post signs at the entrance to work areas specified in paragraph (e). HIV and HBV Research Laboratory and Production Facilities. which shall bear the following legend:

BIOHAZARD
(Name of the Infectious Agent)
(Special requirements for entering the area)
(Name. telephone number of the laboratory director or other responsible person.)

(B) These signs shall be fluorescent orange-red or predominantly so. with lettering or symbols in a contrasting color.

Signs

Signs must be posted at the entrances to HIV and HBV research laboratories and production facilities. The signs must include:

- Biohazard symbol and word "Biohazard"
- Special requirements for entering the area
- Name of the infectious agent

- Name and telephone number of the laboratory director or other responsible person

These signs must be fluorescent orange-red with lettering or symbols in a contrasting color.

Inspection

Labels and signs. The OSHA compliance officer shall determine that:

- Warning labels are used as required and include the word "Biohazard"

> **Tip**–OSHA does not require or prohibit the use of warning labels or signs indicating known infectivity status of source individuals or specimens although, in accordance with universal precautions, OSHA strongly recommends against such warning signs.

- Adequate decontamination procedures were followed prior to removal of the hazard label

Table 8
Labeling Requirements

Item	No Label Required		Biohazard Label		Red Color-Coded Container
Regulated waste container (e.g., contaminated sharps container)			X	or	X
Reusable contaminated sharps container (e.g., surgical instruments soaking in a tray)			X	or	X
Refrigerator/freezer holding blood or OPIM			X		
Blood/blood products released for clinical use	NO LABELS REQUIRED				
Individual specimen containers of blood or OPIM remaining in facility	X*	or	X	or	X
Specimens shipped from the primary facility to another facility			X	or	X
Individual containers of blood or OPIM placed in labeled container during storage, transport, shipment, or disposal	NO LABELS REQUIRED				
Contaminated equipment needing servicing or shipping (e.g., dialysis equipment; suction apparatus)			X+		
Contaminated laundry	X‡	or	X	or	X
Laundry sent to another facility that does not use universal precautions			X	or	X

* Labels are not required if universal precautions are used in handling all specimens, or containers are recognizable as containing specimens.
\+ Plus a label specifying where the contamination exists.
‡ Alternative labeling or color coding is sufficient when the facility uses universal precautions in handling all soiled laundry and employees can recognize containers as requiring compliance with universal precautions.

Information and Training

The Standard

(2) *Information and Training.* (i) Employers shall ensure that all employees with occupational exposure participate in a training program which must be provided at no cost to the employee and during working hours.

(ii) Training shall be provided as follows:

(A) At the time of initial assignment to tasks where occupational exposure may take place;

(B) Within 90 days after the effective date of the standard; and

(C) At least annually thereafter.

(iii) For employees who have received training on bloodborne pathogens in the year preceding the effective date of the standard, only training with respect to the provisions of the standard which were not included need be provided.

(iv) Annual training for all employees shall be provided within one year of their previous training.

(v) Employers shall provide additional training when changes such as modification of tasks or procedures or institution of new tasks or procedures affect the employee's occupational exposure. The additional training may be limited to addressing the new exposures created.

(vi) Material appropriate in content and vocabulary to educational level, literacy, and language of employees shall be used.

(vii) The training program shall contain at a minimum the following elements:

Compliance

Training of Occupationally Exposed Employees

All employees with occupational exposure must receive *initial* and *annual* training:

- On the hazards associated with blood and OPIM
- On protective measures to be taken to minimize the risk of occupational exposure
- Before placement in positions where occupational exposures may occur
- When tasks, responsibilities, procedures, or work station changes affect the employee's occupational exposure
- At no cost
- At a reasonable time
- At a convenient location
- By a subject matter expert

Training materials must be used--including written materials, oral presentations, films, videos, computer programs, or audiotapes--with content and vocabulary appropriate for the educational level, literacy, and language background of the trainees. If the employee is only proficient in a foreign language, the trainer or an interpreter must convey the information in that foreign language.

At a minimum, the training program must contain the following elements:

- An accessible copy of the regulatory text of this standard and an explanation of its contents
- A general explanation of the epidemiology and symptoms of bloodborne diseases

Tip–The trainer must convey to the employee that a number of bloodborne diseases other than HIV and HBV exist, such as hepatitis C and syphilis. However, the trainer need not cover such uncommon diseases as Cruetzfeld-Jacob disease unless it is appropriate for employees working in a research facility with that particular virus.

- An explanation of the modes of transmission of BBP
- An explanation of the employer's ECP and the means by which the employee can obtain a copy of the written plan
- An explanation of the appropriate methods for recognizing tasks and other activities that may involve exposure to blood and OPIM
- An explanation of the use and limitations of methods that will prevent or reduce exposure including appropriate engineering controls, work practices, and personal protective equipment
- Information on types, proper use, location, removal, handling, decontamination and disposal of personal protective equipment
- An explanation of the basis for selection of personal protective equipment
- Information on the hepatitis B vaccine, including information on its efficacy, safety, method of administration, the benefits of being vaccinated, and an explanation that the vaccine and vaccination will be offered free of charge
- Information on the appropriate actions to take and persons to contact in an emergency involving blood or OPIM

Tip—"Emergency" refers to blood or OPIM exposure outside the normal scope of work. It does not refer to hospital emergency rooms or emergency medical technicians' work.

- An explanation of the procedure to follow if an exposure incident occurs, including the method of reporting the incident and the medical follow-up that will be made available
- Information on the post-exposure evaluation and follow-up that the employer is required to provide for the employee following an exposure incident
- An explanation of the labels and signs and/or color coding required by the standard
- An opportunity for interactive questions and answers with the person conducting the training session

Tip—Training the employees solely by film or video without a discussion period is insufficient. Also, a generic computer program, even an interactive one, is not considered appropriate unless:

- The employer supplements the training with the site-specific information required (e.g., the location of the exposure control plan and the procedures to be followed if an exposure incident occurs)
- A person is accessible for interaction

All training elements must be covered; however, training is performance oriented, so flexibility is permitted to tailor the program to an employee's background and responsibilities. Site-specific training is therefore incorporated.

(viii) The person conducting the training shall be knowledgeable in the subject matter covered by the elements contained in the training program as it relates to the workplace that the training will address.

The Trainer

The person conducting the training must:

- Be knowledgeable in all training program elements based on the completion of specialized courses, degree programs, or work experience
- Be familiar with the manner in which the training program elements relate to the particular workplace being addressed

Tip--Possible trainers include a variety of healthcare professionals such as:

- Infection control practitioners
- Nurse practitioners
- Registered nurses
- Physicians
- Physician's assistants
- Emergency medical technicians

Nonhealthcare professionals--such as industrial hygienists, epidemiologists, safety and occupational health specialists or managers, and professional trainers--may conduct the training if they've received specialized training in BBPs.

In some workplaces, such as dental or physicians' offices, individual employers may conduct the training if they are familiar with blood and OPIM exposure control.

Tip--Employees must also receive appropriate hazard communication training as required by 29 CFR 1910.1200 for other occupational exposures, toxic chemicals, etc. These two trainings can be completed at the same time provided training content and recordkeeping requirements of both regulations are met.

(ix) Additional Initial Training for Employees in HIV and HBV Laboratories and Production Facilities. Employees in HIV or HBV research laboratories and HIV or HBV production facilities shall receive the following initial training in addition to the above training requirements.

(A) The employer shall assure that employees demonstrate proficiency in standard microbiological practices and techniques and in the practices and operations specific to the facility before being allowed to work with HIV or HBV.

(B) The employer shall assure that employees have prior experience in the handling of human pathogens or tissue cultures before working with HIV or HBV.

(C) The employer shall provide a training program to employees who have no prior experience in handling human pathogens. Initial work activities shall not include the handling of infectious agents. A progression of work activities shall be assigned as techniques are learned and proficiency is developed. The employer shall assure that employees participate in work activities involving infectious agents only after proficiency has been demonstrated.

Additional Training for Employees in HIV and HBV Laboratories and Production Facilities

Employees of HIV and HBV laboratories and production facilities must receive the training outlined above. In addition, before working with HIV or HBV, these employees must:

- Demonstrate proficiency in standard microbiological practices and techniques and in the practices and operations specific to their facility prior to work assignment

Tip--"Proficiency" means that employees who are experienced laboratorians may not need to be retrained. Also, education such as a graduate degree in the study of HIV or HBV, or another closely related subject area with a period of related laboratory research experience, constitutes proficiency. It is the employer's responsibility to evaluate the employees' proficiency and to document the mechanism used to determine proficiency.

- Have prior experience in the handling of human pathogens or tissue cultures

Provide training for employees with no prior experience handling human pathogens prior to their participation in work activities involving infectious agents. Assign a progression of work activities as techniques are learned and proficiency is developed.

Inspection

Information and Training. The OSHA compliance officer shall verify that training on the hazards associated with blood and OPIM, and the protective measures to be taken to minimize the risk of occupational exposure, is provided:

- By a competent trainer
- In a manner appropriate to the employees' education, literacy level, and language
- With the opportunity for interactive questions and answers
- At the time of initial employment and at least annually thereafter
- Whenever a change in responsibilities, procedures, or work situation affects an employee's occupational exposure
- On the sections of the standard not included in the training that employees received within the year preceding March 6, 1992
- To part-time and temporary employees and per diem on call employees. Unpaid workers such as medical students and interns should be included in the installation or another equivalent program if they perform work in the facility that could include exposure to BBP.
- To laboratory and production facility employees

Communication of Hazards to Employees Checklist

1. Is the universal biohazard symbol always used in conjunction with the word "Biohazard"? Yes__ No__

2. Do you have written procedures that outline the specific labeling required for:

- Specimens if universal precautions are not observed for handling all specimens? Yes__ No__
- Laundry bags if universal precautions are not observed for handling all laundry? Yes__ No__
- Refrigerators and freezers that contain blood or OPIM? Yes__ No__
- Containers used to store, transport, or ship regulated waste, blood, or OPIM? Yes__ No__
- Sharps disposal containers? Yes__ No__
- Contaminated equipment that is sent for servicing or repair? Yes__ No__

3. Is training provided to all current employees? Yes__ No__

4. Is training provided to all new employees at the time of their initial employment? Yes__ No__

5. Are all employees with occupational exposure provided training:

- Free of charge? Yes__ No__
- During work hours? Yes__ No__
- At a reasonable location? Yes__ No__
- By an individual who is knowledgeable in the subject matter? Yes__ No__

6. Does the training include:

- An accessible copy of the regulatory text of the standard? Yes__ No__
- A general explanation of the epidemiology and symptoms of BBP? Yes__ No__
- An explanation of your ECP and the means by which an employee can obtain a copy of the written plan? Yes__ No
- An explanation of the appropriate methods for recognizing tasks and other activities that may involve exposure to blood and OPIM? Yes__ No__
- An explanation of the use and limitations of methods that will prevent or reduce exposure including appropriate engineering controls, work practices, and PPE? Yes__ No__
- Information on the types, proper use, location, removal, handling, decontamination, and disposal of PPE? Yes__ No__
- An explanation of the basis for selecting PPE? Yes__ No__
- Information on the hepatitis B vaccine, including information on its efficacy, safety, method of administration, benefits of vaccination, and an explanation that the vaccine and vaccination are free of charge? Yes__ No__
- Information on the appropriate actions to take and persons to contact during an emergency involving blood or OPIM? Yes__ No__
- An explanation of the procedure to follow if an exposure incident occurs, including the method of reporting the incident and the medical follow-up that is available? Yes__ No__
- Information on the post-exposure evaluation and follow-up the employer is required to provide for the employee following an exposure incident? Yes__ No__

- An explanation of signs, labels, and/or color coding used to identify hazards? Yes__ No__

- An opportunity for interactive questions and answers with the trainer? Yes__ No__

7. Is the training appropriate in content, language, and vocabulary to employees' educational, literacy, and language background? Yes__ No__

ELEMENT 6:

RECORDKEEPING

Recordkeeping

The Standard

(h) *Recordkeeping—(1) Medical Records.* (i) The employer shall establish and maintain an accurate record for each employee with occupational exposure, in accordance with 29 CFR 1910.20.

(ii) This record shall include:

(A) The name and social security number of the employee:

(B) A copy of the employee's hepatitis B vaccination status including the dates of all the hepatitis B vaccinations and any medical records relative to the employee's ability to receive vaccination as required by paragraph (f)(2):

(C) A copy of all results of examinations, medical testing, and follow-up procedures as required by paragraph (f)(3):

(D) The employer's copy of the healthcare professional's written opinion as required by paragraph (f)(5): and

(E) A copy of the information provided to the healthcare professional as required by paragraphs (f)(4)(ii)(B)(C) and (D).

(iii) Confidentiality. The employer shall ensure that employee medical records required by paragraph (h)(1) are:

(A) Kept confidential: and

(B) Are not disclosed or reported without the employee's express written consent to any person within or outside the workplace except as required by this section or as may be required by law.

(iv) The employer shall maintain the records required by paragraph (h) for at least the duration of employment plus 30 years in accordance with 29 CFR 1910.20.

Compliance

Medical Records

Establish and maintain an accurate record for each employee with occupational exposure. These records are required for training, medical evaluations, treatment, and surveillance, and must include:

- The employee's name and Social Security number
- A copy of the employee's hepatitis B vaccination status including the dates of all the hepatitis B vaccinations and any medical records relative to the employee's ability to receive vaccination or the vaccination declination statement
- A copy of all results of examinations, medical testing, and follow-up procedures
- The employer's copy of the LHCP's written opinion
- A copy of the information provided to the LHCP

Keep all records confidential unless:

- The employee expressly consents disclosure--in writing
- Disclosure is required by this standard or other federal, state, or local regulations

Tip—All medical records required to be kept by this standard must be made available to OSHA.

See the sample authorization letter for release of an employee's medical record information to a designated representative (nonmandatory).

Retain records for the duration of employment plus 30 years.

Assure employees access to their own individual medical records in accordance with 29 CFR 1910.20.

SAMPLE AUTHORIZATION LETTER FOR
RELEASE OF AN EMPLOYEE'S MEDICAL RECORD INFORMATION
TO A DESIGNATED REPRESENTATIVE (NONMANDATORY)

I, _____ (full name of worker/patient), hereby authorize _____ (individual or organization holding the medical records) to release to _____ (individual or organization authorized to receive the medical information), the following medical information from my personal medical records:

_____

_____

(Describe generally the information desired to be released.)

I give my permission to use this medical information for the following purpose:

_____

_____

I **do not** give permission for any other use or redisclosure of this information.

Space is provided below so you can place additional restrictions on this authorization letter. You may leave these lines blank or you may want to (1) specify a particular expiration date for this letter (if less than one year); (2) describe medical information created in the future which you intend is covered by this authorization letter; or (3) describe portions of the medical information in your records which you do not intend for release as a result of this letter.

_____

_____

_____

_____

_____
Full Name of Employee or Legal Representative

_____
Signature of Employee or Legal Representative

_____
Date of Signature

(2) *Training Records. (i) Training records shall include the following information:*
(A) The dates of the training sessions:
(B) The contents or a summary of the training sessions:
(C) The names and qualifications of persons conducting the training: and
(D) The names and job titles of all persons attending the training sessions.
(ii) Training records shall be maintained for 3 years from the date on which the training occurred.

Training Records

The employer, via the trainer or respective department (e.g., Department of Nursing), must fully document all training sessions accurately. Training records must include:

- The dates of the training sessions
- The contents or a summary of the training sessions
- The names and qualifications of the persons conducting the training
- The names and job titles of all persons attending the training sessions

A sample documented training session with explanations is provided.

Retain training records for three years from the date on which the training occurred and in a location readily accessible for review by evaluators or inspectors.

(3) *Availability.* (i) The employer shall ensure that all records required to be maintained by this section shall be made available upon request to the Assistant Secretary and the Director for examination and copying.
(ii) Employee training records required by this paragraph shall be provided upon request for examination and copying to employees, to employee representatives, to the Director, and to the Assistant Secretary in accordance with 29 CFR 1910.20.
(iii) Employee medical records required by this paragraph shall be provided upon request for examination and copying to the subject employee, to anyone having written consent of the subject employee, to the Director, and to the Assistant Secretary in accordance with 29 CFR 1910.20.
(4) *Transfer of Records.* (i) The employer shall comply with the requirements involving transfer of records set forth in 29 CFR 1910.20(h).
(ii) If the employer ceases to do business and there is no successor employer to receive and retain the records for the prescribed period, the employer shall notify the Director, at least three months prior to their disposal and transmit them to the Director, if required by the Director to do so, within that three month period.

Tip—Training records are not considered to be confidential and may be maintained in any file.

As part of the contract for services, consider maintaining a copy of the training records in your facility to check the contractor's obligation to comply with federal standards and the contract provisions.

All records must be made available to the Assistant Secretary and the Director upon request. Also, allow employees access to their own individual training records for examination and copying.

Transfer of Records

If the employer ceases to do business, and there is no successive employer to receive and retain the medical and training records for the prescribed period, the employer must notify the Director at least three months prior to their disposal for a determination as to disposition.

SAMPLE
INITIAL/ANNUAL TRAINING SESSION

DATE: 2 June 1992

TOPIC: Labeling Requirements for BBP

TRAINER: Mr. Henry, Safety and Occupational Health Manager

ATTENDEES:

Mrs. Dean	Housekeeper (Waste Collector)
MAJ Jones	Pathologist
Ms. Day	Contract Laundry Handler
Mr. Johnson	Food Service Supervisor
Miss Cane	Medical Maintenance Technician
CPT Largo	Chief, Patient Administration Division (PAD)
Mrs. Hardy	O.R. Nurse

1. Is the above training properly/completely documented?

Yes. All elements are satisfied: date of training session, contents or a summary of training, the trainer's name and qualifications, and trainees' names and job titles.

2. All attendees were determined as occupationally exposed in their current positions. Was the exposure determination accurate?

No. The attendance of two of the trainees was unnecessary.

Who? The food service supervisor and chief, PAD. Neither employee needs training in BBP while in their current positions because they truly are *not* occupationally exposed.

3. Since the laundry services are contracted to an off-site facility, Ms. Day's presence is not required in our training sessions--right?

Right. Ms. Day is a multi-employer employee. Her primary employer is responsible for implementing the standard's requirements to its occupationally exposed employees. Additionally, as employer you are responsible for controlling hazards in your facility. Since Ms. Day is occupationally exposed to BBP via contaminated laundry, she must wear appropriate PPE. If she is observed not wearing or improperly wearing PPE, you are responsible for rectifying the deficiency on the spot. You must inform/train the employee and follow through to her primary employer via the contracting officer's representative. OSHA will cite both you and her employer if the above efforts are not made.

Inspection

The OSHA compliance officer will review the recordkeeping program to ensure:

- The required information is being collected
- The confidentiality of the medical records

Recordkeeping Checklist

1. Have you established a mechanism for creating and maintaining confidential medical records for each employee with occupational exposure? Yes__ No__

2. Do the medical records include:

- An evaluation of the indications and contraindications for the hepatitis B vaccination? Yes__ No__
- A medical evaluation of exposure incidents? Yes__ No__
- Results of employee HIV and HBV serologic testing? Yes__ No__
- Counseling information? Yes__ No__
- Post-exposure prophylaxis? Yes__ No__
- An evaluation of any reported illness related to exposure incidents? Yes__ No__

3. Do the employer records for each employee with occupational exposure contain:

- The employee's name and Social Security number? Yes__ No__
- Indications for the hepatitis B vaccination and the date of vaccination, if received? Yes__ No__
- Signed declination statements? Yes__ No__
- Routes and circumstances of all exposure incidents? Yes__ No__
- Results of source individual's blood testing, if available? Yes__ No__
- Documentation showing the employee was informed of the evaluation of post-exposure medical evaluation results and the need for follow-up? Yes__ No__

4. Do you keep the employee's personnel records separate from the confidential medical records? Yes__ No__

5. Do employees have access to their medical records? Yes__ No__

6. Is training documented? Yes__ No__

7. Do training records include:

- Training session dates? Yes__ No__
- Contents or a summary of the training session? Yes__ No__
- Names and qualifications of the trainer(s)? Yes__ No__
- Names and job titles of all training attendees? Yes__ No__

8. Are training records retained for 3 years from the training date? Yes__ No__

9. Are the records accessible to employees? Yes__ No__

10. Are the records available to the Assistant Secretary and the Director? Yes__ No__

THE OSHA COMPLIANCE INSPECTION

THE OSHA COMPLIANCE INSPECTION

Q. *What do you do if an OSHA compliance officer walks into your office and asks to inspect your facility?*

A. *With some forethought and advance preparation, you can eliminate or minimize errors that usually take place during an OSHA inspection.*

Before allowing the inspection to begin:

- Contact the OSHA area office to verify the inspector's employment and assignment to your facility.
- Notify HSC headquarters, Office of Accident Prevention (HSAP) DSN 471-6838/8101.
- Photocopy the inspector's credentials and supporting documents.

Ask the officer the type of inspection intended:

- Imminent danger inquiry?
- Fatality inspection?
- Complaint?
- Referral?
- General programmed inspection?

Limit the inspector's access to only those areas within the scope of the inspection warrant.

Instruct all managers and supervisors to:

- Periodically review all safety and exposure control policies and procedures with their employees
- Consult with their immediate supervisor or refer to the BBP (ECP) program if the inspector asks a question they cannot answer

If the inspector requests employee interviews, inform all employees:

- They may choose to be interviewed in private or request the presence of a representative of the employer or union
- They have the right to refuse to be interviewed
- You would like to be present during any interviews with the inspector

When inspecting Army installations, OSHA uses the General Industry Standards and *key sections* of the Basic Program Elements for Federal Employee Occupational Safety and Health Programs (29 CFR 1960):

- Posting of notices (1960.26)
- Notifying higher authority when assistance is needed for abatement (1960.30)
- Equal representation of management and nonmanagement on safety committees (1960.37)
- Employee training (1960.56, 57, 58, and 59)

Opening Conference

Prior to the opening conference, prepare yourself to tell the inspector:

- The ways in which your BBP (ECP) program is communicated and enforced
- The procedures used to investigate accidents
- The types of personal protective equipment present in your facility

The knowledge and self-assurance you display in answering may reduce the number of questions asked by the inspector.

Be sure to identify all outside contractors that are present in your facility. The contractor may be cited for a violation that he controls or creates.

Records Review

Provide the inspector access to your written programs and records:

- Written safety program
- Accident and injury records
- Employee exposure and medical monitoring records
- Hazard communication program
- Bloodborne pathogens program (ECP)
- Respiratory protection program

Walk-Around Inspection

Once the inspector has completed the records review, the walk-around inspection will begin:

- Provide the inspector with the appropriate personal protective equipment
- Brief the inspector on your facility's safety guidelines, emergency procedures, and exposure incident procedures before allowing the inspector to enter any work area
- Accompany the inspector at all times
- Carry a camera and take photographs of everything photographed by the inspector
- Take detailed notes concerning the areas inspected, any measurements taken, the measurement devices used, employees interviewed, etc.

Demonstrate your "good faith in compliance" by making on-the-spot corrections whenever possible. However, you may still receive a notice of violation for a violation that is immediately corrected.

Closing Conference

During the closing conference, ask:

- What the inspector thinks are the strengths or weaknesses of your BBP (ECP) program
- Precisely what items/areas the inspector plans to recommend for citations
- What are the abatement dates for the "apparent" violation?
- If the inspector has completed his inspection and, if not, what specifically remains

For detailed information on OSHA's inspection process, citations, penalties, and appeals, obtain a copy of *OSHA Inspections* (OSHA 2098, 1992 revised) by contacting your nearest regional OSHA office.

GLOSSARY

GLOSSARY - ABBREVIATIONS

ADA	American Dental Association
AFSCME	American Federation of State, County, and Municipal Employees
AHA	American Hospital Association
AIDS	acquired immunodeficiency syndrome
AMA	American Medical Association
ANSI	American National Standards Institute
APIC	Association for Practitioners in Infection Control
BBP	bloodborne pathogens
BSI	body substance isolation
BSC	biological safety cabinet
CDC	Centers for Disease Control and Prevention
DASG	Department of the Army Surgeon General
DENTAC	dental activity
ECP	exposure control plan
FDA	Food and Drug Administration
fpm	feet per minute
gpm	gallon(s) per minute
HAZCOM	hazard communication
HBV	hepatitis B virus
HEPA	high efficiency particulate air
HIV	human immunodeficiency virus
IMA	installation medical authority

lfm	linear feet per minute
LHCP	licensed healthcare professional
lpm	liter(s) per minute
MEDCEN	medical center
MEDDAC	medical department activity
MMWR	*Morbidity and Mortality Weekly Report*
MSDS	material safety data sheet
NIH	National Institutes of Health
NIOSH	National Institute for Occupational Safety and Health
OPIM	other potentially infectious materials
OR	operating room
OSHA	Occupational Safety and Health Administration
PPE	personal protective equipment
SJA	Staff Judge Advocate
TG	technical guide
μm	micron
USAEHA	United States Army Environmental Hygiene Agency
USDHHS	United States Department of Health and Human Services
USEPA	United States Environmental Protection Agency
USPHS	United States Public Health Service
WRAMC	Walter Reed Army Medical Center

GLOSSARY - TERMS

Acquired immunodeficiency syndrome
An illness in which the body's ability to defend itself against certain diseases or medical conditions is impaired. AIDS is caused by a specific type of virus known as HIV. AIDS represents the most serious presentation of HIV.

Amniotic fluid
The watery fluid that surrounds the fetus or unborn child in the uterus.

Assistant Secretary
The Assistant Secretary of Labor for Occupational Safety and Health, or designated representative.

Biohazard label
A label affixed to containers of regulated waste, refrigerators and freezers, and other containers used to store, transport, or ship blood or OPIM. The label must be fluorescent orange-red in color with the biohazard symbol and the word "biohazard" on the lower part of the label.

Biological safety cabinet
A primary containment device to provide for employee, environment, and product protection and to provide for a work environment free from extraneous contaminants.

Blood
Human blood, human blood components, and products made from human blood. The term "human blood components" includes plasma, platelets, and serosanguineous fluids (e.g, exudates from wounds).

Bloodborne pathogens
Pathogenic microorganisms that are present in human blood and can cause disease in humans. These pathogens include, but are not limited to, HBV and HIV. While HBV and HIV are specifically identified in the standard, the term includes any pathogenic microorganism that is present in human blood and can infect and cause disease in persons who are exposed to blood containing the pathogen. Other examples include hepatitis C, malaria, syphilis, babesiosis, brucellosis, leptospirosis, arboviral infections, relapsing fever, Creutzfeld-Jacob disease, Human T-lymphotrophic Virus Type 1, and viral hemorrhagic fever.

Body fluids
Fluids that the body makes, such as blood, semen, vaginal secretions, and breast milk.

Body substance isolation
Incorporates the fluids and materials covered by the standard, and expands coverage to *all* body fluids and substances.

Centers for Disease Control and Prevention
Federal health agency that is a branch of the USDHHS. The CDC provides national health and safety guidelines and statistical data on AIDS and other diseases.

Cerebrospinal fluid
Serum-like fluid that bathes the lateral brain ventricles and the spinal cord cavity.

Clinical laboratory
A workplace where diagnostic or other screening procedures are performed on blood or OPIM.

Contaminated
The presence, or the reasonably anticipated presence, of blood or OPIM on an item or surface.

Contaminated laundry
Laundry that has been soiled with blood or OPIM or may contain sharps.

Contaminated sharps
Any contaminated object that can penetrate the skin including, but not limited to, needles, scalpels, broken glass, broken capillary tubes, and exposed ends of dental wires.

Cutaneous
Introduced to or affecting the skin (e.g., cutaneous exposure/prolonged contact with large amounts of blood).

Decontamination
The use of physical or chemical means to remove, inactivate, or destroy BBP on a surface or item to the point where they are no longer capable of transmitting infectious particles and the surface or item is rendered safe for handling, use, or disposal.

Director
The Director of NIOSH, USDHHS, or designated representative.

Disinfect
To free from pathogenic organisms or to render them inert.

Employee
An individual employed in a healthcare, industrial, or other facility or operation who may be exposed to BBPs in the course of their assignments.

Employer
An individual(s) who exchanges financial compensation for specific tasks performed by another individual.

Engineering controls
Controls such as sharps disposal containers and self-sheathing needles that isolate or remove the bloodborne pathogens hazard from the workplace.

Epidemiology
The study of the incidence, distribution, and control of a disease in a population.

Exposure control officer/personnel
Employee(s) who is designated by the employer, and who is qualified by training and experience, to provide technical guidance in the development and implementation of the facility's exposure control plan.

Exposure control plan
A written plan developed and implemented by the employer that sets forth procedures, engineering and work practice controls, PPE, and other methods that are capable of protecting employees from exposures to BBP, and meets the requirements spelled out by the OSHA BBP standard.

Exposure incident
A specific eye, mouth, or other mucous membrane, nonintact skin, or parenteral contact with blood or OPIM that results from the performance of an employee's duties. "Non-intact skin" includes skin with dermatitis, hangnails, cuts, abrasions, chafing, etc.

Handwashing facility
A facility providing an adequate supply of running potable water, soap, and single-use towels or hot-air drying machines.

Healthcare
Encompassing medical and dental settings.

Healthcare workers
Persons, including students and trainers, whose activities involve contact with patients or with blood or OPIM from patients in a healthcare setting.

Hepatitis B Virus
A viral infection that affects the liver. The effects of the disease on the liver can range from mild, even inapparent, to severe or fatal.

High efficiency particulate air (HEPA) filter
A filter that is a minimum of 99.97% effective at 0.3 micron.

Human immunodeficiency virus
A viral infection, present in the blood and other body fluids, that causes AIDS. The name was given to the virus because it infects humans and grows in white blood cells (T-lymphocytes) which fight infections.

Installation medical authority
The unit surgeon, command chief surgeon, MEDDAC, DENTAC, and/or MEDCEN commanders, and the director, health services, or his/her representative responsible for provision of medical support at the unit, command, or installation concerned.

Invasive procedure
The surgical entry into tissues, cavities, or organs or the repair of major traumatic injuries in (1) an operating or delivery room, emergency department, or outpatient setting, including both physicians' and dentists' offices; (2) cardiac catheterization and angiographic procedures; (3) a vaginal or cesarean delivery or other invasive obstetric procedure during which bleeding may occur; or (4) the manipulation, cutting, or removal of any oral or perioral tissues, including tooth structure, during which bleeding occurs or the potential for bleeding exists.

Laminar airflow
Unidirectional airflow through the work area often referred to as: (1) turbulence-free airflow, (2) steady, unidirectional micro-turbulence flow, or (3) mass airflow.

Licensed healthcare professional
A person whose legally permitted scope of practice allows him/her to independently perform the activities required for hepatitis B vaccination and post-exposure evaluation and follow-up.

Medical consultation
A consultation that takes place between an employee and a licensed medical professional for the purpose of determining the employee's medical condition resulting from exposure to blood or OPIM.

Morbidity and Mortality Weekly Report
A CDC weekly publication that gives information on current trends in the nation's health.

Nonintact skin
Skin that is chapped, abraded, weeping, or has rashes or eruptions.

Occupational exposure
Reasonably anticipated skin, eye, mucous membrane, or parenteral contact with blood or OPIM that may result from the performance of an employee's duties, but not necessarily being infected by a disease-causing agent. Also, cutaneous exposure involving large amounts of blood or prolonged contact with blood--especially when the skin is chapped, abraded, or afflicted with dermatitis. The term "reasonably anticipated" includes the potential for exposure as well as actual exposure. Lack of history of blood exposures among first-aid personnel of a particular manufacturing site, for instance, does not preclude coverage. This definition does not cover "good Samaritan" acts that result in exposure to blood or OPIM from assisting a fellow employee, although OSHA encourages employers to offer follow-up procedures in such cases.

Other potentially infectious materials (OPIM)
Semen, vaginal secretions, cerebrospinal fluid, synovial fluid, pleural fluid, pericardial fluid, peritoneal fluid,. amniotic fluid, saliva in dental procedures, any body fluid that is visibly contaminated with blood, and all body fluids in situations where it is difficult or impossible to differentiate between body fluids; any unfixed tissue or organ (other than intact skin) from a human (living or dead); HIV-containing cell or tissue cultures, organ cultures, and HIV- or HBV-containing culture medium or other solutions; and blood, organs, or other tissues from experimental animals infected with HIV or HBV. Coverage under this definition also extends to blood and tissues of animals that are deliberately infected with HIV or HBV.

Other workers
Persons, including students and trainers, whose activities involve contact with blood or OPIM from people in other than healthcare settings.

Parenteral
Piercing mucous membranes or the skin barrier through such events as needlesticks, human bites, cuts, and abrasions. This definition includes human bites that break the skin, which are most likely to occur in violent situations such as may be encountered by prison personnel and police and in emergency rooms or psychiatric wards.

Pathogen
A disease-causing substance.

Percutaneously
Entering the body through the skin (e.g., by needlestick).

Pericardial fluid
A clear fluid contained in the thin, membranous sac that surrounds the heart.

Peritoneal fluid
Fluid contained in the membrane lining of the abdominal cavity.

Personal protective equipment
Specialized clothing or equipment worn by an employee for protection against a hazard. General work clothes (e.g., uniforms, pants, shirts, and blouses) not intended to function as protection against a hazard are not considered personal protective equipment.

Pleural fluid
Fluid contained in the membrane that covers the lung and lines the chest cavity.

Production facility
A facility engaged in industrial-scale, large-volume or high-concentration production of HIV or HBV.

Prophylaxis
Any substance or step taken to prevent something from happening (e.g., condoms, vaccines).

Recordable cases
All work-related deaths and illnesses, and those work-related injuries that result in loss of consciousness, restriction of work or motion, transfer to another job, or medical treatment beyond first aid.

Regulated waste
Also known as regulated medical waste, infectious waste, and infective waste. OSHA defined as liquid or semi-liquid blood or OPIM; contaminated items that would release blood or OPIM in a liquid or semi-liquid state if compressed; items that are caked with dried blood or OPIM and are capable of releasing these materials during handling; contaminated sharps; and pathological and microbiological wastes containing blood or OPIM.

Research laboratory
A laboratory producing or using research-laboratory-scale amounts of HIV or HBV. Research laboratories may produce high concentrations of HIV or HBV, but not in the volume found in production facilities.

Sharps
Needles, scalpels, pipettes, broken glass or plastic, exposed ends of dental wires, broken capillary tubes, and other devices that can cut or pierce the skin.

Source individual
Any individual, living or dead, whose blood or OPIM may be a source of occupational exposure to an employee. Examples include, but are not limited to, hospital and clinic patients, clients in institutions for the developmentally disabled, trauma victims, clients of drug and alcohol treatment facilities, residents of hospices and nursing homes, human remains, and individuals who donate or sell blood or blood components.

Standard microbiological practices
Practices and techniques required for employees to handle infectious agents or infected materials safely and proficiently. The employer is responsible for providing or arranging for appropriate training of personnel and for informing employees of potential hazards.

Sterilize
The use of a physical or chemical procedure (steam, gas, or liquid agents) to destroy all microbial life including highly resistant bacterial endospores.

Subcutaneous
Beneath or introduced beneath the skin (e.g., subcutaneous injections).

Symptomatology
The study of the signs of disease when a disease-causing agent is in the body.

Syndrome
A collection of signs and symptoms that occur together.

Synovial fluid
Clear, viscid lubricating fluid secreted by membranes in joint cavities, sheaths of tendons, and bursae.

Tuberculocidal
Capable of killing a moderately resistant bacterium, Mycobacterium tuberculosis var. Bovis. This organism is one used in laboratory tests to classify disinfectant chemicals according to their strength.

Universal precautions
An approach to infection control where all human blood and certain human body fluids are treated as if known to be infectious for HIV, HBV, and other BBP.

Vaccine
A substance that produces or increases immunity and protection against a particular disease.

Viral titer
The concentration of a viral substance in solution or the strength of the substance determined by titration; the minimum volume needed to cause a particular result in titration.

Work practice controls
Controls that reduce the likelihood of exposure by altering the manner in which a task is performed (e.g., prohibiting two-handed needle recapping).

MODULE 2:

THE STANDARD

(29 CFR 1910.1030)

12-6-91
Vol. 56 No. 235
Pages 63861-64186

federal register

Friday
December 6, 1991

XI. The Standard

General Industry

Part 1910 of title 29 of the Code of Federal Regulations is amended as follows:

PART 1910—[AMENDED]

Subpart Z—[Amended]

1. The general authority citation for subpart Z of 29 CFR part 1910 continues to read as follows and a new citation for § 1910.1030 is added:

Authority: Secs. 6 and 8, Occupational Safety and Health Act, 29 U.S.C. 655, 657, Secretary of Labor's Orders Nos. 12-71 (36 FR 8754), 8-76 (41 FR 25059), or 9-83 (48 FR 35736), as applicable; and 29 CFR part 1911.

* * * * *

Section 1910.1030 also issued under 29 U.S.C. 653.

* * * * *

2. Section 1910.1030 is added to read as follows:

§ 1910.1030 Bloodborne Pathogens.

(a) *Scope and Application.* This section applies to all occupational exposure to blood or other potentially infectious materials as defined by paragraph (b) of this section.

(b) *Definitions.* For purposes of this section, the following shall apply:

Assistant Secretary means the Assistant Secretary of Labor for Occupational Safety and Health, or designated representative.

Blood means human blood, human blood components, and products made from human blood.

Bloodborne Pathogens means pathogenic microorganisms that are present in human blood and can cause disease in humans. These pathogens include, but are not limited to, hepatitis B virus (HBV) and human immunodeficiency virus (HIV).

Clinical Laboratory means a workplace where diagnostic or other screening procedures are performed on blood or other potentially infectious materials.

Contaminated means the presence or the reasonably anticipated presence of blood or other potentially infectious materials on an item or surface.

Contaminated Laundry means laundry which has been soiled with blood or other potentially infectious materials or may contain sharps.

Contaminated Sharps means any contaminated object that can penetrate the skin including, but not limited to, needles, scalpels, broken glass, broken capillary tubes, and exposed ends of dental wires.

Decontamination means the use of physical or chemical means to remove, inactivate, or destroy bloodborne pathogens on a surface or item to the point where they are no longer capable of transmitting infectious particles and the surface or item is rendered safe for handling, use, or disposal.

Director means the Director of the National Institute for Occupational Safety and Health, U.S. Department of Health and Human Services, or designated representative.

Engineering Controls means controls (e.g., sharps disposal containers, self-sheathing needles) that isolate or remove the bloodborne pathogens hazard from the workplace.

Exposure Incident means a specific eye, mouth, other mucous membrane, non-intact skin, or parenteral contact with blood or other potentially infectious materials that results from the performance of an employee's duties.

Handwashing Facilities means a facility providing an adequate supply of running potable water, soap and single use towels or hot air drying machines.

Licensed Healthcare Professional is a person whose legally permitted scope of practice allows him or her to independently perform the activities required by paragraph (f) Hepatitis B Vaccination and Post-exposure Evaluation and Follow-up.

HBV means hepatitis B virus.

HIV means human immunodeficiency virus.

Occupational Exposure means reasonably anticipated skin, eye, mucous membrane, or parenteral contact with blood or other potentially infectious materials that may result from the performance of an employee's duties.

Other Potentially Infectious Materials means

(1) The following human body fluids: semen, vaginal secretions, cerebrospinal fluid, synovial fluid, pleural fluid, pericardial fluid, peritoneal fluid, amniotic fluid, saliva in dental procedures, any body fluid that is visibly contaminated with blood, and all body fluids in situations where it is difficult or impossible to differentiate between body fluids;

(2) Any unfixed tissue or organ (other than intact skin) from a human (living or dead); and

(3) HIV-containing cell or tissue cultures, organ cultures, and HIV- or HBV-containing culture medium or other solutions; and blood, organs, or other tissues from experimental animals infected with HIV or HBV.

Parenteral means piercing mucous membranes or the skin barrier through such events as needlesticks, human bites, cuts, and abrasions.

Personal Protective Equipment is specialized clothing or equipment worn by an employee for protection against a hazard. General work clothes (e.g., uniforms, pants, shirts or blouses) not intended to function as protection against a hazard are not considered to be personal protective equipment.

Production Facility means a facility engaged in industrial-scale, large-volume or high concentration production of HIV or HBV.

Regulated Waste means liquid or semi-liquid blood or other potentially infectious materials; contaminated items that would release blood or other potentially infectious materials in a liquid or semi-liquid state if compressed; items that are caked with dried blood or other potentially infectious materials and are capable of releasing these materials during handling; contaminated sharps; and pathological and microbiological wastes containing blood or other potentially infectious materials.

Research Laboratory means a laboratory producing or using research-laboratory-scale amounts of HIV or HBV. Research laboratories may produce high concentrations of HIV or HBV but not in the volume found in production facilities.

Source Individual means any individual, living or dead, whose blood or other potentially infectious materials may be a source of occupational exposure to the employee. Examples include, but are not limited to, hospital and clinic patients; clients in institutions for the developmentally disabled; trauma victims; clients of drug and alcohol treatment facilities; residents of hospices and nursing homes; human remains; and individuals who donate or sell blood or blood components.

Sterilize means the use of a physical or chemical procedure to destroy all microbial life including highly resistant bacterial endospores.

Universal Precautions is an approach to infection control. According to the concept of Universal Precautions, all human blood and certain human body fluids are treated as if known to be infectious for HIV, HBV, and other bloodborne pathogens.

Work Practice Controls means controls that reduce the likelihood of exposure by altering the manner in which a task is performed (e.g., prohibiting recapping of needles by a two-handed technique).

(c) *Exposure control*—(1) *Exposure Control Plan.* (i) Each employer having an employee(s) with occupational exposure as defined by paragraph (b) of this section shall establish a written Exposure Control Plan designed to

eliminate or minimize employee exposure.

(ii) The Exposure Control Plan shall contain at least the following elements:

(A) The exposure determination required by paragraph(c)(2),

(B) The schedule and method of implementation for paragraphs (d) Methods of Compliance, (e) HIV and HBV Research Laboratories and Production Facilities, (f) Hepatitis B Vaccination and Post-Exposure Evaluation and Follow-up, (g) Communication of Hazards to Employees, and (h) Recordkeeping, of this standard, and

(C) The procedure for the evaluation of circumstances surrounding exposure incidents as required by paragraph (f)(3)(i) of this standard.

(iii) Each employer shall ensure that a copy of the Exposure Control Plan is accessible to employees in accordance with 29 CFR 1910.20(e).

(iv) The Exposure Control Plan shall be reviewed and updated at least annually and whenever necessary to reflect new or modified tasks and procedures which affect occupational exposure and to reflect new or revised employee positions with occupational exposure.

(v) The Exposure Control Plan shall be made available to the Assistant Secretary and the Director upon request for examination and copying.

(2) *Exposure determination.* (i) Each employer who has an employee(s) with occupational exposure as defined by paragraph (b) of this section shall prepare an exposure determination. This exposure determination shall contain the following:

(A) A list of all job classifications in which all employees in those job classifications have occupational exposure;

(B) A list of job classifications in which some employees have occupational exposure, and

(C) A list of all tasks and procedures or groups of closely related task and procedures in which occupational exposure occurs and that are performed by employees in job classifications listed in accordance with the provisions of paragraph (c)(2)(i)(B) of this standard.

(ii) This exposure determination shall be made without regard to the use of personal protective equipment.

(d) *Methods of compliance*—(1) *General*—Universal precautions shall be observed to prevent contact with blood or other potentially infectious materials. Under circumstances in which differentiation between body fluid types is difficult or impossible, all body fluids shall be considered potentially infectious materials.

(2) *Engineering and work practice controls.* (i) Engineering and work practice controls shall be used to eliminate or minimize employee exposure. Where occupational exposure remains after institution of these controls, personal protective equipment shall also be used.

(ii) Engineering controls shall be examined and maintained or replaced on a regular schedule to ensure their effectiveness.

(iii) Employers shall provide handwashing facilities which are readily accessible to employees.

(iv) When provision of handwashing facilities is not feasible, the employer shall provide either an appropriate antiseptic hand cleanser in conjunction with clean cloth/paper towels or antiseptic towelettes. When antiseptic hand cleansers or towelettes are used, hands shall be washed with soap and running water as soon as feasible.

(v) Employers shall ensure that employees wash their hands immediately or as soon as feasible after removal of gloves or other personal protective equipment.

(vi) Employers shall ensure that employees wash hands and any other skin with soap and water, or flush mucous membranes with water immediately or as soon as feasible following contact of such body areas with blood or other potentially infectious materials.

(vii) Contaminated needles and other contaminated sharps shall not be bent, recapped, or removed except as noted in paragraphs (d)(2)(vii)(A) and (d)(2)(vii)(B) below. Shearing or breaking of contaminated needles is prohibited.

(A) Contaminated needles and other contaminated sharps shall not be recapped or removed unless the employer can demonstrate that no alternative is feasible or that such action is required by a specific medical procedure.

(B) Such recapping or needle removal must be accomplished through the use of a mechanical device or a one-handed technique.

(viii) Immediately or as soon as possible after use, contaminated reusable sharps shall be placed in appropriate containers until properly reprocessed. These containers shall be:

(A) Puncture resistant;

(B) Labeled or color-coded in accordance with this standard;

(C) Leakproof on the sides and bottom; and

(D) In accordance with the requirements set forth in paragraph (d)(4)(ii)(E) for reusable sharps.

(ix) Eating, drinking, smoking, applying cosmetics or lip balm, and handling contact lenses are prohibited in work areas where there is a reasonable likelihood of occupational exposure.

(x) Food and drink shall not be kept in refrigerators, freezers, shelves, cabinets or on countertops or benchtops where blood or other potentially infectious materials are present.

(xi) All procedures involving blood or other potentially infectious materials shall be performed in such a manner as to minimize splashing, spraying, spattering, and generation of droplets of these substances.

(xii) Mouth pipetting/suctioning of blood or other potentially infectious materials is prohibited.

(xiii) Specimens of blood or other potentially infectious materials shall be placed in a container which prevents leakage during collection, handling, processing, storage, transport, or shipping.

(A) The container for storage, transport, or shipping shall be labeled or color-coded according to paragraph (g)(1)(i) and closed prior to being stored, transported, or shipped. When a facility utilizes Universal Precautions in the handling of all specimens, the labeling/color-coding of specimens is not necessary provided containers are recognizable as containing specimens. This exemption only applies while such specimens/containers remain within the facility. Labeling or color-coding in accordance with paragraph (g)(1)(i) is required when such specimens/containers leave the facility.

(B) If outside contamination of the primary container occurs, the primary container shall be placed within a second container which prevents leakage during handling, processing, storage, transport, or shipping and is labeled or color-coded according to the requirements of this standard.

(C) If the specimen could puncture the primary container, the primary container shall be placed within a secondary container which is puncture-resistant in addition to the above characteristics.

(xiv) Equipment which may become contaminated with blood or other potentially infectious materials shall be examined prior to servicing or shipping and shall be decontaminated as necessary, unless the employer can demonstrate that decontamination of such equipment or portions of such equipment is not feasible.

(A) A readily observable label in accordance with paragraph (g)(1)(i)(H) shall be attached to the equipment stating which portions remain contaminated.

(B) The employer shall ensure that this information is conveyed to all affected employees, the servicing representative, and/or the manufacturer, as appropriate, prior to handling, servicing, or shipping so that appropriate precautions will be taken.

(3) Personal protective equipment—(i) Provision. When there is occupational exposure, the employer shall provide, at no cost to the employee, appropriate personal protective equipment such as, but not limited to, gloves, gowns, laboratory coats, face shields or masks and eye protection, and mouthpieces, resuscitation bags, pocket masks, or other ventilation devices. Personal protective equipment will be considered "appropriate" only if it does not permit blood or other potentially infectious materials to pass through to or reach the employee's work clothes, street clothes, undergarments, skin, eyes, mouth, or other mucous membranes under normal conditions of use and for the duration of time which the protective equipment will be used.

(ii) Use. The employer shall ensure that the employee uses appropriate personal protective equipment unless the employer shows that the employee temporarily and briefly declined to use personal protective equipment when, under rare and extraordinary circumstances, it was the employee's professional judgment that in the specific instance its use would have prevented the delivery of health care or public safety services or would have posed an increased hazard to the safety of the worker or co-worker. When the employee makes this judgement, the circumstances shall be investigated and documented in order to determine whether changes can be instituted to prevent such occurences in the future.

(iii) Accessibility. The employer shall ensure that appropriate personal protective equipment in the appropriate sizes is readily accessible at the worksite or is issued to employees. Hypoallergenic gloves, glove liners, powderless gloves, or other similar alternatives shall be readily accessible to those employees who are allergic to the gloves normally provided.

(iv) Cleaning, Laundering, and Disposal. The employer shall clean, launder, and dispose of personal protective equipment required by paragraphs (d) and (e) of this standard, at no cost to the employee.

(v) Repair and Replacement. The employer shall repair or replace personal protective equipment as needed to maintain its effectiveness, at no cost to the employee.

(vi) If a garment(s) is penetrated by blood or other potentially infectious materials, the garment(s) shall be removed immediately or as soon as feasible.

(vii) All personal protective equipment shall be removed prior to leaving the work area.

(viii) When personal protective equipment is removed it shall be placed in an appropriately designated area or container for storage, washing, decontamination or disposal.

(ix) Gloves. Gloves shall be worn when it can be reasonably anticipated that the employee may have hand contact with blood, other potentially infectious materials, mucous membranes, and non-intact skin; when performing vascular access procedures except as specified in paragraph (d)(3)(ix)(D); and when handling or touching contaminated items or surfaces.

(A) Disposable (single use) gloves such as surgical or examination gloves, shall be replaced as soon as practical when contaminated or as soon as feasible if they are torn, punctured, or when their ability to function as a barrier is compromised.

(B) Disposable (single use) gloves shall not be washed or decontaminated for re-use.

(C) Utility gloves may be decontaminated for re-use if the integrity of the glove is not compromised. However, they must be discarded if they are cracked, peeling, torn, punctured, or exhibit other signs of deterioration or when their ability to function as a barrier is compromised.

(D) If an employer in a volunteer blood donation center judges that routine gloving for all phlebotomies is not necessary then the employer shall:

(*1*) Periodically reevaluate this policy;

(*2*) Make gloves available to all employees who wish to use them for phlebotomy;

(*3*) Not discourage the use of gloves for phlebotomy; and

(*4*) Require that gloves be used for phlebotomy in the following circumstances:

(*i*) When the employee has cuts, scratches, or other breaks in his or her skin;

(*ii*) When the employee judges that hand contamination with blood may occur, for example, when performing phlebotomy on an uncooperative source individual; and

(*iii*) When the employee is receiving training in phlebotomy.

(x) Masks, Eye Protection, and Face Shields. Masks in combination with eye protection devices, such as goggles or glasses with solid side shields, or chin-length face shields, shall be worn whenever splashes, spray, spatter, or droplets of blood or other potentially infectious materials may be generated and eye, nose, or mouth contamination can be reasonably anticipated.

(xi) Gowns, Aprons, and Other Protective Body Clothing. Appropriate protective clothing such as, but not limited to, gowns, aprons, lab coats, clinic jackets, or similar outer garments shall be worn in occupational exposure situations. The type and characteristics will depend upon the task and degree of exposure anticipated.

(xii) Surgical caps or hoods and/or shoe covers or boots shall be worn in instances when gross contamination can reasonably be anticipated (e.g., autopsies, orthopaedic surgery).

(4) *Housekeeping*. (i) General. Employers shall ensure that the worksite is maintained in a clean and sanitary condition. The employer shall determine and implement an appropriate written schedule for cleaning and method of decontamination based upon the location within the facility, type of surface to be cleaned, type of soil present, and tasks or procedures being performed in the area.

(ii) All equipment and environmental and working surfaces shall be cleaned and decontaminated after contact with blood or other potentially infectious materials.

(A) Contaminated work surfaces shall be decontaminated with an appropriate disinfectant after completion of procedures; immediately or as soon as feasible when surfaces are overtly contaminated or after any spill of blood or other potentially infectious materials; and at the end of the work shift if the surface may have become contaminated since the last cleaning.

(B) Protective coverings, such as plastic wrap, aluminum foil, or imperviously-backed absorbent paper used to cover equipment and environmental surfaces, shall be removed and replaced as soon as feasible when they become overtly contaminated or at the end of the workshift if they may have become contaminated during the shift.

(C) All bins, pails, cans, and similar receptacles intended for reuse which have a reasonable likelihood for becoming contaminated with blood or other potentially infectious materials shall be inspected and decontaminated on a regularly scheduled basis and cleaned and decontaminated immediately or as soon as feasible upon visible contamination.

(D) Broken glassware which may be contaminated shall not be picked up directly with the hands. It shall be cleaned up using mechanical means,

such as a brush and dust pan, tongs, or forceps.

(E) Reusable sharps that are contaminated with blood or other potentially infectious materials shall not be stored or processed in a manner that requires employees to reach by hand into the containers where these sharps have been placed.

(iii) Regulated Waste.

(A) Contaminated Sharps Discarding and Containment. (*1*) Contaminated sharps shall be discarded immediately or as soon as feasible in containers that are:

(*i*) Closable;

(*ii*) Puncture resistant;

(*iii*) Leakproof on sides and bottom; and

(*iv*) Labeled or color-coded in accordance with paragraph (g)(1)(i) of this standard.

(*2*) During use, containers for contaminated sharps shall be:

(*i*) Easily accessible to personnel and located as close as is feasible to the immediate area where sharps are used or can be reasonably anticipated to be found (e.g., laundries);

(*ii*) Maintained upright throughout use; and

(*iii*) Replaced routinely and not be allowed to overfill.

(*3*) When moving containers of contaminated sharps from the area of use, the containers shall be:

(*i*) Closed immediately prior to removal or replacement to prevent spillage or protrusion of contents during handling, storage, transport, or shipping;

(*ii*) Placed in a secondary container if leakage is possible. The second container shall be:

(*A*) Closable;

(*B*) Constructed to contain all contents and prevent leakage during handling, storage, transport, or shipping; and

(*C*) Labeled or color-coded according to paragraph (g)(1)(i) of this standard.

(*4*) Reusable containers shall not be opened, emptied, or cleaned manually or in any other manner which would expose employees to the risk of percutaneous injury.

(B) Other Regulated Waste Containment.(*1*) Regulated waste shall be placed in containers which are:

(*i*) Closable;

(*ii*) Constructed to contain all contents and prevent leakage of fluids during handling, storage, transport or shipping;

(*iii*) Labeled or color-coded in accordance with paragraph (g)(1)(i) this standard; and

(*iv*) Closed prior to removal to prevent spillage or protrusion of contents during handling, storage, transport, or shipping.

(*2*) If outside contamination of the regulated waste container occurs, it shall be placed in a second container. The second container shall be:

(*i*) Closable;

(*ii*) Constructed to contain all contents and prevent leakage of fluids during handling, storage, transport or shipping;

(*iii*) Labeled or color-coded in accordance with paragraph (g)(1)(i) of this standard; and

(*iv*) Closed prior to removal to prevent spillage or protrusion of contents during handling, storage, transport, or shipping.

(C) Disposal of all regulated waste shall be in accordance with applicable regulations of the United States, States and Territories, and political subdivisions of States and Territories.

(iv) Laundry.

(A) Contaminated laundry shall be handled as little as possible with a minimum of agitation. (1) Contaminated laundry shall be bagged or containerized at the location where it was used and shall not be sorted or rinsed in the location of use.

(2) Contaminated laundry shall be placed and transported in bags or containers labeled or color-coded in accordance with paragraph (g)(1)(i) of this standard. When a facility utilizes Universal Precautions in the handling of all soiled laundry, alternative labeling or color-coding is sufficient if it permits all employees to recognize the containers as requiring compliance with Universal Precautions.

(3) Whenever contaminated laundry is wet and presents a reasonable likelihood of soak-through of or leakage from the bag or container, the laundry shall be placed and transported in bags or containers which prevent soak-through and/or leakage of fluids to the exterior.

(B) The employer shall ensure that employees who have contact with contaminated laundry wear protective gloves and other appropriate personal protective equipment.

(C) When a facility ships contaminated laundry off-site to a second facility which does not utilize Universal Precautions in the handling of all laundry, the facility generating the contaminated laundry must place such laundry in bags or containers which are labeled or color-coded in accordance with paragraph (g)(1)(i).

(e) *HIV and HBV Research Laboratories and Production Facilities.* (1) This paragraph applies to research laboratories and production facilities engaged in the culture, production, concentration, experimentation, and manipulation of HIV and HBV. It does not apply to clinical or diagnostic laboratories engaged solely in the analysis of blood, tissues, or organs. These requirements apply in addition to the other requirements of the standard.

(2) Research laboratories and production facilities shall meet the following criteria:

(i) Standard microbiological practices. All regulated waste shall either be incinerated or decontaminated by a method such as autoclaving known to effectively destroy bloodborne pathogens.

(ii) Special practices.

(A) Laboratory doors shall be kept closed when work involving HIV or HBV is in progress.

(B) Contaminated materials that are to be decontaminated at a site away from the work area shall be placed in a durable, leakproof, labeled or color-coded container that is closed before being removed from the work area.

(C) Access to the work area shall be limited to authorized persons. Written policies and procedures shall be established whereby only persons who have been advised of the potential biohazard, who meet any specific entry requirements, and who comply with all entry and exit procedures shall be allowed to enter the work areas and animal rooms.

(D) When other potentially infectious materials or infected animals are present in the work area or containment module, a hazard warning sign incorporating the universal biohazard symbol shall be posted on all access doors. The hazard warning sign shall comply with paragraph (g)(1)(ii) of this standard.

(E) All activities involving other potentially infectious materials shall be conducted in biological safety cabinets or other physical-containment devices within the containment module. No work with these other potentially infectious materials shall be conducted on the open bench.

(F) Laboratory coats, gowns, smocks, uniforms, or other appropriate protective clothing shall be used in the work area and animal rooms. Protective clothing shall not be worn outside of the work area and shall be decontaminated before being laundered.

(G) Special care shall be taken to avoid skin contact with other potentially infectious materials. Gloves shall be worn when handling infected animals and when making hand contact with other potentially infectious materials is unavoidable.

(H) Before disposal all waste from work areas and from animal rooms shall either be incinerated or decontaminated by a method such as autoclaving known to effectively destroy bloodborne pathogens.

(I) Vacuum lines shall be protected with liquid disinfectant traps and high-efficiency particulate air (HEPA) filters or filters of equivalent or superior efficiency and which are checked routinely and maintained or replaced as necessary.

(J) Hypodermic needles and syringes shall be used only for parenteral injection and aspiration of fluids from laboratory animals and diaphragm bottles. Only needle-locking syringes or disposable syringe-needle units (i.e., the needle is integral to the syringe) shall be used for the injection or aspiration of other potentially infectious materials. Extreme caution shall be used when handling needles and syringes. A needle shall not be bent, sheared, replaced in the sheath or guard, or removed from the syringe following use. The needle and syringe shall be promptly placed in a puncture-resistant container and autoclaved or decontaminated before reuse or disposal.

(K) All spills shall be immediately contained and cleaned up by appropriate professional staff or others properly trained and equipped to work with potentially concentrated infectious materials.

(L) A spill or accident that results in an exposure incident shall be immediately reported to the laboratory director or other responsible person.

(M) A biosafety manual shall be prepared or adopted and periodically reviewed and updated at least annually or more often if necessary. Personnel shall be advised of potential hazards, shall be required to read instructions on practices and procedures, and shall be required to follow them.

(iii) Containment equipment. (A) Certified biological safety cabinets (Class I, II, or III) or other appropriate combinations of personal protection or physical containment devices, such as special protective clothing, respirators, centrifuge safety cups, sealed centrifuge rotors, and containment caging for animals, shall be used for all activities with other potentially infectious materials that pose a threat of exposure to droplets, splashes, spills, or aerosols.

(B) Biological safety cabinets shall be certified when installed, whenever they are moved and at least annually.

(3) HIV and HBV research laboratories shall meet the following criteria:

(i) Each laboratory shall contain a facility for hand washing and an eye wash facility which is readily available within the work area.

(ii) An autoclave for decontamination of regulated waste shall be available.

(4) HIV and HBV production facilities shall meet the following criteria:

(i) The work areas shall be separated from areas that are open to unrestricted traffic flow within the building. Passage through two sets of doors shall be the basic requirement for entry into the work area from access corridors or other contiguous areas. Physical separation of the high-containment work area from access corridors or other areas or activities may also be provided by a double-doored clothes-change room (showers may be included), airlock, or other access facility that requires passing through two sets of doors before entering the work area.

(ii) The surfaces of doors, walls, floors and ceilings in the work area shall be water resistant so that they can be easily cleaned. Penetrations in these surfaces shall be sealed or capable of being sealed to facilitate decontamination.

(iii) Each work area shall contain a sink for washing hands and a readily available eye wash facility. The sink shall be foot, elbow, or automatically operated and shall be located near the exit door of the work area.

(iv) Access doors to the work area or containment module shall be self-closing.

(v) An autoclave for decontamination of regulated waste shall be available within or as near as possible to the work area.

(vi) A ducted exhaust-air ventilation system shall be provided. This system shall create directional airflow that draws air into the work area through the entry area. The exhaust air shall not be recirculated to any other area of the building, shall be discharged to the outside, and shall be dispersed away from occupied areas and air intakes. The proper direction of the airflow shall be verified (i.e., into the work area).

(5) *Training Requirements.* Additional training requirements for employees in HIV and HBV research laboratories and HIV and HBV production facilities are specified in paragraph (g)(2)(ix).

(f) *Hepatitis B vaccination and post-exposure evaluation and follow-up—(1) General.* (i) The employer shall make available the hepatitis B vaccine and vaccination series to all employees who have occupational exposure, and post-exposure evaluation and follow-up to all employees who have had an exposure incident.

(ii) The employer shall ensure that all medical evaluations and procedures including the hepatitis B vaccine and vaccination series and post-exposure evaluation and follow-up, including prophylaxis, are:

(A) Made available at no cost to the employee;

(B) Made available to the employee at a reasonable time and place;

(C) Performed by or under the supervision of a licensed physician or by or under the supervision of another licensed healthcare professional; and

(D) Provided according to recommendations of the U.S. Public Health Service current at the time these evaluations and procedures take place, except as specified by this paragraph (f).

(iii) The employer shall ensure that all laboratory tests are conducted by an accredited laboratory at no cost to the employee.

(2) *Hepatitis B Vaccination.* (i) Hepatitis B vaccination shall be made available after the employee has received the training required in paragraph (g)(2)(vii)(I) and within 10 working days of initial assignment to all employees who have occupational exposure unless the employee has previously received the complete hepatitis B vaccination series, antibody testing has revealed that the employee is immune, or the vaccine is contraindicated for medical reasons.

(ii) The employer shall not make participation in a prescreening program a prerequisite for receiving hepatitis B vaccination.

(iii) If the employee initially declines hepatitis B vaccination but at a later date while still covered under the standard decides to accept the vaccination, the employer shall make available hepatitis B vaccination at that time

(iv) The employer shall assure that employees who decline to accept hepatitis B vaccination offered by the employer sign the statement in appendix A.

(v) If a routine booster dose(s) of hepatitis B vaccine is recommended by the U.S. Public Health Service at a future date, such booster dose(s) shall be made available in accordance with section (f)(1)(ii).

(3) *Post-exposure Evaluation and Follow-up.* Following a report of an exposure incident, the employer shall make immediately available to the exposed employee a confidential medical evaluation and follow-up, including at least the following elements:

(i) Documentation of the route(s) of exposure, and the circumstances under which the exposure incident occurred;

(ii) Identification and documentation of the source individual, unless the employer can establish that identification is infeasible or prohibited by state or local law;

(A) The source individual's blood shall be tested as soon as feasible and

after consent is obtained in order to determine HBV and HIV infectivity. If consent is not obtained, the employer shall establish that legally required consent cannot be obtained. When the source individual's consent is not required by law, the source individual's blood, if available, shall be tested and the results documented.

(B) When the source individual is already known to be infected with HBV or HIV, testing for the source individual's known HBV or HIV status need not be repeated.

(C) Results of the source individual's testing shall be made available to the exposed employee, and the employee shall be informed of applicable laws and regulations concerning disclosure of the identity and infectious status of the source individual.

(iii) Collection and testing of blood for HBV and HIV serological status:

(A) The exposed employee's blood shall be collected as soon as feasible and tested after consent is obtained.

(B) If the employee consents to baseline blood collection, but does not give consent at that time for HIV serologic testing, the sample shall be preserved for at least 90 days. If, within 90 days of the exposure incident, the employee elects to have the baseline sample tested, such testing shall be done as soon as feasible.

(iv) Post-exposure prophylaxis, when medically indicated, as recommended by the U.S. Public Health Service;

(v) Counseling; and

(vi) Evaluation of reported illnesses.

(4) *Information Provided to the Healthcare Professional.* (i) The employer shall ensure that the healthcare professional responsible for the employee's Hepatitis B vaccination is provided a copy of this regulation.

(ii) The employer shall ensure that the healthcare professional evaluating an employee after an exposure incident is provided the following information:

(A) A copy of this regulation;

(B) A description of the exposed employee's duties as they relate to the exposure incident;

(C) Documentation of the route(s) of exposure and circumstances under which exposure occurred;

(D) Results of the source individual's blood testing, if available; and

(E) All medical records relevant to the appropriate treatment of the employee including vaccination status which are the employer's responsibility to maintain.

(5) *Healthcare Professional's Written Opinion.* The employer shall obtain and provide the employee with a copy of the evaluating healthcare professional's written opinion within 15 days of the completion of the evaluation.

(i) The healthcare professional's written opinion for Hepatitis B vaccination shall be limited to whether Hepatitis B vaccination is indicated for an employee, and if the employee has received such vaccination.

(ii) The healthcare professional's written opinion for post-exposure evaluation and follow-up shall be limited to the following information:

(A) That the employee has been informed of the results of the evaluation; and

(B) That the employee has been told about any medical conditions resulting from exposure to blood or other potentially infectious materials which require further evaluation or treatment.

(iii) All other findings or diagnoses shall remain confidential and shall not be included in the written report.

(6) *Medical recordkeeping.* Medical records required by this standard shall be maintained in accordance with paragraph (h)(1) of this section.

(g) *Communication of hazards to employees*— (1) *Labels and signs.* (i) Labels. (A) Warning labels shall be affixed to containers of regulated waste, refrigerators and freezers containing blood or other potentially infectious material; and other containers used to store, transport or ship blood or other potentially infectious materials, except as provided in paragraph (g)(1)(i)(E), (F) and (G).

(B) Labels required by this section shall include the following legend:

BIOHAZARD

BIOHAZARD

(C) These labels shall be fluorescent orange or orange-red or predominantly so, with lettering or symbols in a contrasting color.

(D) Labels required by affixed as close as feasible to the container by string, wire, adhesive, or other method that prevents their loss or unintentional removal.

(E) Red bags or red containers may be substituted for labels.

(F) Containers of blood, blood components, or blood products that are labeled as to their contents and have been released for transfusion or other clinical use are exempted from the labeling requirements of paragraph (g).

(G) Individual containers of blood or other potentially infectious materials that are placed in a labeled container during storage, transport, shipment or disposal are exempted from the labeling requirement.

(H) Labels required for contaminated equipment shall be in accordance with this paragraph and shall also state which portions of the equipment remain contaminated.

(I) Regulated waste that has been decontaminated need not be labeled or color-coded.

(ii) Signs. (A) The employer shall post signs at the entrance to work areas specified in paragraph (e), HIV and HBV Research Laboratory and Production Facilities, which shall bear the following legend:

BIOHAZARD

BIOHAZARD

(Name of the Infectious Agent)
(Special requirements for entering the area)
(Name, telephone number of the laboratory director or other responsible person.)

(B) These signs shall be fluorescent orange-red or predominantly so, with lettering or symbols in a contrasting color.

(2) *Information and Training.* (i) Employers shall ensure that all employees with occupational exposure participate in a training program which must be provided at no cost to the employee and during working hours.

(ii) Training shall be provided as follows:

(A) At the time of initial assignment to tasks where occupational exposure may take place;

(B) Within 90 days after the effective date of the standard; and

(C) At least annually thereafter.

(iii) For employees who have received training on bloodborne pathogens in the year preceding the effective date of the standard, only training with respect to the provisions of the standard which were not included need be provided.

(iv) Annual training for all employees shall be provided within one year of their previous training.

(v) Employers shall provide additional training when changes such as modification of tasks or procedures or institution of new tasks or procedures affect the employee's occupational exposure. The additional training may be limited to addressing the new exposures created.

(vi) Material appropriate in content and vocabulary to educational level, literacy, and language of employees shall be used.

(vii) The training program shall contain at a minimum the following elements:

(A) Anaccessible copy of the regulatory text of this standard and an explanation of its contents;

(B) A general explanation of the epidemiology and symptoms of bloodborne diseases;

(C) An explanation of the modes of transmission of bloodborne pathogens;

(D) An explanation of the employer's exposure control plan and the means by which the employee can obtain a copy of the written plan;

(E) An explanation of the appropriate methods for recognizing tasks and other activities that may involve exposure to blood and other potentially infectious materials;

(F) An explanation of the use and limitations of methods that will prevent or reduce exposure including appropriate engineering controls, work practices, and personal protective equipment;

(G) Information on the types, proper use, location, removal, handling, decontamination and disposal of personal protective equipment;

(H) An explanation of the basis for selection of personal protective equipment;

(I) Information on the hepatitis B vaccine, including information on its efficacy, safety, method of administration, the benefits of being vaccinated, and that the vaccine and vaccination will be offered free of charge;

(J) Information on the appropriate actions to take and persons to contact in an emergency involving blood or other potentially infectious materials;

(K) An explanation of the procedure to follow if an exposure incident occurs, including the method of reporting the incident and the medical follow-up that will be made available;

(L) Information on the post-exposure evaluation and follow-up that the employer is required to provide for the employee following an exposure incident;

(M) An explanation of the signs and labels and/or color coding required by paragraph (g)(1); and

(N) An opportunity for interactive questions and answers with the person conducting the training session.

(viii) The person conducting the training shall be knowledgeable in the subject matter covered by the elements contained in the training program as it relates to the workplace that the training will address.

(ix) Additional Initial Training for Employees in HIV and HBV Laboratories and Production Facilities. Employees in HIV or HBV research laboratories and HIV or HBV production facilities shall receive the following initial training in addition to the above training requirements.

(A) The employer shall assure that employees demonstrate proficiency in standard microbiological practices and techniques and in the practices and operations specific to the facility before being allowed to work with HIV or HBV.

(B) The employer shall assure that employees have prior experience in the handling of human pathogens or tissue cultures before working with HIV or HBV.

(C) The employer shall provide a training program to employees who have no prior experience in handling human pathogens. Initial work activities shall not include the handling of infectious agents. A progression of work activities shall be assigned as techniques are learned and proficiency is developed. The employer shall assure that employees participate in work activities involving infectious agents only after proficiency has been demonstrated.

(h) *Recordkeeping—(1) Medical Records.* (i) The employer shall establish and maintain an accurate record for each employee with occupational exposure, in accordance with 29 CFR 1910.20.

(ii) This record shall include:

(A) The name and social security number of the employee;

(B) A copy of the employee's hepatitis B vaccination status including the dates of all the hepatitis B vaccinations and any medical records relative to the employee's ability to receive vaccination as required by paragraph (f)(2);

(C) A copy of all results of examinations, medical testing, and follow-up procedures as required by paragraph (f)(3);

(D) The employer's copy of the healthcare professional's written opinion as required by paragraph (f)(5); and

(E) A copy of the information provided to the healthcare professional as required by paragraphs (f)(4)(ii)(B)(C) and (D).

(iii) Confidentiality. The employer shall ensure that employee medical records required by paragraph (h)(1) are:

(A) Kept confidential; and

(B) Are not disclosed or reported without the employee's express written consent to any person within or outside the workplace except as required by this section or as may be required by law.

(iv) The employer shall maintain the records required by paragraph (h) for at least the duration of employment plus 30 years in accordance with 29 CFR 1910.20.

(2) *Training Records. (i) Training records shall include the following information:*

(A) The dates of the training sessions;

(B) The contents or a summary of the training sessions;

(C) The names and qualifications of persons conducting the training; and

(D) The names and job titles of all persons attending the training sessions.

(ii) Training records shall be maintained for 3 years from the date on which the training occurred.

(3) *Availability.* (i) The employer shall ensure that all records required to be maintained by this section shall be made available upon request to the Assistant Secretary and the Director for examination and copying.

(ii) Employee training records required by this paragraph shall be provided upon request for examination and copying to employees, to employee representatives, to the Director, and to the Assistant Secretary in accordance with 29 CFR 1910.20.

(iii) Employee medical records required by this paragraph shall be provided upon request for examination and copying to the subject employee, to anyone having written consent of the subject employee, to the Director, and to the Assistant Secretary in accordance with 29 CFR 1910.20.

(4) *Transfer of Records.* (i) The employer shall comply with the requirements involving transfer of records set forth in 29 CFR 1910.20(h).

(ii) If the employer ceases to do business and there is no successor employer to receive and retain the records for the prescribed period, the employer shall notify the Director, at least three months prior to their disposal and transmit them to the Director, if required by the Director to do so, within that three month period.

(i) *Dates—(1) Effective Date.* The standard shall become effective on March 6, 1992.

(2) The Exposure Control Plan required by paragraph (c)(2) of this section shall be completed on or before May 5, 1992.

(3) Paragraph (g)(2) Information and Training and (h) Recordkeeping shall take effect on or before June 4, 1992.

(4) Paragraphs (d)(2) Engineering and Work Practice Controls, (d)(3) Personal Protective Equipment, (d)(4) Housekeeping, (e) HIV and HBV Research Laboratories and Production Facilities, (f) Hepatitis B Vaccination and Post-Exposure Evaluation and Follow-up, and (g) (1) Labels and Signs, shall take effect July 6, 1992.

Appendix A to Section 1910.1030—Hepatitis B Vaccine Declination (Mandatory)

I understand that due to my occupational exposure to blood or other potentially infectious materials I may be at risk of acquiring hepatitis B virus (HBV) infection. I have been given the opportunity to be vaccinated with hepatitis B vaccine, at no charge to myself. However, I decline hepatitis B vaccination at this time. I understand that by declining this vaccine, I continue to be at risk of acquiring hepatitis B, a serious disease. If in the future I continue to have occupational exposure to blood or other potentially infectious materials and I want to be vaccinated with hepatitis B vaccine, I can receive the vaccination series at no charge to me.

[FR Doc. 91-28886 Filed 12-2-91; 8:45 am]

BILLING CODE 4510-26-M

MODULE 3:

VIEWGRAPHS

VIEWGRAPHS/SLIDES

TRAINING

OVERHEADS

AFFECTED WORKERS

- Healthcare
- Morticians
- Launderers
- Emergency Responders
- Correctional
- Law Enforcement
- Firefighters

Viewgraph 1

STANDARD REQUIREMENTS

- Exposure Control
- Methods of Compliance
- HIV/HBV Laboratories and Production Facilities

Viewgraph 2

STANDARD REQUIREMENTS

- HBV Vaccination, Post-Exposure Evaluation, and Follow-Up
- Communication of Hazards
- Recordkeeping

Viewgraph 3

STANDARD REQUIREMENTS

- Exposure Control

Viewgraph 4

EXPOSURE CONTROL

- Exposure Control Plan
- Exposure Determination

EXPOSURE CONTROL PLAN

- Written
- Accessible
- Reviewed and updated
- Implementation Plan

Viewgraph 6

EXPOSURE DETERMINATION

- Included in ECP
- Without regard to PPE
- Job classifications - all employees
- Job tasks - some employees

STANDARD REQUIREMENTS

- Exposure Control
- Methods of Compliance

Viewgraph 8

METHODS OF COMPLIANCE

- Universal Precautions
- Engineering Controls
- Work Practices
- Personal Protective Equipment
- Housekeeping

Viewgraph 9

UNIVERSAL PRECAUTIONS

- All Blood

Treat as if Infected with HIV, HBV, or Other BBP

- Other Potentially Infectious Materials

Viewgraph 10

ENGINEERING CONTROLS

- Sharps Disposal Containers
- Needle Resheathing Devices
- Specimen Containment
- BSCs

Viewgraph 11

WORK PRACTICES

- Handwashing
- Employee Rotation
- Process Change
- Proper Sharps Disposal

PERSONAL PROTECTIVE EQUIPMENT

- Gloves
- Mouthpieces
- Masks
- Resuscitation Bags
- Face Shields
- Gowns
- Shoe Covers

Viewgraph 13

HOUSEKEEPING

- Decontamination
- Waste Disposal
  - Sharps
  - Other Regulated Waste
- Laundry

STANDARD REQUIREMENTS

- Exposure Control
- Methods of Compliance
- HIV and HBV Research Laboratories and Production Facilities

Viewgraph 15

HIV AND HBV RESEARCH LABORATORIES AND PRODUCTION FACILITIES

- Standard Microbiological Practices
- Special Practices
- Containment Equipment

Viewgraph 16

STANDARD MICROBIOLOGICAL PRACTICES

- Awareness
- Proficiency
- Training

Viewgraph 17

SPECIAL PRACTICES

- Access Limitation
- Containment
- PPE
- Decontamination
- Ventilation

CONTAINMENT EQUIPMENT

- Certified BSCs
- Respirators
- Sealed centrifuge rotors
- Animal caging

STANDARD REQUIREMENTS

- Exposure Control
- Methods of Compliance
- HIV and HBV Research Laboratories and Production Facilities
- Hepatitis B Vaccination, Post-Exposure Evaluation and Follow-Up

Viewgraph 20

HEPATITIS B VACCINATION

- All Occupationally Exposed Employees
  - At No Cost
  - At a Reasonable Time and Place
  - Licensed Healthcare Professional

HEPATITIS B VACCINATION

- 10 days post-training
- Declinable
- Mandatory declination statement
- USPHS guidelines

POST-EXPOSURE EVALUATION AND FOLLOW-UP

- No cost laboratory tests
- CONFIDENTIAL
  - Medical Evaluation
  - Test Results
  - Diagnoses
  - Counseling

STANDARD REQUIREMENTS

- Exposure Control
- Methods of Compliance
- HIV and HBV Research Laboratories and Production Facilities
- Hepatitis B Vaccination, Post-Exposure Evaluation and Follow-Up
- Communication of Hazards to Employees

COMMUNICATION OF HAZARDS TO EMPLOYEES

- Labels
- Signs
- Information and Training

LABELS

- Regulated Waste Containers
- Refrigerators/Freezers
- Laundry
- Specimens
- Equipment

SIGNS

Entrances To:

- HIV/HBV Labs and Facilities
- Animal Rooms
- Other HIV/HBV Work Areas

Viewgraph 27

INFORMATION AND TRAINING

- Initially upon assignment
- Annually
- Interactive Q&A
- Knowledgeable trainer
- OSHA Standard .1030 contents

Viewgraph 28

STANDARD REQUIREMENTS

- Exposure Control
- Methods of Compliance
- HIV and HBV Research Laboratories and Production Facilities
- Hepatitis B Vaccination, Post-Exposure Evaluation and Follow-Up
- Communication of Hazards to Employees
- Recordkeeping

RECORDKEEPING

- Medical Records
- Training Records

Viewgraph 30

MEDICAL RECORDS

- CONFIDENTIAL
  - Hepatitis B Vaccination Status
  - All Results
  - LHCP's Written Opinion
  - Information Provided to LHCP
- Duration of Employment Plus 30 Years

TRAINING RECORDS

- Program Summary and Dates
- Trainer Name and Qualifications
- Trainee Names and Job Titles
- Maintained for 3 Years

RECAP
STANDARD REQUIREMENTS

- Exposure Control
- Methods of Compliance
- HIV and HBV Research Laboratories and Production Facilities
- Hepatitis B Vaccination, Post-Exposure Evaluation and Follow-Up
- Communication of Hazards to Employees
- Recordkeeping

MODULE 4:

SOURCES OF ASSISTANCE

The following is a list of sources from which you can obtain technical consultative services and other assistance.

1. USAEHA
   Healthcare Hazards Program
   ATTN: HSHB-MI-HS
   APG, MD 21010-5422
   (410) 671-3040
   DSN 584-3040

2. USAEHA
   Waste Disposal Engineering Division
   ATTN: HSHB-ME-S
   APG, MD 21010-5422
   (410) 671-3651/3652
   DSN 584-3651/3652

3. USAEHA
   Occupational and Environmental Medicine Division
   ATTN: HSHB-MO-O
   APG, MD 21010-5422
   (410) 671-2714/3534
   DSN 584-2714/3534

4. U.S. Dept of Labor
   OSHA
   200 Constitution Avenue, NW
   Washington, DC 20210
   (202) 523-6091

   OSHA Information
   (202) 219-8148

   Office of Public Information and Consumer Affairs
   (202) 219-8148

   Office of Health Compliance Assistance
   (202) 219-8036

   OSHA Emergency Hotline
   (800) 321-OSHA (6742)

5. OSHA Publications Office
   200 Constitution Avenue, NW
   Room N-3101
   Washington, DC 20210
   (202) 219-4667

See appendix A for OSHA consultation services, regional offices, and available services.

6. Infection Control Service
   WRAMC
   Washington, DC 20307-5001
   (202) 576-4350
   DSN 291-4350

7. DA Surgeon General
   5109 Leesburg Pike Skyline 6
   Falls Church, VA 22041-3258
   (703) 756-0000
   DSN 289-0000

8. USPHS
   Health, Science and Environment
   Deputy Assistant Secretary
   200 Independence Avenue, SW
   Washington, DC 20201
   (202) 245-6811

9. USPHS Chief Dental Officer
   5600 Fisher Lane, Parklawn Bldg.
   Rockville, MD 20857
   (301) 443-1106

10. USEPA
    Head of Efficacy
    1921 Jefferson Davis Highway
    6 Arlington, VA 22202
    (703) 305-7470
    (800) 447-6349 (EPA Hotline)
    (703) 305-6661 (Antimicrobial Branch)

You can obtain these EPA-registered products lists:

1. List A - Sterilants
2. List B - Tuberculocidal Disinfectants
3. List C - Antimicrobials with HIV Efficacy Claims

11. CDC
    Hospital Infections Program
    1600 Clinton Road, NE
    Atlanta, GA 30333
    (404) 639-3311
    (404) 639-3534 (Publications)

See appendix B for available CDC services.

12. NIOSH
    Technical Information
    4676 Columbia Parkway
    Cincinnati, OH 45226
    (800) 356-4674
    (513) 533-8287

13. NIH
    Occupational Safety and Health Branch
    9000 Rockville Pike
    Bethesda, MD 20892
    (301) 496-2346

14. ADA
    Division of Scientific Affairs
    Chicago, IL 60611

    - Council on Dental Therapeutics
      (312) 440-2528

      BBP/Infection Control
      (800) 621-8099, Ext. 2528

    - Council on Dental Materials, Instruments and Equipment
      (312) 440-2508

      HAZCOM Standard
      (800) 621-8099, Ext. 2507

      MSDS Catalog
      (800) 621-8099, Ext. 3527

    - Division of Legal Affairs
      (800) 621-8099, Ext. 7479

15. American Hospital Association
840 North Lake Shore Drive
Chicago, IL 60611
(312) 280-6000

16. APIC
505 E. Hawley Street
Mundelein, IL 60060
(708) 949-6052

17. American Federation of State, County and Municipal Employees
1625 L Street, NW
Washington, DC 20036-5687
(202) 429-1000

18. Georgia Technical Research Institute
151 Sixth Street
O'Keefe Building
Room 146
Atlanta, GA 30332
(404) 894-7430

APPENDIX A

OSHA ASSISTANCE

Consultation Programs

Consultation assistance is available to employers who want help in establishing and maintaining a safe and healthful workplace. Largely funded by OSHA, the service is provided at no cost to the employer. The consultation service is delivered by state government agencies or universities employing professional safety consultants and health consultants.

Comprehensive assistance includes an appraisal of all mechanical, physical work practice, and environmental hazards of the workplace and all aspects of the employer's present job safety and health program. ***No penalties are proposed or citations issued for hazards identified by the consultant.***

For more information concerning consultation assistance, see the list of consultation projects following.

States with Approved Plans

States administering their own occupational safety and health programs through plans approved under section 18(b) of the Occupational Safety and Health Act of 1970 must adopt standards and enforce requirements that are at least as effective as federal requirements.

There are currently 25 states with approved plans: 23 cover the private and public (state and local government) sectors and 2 cover the public sector only.

COMMISSIONER
Alaska Department of Labor
P.O. Box 21149
Juneau, AK 99801
(907) 465-2700

DIRECTOR
Industrial Commission of Arizona
800 W. Washington
Phoenix, AZ 85007
(602) 542-5795

DIRECTOR
California Department of Industrial Relations
455 Golden Gate Avenue
4th Floor
S. San Francisco, CA 94102
(415) 566-5123

COMMISSIONER
Connecticut Department of Labor
200 Folly Brook Boulevard
Wethersfield, CT 06109
(203) 566-5123

DIRECTOR
Hawaii Department of Labor and Industrial Relations
830 Punchbowl Street
Honolulu, HI 96813
(808) 548-3150

COMMISSIONER
Indiana Department of Labor
1013 State Office Building
100 North Senate Avenue
Indianapolis, IN 46204-2287
(317) 232-2665

COMMISSIONER
Iowa Division of Labor Services
1000 E. Grand Avenue
Des Moines, IA 50319
(515) 281-3447

ACTING COMMISSIONER
for Workplace Standards
Kentucky Labor Cabinet
1049 U.S. Highway, 127 South
Frankfort, KY 40601
(502) 564-3070

COMMISSIONER
Maryland Division of Labor and Industry
Department of Licensing and Regulation
501 St. Paul Place, 2nd Floor
Baltimore, MD 21202-2272
(301) 333-4179

DIRECTOR
Michigan Department of Labor
Victor Office Center
201 N. Washington Square
P.O. Box 30015
Lansing, MI 48933
(517) 373-9600

DIRECTOR
Michigan Department of Public Health
3423 North Logan Street
Box 30195
Lansing, MI 48909
(517) 335-8022

COMMISSIONER
Minnesota Department of Industrial Relations
Division of Occupational Safety and Health
Capitol Complex
1370 S. Curry Street
Carson City, NV 89710
(702) 687-3032

SECRETARY
New Mexico Environment Dept.
Occupational Health and Safety Bureau
1190 St. Francis Drive
P.O. Box 26110
Santa Fe, NM 87502
(505) 827-2850

COMMISSIONER
New York Department of Labor
State Office Building
Campus 12, Room 457
Albany, NY 12240
(518) 457-2741

COMMISSIONER
North Carolina
Department of Labor
4 West Edenton Street
Raleigh, NC 27601
(919) 733-7166

ADMINISTRATOR
Oregon Occupational Safety and Health Division
Oregon Department of Insurance and Finance, Room 160
Labor and Industries Building
Salem, OR 97310
(503) 378-3272

SECRETARY
Puerto Rico Department of Labor and
Human Resources
Prudencio Rivera
Martinez Building
505 Munoz Rivera Avenue
Hato Rey, PR 00918
(809) 754-2119

COMMISSIONER
South Carolina
Department of Labor
3600 Forest Drive
P.O. Box 11329
Columbia, SC 29211-1329
(803) 734-9594

COMMISSIONER
Tennessee Department of Labor
501 Union Building
Suite "A," 2nd Floor
Nashville, TN 37243-0655
(615) 741-2582

ADMINISTRATOR
Utah Occupational Safety and Health
160 East 300 South
P.O. Box 5800
Salt Lake City, UT 84110-5800
(801) 530-6900

COMMISSIONER
Vermont Department of Labor and Industry
120 State Street
Montpelier, VT 05620
(802) 828-2765

COMMISSIONER
Virgin Islands
Department of Labor
2131 Hospital Street
Box 890
Christiansted
St. Croix, VI 00840-4666
(809) 773-1994

COMMISSIONER
Virginia Department of Labor and Industry
Powers-Taylor Building
13 South 13th Street
Richmond, VA 23219
(804) 786-2376

DIRECTOR
Washington Department of Labor and
Industries
General Administration Building
Room 334-AX-31
Olympia, WA 98504-0631
(206) 753-6307

DIRECTOR
Department of Employment
Division of Employment Affairs
Occupational Safety and Health
Administration
Herschler Building, 2nd Floor East
122 West 25th Street
Cheyenne, WY 82002
(307) 777-7786 or 777-7787

Consultation Project Directory

Consultation programs provide free services to employers who request help in identifying and correcting specific hazards, want to improve their safety and health programs, and/or need further assistance in training and education. Funded by OSHA and delivered by well-trained professional staff of state governments, consultation services are comprehensive and include an appraisal of all workplace hazards, practices, and job safety and health programs; conferences and agreements with management; assistance in implementing recommendations; and a follow-up appraisal to ensure that any required corrections are made.

For more information on consultation programs, contact the appropriate office in your state listed below.

State	Telephone
Alabama	(205) 348-3033
Alaska	(907) 264-2599
Arizona	(602) 255-5795
Arkansas	(501) 682-4522
California	(415) 737-2843
Colorado	(303) 491-6151
Connecticut	(203) 566-4550
Delaware	(302) 577-3908
District of Columbia	(202) 576-6339
Florida	(904) 488-3044
Georgia	(404) 894-8274
Guam	(671) 646-9244
Hawaii	(808) 548-4155
Idaho	(208) 385-3283
Illinois	(312) 814-2339
Indiana	(317) 232-2688
Iowa	(515) 281-5352
Kansas	(913) 296-4386
Kentucky	(502) 564-6895
Louisiana	(504) 342-9601
Maine	(207) 289-6460
Maryland	(301) 333-4218
Massachusetts	(617) 727-3463
Michigan	(517) 335-8250 (Health) (517) 322-1809 (Safety)
Minnesota	(612) 297-2393
Mississippi	(601) 987-3981
Missouri	(314) 751-3403
Montana	(406) 444-6401
Nebraska	(402) 471-4717
Nevada	(702) 688-1474

New Hampshire	(603) 271-3170
New Jersey	(609) 292-0404
New Mexico	(505) 827-2885
New York	(518) 457-2481
North Carolina	(919) 733-3949
North Dakota	(701) 221-5188
Ohio	(614) 644-2631
Oklahoma	(405) 528-1500
Oregon	(503) 378-3272
Pennsylvania	(412) 357-2561
	(800) 382-1241
Puerto Rico	(809) 754-2171
Rhode Island	(401) 277-2438
South Carolina	(803) 734-9599
South Dakota	(605) 688-4101
Tennessee	(615) 741-7036
Texas	(512) 440-3834
Utah	(801) 530-6868
Vermont	(802) 828-2765
Virginia	(804) 786-6613
Virgin Islands	(809) 772-1315
Washington	(206) 586-0963
West Virginia	(304) 348-7890
Wisconsin	(608) 266-8579 (Health)
	(414) 521-5063 (Safety)
Wyoming	(307) 777-7786

Training and Education

OSHA's area offices offer a variety of informational services, such as publications, audiovisual aids, technical advice, and speakers for special engagements. Each regional office has a bloodborne pathogens coordinator to assist employers.

OSHA's Training Institute in Des Plaines, IL, provides basic and advanced courses in safety and health for federal and state compliance officers, state consultants, federal agency personnel, and private sector employers, employees, and their representatives.

For more information on training and education, contact the OSHA Training Institute, Office of Training and Education, 1555 Times Drive, Des Plaines, IL 60018, (708)297-4810.

Voluntary Protection Programs

The Voluntary Protection Programs (VPPs) represent one part of OSHA's effort to extend worker protection beyond the minimum required by OSHA standards. These programs, along with others such as expanded on-site consultation services and full-service area offices, are cooperative approaches which, when coupled with an effective enforcement program, expand worker protection to help meet the goals of the Occupational Safety and Health Act of 1970.

The three VPPs--Star, Merit, and Demonstration--are designed to:

- Recognize outstanding achievement of those who have successfully incorporated comprehensive safety and health programs into their total management system;
- Motivate others to achieve excellent safety and health results in the same outstanding way; and
- Establish a relationship between employers, employees, and OSHA that is based on cooperation rather than coercion.

The **Star Program** is the most demanding and the most prestigious. It is open to an employer in any industry who has successfully managed a comprehensive safety and health program to reduce injury rates below the national average for the industry. Specific requirements for the program include: management commitment and employee participation; a high-quality worksite analysis program; hazard prevention and control programs; and comprehensive safety and health training for all employees. These requirements must all be in place and operating effectively.

The **Merit Program** is primarily a stepping stone to Star Program participation. An employer with a basic safety and health program built around the Star requirements, who is committed to improving the company's program and who has the resources to do so within a specified period of time, may work with OSHA to meet Star qualifications.

The **Demonstration Program** is for companies that provide Star-quality worker protection in industries where certain Star requirements may not be appropriate or effective. It allows OSHA both the opportunity to recognize outstanding safety and health programs that would otherwise be unreached by the VPP and to determine if general Star requirements can be changed to include these companies as Star participants.

OSHA reviews an employer's VPP application and conducts an on-site review to verify that the safety and health program described is in operation at the site. Evaluations are conducted on a regular basis, annually for Merit and Demonstration programs, and triennially for Star. All participants must send their injury information annually to their OSHA regional office. Sites participating in the VPP are not scheduled for programmed inspections; however, any employee complaints, serious accidents, or significant chemical releases that may occur are handled according to routine enforcement procedures.

An employer may make application for any VPP at the nearest OSHA regional office. Once OSHA is satisfied that, on paper, the employer qualifies for the program, an on-site review will be scheduled. The review team presents its findings in a written report for the company's review prior to submission to the Assistant Secretary of Labor, who heads OSHA. If approved, the employer receives a letter from the Assistant Secretary informing the site of its participation in the VPP. A certificate of approval and flag are presented at a ceremony held at or near the approved worksite. Star sites receiving reapproval after each triennial evaluation receive plaques at similar ceremonies.

The VPPs described are available in states under federal jurisdiction. Some state plan states have similar ceremonies. Interested companies in these states should contact the appropriate state designee for more information.

Additional information on the VPP is available from OSHA national, regional, and area offices (see list on page 4-13 of Module 4).

U.S. Department of Labor
Occupational Safety and Health Administration
Regional Offices

Region I
(CT,* MA, ME, NH, RI, VT*)
133 Portland Street
1st Floor
Boston, MA 02114
Telephone: (617)565-7164

Region II
(NJ, NY,* PR,* VI*)
201 Varick Street
Room 670
New York, NY 10014
Telephone: (212)337-2378

Region III
(DC, DE, MD,* PA, VA,* WV)
Gateway Building, Suite 2100
3535 Market Street
Philadelphia, PA 19104
Telephone: (215)596-1201

Region IV
(AL, FL, GA, KY,* MS, NC,* SC,* TN*)
1375 Peachtree Street, N.E.
Suite 587
Atlanta, GA 30367
Telephone: (404)347-3573

Region V
(IL, IN,* MI,* MN,* OH, WI)
230 South Dearborn Street
Room 3244
Chicago, IL 60604
Telephone: (312)353-2220

Region VI
(AR, LA, NM,* OK, TX)
525 Griffin Street
Room 602
Dallas, TX 75202
Telephone: (214)767-4731

Region VII
(IA,* KS, MO, NE)
911 Walnut Street, Room 406
Kansas City, MO 64106
Telephone: (816)426-5861

Region VIII
(CO, MT, ND, SD, UT,*, WY*)
Federal Building, Room 1576
1961 Stout Street
Denver, CO 80294
Telephone: (303)844-3061

Region IX
(American Samoa, AZ,* CA,* Guam, HI,* NV,* Trust Territories of the Pacific)
71 Stevenson Street
Room 415
San Francisco, CA 94105
Telephone: (415)744-6670

Region X
(AK,* ID, OR,* WA*)
1111 Third Avenue
Suite 715
Seattle, WA 98101-3212
Telephone: (206)553-5930

* These states and territories operate their own OSHA-approved job safety and health programs (Connecticut and New York plans cover public employees only). States with approved programs must have a standard that is identical to, or at least as effective as, the federal standard.

US DOL OSHA AREA OFFICES

State		Telephone
Alabama	Birmingham	205-731-1534
Alaska	Anchorage	907-271-5152
Arizona	Phoenix	602-640-2007
Arkansas	Little Rock	501-378-6291
California	San Diego	619-569-9071
	San Francisco	415-744-7120
Colorado	Denver	303-844-5285
Connecticut	Hartford	203-240-3152
Florida	Fort Lauderdale	305-527-7292
	Jacksonville	904-791-2895
	Tampa	813-228-2821
Georgia	Tucker	404-331-4767
Hawaii	Honolulu	808-541-2685
Idaho	Boise	208-334-1867
Illinois	Calumet City	708-891-3800
	Des Plaines	708-803-4800
	North Aurora	708-896-8700
	Peoria	309-671-7033
Indiana	Indianapolis	317-331-7290
Iowa	Des Moines	515-284-4794
Kansas	Wichita	316-269-6644
Kentucky	Frankfort	502-227-7024
Louisiana	Baton Rouge	504-389-0474
Maine	Augusta	207-622-8417
Maryland	Baltimore	301-962-2840
Massachusetts	North Boston	617-565-8110
	South Boston	617-565-6924
	Springfield	203-240-3152
Michigan	Lansing	517-377-1892
Minnesota	Minneapolis	612-348-1994
Mississippi	Jackson	601-965-4606
Missouri	Kansas City	816-426-2756
	St. Louis	314-263-2749
Montana	Billings	406-657-6649
Nebraska	Omaha	402-221-3182
Nevada	Carson City	702-885-6963
New Hampshire	Concord	603-225-1629
New Jersey	Avenel	201-750-3270
	Dover	201-361-4050
	Hasbrouck Heights	201-288-1700
	Marlton	609-757-5181

New Mexico	Albuquerque	505-776-3411
New York	Albany	518-472-6085
	Bayside	718-279-9060
	Bowmansville	716-684-3891
	New York	212-264-9840
	Syracuse	315-423-5188
	Westbury	516-334-3344
North Carolina	Raleigh	919-856-4770
North Dakota	Bismarck	701-250-4521
Ohio	Cincinnati	513-684-3784
	Cleveland	216-522-3818
	Columbus	614-469-5582
	Toledo	419-259-7542
Oklahoma	Oklahoma City	405-231-5351
Oregon	Portland	503-326-2251
Pennsylvania	Allentown	215-776-0592
	Erie	814-453-4351
	Harrisburg	717-782-3902
	Philadelphia	215-597-4955
	Pittsburgh	412-644-2903
	Wilkes-Barre	717-821-4170
Puerto Rico	Hato Rey	809-766-5457
Rhode Island	Providence	401-528-4669
South Carolina	Columbia	803-765-5904
Tennessee	Nashville	615-736-5313
Texas	Austin	512-482-5783
	Corpus Christi	512-888-3257
	Fort Worth	817-885-7025
	Houston	713-750-1727
	Irving	214-767-5347
	Lubbock	806-743-7681
Utah	Salt Lake City	801-524-5080
Washington	Bellevue	206-442-7520
West Virginia	Charleston	304-347-5937
Wisconsin	Appleton	414-734-4521
	Madison	608-264-5388
	Milwaukee	414-297-3315

APPENDIX B

CDC SOURCE LIST

The USDHHS, USPHS, and CDC created the CDC National AIDS Information and Education Program. This program informs and educates Americans about HIV infection and AIDS. The major program components are:

- CDC National Media Campaign. Develops and markets America Responds to AIDS materials and strategies to (1) stimulate mass communication systems to deliver appropriate HIV and AIDS messages to the American public, and (2) direct individuals to the CDC National AIDS Hotline for further information and assistance.

- CDC National AIDS Hotline--a 24-hour toll-free service that provides confidential information, referrals, and educational materials to the public.

  National AIDS Hotline
  1-800-342-AIDS (2437)

  Special Service
  1-800-344-7432 (Service en Espanol)
  1-800-243-7889 (TTY-Access for the hearing impaired)

- Current USPHS hepatitis B vaccination recommendations, call CDC:

  Disease Information Hotline
  (404)332-4555

- CDC National AIDS Clearinghouse provides information on HIV/AIDS resource organizations, educational materials, clinical trials,* and funding sources to professionals involved in the development and delivery of HIV-prevention programs. To reach by phone, call Monday through Friday, 9 a.m. to 7 p.m. Eastern time:

  1-800-458-5231
  1-800-243-7012 (TTY/TDD)
  1-800-874-2572 (Clinical Trials)

---

* CDC facilitates access to information about clinical trials provided through the AIDS Clinical Trials Information Service (ACTIS), a cooperative interagency effort of the National Institute of Allergy and Infectious Diseases, National Library of Medicine, and Food and Drug Administration.

MODULE 5:

QUESTIONS AND ANSWERS

REGARDING THE STANDARD

COMMONLY ASKED LEGAL QUESTIONS ABOUT THE STANDARD

Facts About the Standard

1. What is the standard?

The OSHA BBP standard is a comprehensive rule that sets forth the specific requirements OSHA believes will prevent the transmission of bloodborne diseases to employees. It imposes a number of requirements. Employers covered by the standard must make exposure determinations and develop an ECP. They must also use engineering and work practice controls to prevent employee exposure and develop a system to evaluate exposure incidents. It requires training all employees who provide or assist in providing patient care, as well as those who clean operatories, instruments, and gowns.

2. Who is covered by the standard?

Any employer who has **one or more** employees with occupational exposure to blood or OPIM, including saliva. OSHA defines "employee" broadly to include part-time, temporary, and probationary workers.

3. What about states that have their own OSHA plans?

The 25 states and territories with their own OSHA plans must adopt the same rule (or a similar rule that is at least as strict). These states and territories are: Alaska, Arizona, California, Connecticut,* Hawaii, Indiana, Iowa, Kentucky, Maryland, Michigan, Minnesota, Nevada, New Mexico, New York,* North Carolina, Oregon, Puerto Rico, South Carolina, Tennessee, Utah, Vermont, Virginia, Virgin Islands, Washington, and Wyoming.

* The state plan in these two states covers only local and state government employees.

4. Why does the standard include saliva in dental procedures as a potentially infectious material when OSHA's true concern is *bloodborne* diseases?

OSHA includes saliva in dental procedures in the definition of OPIM because saliva may mix with blood in some dental procedures. OSHA concluded, therefore, that you should treat saliva as potentially infectious even though scientists believe that bloodborne diseases are not transmitted via saliva.

Who is Covered?

1. I employ a part-time dental assistant. Is she an "employee" according to OSHA?

Yes. Again, OSHA defines "employee" broadly to include those who are part time, temporary, and probationary.

2. What about a receptionist?

This individual is an "employee," but duties for a receptionist are probably different than duties for a chairside assistant. You must evaluate the duties involved in each job to determine the risks. If your receptionist is responsible for cleaning the operatory between patients, s/he is likely considered at risk of exposure to blood and OPIM and the standard would apply. If your receptionist is exposed to hazardous chemicals, the hazard communication standard would apply.

3. Student interns work in my facility. Are they "employees"?

The best answer is that students are not your employees unless you pay their wages. Note: OSHA might argue that students are treated as your employees if you receive the benefit of their work, although you may not pay them.

Inspections

1. How likely is it that OSHA will inspect my facility?

The chances are extremely small, unless one of your employees files a complaint. OSHA has jurisdiction over more than 5 million workplaces nationwide. It can't inspect them all, so it has set the following inspection priorities:

- Where there is imminent danger of death or serious bodily harm
- Where a fatality has occurred
- Based on a complaint from an employee
- Random or "programmed" inspections

2. What happens if an employee files a complaint?

If OSHA believes the complaint provides probable cause that a violation exists, it probably will conduct an inspection. This is true whether the complaint is from a current employee or a former employee.

If OSHA does not believe an inspection is warranted, it may send you a letter instead. This is more likely to happen in the case of a complaint from a former employee. The letter will state the substance of the complaint and will ask you to respond in writing to the alleged violations and to describe the steps you will take to correct them. This could end the inquiry, or OSHA might follow-up with an inspection if it is not satisfied with your response or if the response indicates other problem areas. Take care when responding to a letter from OSHA. You should not, for example, admit to violations you do not believe exist, or agree to abate them. They might use the response as evidence against you later.

3. How will OSHA treat a complaint from a patient?

OSHA is authorized to protect the safety and health of employees--not patients. Patient safety is the responsibility of the state medical and dental boards. However, a patient complaint could give OSHA probable cause to believe that the safety or health of an employee is at risk. In that case, OSHA, in all likelihood, would conduct an inspection, or send a letter, as described above.

4. Can I find out who filed a complaint against me?

No. Complainants are guaranteed anonymity. Also, OSHA may penalize you for taking retaliatory action against the employee who you suspect filed the complaint.

5. Will I have advance warning of an inspection?

Probably not. You have no right to advance warning.

6. Don't I have any rights when the inspector comes to my door?

You *do* have rights. First and foremost is your right under the Fourth Amendment for freedom from unreasonable searches and seizures. The U.S. Supreme Court has interpreted the Fourth Amendment as giving employers the right to demand a warrant from an OSHA inspector. There are advantages and disadvantages to exercising this right. The advantages are that it will give you time to prepare by rearranging your patient schedule or limiting the scope of the inspection. If you waive your right to a warrant, essentially everything in the facility is fair game for the inspector.

The primary disadvantage of demanding a warrant is that the inspector will almost certainly get it and be more aggressive when s/he returns. Also, the warrant could then cover almost everything in the facility anyway.

You also have the right to a copy of the complaint against you, the right of presence during the inspection, and the right to accompany the inspector.

7. What could happen to me if I simply refuse to let the inspector in?

If the inspector does not already have a warrant, s/he will get one. You have the right to challenge the application for a warrant. If you refuse to let the inspector in with a proper warrant, OSHA will probably ask the court for a contempt order. You are also entitled to challenge this request. If a contempt order is granted, you have two options: (1) let the inspector in or (2) appeal to a higher court. However, in order to appeal you must continue to resist the inspection.

8. How do I know if someone who comes to my door is, in fact, an OSHA inspector?

Inspectors carry a badge and card that identify them as OSHA inspectors. Persons who falsely represent themselves as federal officers are guilty of a crime.

9. Can I limit where the inspector goes and what the inspector looks at in my facility?

To some extent. If you demand a warrant, the inspection should limit what is stated in the warrant, and the warrant should limit what is stated in the complaint. You should compare the complaint with the warrant to make sure they are consistent. For example, if the complaint alleges that you did not provide BBP training, the warrant should limit things bearing on that charge. If you believe the warrant is too broad, or if the inspector tries to go beyond what is stated in the warrant, you have the option of calling off the inspection. See question 7 for what would happen in that case.

Once in the workplace, the inspector can investigate any other violations s/he has probable cause to believe may exist. Probable cause is based on something the inspector learns during an interview with an employee or on something the inspector observes in plain sight.

There is one other important limitation on where the inspector is permitted to go. Patients have privacy rights that are not superseded by OSHA. OSHA Instruction CPL 2-2.44C instructs inspectors to respect the privacy of patients. If he/she wants to enter an area where a patient is treated, you should seriously consider denying the inspector access while the patient is in the room unless you obtain the patient's consent. However, this could result in a legal confrontation with OSHA.

10. Can I tell my employees not to let the inspector in if I am out of the facility?

Yes. Your legal rights are at stake, and you are entitled to presence to protect them. If you allow an employee to act in your place, you consider s/he your agent with authority to waive your legal rights and make statements that they may later use against you.

11. Do I have the right of presence during the entire inspection?

Yes, except during interviews with employees. OSHA takes the position that they may conduct employee interviews in private. However, the employee is entitled to ask for your presence during the interview.

12. Can OSHA interview all my employees?

Probably not. OSHA has the right to interview a reasonable sampling of your employees. Of course, OSHA will say that what is reasonable depends on the facts and circumstances in each case. Again, if you feel the inspector is going too far, you should consider objecting.

13. Can I choose the employees the inspector can interview?

No.

14. Do I have the right to insist that the inspector come back at a more convenient time?

Possibly. The law authorizes a reasonable intrusion at reasonable times. You could argue that an inspection is unreasonable if it would disrupt patient care or prevent your presence during the inspection. You can always ask the inspector to reschedule the inspection at a more convenient time to ensure your presence. The inspector might agree if there is no warrant involved.

15. What if the inspector refuses to reschedule?

Your options are then to admit the inspector (and thereby waive any objection you may have to the unreasonableness of the inspection) or refuse to let the inspector in. See question 7 for what would happen in that case.

16. Is there any limit on how long an inspector can take to inspect a facility?

There is no set length of time. Inspections of some facilities have lasted from less than three hours to as long as three days. The law emphasizes the reasonableness of the search. You always have the right to object when you feel the inspection has gone beyond the bounds of reason. However, take care not to give the inspector the impression you have something to hide.

17. Will the inspector tell me what violations s/he's found before leaving my facility?

Usually the inspector will conduct what is known as an "exit interview" or "closing conference." In this conference, the inspector will tell you what are the maximum potential penalties. The inspector also may try to convince you to abate these violations.

Take care about accepting the inspector's conclusions concerning the existence of violations. Some of these conclusions are arguable. Others may be just plain wrong. Just because the inspector says something is a violation doesn't make it so. Also, take care about consenting-- even conditionally--to abate something you do not think is a violation. One can interpret this as an admission that a violation exists. You should listen and ask questions, but it is probably a good idea to tell the inspector you will take any recommendations "under advisement."

Citations and Penalties*

1. Let's say I'm inspected by OSHA. What happens next?

The next thing that happens is the inspector reports his/her findings to the OSHA area office and a decision is made whether any violations exist. If OSHA believes violations exist, they will notify you by mail in the form of an official Notice of Unsafe or Unhealthful Working Conditions, OSHA Form 2H. This document tells you: (1) what violations were found, (2) what you must do to abate them, (3) by when, and (4) the penalties. A sample OSHA Form 2H is provided on the following page.

2. What if I disagree with the citation?

You have the right to contest a citation and/or proposed penalty as long as you file the notice of contest within 15 working days after you receive the citation. ***If you do not file the notice of contest within 15 working days, you forfeit forever your right to contest the citation and/or proposed penalty.*** In that case, you do whatever OSHA requires to abate the violation.

An OSHA information booklet enclosed with the citation explains who should file the notice of contest and your other rights and responsibilities. These include your responsibility to post the citation for at least three days where employees can see it and your right to participate in an informal conference.

3. How does the informal conference work?

You are entitled to request an informal conference with the OSHA area director who issued the citation. The purpose of the conference is to discuss the citation and proposed penalty and try to reach a settlement. You must post the request for an informal conference where employees can see it. You must hold the conference during the 15-day period for filing the notice of contest. The area director has no authority to change a citation or penalty after 15 days have elapsed. The informal conference does not stop the 15 days from running.

---

* As of August 1993, OSHA cites, but assesses no monetary penalties to, federal facilities. However, if the bill currently in Congress becomes law, OSHA may begin assessing monetary penalties to federal facilities.

The area director is authorized, within limits, to adjust the citation or penalty at the informal conference. Generally, informal conferences only result in penalty reductions, but employers have negotiated sizable reductions. This is the primary advantage of the informal conference.

There are, however, disadvantages. The conference is recorded. It is easy to make statements that could jeopardize your ability to contest the citation later. These include admissions about the existence of a violation or an agreement to abate that might infer the existence of a violation. Also, you might abide by any settlement reached at the conference. If the settlement requires you to abate a condition and you fail to do so, OSHA will subject you to far heavier penalties the next time around.

4. Can OSHA cite me for a past violation; for example, for not offering the hepatitis B vaccine to someone who no longer works for me?

The rule is that OSHA may cite you for a violation that occurred up to six months prior to the issued citation. OSHA may not cite you for a violation that occurred more than six months prior unless they can characterize the violation as continuing in nature.

5. What type of penalties can OSHA assess?

With one exception, OSHA penalties are limited to fines.* The exception is a willful violation that results in the death of an employee, for that the employer can be sentenced up to six months' imprisonment.

Challenges to Citations and Proposed Penalties

How do I challenge citations and penalties?

By filing a notice of contest within 15 working days of the date you receive the Notice of Unsafe or Unhealthful Working Conditions. The notice of contest is filed with the director of the OSHA area office that issued the citation. The director will forward the notice to the Occupational Safety and Health Review Commission (OSHRC) in Washington, D.C., where it will docket and assign a case number. You must post the notice of contest and a form telling employees they have the right to participate in the contest. This requirement is important. Failure to inform employees could result in dismissing the case.

---

* As of August 1993, OSHA cites, but does not monetarily fine, federal facilities. However, if the bill currently in Congress becomes law, OSHA may begin assessing monetary penalties to federal facilities.

Next, the solicitor of labor, the government lawyer who will prosecute the case, will issue a complaint. He must issue the complaint within 30 days after the notice of contest is filed with OSHRC unless the solicitor is granted more time. You will then have 30 days to file an answer to the complaint.

The case is assigned to an administrative law judge (ALJ). You may engage in limited discovery. Discovery is the process by which you try to discover the strengths and weaknesses of your opponent's case. It includes reviewing documents, taking testimony from witnesses, and reviewing questions under oath.

A hearing is scheduled in the city closest to your facility. The hearing is like a trial, but less formal. The ALJ is the judge. There is no jury.

After the hearing, you have the right to submit written arguments. Then the case is ready for decision by the ALJ. A party who is unhappy with the ALJ's decision can appeal to OSHRC, and ultimately to the U.S. Court of Appeals.

Miscellaneous

1. How can I find out what OSHA requires me to do?

You should obtain and carefully review the OSHA Instruction CPL 2-2.44C, dated March 6, 1992, Enforcement Procedures for Occupational Exposure to Hepatitis B Virus and Human Immunodeficiency Virus. This document is what OSHA gives its inspectors to guide them while inspecting for infection control violations. It is available free of charge from your area OSHA office.

The following informational brochures are also available from OSHA:

- OSHA 2056, "All About OSHA"
- OSHA 2098, "OSHA Inspections"
- OSHA 3021, "OSHA: Employee Workplace Rights"
- "Recordkeeping Guidelines for Occupational Injuries and Illnesses"
- OSHA 3077, "Personal Protective Equipment"
- OSHA 3110, "Access to Medical and Exposure Records"
- OSHA 3127, "Occupational Exposure to Bloodborne Pathogens"
- OSHA 3128, "Bloodborne Pathogens and Acute Care Facilities"
- OSHA 3131, "Bloodborne Pathogens and Long-Term Care Workers"
- OSHA 3130, "Occupational Exposure to Bloodborne Pathogens: Precautions for Emergency Responders"
- OSHA 3129, "Controlling Occupational Exposure to Bloodborne Pathogens in Dentistry"
- "Employer Rights and Responsibilities Following an OSHA Inspection"

You can obtain free copies of these publications from the OSHA Publications Office, U.S. Department of Labor, 200 Constitution Avenue, N.W., Room N-3101, Washington, D.C. 20210; (202) 523-9667.

Employers should keep in mind that these documents reflect OSHA's interpretation of the law. This interpretation is not always correct. In particular, OSHA Instruction CPL 2-2.44C, which applies to all types of healthcare facilities, may overstate what medical professionals must do in the area of infection control.

2. I have heard that OSHA will inspect my facility on a consultation basis, with no penalties attached. Is this a good idea?

Federal OSHA does not provide consultation services. However, it does have agreements with state agencies to conduct consultations. You can obtain the name of the agency in your state that provides this service by calling your area OSHA office. See the "Blue Pages" in your telephone directory under the heading "United States Government--Labor Department--Occupational Safety and Health" for the number.

There are pluses and minuses to requesting a consultation. A consultation is conducted essentially like a compliance inspection. The consultation looks for violations of OSHA standards and interpretations of law. A problem could arise in the area of infection control where disputes exist about what the law provides.

The consultant will advise you of any violations that pose an imminent danger or serious hazard. OSHA will not penalize you for these violations, but you must abate them. The consultant may return to see if you have abated them. Failure to abate can lead to a referral to OSHA for a compliance inspection.

If you accept the consultant's recommendations, OSHA may consider any relapse a willful violation resulting in a penalty.

However, if you do abate in accordance with the advice of the consultant, you are exempt from a random compliance inspection for one year. If you later are cited for something that passed inspection by the consultant, you can use this in your defense.

3. Can an employee refuse to comply with OSHA requirements?

OSHA will not penalize the employee for refusing, but it may penalize you if you don't take steps to make sure the employee complies. OSHA expects you to enforce compliance with its rules by making them part of your office procedure, communicating them to employees, inspecting to make sure they are followed, and disciplining employees who commit violations.

An exception is made for immunization and medical evaluation. An employee is entitled, like anyone else, to refuse medical treatment. But in this case, you should have the employee sign an "informed refusal" form, and keep the form with your records.

4. Couldn't I make it a condition that my employees are vaccinated for hepatitis B before they begin work?

Probably. OSHA doesn't prohibit it. But you should check with SJA and/or the attorney general to make sure there is no law that would make it illegal.

5. Why did OSHA adopt the standard?

The reason is AIDS. OSHA also is concerned about hepatitis B and other bloodborne diseases, but AIDS is the disease that prompted regulatory action. In 1986, unions representing healthcare workers petitioned OSHA for an emergency rule to protect their members from workplace exposure to the HIV and HBV. OSHA denied the petition but agreed to adopt a permanent rule on exposure to BBP through the regular rulemaking process. It took five years to develop the rule. It applies to hospitals, physicians' offices, nursing homes, other healthcare settings, emergency response personnel, funeral homes, and dental offices.

6. Where may I go for further information from OSHA?

Contact the OSHA regional offices listed in appendix 4-A of module 4 of this TG.

MODULE 6:

CHECKLISTS

Exposure Control Checklist

1. Does your ECP identify in writing:

   - All employees who have a reasonable likelihood of occupational exposure during the performance of their assigned duties without regard to the use of PPE? Yes__ No__

   - The schedule and procedures for implementing *all* the provisions of the standard? Yes__ No__

   - The method for evaluation of exposure incidents that includes appropriate corrective action to be taken? Yes__ No__

2. Have you established a mechanism for annual review and update of the ECP? Yes__ No__

3. Is the ECP accessible to all employees? Yes__ No__

4. Do your policies and procedures--which identify department head, manager, and staff responsibilities--comply with recommended practices? Yes__ No__

5. Do your policies and procedures include:

   - Employee responsibilities? Yes__ No__

   - Recommended practices? Yes__ No__

   - Compliance monitoring procedures? Yes__ No__

   - Noncompliance reporting and documenting procedures? Yes__ No__

   - Monitoring follow-up procedures? Yes__ No__

   - Actions taken for noncompliance? Yes__ No__

Engineering and Work Practice Controls Checklist

1. Are handwashing facilities--with soap, warm running water, and paper towels--reasonably accessible to employees? Yes__ No__

2. If handwashing facilities are not accessible, are appropriate alternatives provided such as antiseptic hand cleaners in conjunction with a clean cloth or paper towel or antiseptic towelettes? Yes__ No__

3. Do you evaluate safe needle devices for their appropriateness and efficacy? Yes__ No__

   - After efficacy is established, do you make these devices available to employees? Yes__ No__
   - Do you train employees to properly use these devices? Yes__ No__

4. Do you have written policies that:

   - Prohibit recapping needles using a two-handed technique? Yes__ No__
   - Prohibit removing uncapped needles from syringes by hand? Yes__ No__
   - Prohibit bending, shearing, or breaking contaminated sharps? Yes__ No__
   - Specify situations where recapping is allowed and safe practices or devices are required to reduce the risk of a needlestick? Yes__ No__
   - Specify the safe practices to use when handling or reprocessing reusable sharps? Yes__ No__
   - Require the use of mechanical means (e.g., dust pan and brush) to clean up broken glass? Yes__ No__

5. Do you have a schedule and method for determining the need for replacing sharps containers? Yes__ No__

6. Are the containers used to **store** or **transport** contaminated reusable sharps:

- Puncture resistant and leakproof? Yes__ No__
- Red in color or labeled with the biohazard symbol? Yes__ No__

7. Are the containers used for **disposing** of contaminated sharps:

- Closable, puncture resistant, and leakproof on sides and bottom? Yes__ No__
- Red in color or labeled with the biohazard symbol? Yes__ No__
- Located as close as feasible to the area of use? Yes__ No__
- Also located in areas where sharps are not normally used, but can be reasonably anticipated to be found, such as the laundry? Yes__ No__
- Replaced when no more than 3/4 full? Yes__ No__
- Maintained in an upright position during transport? Yes__ No__

8. In contaminated work areas, are employees instructed not to:

- Eat or drink? Yes__ No__
- Smoke? Yes__ No__
- Apply cosmetics or lip balm? Yes__ No__
- Handle contact lenses? Yes__ No__
- Chew gum? Yes__ No__
- Use smokeless tobacco? Yes__ No__

9. Is training provided to employees so that they:

- Perform procedures, which may create splashing or spraying of blood or OPIM, in a manner that reduces risk of exposure? Yes__ No__
- Recognize specimen containers as containing potentially infectious materials? Yes__ No__
- Use universal precautions when handling all specimens? Yes__ No__

10. Are containers that are used to transport specimens appropriately labeled? Yes__ No__

11. Are employees instructed to place all potentially contaminated or leaking specimen containers in a secondary container that is leakproof, puncture resistant, and labeled? Yes__ No__

12. Are appropriate sized secondary containers:

- Available? Yes__ No__
- Used when needed? Yes__ No__

13. Is contaminated equipment decontaminated prior to servicing? Yes__ No__

14. If decontamination is not possible, is the equipment labeled and does it specify which portions of the equipment remain contaminated? Yes__ No__

Personal Protective Equipment Checklist

1. Have you reviewed job duties with occupational exposure to determine the appropriate PPE? Yes__ No__

2. Have you provided PPE to the employees that is:

   - Appropriate to the task performed? Yes__ No__
   - Effective in preventing the penetration of blood or OPIM? Yes__ No__
   - Free of charge? Yes__ No__
   - Accessible and conveniently located? Yes__ No__
   - Available in proper sizes? Yes__ No__

3. Do you have a mechanism in place for:

   - Cleaning, laundering, or disposing of employees' PPE? Yes__ No__
   - Replacing or washing employer-provided uniforms if they are contaminated? Yes__ No__
   - Repairing, replacing, or reprocessing protective barriers and clothing? Yes__ No__

4. Does employee training include PPE:

   - Selection? Yes__ No__
   - Proper use? Yes__ No__
   - Replacement? Yes__ No__
   - Disposal? Yes__ No__

5. Does employee training also include the need to remove protective clothing and proper removal procedures:

   - Prior to leaving the work area? Yes__ No__
   - When it is penetrated by blood or OPIM? Yes__ No__

6. Do you provide gloves to the employees:

- In accessible locations? Yes__ No__
- Suitable for the tasks performed? Yes__ No__

7. Do you require wearing gloves:

- When there is reasonable likelihood of contact with blood or OPIM? Yes__ No__
- During all vascular access procedures? Yes__ No__
- When there is contact with mucous membranes and nonintact skin? Yes__ No__
- When contaminated items or surfaces are handled? Yes__ No__

8. Are alternative types of gloves provided for employees who are allergic to the standard hospital-style latex gloves? Yes__ No__

9. Do the written procedures prohibit the reuse of disposable gloves? Yes__ No__

10. Regarding reusable gloves, do the written procedures specify:

- Methods for decontamination? Yes__ No__
- Indications for replacement? Yes__ No__
- Length of use? Yes__ No__

11. Do you provide solid face and eye protection when there is a potential for splashing, spraying, or spattering of blood or OPIM? Yes__ No__

12. Have you provided side shields for protective eyewear? Yes__ No__

13. Are emergency ventilation devices available for use in emergency resuscitation? Yes__ No__

Housekeeping Checklist

1. Are there written procedures for cleaning and decontaminating:

- Environmental surfaces (e.g., floors)? Yes__ No__
- Work surfaces? Yes__ No__
- Equipment? Yes__ No__

2. Do cleaning and decontaminating procedures specify products used and the use dilutions? Yes__ No__

3. Do the written procedures specify decontaminating work surfaces? Yes__ No__

- Upon completing a procedure? Yes__ No__
- After overt contamination during a procedure? Yes__ No__
- At the end of the work shift? Yes__ No__

4. Are written procedures established for reusable trash receptacles used to hold contaminated items, including:

- A regular schedule for inspecting and decontaminating containers? Yes__ No__
- Procedures for cleaning and decontaminating when visibly contaminated? Yes__ No__

5. Has the definition of regulated waste been reviewed and revised so it is consistent with OSHA's definition? Yes__ No__

6. Are the containers for regulated waste:

- Closable? Yes__ No__
- Leakproof? Yes__ No__
- Puncture resistant for contaminated sharps? Yes__ No__
- Labeled or color-coded per paragraph (g)(1)(i) of the standard? Yes__ No__

7a. Are secondary containers provided when the outside of the primary container is contaminated? Yes__ No__

7b. Do secondary containers meet the same requirements as the primary containers? Yes__ No__

8. Does your Exposure Control Plan's procedures for handling, bagging, and transporting contaminated laundry:

- Prohibit sorting or rinsing in patient areas? Yes__ No__
- Specify the types of bags or containers employees will use to prevent leakage? Yes__ No__
- Specify alternative labeling when universal precautions are used for handling all contaminated laundry? Yes__ No__

9. Does your employee training cover all procedures for identifying, handling, bagging, and transporting contaminated laundry? Yes__ No__

10a. Do you provide laundry employees with appropriate PPE to prevent occupational exposure? Yes__ No__

10b. Are these employees trained on its proper use? Yes__ No__

HIV and HBV Research Laboratories Checklist

1. Are employees using standard microbiological practices? Yes__ No__

2. Are these special practices followed:

   - Appropriate warning signs posted at the entrance(s)? Yes__ No__
   - Access limited to authorized persons? Yes__ No__
   - Lab doors remain closed while work is in progress? Yes__ No__
   - Contaminated materials are properly and adequately packaged for removal from work area to decontamination site? Yes__ No__
   - All work areas are properly identified and labeled to warn of biohazards? Yes__ No__
   - Appropriate PPE is provided and maintained at no cost to employees? Yes__ No__
   - PPE is used by all employees (smocks, gowns, gloves, lab coats, uniforms, etc.)? Yes__ No__
   - PPE is decontaminated before laundering? Yes__ No__
   - PPE is not worn outside the containment module? Yes__ No__
   - All activities involving infectious agents are carried out in BSCs within the containment module? Yes__ No__
   - All waste from work areas is effectively decontaminated by incineration, autoclaving, or equivalent before disposal? Yes__ No__
   - Vacuum lines are protected with liquid disinfectant traps and HEPA filters, or equivalent? Yes__ No__
     - These traps and filters are routinely checked and maintained? Yes__ No__

- Needles and syringes are placed in puncture-resistant containers promptly after use? Yes__ No__
  - These containers (and contents) are decontaminated before reuse or disposal? Yes__ No__
  - Absolutely no manipulation of needles and syringes takes place? Yes__ No__
  - No needles are resheathed? Yes__ No__
- Spills are immediately contained and cleaned up by trained employees? Yes__ No__
- Exposure incidents are immediately reported? Yes__ No__
- A biosafety manual is prepared or adopted? Yes__ No__
  - Employees read and follow policies? Yes__ No__
  - The manual is updated annually? Yes__ No__
  - The manual is reviewed periodically? Yes__ No__

3. Are the certified BSCs (classes I, II, or III) that are used for containment of aerosols, spills, and splashes of infectious materials:

- Certified annually? Yes__ No__
- Certified when installed? Yes__ No__
- Certified when repaired? Yes__ No__
- Certified when moved? Yes__ No__

4. Alternatively, are other physical containment devices used (e.g., special protective clothing, respirators, centrifuge safety cups, etc.)? Yes__ No__

5. Is there a readily accessible handwashing facility in the work area? Yes__ No__

6. Is there a readily accessible eyewash facility in the work area? Yes__ No__

7. Is there an autoclave for decontaminating regulated waste? Yes__ No__

8. Do employees receive additional training as described in the standard, paragraph (g)(2)(ix)? Yes__ No__

HIV and HBV Production Facilities Checklist

1. Are employees using standard microbiological practices? Yes__ No__

2. Are these special practices followed:

   - Appropriate warning signs posted at the entrance(s)? Yes__ No__
   - Access limited to authorized persons? Yes__ No__
   - Lab doors remain closed while work is in progress? Yes__ No__
   - Contaminated materials are properly and adequately packaged for removal from work area to decontamination site? Yes__ No__
   - All work areas are properly identified and labeled to warn of biohazards? Yes__ No__
   - Appropriate PPE is provided and maintained at no cost to employees? Yes__ No__
   - PPE is used and is worn properly by all employees (smocks, gowns, gloves, lab coats, uniforms, etc.)? Yes__ No__
   - PPE is decontaminated before laundering? Yes__ No__
   - PPE is not worn outside the containment module? Yes__ No__
   - All activities involving infectious agents are carried out in BSCs within the containment module? Yes__ No__
   - All waste is effectively decontaminated by incineration, autoclaving, or equivalent before removal from work areas or animal rooms? Yes__ No__
   - Vacuum lines are protected with liquid disinfectant traps and HEPA filters, or equivalent? Yes__ No__
     - These traps and filters are routinely checked and maintained? Yes__ No__

- Needles and syringes are placed in puncture-resistant containers promptly after use? Yes__ No__
  - These containers (and contents) are decontaminated before reuse or disposal? Yes__ No__
  - Absolutely no manipulation of needles and syringes takes place? Yes__ No__
  - No needles are resheathed? Yes__ No__
- Spills are immediately contained and cleaned up by trained employees? Yes__ No__
- Exposure incidents are immediately reported? Yes__ No__
- A biosafety manual is prepared or adopted? Yes__ No__
  - Employees read and follow policies? Yes__ No__
  - The manual is updated annually? Yes__ No__
  - The manual is reviewed periodically? Yes__ No__

3. Are the certified BSCs (classes I, II, or III) that are used for containment of aerosols, spills, and splashes of infectious materials:

- Certified annually? Yes__ No__
- Certified when installed? Yes__ No__
- Certified when repaired? Yes__ No__
- Certified when moved? Yes__ No__

4. Alternatively, are other physical containment devices used (e.g., special protective clothing, respirators, centrifuge safety cups, etc.)? Yes__ No__

5. Are work areas physically separated from corridors, passing through two sets of doors? Yes__ No__

6. Are door, wall, floor, and ceiling surfaces in work areas water-resistant for easy cleaning? Yes__ No__

- Are all penetrations in these surfaces sealed? Yes__ No__

7. Is there a readily accessible eyewashing facility in the work area? Yes__ No__

8. Is there a readily accessible handwashing facility in the work area? Yes__ No__

- Is the sink operated by foot, elbow, or automatically? Yes__ No__

- Is the sink located near the exit door of the work area? Yes__ No__

9. Are the doors to the containment module self-closing? Yes__ No__

10. Is an autoclave located within or as near as possible to the work area? Yes__ No__

11. Is a ducted exhaust-air ventilation system installed? Yes__ No__

12. Do employees receive additional training as described in the standard, paragraph (g)(2)(ix)? Yes__ No__

Hepatitis B Vaccination and Post-Exposure Evaluation and Follow-up Checklist

1. Have you determined which employees have occupational exposure and are eligible for the hepatitis B vaccination? Yes__ No__

2. Do you provide the hepatitis B vaccine to all employees with occupational exposure:

- Free of charge? Yes__ No__
- At a convenient time and place? Yes__ No__
- In accordance with USPHS recommendations? Yes__ No__
- After the training about the vaccine? Yes__ No__

3. Have you established a mechanism to offer the vaccine to:

- Current employees? Yes__ No__
- New employees within 10 days of their initial assignment? Yes__ No__

4. Do you provide specific training prior to vaccination that includes the:

- Hepatitis B vaccine? Yes__ No__
- Safety, efficacy, and methods of administration? Yes__ No__
- Benefits of vaccination? Yes__ No__
- Right to decline vaccination but still available upon request at a later date? Yes__ No__

5. Do employees who decline vaccination sign a declination statement? Yes__ No__

6a. Have you established a mechanism to obtain a written opinion from the evaluating LHCP on the vaccination status of each employee? Yes__ No__

6b. Is a copy of this written opinion provided to the employee? Yes__ No__

7. Are all other employee health records containing medical findings and diagnoses kept confidential? Yes__ No__

8. Are records maintained of the vaccination status of all employees who have occupational exposure? Yes__ No__

9. Have you defined exposure incidents? Yes__ No__

10. Have you established a mechanism to:

- Document the routes of exposure and circumstances under which all exposure incidents occur? Yes__ No__
- Evaluate exposure incidents that allow corrective action? Yes__ No__

11a. Do you provide a confidential medical evaluation and follow-up immediately following an exposure incident? Yes__ No__

11b. Does it include:

- Evaluation of the exposure incident? Yes__ No__
- Collecting and testing the source individual's blood for HBV and HIV serological status, if not already known? Yes__ No__
- Collecting and testing the employee's blood for HBV and HIV status? Yes__ No__
- Post-exposure prophylaxis, when medically indicated, as recommended by the USPHS at the time of exposure? Yes__ No__
- Counseling? Yes__ No__
- Evaluation of any reported illnesses related to the exposure incident? Yes__ No__

12. Do you provide the employee with information on the results of the source individual's blood testing? Yes__ No__

13. Are there procedures that specify what to do if consent is not obtainable from the source individual? Yes__ No__

14a. Are baseline blood samples from exposed employees who initially decline HIV testing held for 90 days? Yes__ No__

14b. Do you have a policy that provides for testing these samples at the employee's request (within 90 days)? Yes__ No__

15. Do you provide the evaluating LHCP with:

- A copy of the standard? Yes__ No__
- A description of the exposed employee's duties as they relate to the exposure incident? Yes__ No__
- Documentation of the route(s) of exposure and circumstances under which the exposure occurred? Yes__ No__
- Results of the source individual's blood testing, if available? Yes__ No__
- All medical records relevant to treatment of the employee including vaccination status? Yes__ No__

16a. Are you provided with a copy of the evaluating LHCP's written opinion? Yes__ No__

16b. Does it state that the employee was informed about:

- The results of the medical evaluation? Yes__ No__
- Any medical conditions that may arise from exposure that may require further treatment? Yes__ No__

17a. Do you record needlestick injuries and other exposure incidents that result in medical treatment or seroconversion on the OSHA 200 Log and Summary of Occupational Injuries or Illnesses? Yes__ No__

17b. Do you remove identifying information related to the BBP prior to granting access to the records? Yes__ No__

18. Does employee training include:

- Information on the actions taken following an exposure incident? Yes__ No__
- The reporting method? Yes__ No__
- The availability of medical follow-up? Yes__ No__

Communication of Hazards to Employees Checklist

1. Is the universal biohazard symbol always used in conjunction with the word "Biohazard"? Yes__ No__

2. Do you have written procedures that outline the specific labeling required for:

- Specimens if universal precautions are not observed for handling all specimens? Yes__ No__
- Laundry bags if universal precautions are not observed for handling all laundry? Yes__ No__
- Refrigerators and freezers that contain blood or OPIM? Yes__ No__
- Containers used to store, transport, or ship regulated waste, blood, or OPIM? Yes__ No__
- Sharps disposal containers? Yes__ No__
- Contaminated equipment that is sent for servicing or repair? Yes__ No__

3. Is training provided to all current employees? Yes__ No__

4. Is training provided to all new employees at the time of their initial employment? Yes__ No__

5. Are all employees with occupational exposure provided training:

- Free of charge? Yes__ No__
- During work hours? Yes__ No__
- At a reasonable location? Yes__ No__
- By an individual who is knowledgeable in the subject matter? Yes__ No__

6. Does the training include:

- An accessible copy of the regulatory text of the standard? Yes__ No__
- A general explanation of the epidemiology and symptoms of BBP? Yes__ No__
- An explanation of your ECP and the means by which an employee can obtain a copy of the written plan? Yes__ No
- An explanation of the appropriate methods for recognizing tasks and other activities that may involve exposure to blood and OPIM? Yes__ No__
- An explanation of the use and limitations of methods that will prevent or reduce exposure including appropriate engineering controls, work practices, and PPE? Yes__ No__
- Information on the types, proper use, location, removal, handling, decontamination, and disposal of PPE? Yes__ No__
- An explanation of the basis for selecting PPE? Yes__ No__
- Information on the hepatitis B vaccine, including information on its efficacy, safety, method of administration, benefits of vaccination, and an explanation that the vaccine and vaccination are free of charge? Yes__ No__
- Information on the appropriate actions to take and persons to contact during an emergency involving blood or OPIM? Yes__ No__
- An explanation of the procedure to follow if an exposure incident occurs, including the method of reporting the incident and the medical follow-up that is available? Yes__ No__
- Information on the post-exposure evaluation and follow-up the employer is required to provide for the employee following an exposure incident? Yes__ No__

- An explanation of signs, labels, and/or color coding used to identify hazards? Yes__ No__

- An opportunity for interactive questions and answers with the trainer? Yes__ No__

7. Is the training appropriate in content, language, and vocabulary to employees' educational, literacy, and language background? Yes__ No__

Recordkeeping Checklist

1. Have you established a mechanism for creating and maintaining confidential medical records for each employee with occupational exposure? Yes__ No__

2. Do the medical records include:

- An evaluation of the indications and contraindications for the hepatitis B vaccination? Yes__ No__
- A medical evaluation of exposure incidents? Yes__ No__
- Results of employee HIV and HBV serologic testing? Yes__ No__
- Counseling information? Yes__ No__
- Post-exposure prophylaxis? Yes__ No__
- An evaluation of any reported illness related to exposure incidents? Yes__ No__

3. Do the employer records for each employee with occupational exposure contain:

- The employee's name and Social Security number? Yes__ No__
- Indications for the hepatitis B vaccination and the date of vaccination, if received? Yes__ No__
- Signed declination statements? Yes__ No__
- Routes and circumstances of all exposure incidents? Yes__ No__
- Results of source individual's blood testing, if available? Yes__ No__
- Documentation showing the employee was informed of the evaluation of post-exposure medical evaluation results and the need for follow-up? Yes__ No__

4. Do you keep the employee's personnel records separate from the confidential medical records? Yes__ No__

5. Do employees have access to their medical records? Yes__ No__

6. Is training documented? Yes__ No__

7. Do training records include:

- Training session dates? Yes__ No__
- Contents or a summary of the training session? Yes__ No__
- Names and qualifications of the trainer(s)? Yes__ No__
- Names and job titles of all training attendees? Yes__ No__

8. Are training records retained for 3 years from the training date? Yes__ No__

9. Are the records accessible to employees? Yes__ No__

10. Are the records available to the Assistant Secretary and the Director? Yes__ No__

Local Reproduction is
Authorized and Encouraged

OCTOBER 1992

USAEHA TG No. 190