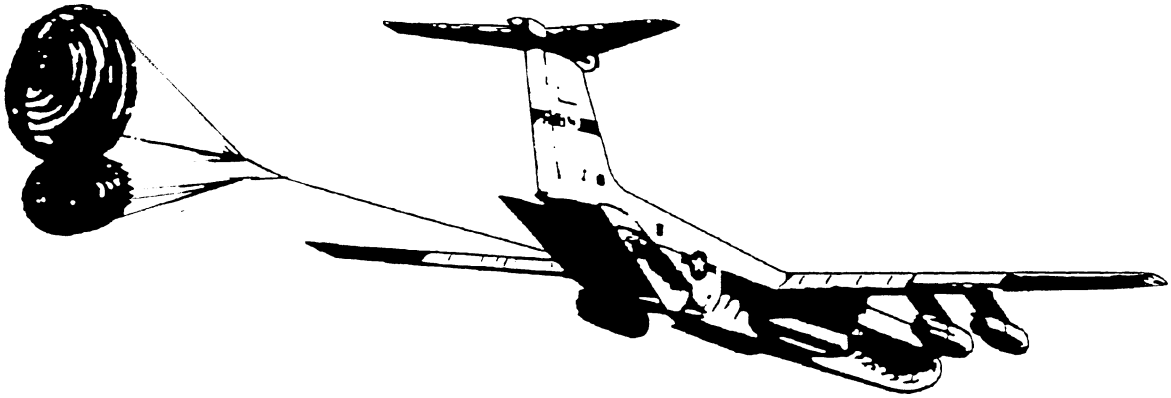

AIRDROP OF SUPPLIES AND EQUIPMENT:

RIGGING STINGER WEAPON SYSTEMS AND MISSILES

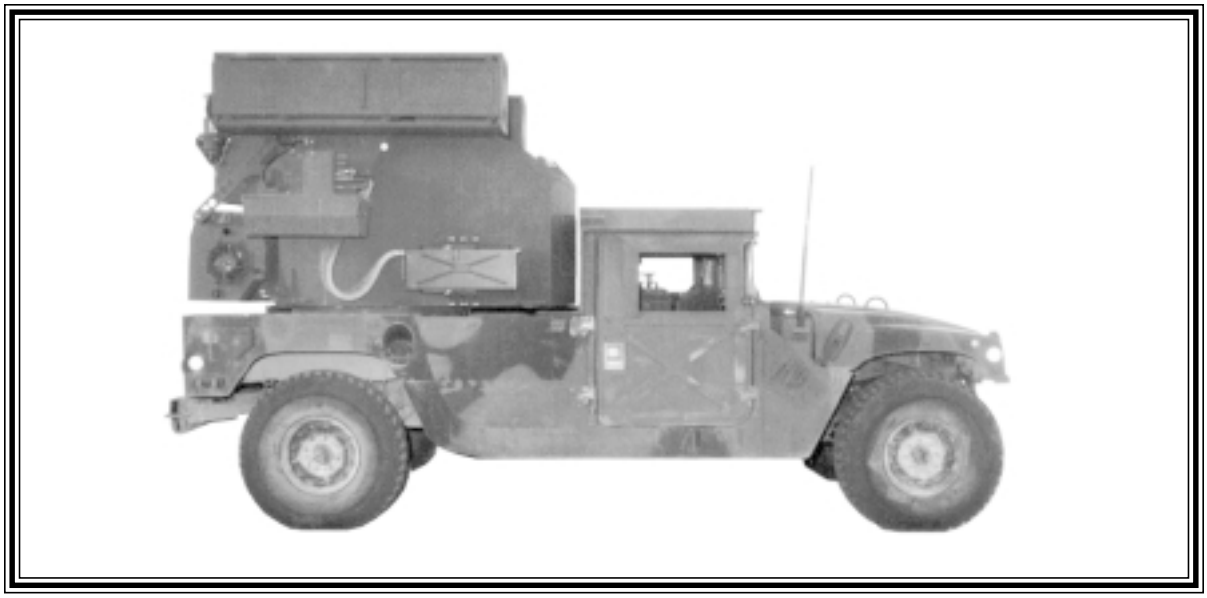

DISTRIBUTION RESTRICTION: Approved for public release; distribution is unlimited.

HEADQUARTERS
DEPARTMENT OF THE ARMY
DEPARTMENT OF THE AIR FORCE

FIELD MANUAL
No. 10-550
TECHNICAL ORDER
No. 13C7-22-71

HEADQUARTERS
DEPARTMENT OF THE ARMY
DEPARTMENT OF THE AIR FORCE
WASHINGTON, DC, 29 May 1984

AIRDROP OF SUPPLIES AND EQUIPMENT: RIGGING STINGER WEAPON SYSTEMS AND MISSILES

TABLE OF CONTENTS

		Paragraph	Page
PREFACE			v
CHAPTER 1	**INTRODUCTION**		
	Description of Items	1-1	1-1
	Special Considerations	1-2	1-1
CHAPTER 2	**RIGGING STINGER WEAPON SYSTEMS AND MISSILES**		
Section I	RIGGING 1/4-TON TRUCK AND TRAILER WITH WEAPON SYSTEMS AND MISSILES FOR LOW-VELOCITY AIRDROP		
	Description of Load	2-1	2-1
	Preparing Platform and Installing Suspension Slings	2-2	2-1
	Constructing, Positioning, and Lashing Strongbacks	2-3	2-1
	Building and Placing Honeycomb Stacks	2-4	2-4
	Stowing Accompanying Load on Platform	2-5	2-5
	Preparing Load	2-6	2-6
	Setting Truck and Trailer on Platform	2-7	2-18
	Lashing Load	2-8	2-18
	Installing Load Cover	2-9	2-20
	Installing Antitumble Slings and Safety Suspension Slings	2-10	2-20
	Stowing Cargo Parachutes	2-11	2-24
	Installing Extraction System	2-12	2-24
	Installing Release Assembly	2-13	2-28
	Placing Extraction Parachute	2-14	2-28
	Marking Rigged Load	2-15	2-29
	Equipment Required	2-16	2-30
Section II	RIGGING 1/4-TON TRUCK AND TRAILER WITH WEAPON SYSTEMS AND MISSILES FOR LAPE AIRDROP		
	Description of Load	2-17	2-32
	Preparing Platform and Installing Bridle Plates	2-18	2-32
	Stowing Accompanying Load on Platform	2-19	2-32
	Building and Placing Honeycomb Stacks	2-20	2-35
	Preparing Load	2-21	2-38

DISTRIBUTION RESTRICTION: Approved for public release; distribution is unlimited.

		Paragraph	Page
	Setting Truck and Trailer on Platform	2-22	2-42
	Lashing Load	2-23	2-43
	Installing Attitude Control Bar	2-24	2-44
	Installing Extraction System	2-25	2-46
	Placing Extraction Parachutes	2-26	2-47
	Marking Rigged Load	2-27	2-47
	Equipment Required	2-28	2-48
CHAPTER 3	**RIGGING STINGER WEAPON SYSTEMS AND MISSILES IN AN A-22 CARGO BAG FOR LOW-VELOCITY AIRDROP**		
	Description of Load	3-1	3-1
	Preparing Skid and Honeycomb	3-2	3-1
	Positioning Weapons and Missiles	3-3	3-1
	Attaching Cargo Parachutes	3-4	3-10
	Rigged Load Data	3-5	3-10
	Equipment Required	3-6	3-11
CHAPTER 4	**RIGGING STINGER WEAPON SYSTEMS AND MISSILES IN AN A-21 CARGO BAG FOR LOW-VELOCITY AIRDROP**		
	Description of Load	4-1	4-1
	Preparing Skid and Honeycomb	4-2	4-1
	Rigging A-21 Cargo Bag	4-3	4-4
	Securing Load to Skid	4-4	4-9
	Attaching Cargo Parachute	4-5	4-9
	Rigged Load Data	4-6	4-9
	Equipment Required	4-7	4-11
CHAPTER 5	**RIGGING 1/4-TON TRUCK AND TRAILER WITH STINGER WEAPON SYSTEMS AND MISSILES ON A TYPE V PLATFORM**		
Section I	LOW-VELOCITY AIRDROP		
	Description of Load	5-1	5-1
	Preparing Platform	5-2	5-1
	Building and Placing Honeycomb Stacks	5-3	5-2
	Stowing Accompanying Load on Platform	5-4	5-6
	Preparing Truck	5-5	5-7
	Preparing Trailer	5-6	5-12
	Setting Truck and Trailer on Platform	5-7	5-19
	Lashing Truck and Trailer to Platform	5-8	5-20
	Installing Load Cover	5-9	5-22
	Installing Suspension Slings and Antitumble Slings	5-10	5-23
	Stowing Cargo Parachutes	5-11	5-25
	Installing Extraction System	5-12	5-28
	Installing Release Assembly	5-13	5-29

		Paragraph	Page
	Placing Extraction Parachute	5-14	5-30
	Installing Emergency Restraints	5-15	5-30
	Marking Rigged Load	5-16	5-30
	Equipment Required	5-17	5-32
Section II	LAPE AIRDROP		
	Description of Load	5-18	5-33
	Preparing Platform	5-19	5-34
	Stowing Accompanying Load on Platform	5-20	5-34
	Building and Placing Honeycomb Stacks	5-21	5-37
	Preparing Truck and Trailer	5-22	5-41
	Setting Truck and Trailer on Platform	5-23	5-44
	Lashing Truck and Trailer to Platform	5-24	5-46
	Installing ACB	5-25	5-48
	Installing Extraction System	5-26	5-48
	Placing Extraction Parachute	5-27	5-48
	Marking Rigged Load	5-28	5-49
	Equipment Required	5-29	5-49
CHAPTER 6	**RIGGING 1 1/4-TON TRUCK WITH STINGER WEAPON SYSTEMS AND MISSILES FOR LOW-VELOCITY AIRDROP**		
	Description of Load	6-1	6-1
	Preparing Platform, Preparing and Positioning Honeycomb Stacks, and Preparing Truck	6-2	6-1
	Rigging Weapon Systems and Truck Equipment in Truck	6-3	6-1
	Lifting, Positioning, and Lashing the Truck	6-4	6-1
	Installing and Safetying Suspension Slings	6-5	6-11
	Installing Cargo Parachutes, Extraction System, Provisions for Emergency Restraint, Cargo Parachute Release, and Cargo Extraction Parachutes	6-6	6-11
	Marking Rigged Load	6-7	6-11
	Equipment Required	6-8	6-11
CHAPTER 7	**RIGGING 1 1/4-TON TRUCK WITH AN AVENGER AIR DEFENSE WEAPON SYSTEM ON A 28-FOOT, TYPE V PLATFORM FOR LOW-VELOCITY AIRDROP**		
	Description of Load	7-1	7-1
	Preparing Platform	7-2	7-1
	Preparing and Positioning Honeycomb Stacks and Strongback	7-3	7-3
	Preparing Truck	7-4	7-8
	Preparing Turret	7-5	7-18
	Positioning Truck on Platform and Installing the Drive Off Aid	7-6	7-20
	Lashing Ramps to Platform	7-7	7-21
	Lashing Truck	7-8	7-22

	Paragraph	Page
Lashing Turret	7-10	7-31
Installing Supports for Guns, Laser Range Finder, and Environmental Control Unit	7-11	7-37
Covering Turret Canopy	7-12	7-44
Suspension Slings Installed and Safetied	7-13	7-47
Stowing Cargo Parachutes	7-14	7-51
Installing Extraction System	7-15	7-54
Installing Release System	7-16	7-55
Placing Extraction Parachute	7-17	7-56
Installing Provisions for Emergency Restraint	7-18	7-56
Marking Rigged Load	7-19	7-56
Equipment Required	7-20	7-56

GLOSSARY ..... Glossary 1

REFERENCES ..... References 1

PREFACE

SCOPE

This manual tells and shows how to prepare and rig the Stinger weapon systems and missiles in A-21 and A-22 cargo bags, and on the type II and type V platforms for low-velocity airdrop from C-5, C-130, C-141, and C-17 aircraft. It tells and shows how to rig the stinger weapon systems and missiles on LAPE and type V platforms for LAPE airdrop from C-130 aircraft. This manual tells and shows how to rig the Avenger air defense weapon system with the modified environmental control unit for low-velocity airdrop from the C-17, C-5, C-141, and C-130 aircraft. This manual is designed for use by all parachute riggers.

USER INFORMATION

The proponent of this publication is HQ TRADOC. You are encouraged to report any errors or omissions and to suggest ways to make this a better manual. Army personnel, send your comments on DA Form 2028 directly to:

Director
Aerial Delivery and Field Services Department
USA Quartermaster Center and School
1010 Shop Road
Fort Lee, Virginia 23801-1502

Air Force personnel, send your reports on AFTO Form 22 through:

Headquarters
Air Mobility Command (AMC/DOKT)
402 Scott Drive, Unit 3A1
Scott AFB, Illinois 62225-5302

Air Force personnel in Special Operations Command, send your reports on AFTO Form 22 through:

HQ AFSOC/DOXT
100 Bartley St., Suite 260
Hurlburt Field, Florida 32544-5273

to:

Director
Aerial Delivery and Field Services Department
USA Quartermaster Center and School
1010 Shop Road
Fort Lee, Virginia 23801-1502

Also send information copy of AFTO Form 22 to:

SA-AL/TILDP
485 Quentin Roosevelt Road
Kelly AFB, Texas 78241-6421

Unless this publication states otherwise, masculine nouns and pronouns do not refer exclusively to men

CHAPTER 1

INTRODUCTION

1-1. Description of Items

The description of the items covered in this manual is as follows:

a. The Stinger missile, in a wooden box, weighs 74 pounds; it is 67 inches long, 14 inches wide, and 12 inches high.

b. The Stinger weapon system, in a metal case, weighs 87 pounds; it is 66 inches long, 13 inches wide, and 13 inches high.

c. The M151, 1/4-ton truck weighs 2,410 pounds. It is 133 inches long, 64 inches wide, and 71 inches high (reducible to 52 inches).

d. The M416, 1/4-ton trailer weighs 570 pounds. It is 109 inches long, 61 inches wide, and 44 inches high.

e. The M 998, 1 1/4-ton HMMWV-series truck weighs 5,500 pounds. It is 185 inches long, 85 inches wide, and 70 inches high.

f. The M1097, 1 1/4-ton, HMMWV-series truck used in the Avenger air defense weapon system weighs between 5,750 pounds and 5,900 pounds. It is 188.5 inches long, 86 inches wide, and 72 inches high. This truck with the Avenger turret mounted is 104 inches high.

g. The Avenger weapon system turret is 69.25 inches high, when removed from the truck. It is 85 inches wide and 86.6 inches long. The Avenger turret with the modified Environmental Control Unit (ECU) is 91 inches long.

1-2. Special Considerations

CAUTION: Only ammunition listed in FM 10-500-53/ MCRP 4-3.8/TO 13C7-18-41 may be airdropped.

a. The loads covered in this manual may include hazardous materials as defined in AFJMAN 24-204/TM 38-250. If included, the hazardous material must be packaged, marked, and labeled as required by AFJMAN 24-204/TM-38-250.

b. FM 10-517/TO 13C7-1-111 must be used to rig loads that include HMMWV series trucks.

c. A copy of this manual must be available to the joint airdrop inspectors during the before- and after-loading inspections.

CHAPTER 6

RIGGING 1 1/4-TON TRUCK WITH STINGER WEAPON SYSTEMS AND MISSILES FOR LOW-VELOCITY AIRDROP

6-1. Description of Load

The M998, 1 1/4-ton truck (HMMWV), equipped with the stinger weapon system rack and loaded with six stinger weapon systems and items of truck equipment, is rigged on a 16-foot, type V platform. The load requires two G-11 parachutes, The accompanying load rigged in the truck weighs 1,180 pounds.

6-2. Preparing Platform, Preparing and Positioning Honeycomb Stacks, and Preparing Truck

Prepare the platform, prepare and position the honeycomb stacks, and prepare the truck according to FM 10-517/TO 13C7-1-111.

6-3. Rigging Weapon Systems and Truck Equipment in Truck

Secure the truck equipment to the truck as shown in Figure 6-1. Secure the weapon systems in their rack as shown in Figure 6-2. Secure the truck tailgate and install body side protection boards according to FM 10-517/TO 13C7-1-111.

6-4. Lifting, Positioning, and Lashing the Truck

Lift, position, and lash the truck to the platform according to FM 10-517/TO 13C7-1-111.

NOTES: 1. All measurements are given in inches.
2. This drawing is not to scale.

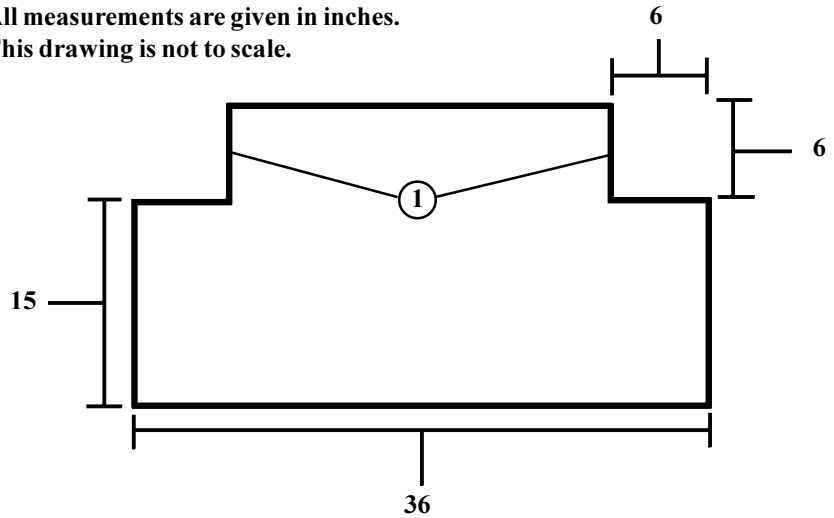

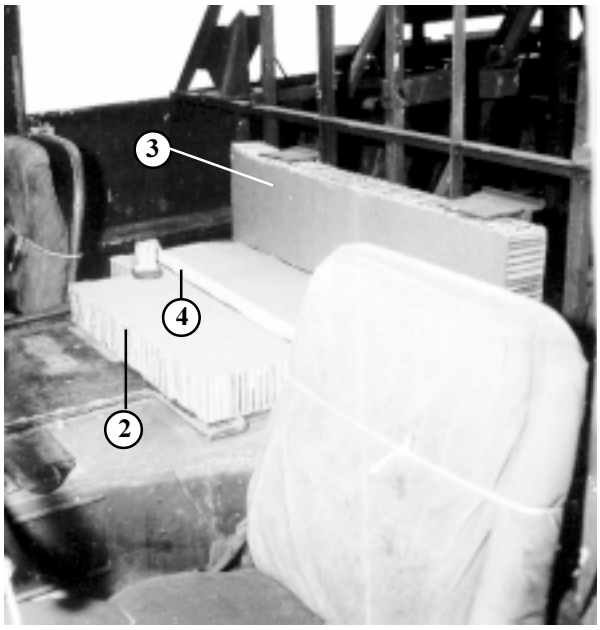

1. Make 6- by 6-inch cutouts in a 21- by 36-inch piece of honeycomb as shown.
2. Center the honeycomb behind the seats with the cutouts facing the front and the rear edge against the missile rack.
3. Place an 8- by 36-inch piece of honeycomb on top of the honeycomb placed in step 2 above and the two edges on the missile rack.
4. Place a 15-foot lashing on the honeycomb.

Figure 6-1. Truck equipment secured to truck

(16) Pass a 15-foot lashing through the front weapon system case handles and through the front side tie-down provisions. Fasten the lashing on the right with a D-ring and a load binder.

(17) Pass a 15-foot lashing across the tops of the cases and through the rear side tie-down provisions. Fasten the lashings on top of the boxes with a D-ring and load binder. Pad under the load binder with 1/2-inch felt.

(18) Pass a 15-foot lashing across the tops of the cases and through the front side tie-down provisions. Fasten the lashings on top of the boxes with a D-ring and load binder. Pad under the load binder with 1/2-inch felt.

(19) Lash the left rear tie-down ring to the right upper tie-down provision on the rack with a 15-foot lashing. Secure with D-ring and load binder.

(20) Lash the right rear tie-down ring to the left upper tie-down provision on the rack in the same way as in step 19 above.

NOTE: Position the load binders on the lashings in steps 18 and 19 above so that they will not contact the tailgate when it is closed.

Figure 6-2. Weapon system secured to rack (continued)

6-5. Installing and Safetying Suspension Slings

Install and safety the suspension slings according to FM 10-517/TO 13C7-1-111.

6-6. Installing Cargo Parachutes, Extraction System, Provisions for Emergency Restraints, Cargo Parachute Release, and Cargo Extraction Parachutes

Finish rigging the load according to FM 10-517/TO 13C7-1-111, Chapter 2 and FM 10-500-2/TO 13C7-1-5.

6-7. Marking Rigged Load

Mark the rigged load according to FM 10-500-2/TO 13C7-1-5 and as shown in Figure 6-3.

6-8. Equipment Required

Use the equipment listed in Table 6-1 to rig six stinger weapon systems in a 1 1/4-ton HMMWV truck. Equipment for rigging the truck is listed in FM 10-517/TO 13C7-1-111, Table 2-2.

CAUTION
Make the final rigger inspection required by FM 10-500-2/TO 13C7-1-5 before the load leaves the rigging site.

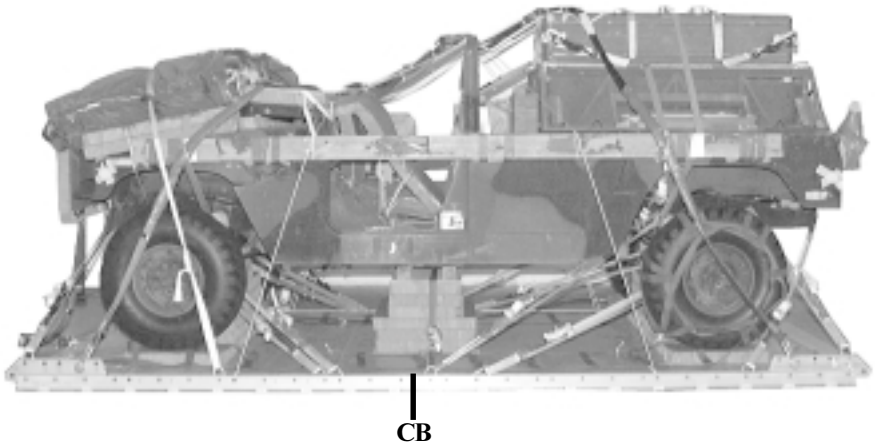

RIGGED LOAD DATA

Weight.....8,830 pounds

Maximum Weight.....10,500 pounds

Height.....92 inches

Width.....108 inches

Overall Length.....210 inches

Overhang: Front.....0 inches
Rear (EFTC).....18 inches

Center of Balance (CB).....95 inches

Extraction System.....EFTC

Figure 6-3. M998, 1 1/4-ton truck with six stinger weapon systems rigged for low-velocity airdrop

CHAPTER 7

RIGGING 1 1/4-TON TRUCK WITH AN AVENGER WEAPON SYSTEM ON A 28-FOOT, TYPE V PLATFORM FOR LOW-VELOCITY AIRDROP

7-1. Description of Load

The Avenger is a turret-configured weapon system mounted on a modified M1097 1 1/4-HMMWV-series truck. There are two configurations of the system, the Avenger without the Environmental Control Unit (ECU) mounted on a modified M1097-series truck and the Avenger with an upgraded ECU mounted on a modified M1097-series truck. The Avenger is shown in Figure 7-1 in the travel position. The weapons consist of two missile pods, a 50-caliber machine gun, and guidance system. The turret is removed from the truck and rigged on a 28-foot type V platform with the truck.

This load requires three G-11 parachutes.

7-2. Preparing Platform

Prepare a 28-foot, type V airdrop platform as shown in Figure 7-2.

NOTES:
1. The nose bumper may or may not be installed.
2. Measurements given in this load are from the front edge of the platform, NOT from the front edge of the nose bumper.

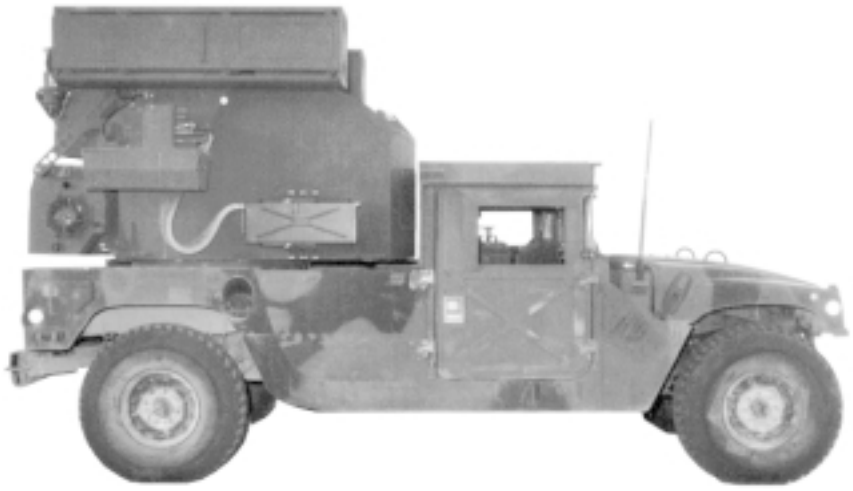

Figure 7-1. Avenger air defense weapon system with ECU on M1097 truck

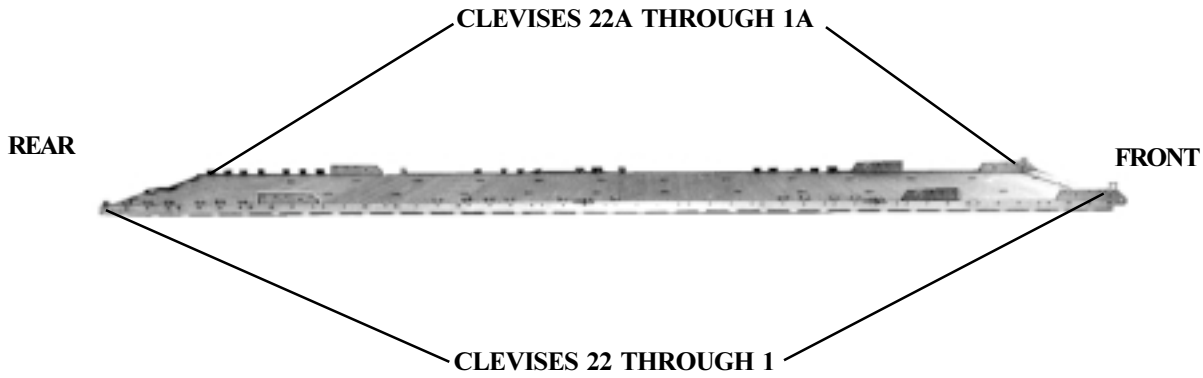

Step:

1. Inspect, or assemble and inspect, a 28-foot, type V airdrop platform as outlined in TM 10-1670-268-20&P/TO 13C7-52-22.

2. Install a suspension link to the right and left platform side rails using holes 10, 11, and 12.

3. Install a tandem link to the front of each platform side rail using holes 1, 2, and 3.

4. Install a suspension link to the right and left platform side rails using holes 45, 46, and 47.

5. Install a clevis on bushing 1 of each tandem link.

6. Starting at the front of each platform side rail, install clevises on the bushings bolted to holes 14 (triple clevis), 15, 16, 18, 19, 28, 30 (triple clevis), 31, 34, 35, 36, 38, 49, 50, 51, 53, 54, 55, and 56.

7. Starting at the front of the platform, number the clevises 1 through 22 on the right side, and 1A through 22A on the left side.

8. Label the tie-down rings according to FM 10-500-2/TO 13C7-1-5.

Figure 7-2. Platform prepared

7-3. Preparing and Positioning Honeycomb Stacks and Strongback

Prepare honeycomb stacks 1, 2, and 3 for the truck as shown in Figures 2-3 and 2-4, FM 10-517/TO 13C7-1-111. Prepare honeycomb stacks 4 and 5 for the turret as shown in Figure 7-3. Position the honeycomb stacks as shown in Figure 7-4. Construct the strongback as shown in Figure 7-5. Position the strongback on the honeycomb stacks and install the drive off aid on the platform as shown in Figure 7-6.

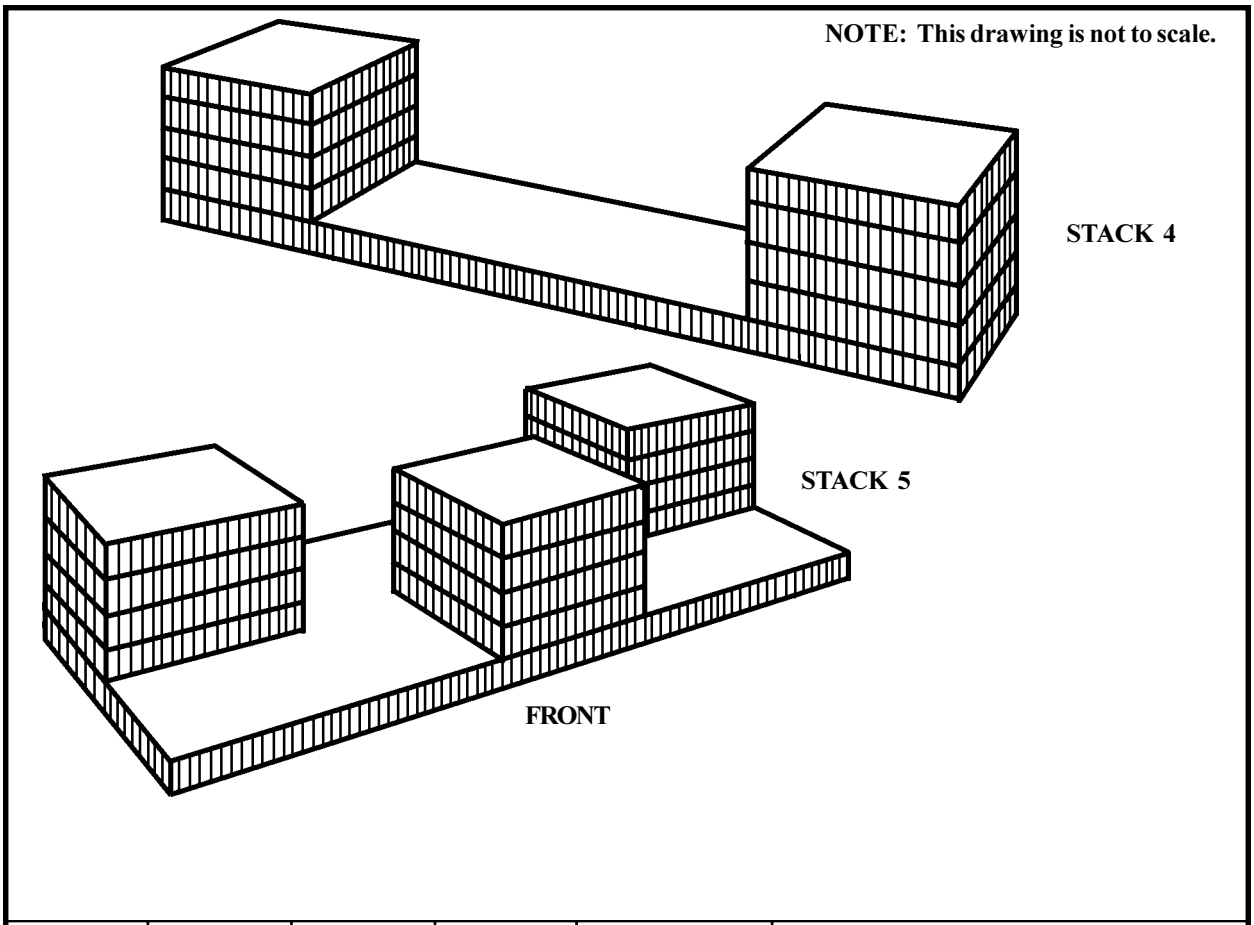

Stack Number	Pieces	Width (Inches)	Length (Inches)	Material	Instructions
4	1	72	16	Honeycomb	This is the base.
	8	16	16	Honeycomb	Glue four pieces flush with each end of the base.
5	1	72	36	Honeycomb	This is the base.
	4	16	16	Honeycomb	Center and glue flush with the front edge of the base
	8	18	18	Honeycomb	Glue four pieces flush with each rear corner of the base.

Figure 7-3. Stacks 4 and 5 prepared

NOTES: 1. All measurements are given in inches.
2. This drawing is not to scale.

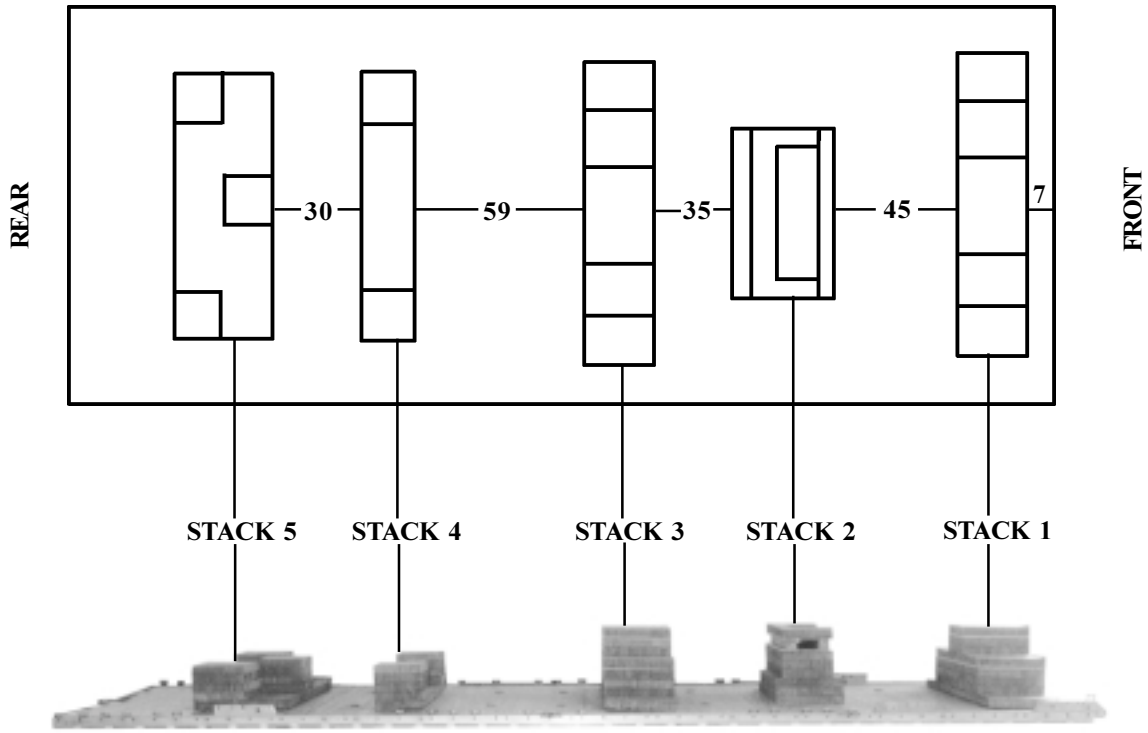

Stack Number	Position of Stack on Platform
	Place stack:
1	Centered 7 inches from the front of the platform.
2	Centered 45 inches from stack 1.
3	Centered 35 inches from stack 2.
4	Centered 59 inches from stack 3.
5	Centered 30 inches from stack 4.

Figure 7-4. Honeycomb stacks positioned on platform

NOTES: 1. All measurements are given in inches.
2. This drawing is not to scale.

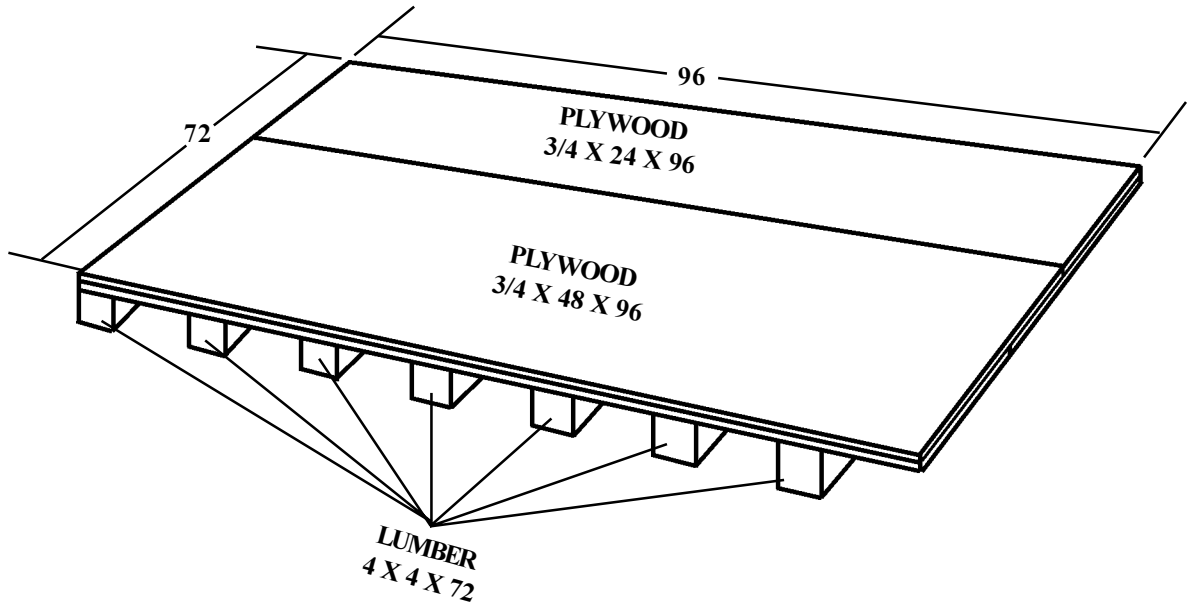

Strongback	Pieces	Width (Inches)	Length (Inches)	Material	Instructions
	2 2	48 24	96 96	3/4-in Plywood 3/4-in Plywood	Alternate pieces and nail plywood together forming a two layer 72-in x 96-in base.
	7	72		4-in x 4-in Lumber	Place a piece under the base flush with one end. place another under the base 12 inches from the opposite end. Space the remaining five pieces evenly between the first two pieces. Align all pieces with the outside edges of the base and nail each piece to the base through the plywood.

Figure 7-5. Strongback prepared

NOTES: 1. All measurements are given in inches.
2. This drawing is not to scale.

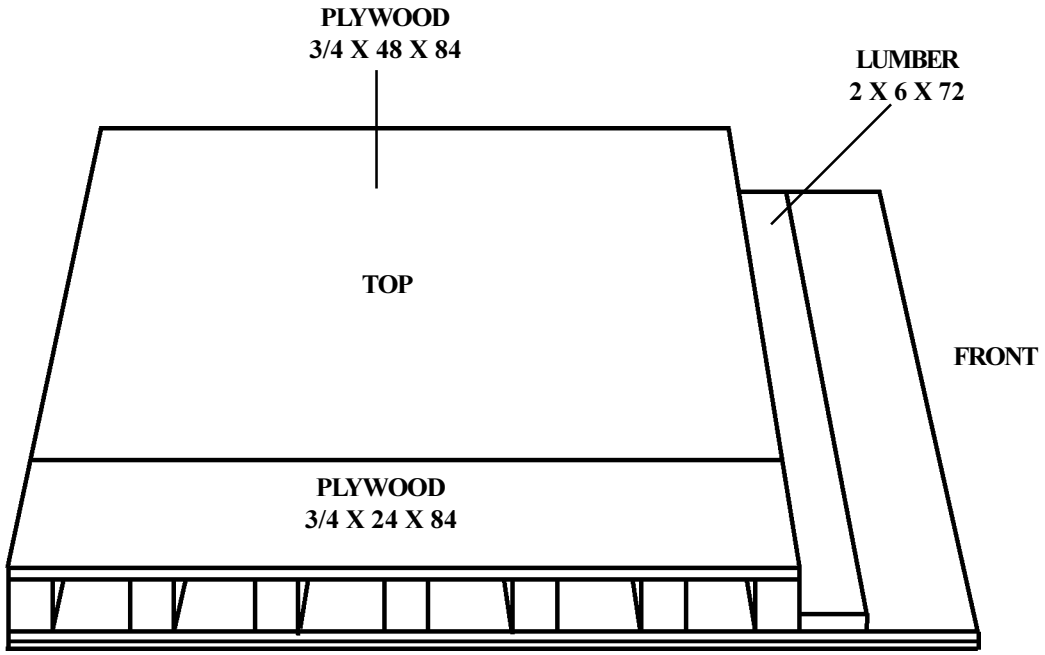

Strongback	Pieces	Width (Inches)	Length (Inches)	Material	Instructions
	1	48	84	3/4-in Plywood	Nail flush with lumber and base on left side.
	1	24	84	3/4-in Plywood	Nail flush with lumber and base on right side.
	1	72		2-in x 6-in Lumber	Nail to base flush against first piece of 4-in x 4-in lumber

Figure 7-5. Strongback prepared (continued)

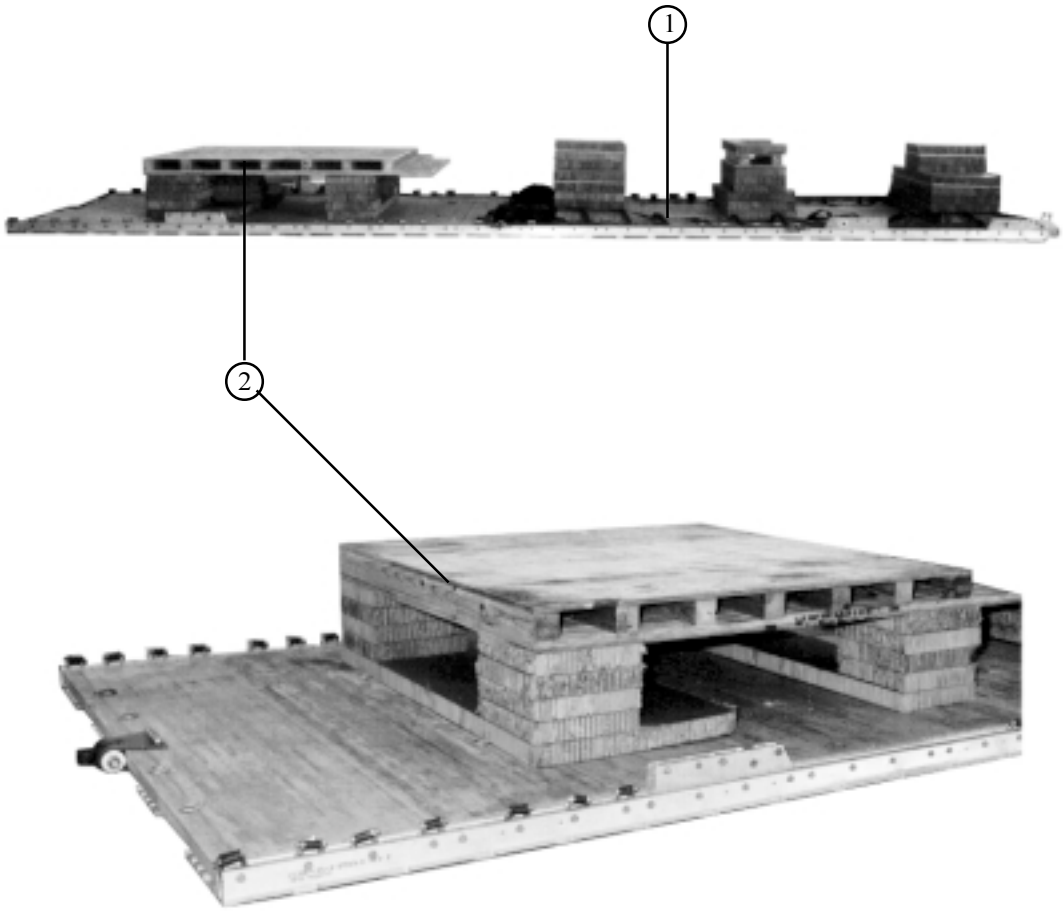

1. Install the drive off aid using tie-down rings A1 and B1 according to FM 10-500-2/TO13C7-1-5. Extend the drive off aid toward the rear of the platform over the bottom layer of honeycomb on stacks 1 and 3.

2. Set the strongback on stacks 4 and 5. Align the rear of the strongback with the rear of stack 5.

Figure 7-6. Strongback set on stacks 4 and 5 and drive off aid installed on platform

7-4. Preparing Truck

The Avenger turret must be removed from the truck before preparing the truck.

CAUTION

1. Allow only Avenger crew personnel to prepare the turret for removal.
2. Secure and account for the turret mounting bolts. Tape the bolts to the inside of the brass collection box.

Prepare the truck as outlined below:

a. Prepare the truck as described in paragraphs 2-4 a through c and paragraph 2-4d steps 2, 4, 5, 6, 7, 9, and 10, FM 10-517/TO 13C7-1-111.

b. Prepare the underside of the truck as shown in Figures 2-11 and 2-12 of FM 10-517/TO 13C7-1-111.

c. Further prepare the truck as shown in Figure 7-7.

WARNING

Remove all jewelry before working around electrical and mechanical equipment. Jewelry may conduct high voltage electricity resulting in serious injury.

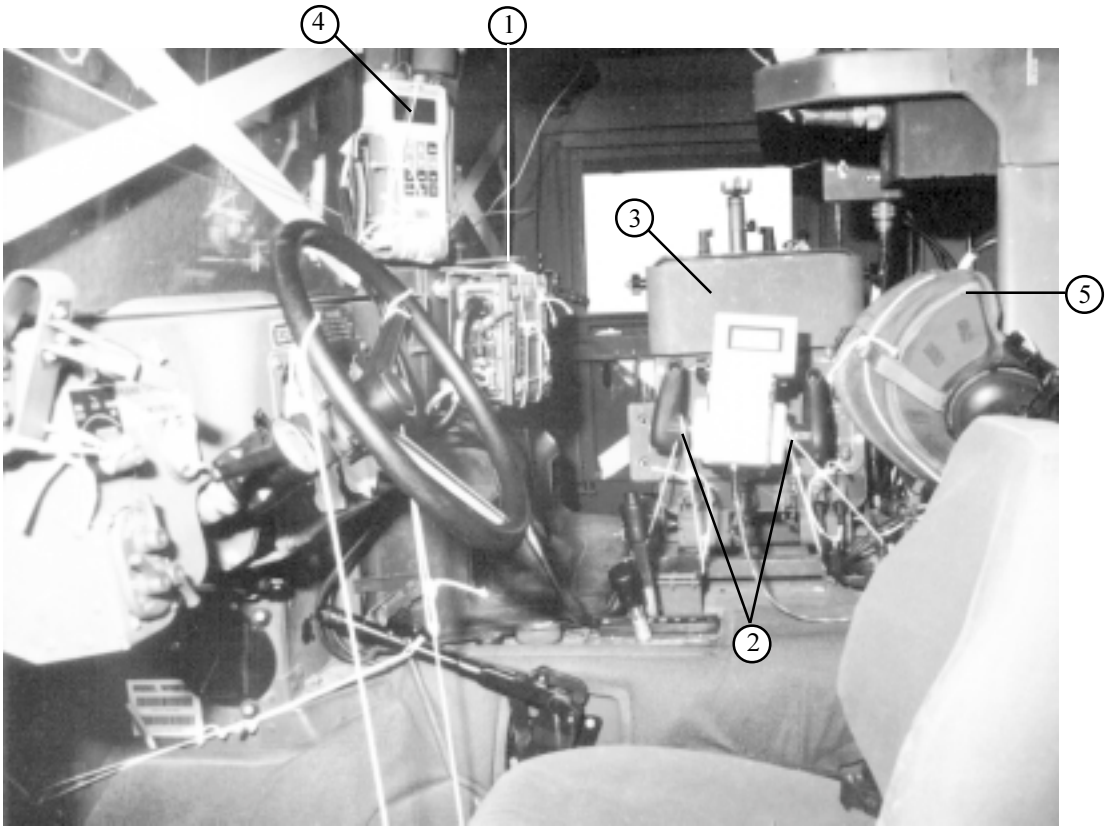

1. Lower the sunscreen on the targeting console and secure with type III nylon cord.
2. Ensure the remote control unit is secured in place with the pins provided and safety tied on each side with type III nylon cord.
3. Lower the sunscreen over the monitor.
4. Safety tie the Gobal Positioning System (GPS) in place with type III nylon cord.
5. Secure the driver's headset with type III nylon cord.
6. Secure the azimuth indicator and pointer assembly in place (if required) (not shown).
7. Safety tie the remote control cable to its bracket with type III nylon cord (if required) (not shown).

Figure 7-7. Truck prepared

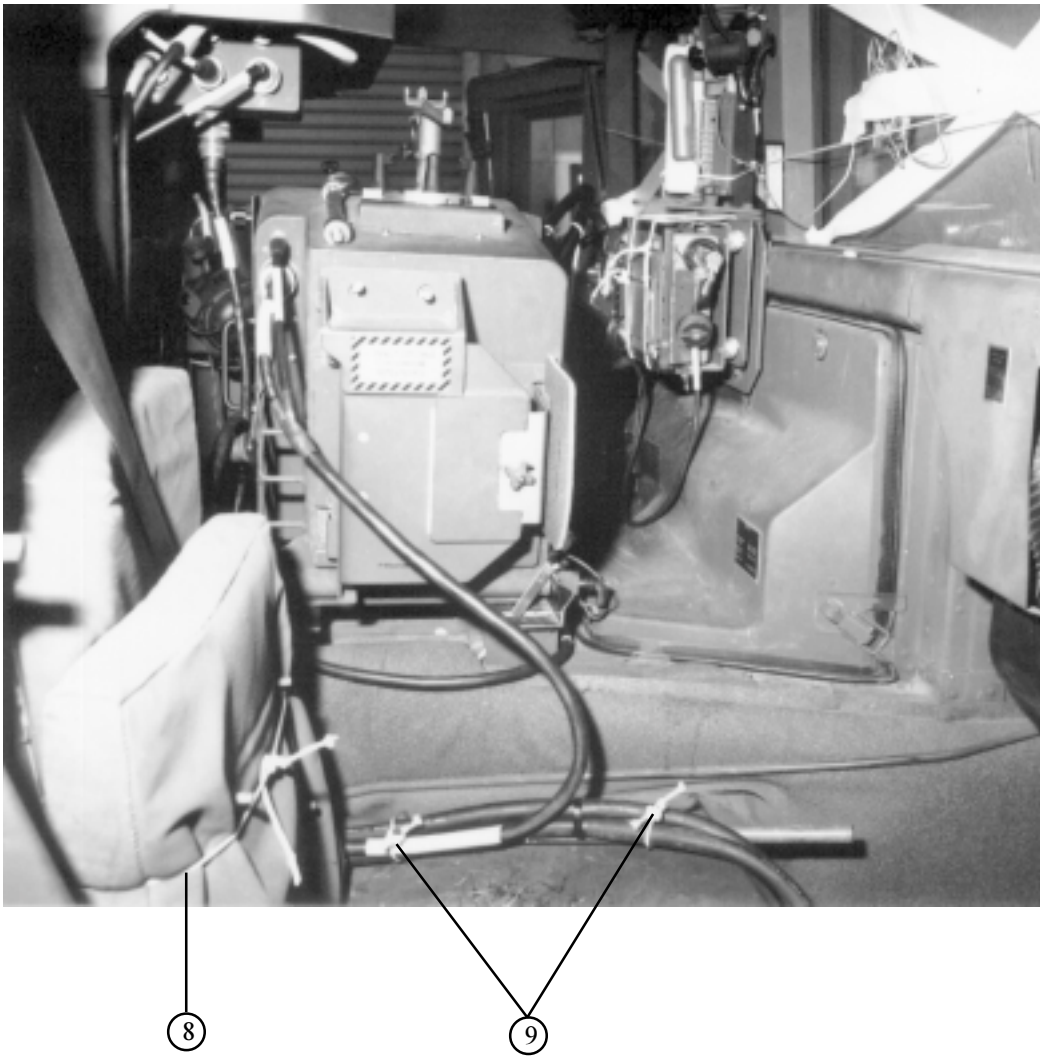

(8) Fold up the seat bottom of the passenger's seat and secure it to the back of the seat with type III nylon cord.

(9) Secure the slave cables and antennae to the passenger seat frame with type III nylon cord.

Figure 7-7. Truck prepared (continued)

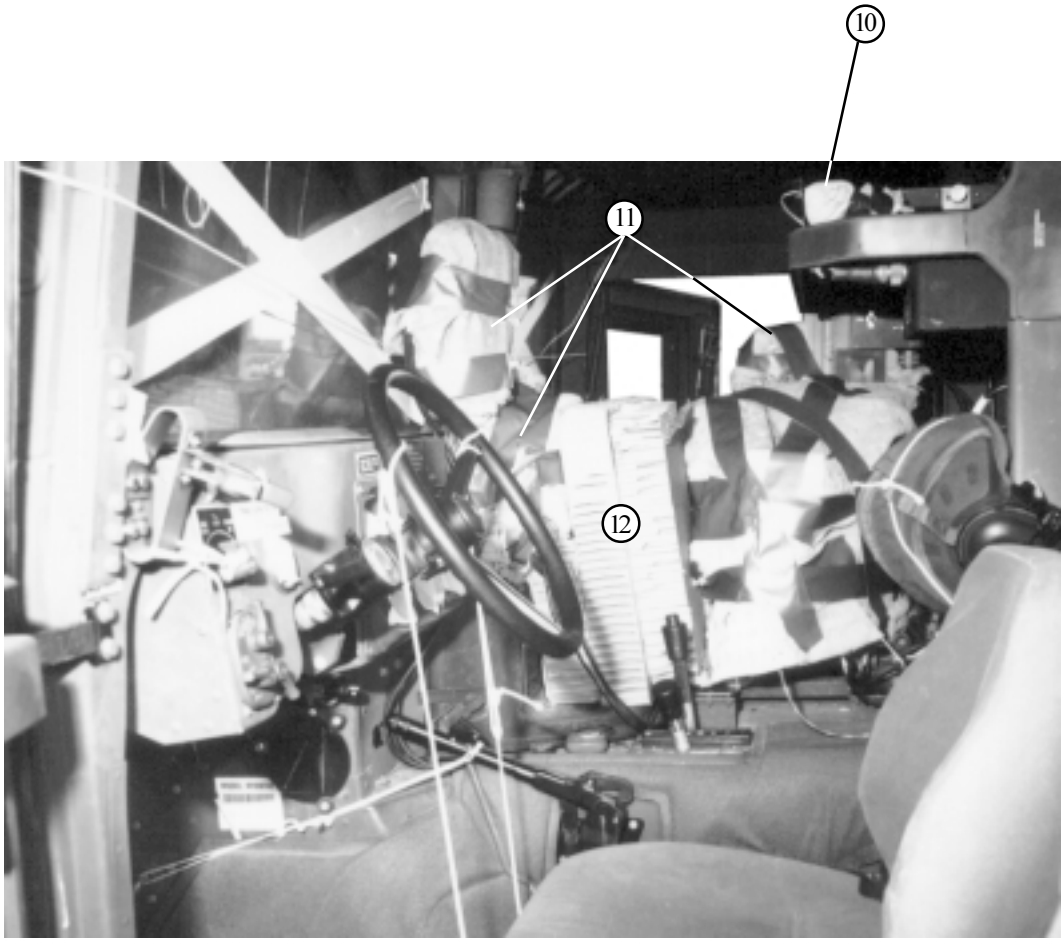

(10) Secure the top mount radio with type III nylon cord. Wrap the radio with cellulose padding and secure the cellulose padding with tape.

(11) Wrap the remote control unit, the targeting console, the GPS, and hand navigation system with cellulose padding. Secure the cellulose padding with tape.

(12) Cut to fit and place honeycomb between the monitor and the targeting console.

Figure 7-7. Truck prepared (continued)

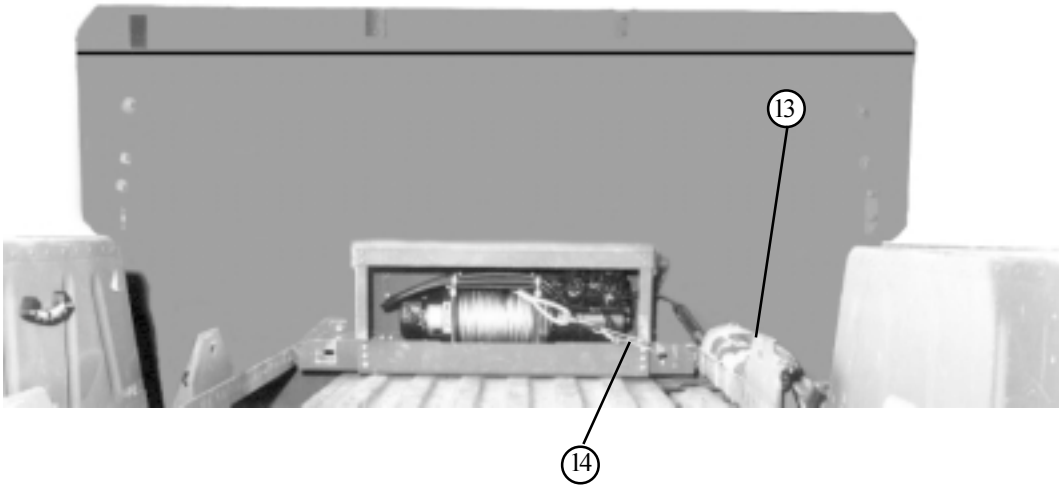

(13) Wrap the control cables in the truck bed with cellulose padding and secure the cellulose padding with tape. Tie the wrapped cables to the turret frame with type III nylon cord.

(14) Secure the winch cable to the winch frame with type III nylon cord.

Figure 7-7. Truck prepared (continued)

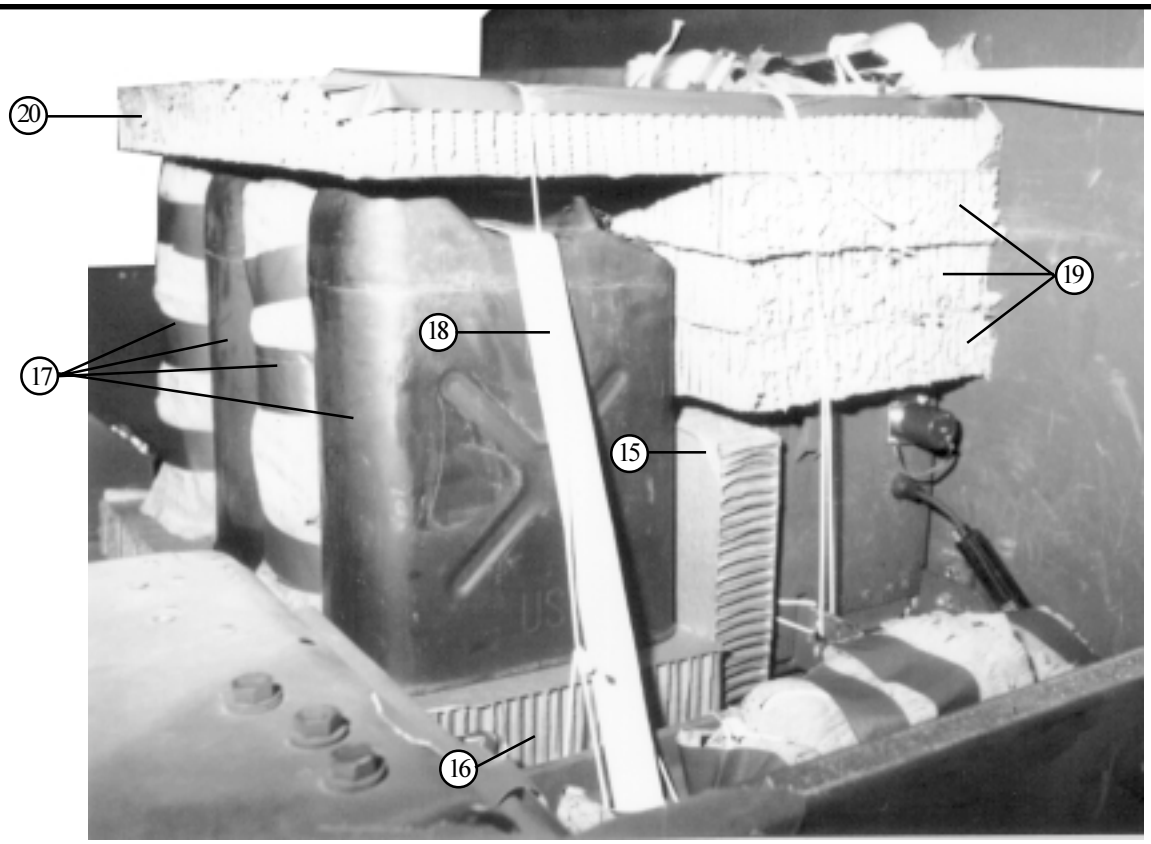

(15) Place a 28- by 12-inch piece of honeycomb on edge against the winch frame (if rigging the Avenger w/o a winch frame, place a 40- by 13-inch piece of honeycomb on edge in front of the winch and tape the honeycomb to the cargo floor).

(16) Place a 32- by 16-inch piece of honeycomb on the cargo floor in front of the honeycomb placed in step 15.

(17) Pad two fuel cans with cellulose padding and secure the padding with tape. Alternate and place two fuel cans and two water cans flush on the honeycomb.

(18) Pass a 15-foot lashing through the handles and under the rails of the turret frame on both sides. Close the load binder on one of the sides.

(19) Place three 32- by 14-inch pieces of honeycomb on top of the winch in front of the cans (use 40- by 12-inch pieces for the Avenger w/o winch frame).

(20) Place a 32- by 28-inch piece of honeycomb on top of the cans and honeycomb placed in step l9. Tape the side edges of the honeycomb. Secure the honeycomb with two lengths of type III nylon cord to the turret frame.

Note: When rigging the Avenger w/o winch frame, place a piece of honeycomb on each side of the winch.

Figure 7-7. Truck prepared (continued)

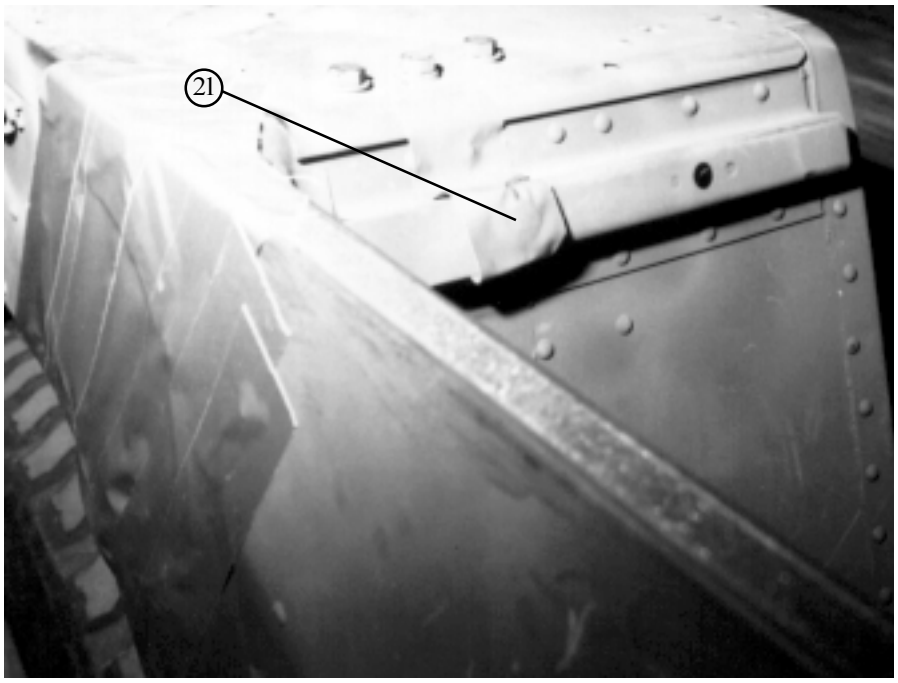

21 Secure the rear door pins with tape.

22 Place the camouflage net bag against the cans. Tie the net bag to the rails with three lengths of type III nylon cord (if required) (not shown).

23 Tape all lights and reflectors (not shown).

Figure 7-7. Truck prepared (continued)

NOTES: 1. All measurements are given in inches.
2. This drawing is not to scale.

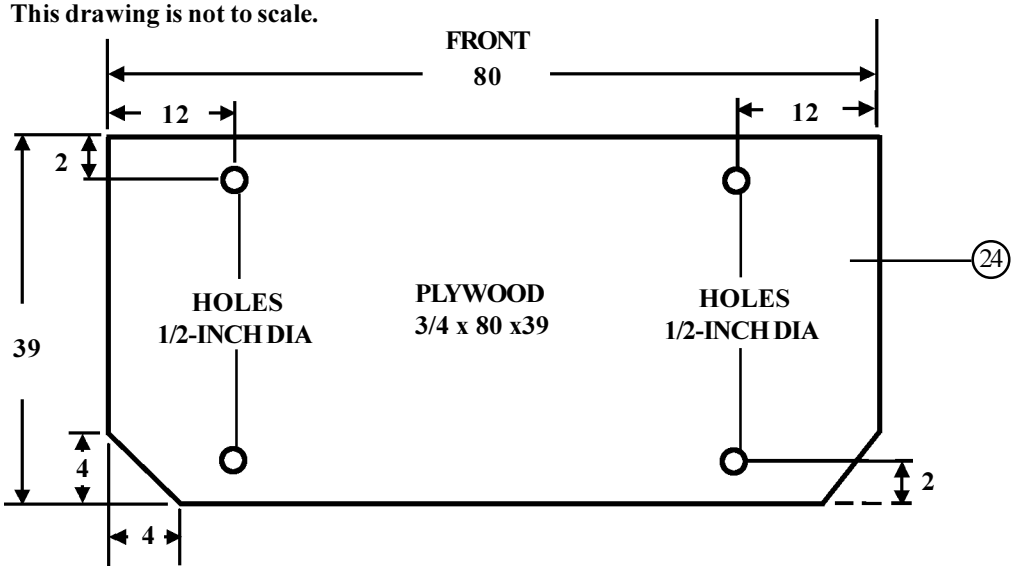

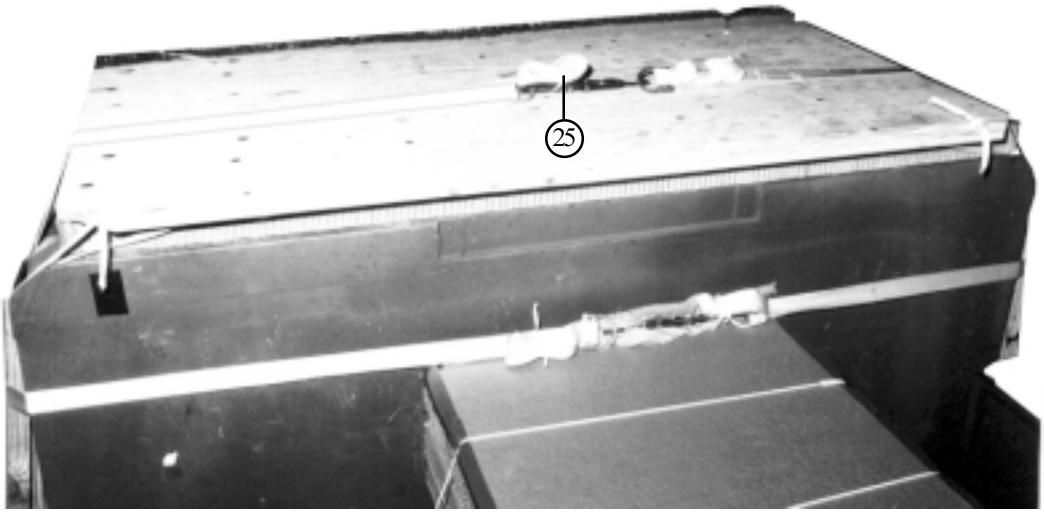

(24) Fabricate a roof protector by making cuts and 1/2-inch holes as shown in an 80- by 39-inch piece of 3/4-inch plywood. Glue an 80- by 36-inch piece of honeycomb to the plywood, flush along the front edge.

(25) Place the roof protector on the roof, honeycomb side down as shown. Route a 30-foot lashing through the open windows and under the radio mount. Close the load binder on top of the roof protector.

Figure 7-7. Truck prepared (continued)

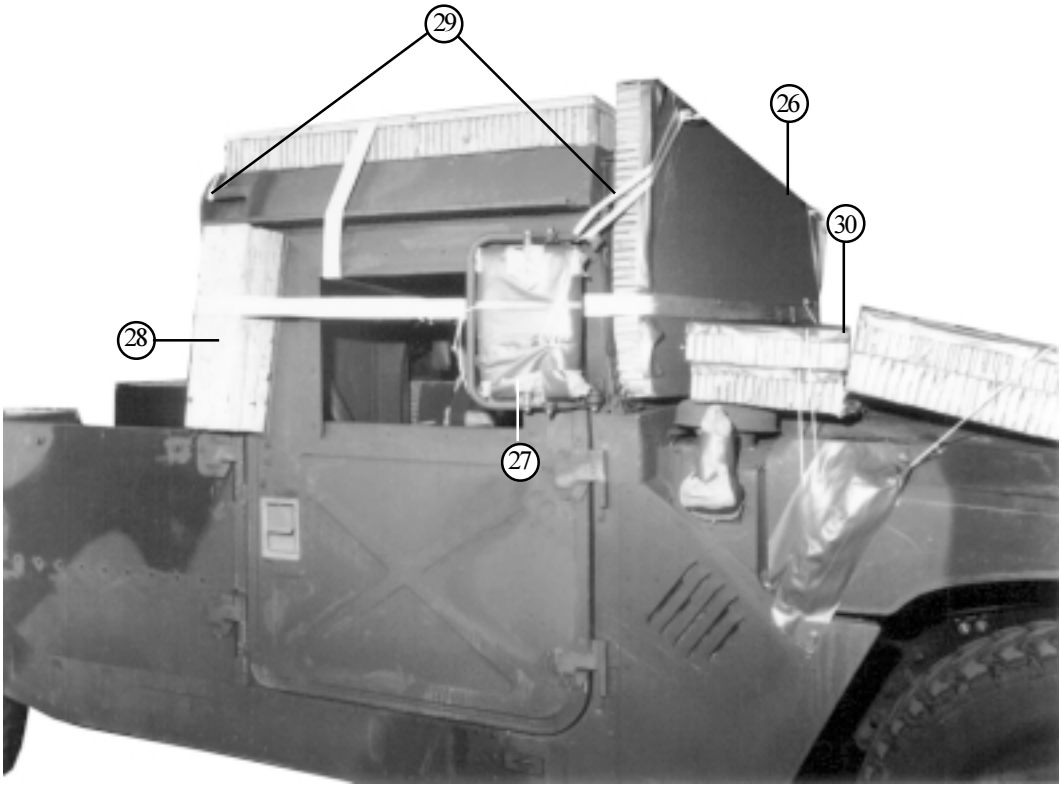

(26) Place an 83- by 23-inch piece of honeycomb against the windshield and tape the outside edges.

(27) Pad the mirrors with cellulose padding and secure the padding with tape. Fold the mirrors to the side.

(28) Make two spacers each of three pieces of 2- by 8- by 18-inch lumber and a layer of 10- by 22-inch felt. Nail the lumber together and glue the felt to one side of the spacer. Place a spacer vertically behind each door window. Route a 30-foot lashing around the windshield, through the mirror brackets, over the spacers, and close the load binder behind the cab.

(29) Tie the front of the roof protector to the mirror brackets by routing a length of 1/2-inch tubular nylon webbing through the 1/2-inch hole in the roof protector and around the mirror bracket. Tie the rear of the roof protector to the handles on the roof by routing a length of 1/2-inch tubular nylon webbing through the rear holes of the roof protector and around the roof handle.

(30) Cut two 82- by 12-inch pieces of honeycomb and tape the 12-inch edges. Tie the two pieces of honeycomb to the hood in front of the honeycomb covering the windshield with a length of type III nylon cord.

Figure 7-7. Truck prepared (continued)

NOTES: 1. All measurements are given in inches.
2. This drawing is not to scale.

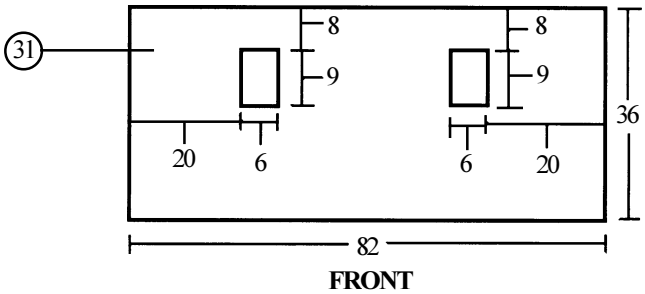

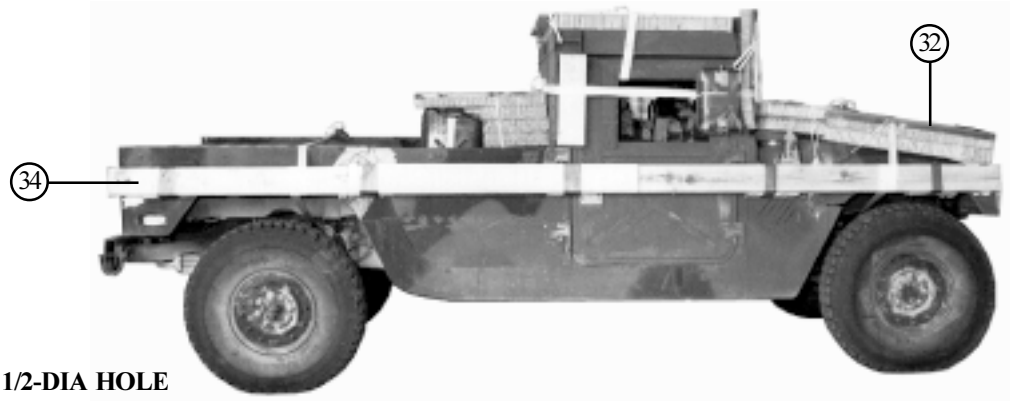

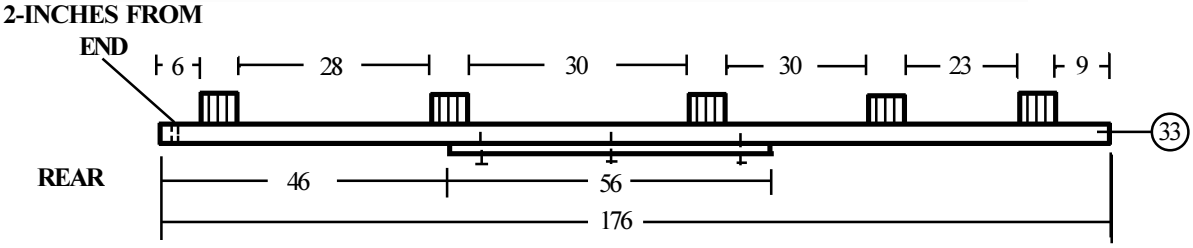

(31) Make cutouts as shown above in two 82- by 36-inch pieces of honeycomb and tape the outside edges.

(32) Tie the honeycomb over the hood with type III nylon cord. Make two ties front to rear and two ties side to side. Tape the hood latches.

(33) Fabricate two side boards by nailing a 2- by 6- by 56-inch piece of lumber flush with and 46 inches from the rear edge of a 2- by 6- by 176- inch piece of lumber. Glue five 5 1/2- by 10-inch pieces of honeycomb to the other side of the 176-inch piece, spaced as shown. Drill a 1/2-inch hole, centered and 2 inches from the rear of the board.

(34) Secure the side boards to each side of the truck as shown in Figure 2-13, FM 10-517/TO 13C7-1-111.

Figure 7-7. Truck prepared (continued)

7-5. Preparing Turret

Prepare the turret as shown in Figure 7-8.

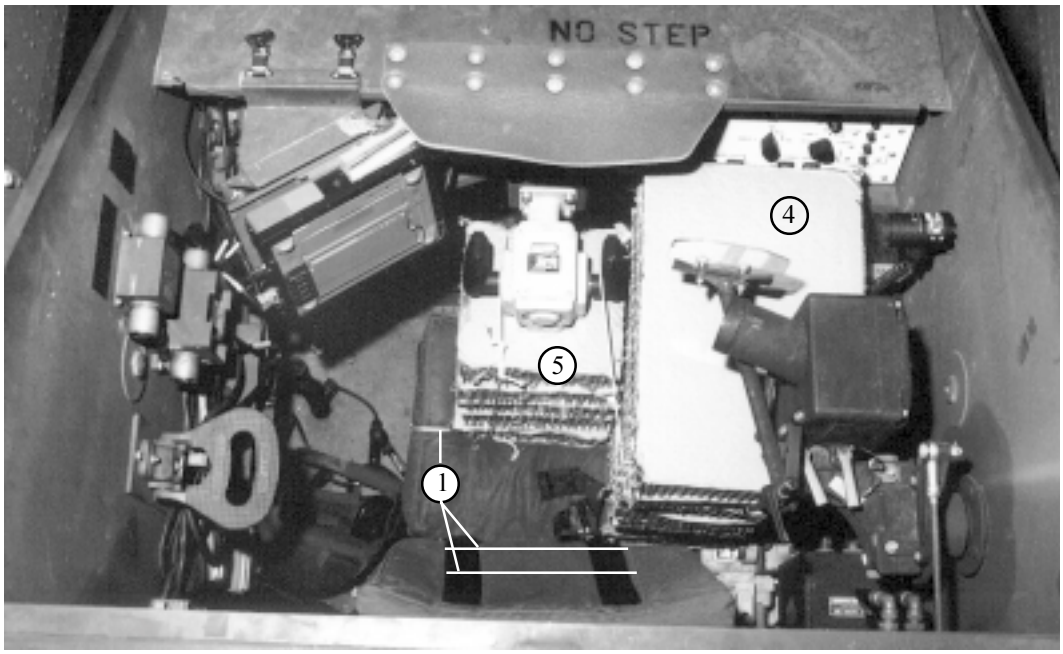

1. Tie the seat and seat back to the seat frame with type III nylon cord.

2. Remove the azimuth and elevation pins and place them in the clips provided (on older, unmodified turrets) (not shown).

3. Remove the pins from the optical sight bracket and lift the sight to the side (not shown).

4. Cut ten 12- by 18-inch pieces of honeycomb with a 4- by 4-inch cutout in one corner and glue the pieces together. Cut two 3/4- by 8- by 8-inch pieces of plywood with a 4- by 4-inch cutout in one corner. Align the cutouts and nail the plywood together. Align the cutouts and glue the plywood on top of the honeycomb. Place the honeycomb and plywood stack under the optical sight and against the control panel. Secure the optical sight in the bracket with the pins. Secure the stack with type III nylon cord (the older, unmodified turret requires eight 12- by-18-inch pieces of honeycomb with no cutouts or plywood).

5. Glue together five 10- by 10-inch pieces of honeycomb. Place the stack under the hand station and secure in place with type III nylon cord.

Figure 7-8. Turret prepared

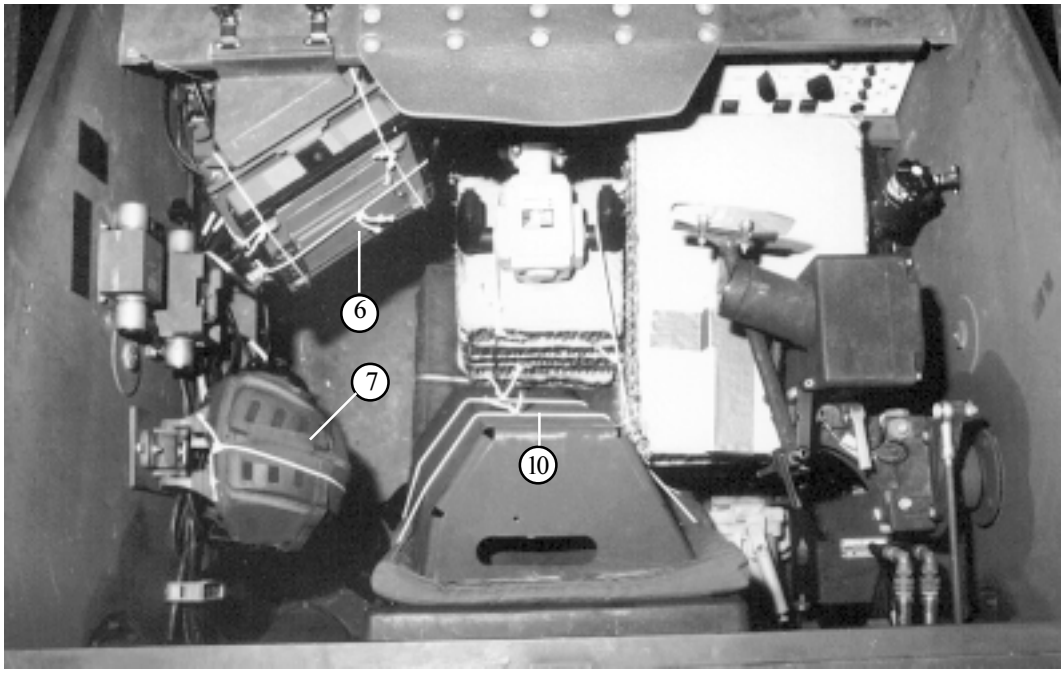

6 Secure the control display terminal in its bracket with type III nylon cord.

7 Secure the operator's headset with type III nylon cord.

8 Remove the flash suppressor and the brass collection tray from the 50-caliber machine gun (not shown).

9 Tape the turret mounting bolts inside the brass collection tray. Pad the flash suppressor with cellulose padding and tie to the inside of the tray with type III nylon cord (not shown).

10 Secure the brass collection tray to the seat with two lengths of type III nylon cord.

11 Secure all loose cables and objects with type III nylon cord (not shown).

12 Close the canopy and install the road cover if available (not shown).

Figure 7-8. Turret prepared (continued)

7-6. Positioning Truck on Platform and Installing the Drive Off Aid

Position the truck on the platform and install the drive off aid as shown in Figure 7-9.

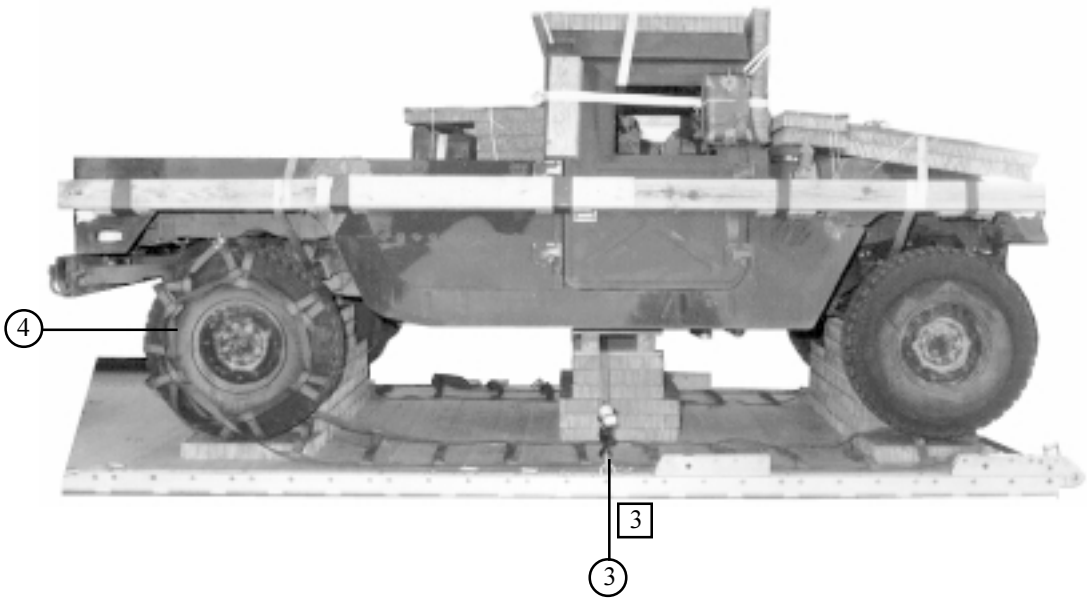

1. Attach a 9-foot (2-loop), type XXVI nylon webbing sling to each front airlift bracket with a medium clevis. Attach a 12-foot (2-loop), type XXVI nylon webbing sling to each lifting shackle located on the outside ends of rear bumper (not shown). Remove the lift kit after the truck is positioned on the platform.

2. Position the truck on honeycomb stacks 1, 2, and 3 with the front of the truck aligned with the front edge of the platform.

3. Route a lashing through clevis 3A, back through its own D-ring, through the center hole of stack 2, and connect the load binder to clevis 3.

4. Adapt the procedures shown in Figure 2-18, FM 10-517/TO 13C7- 1-111 to install the drive off aid on the truck.

Figure 7-9. Truck positioned and drive off aid installed

7-7. Lashing Ramps to Platform

Lash the ramps used for mounting the Avenger turret as shown in Figure 7-10.

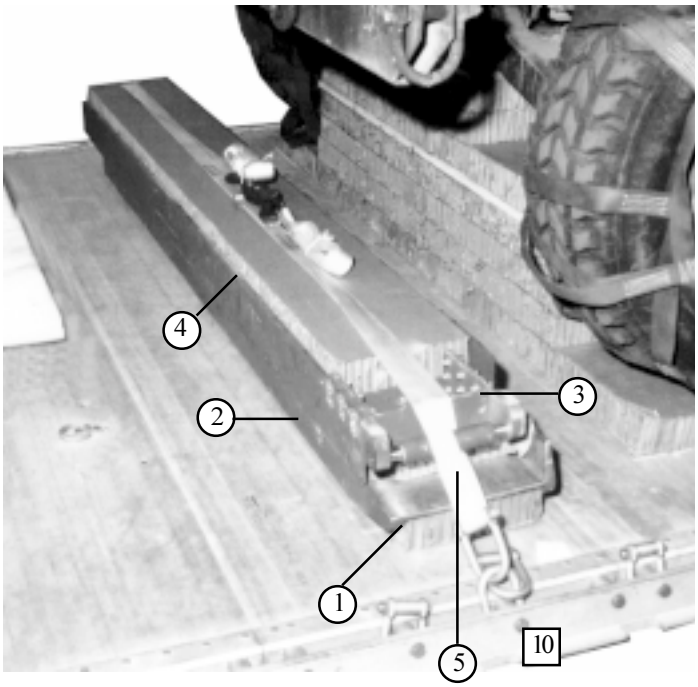

1. Center an 80- by 10-inch piece of honeycomb between clevises 10 and 10A.
2. Place one ramp over the honeycomb. Place a second 80-by 10-inch piece of honeycomb on top of the ramp.
3. Place the second ramp on top of the honeycomb placed in step 2 with the roller facing the opposite way from the roller of the first ramp.
4. Place an 80- by 10-inch piece of honeycomb on top of the second ramp.
5. Route a 30-foot lashing through clevis 10, through the roller, over the honeycomb and ramps, through the roller on the opposite side, and through clevis 10A. Close the load binder on top of the honeycomb and ramps.

Figure 7-10. Ramps lashed to platform

7-8. Lashing Truck

Lash the truck to the platform according to FM 10-500-2/ TO 13C7-1-5 and route the lashings as shown in Figure 7-11.

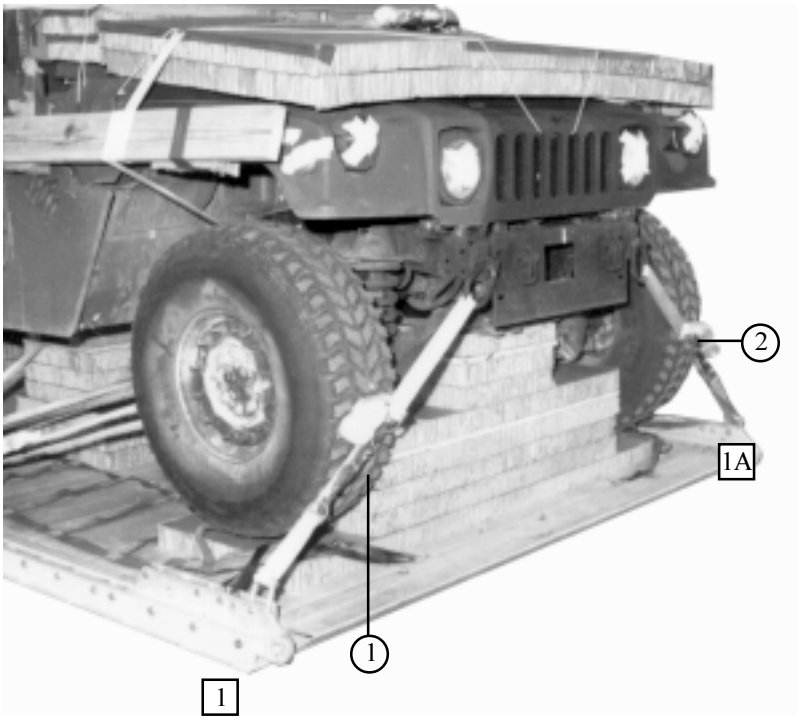

Lashing Number	Tiedown Clevis Number	Instructions
		Pass lashing:
1	1	Through front truck tie-down, right side.
2	1A	Through front truck tie-down, left side.

Figure 7-11. Truck lashed to platform

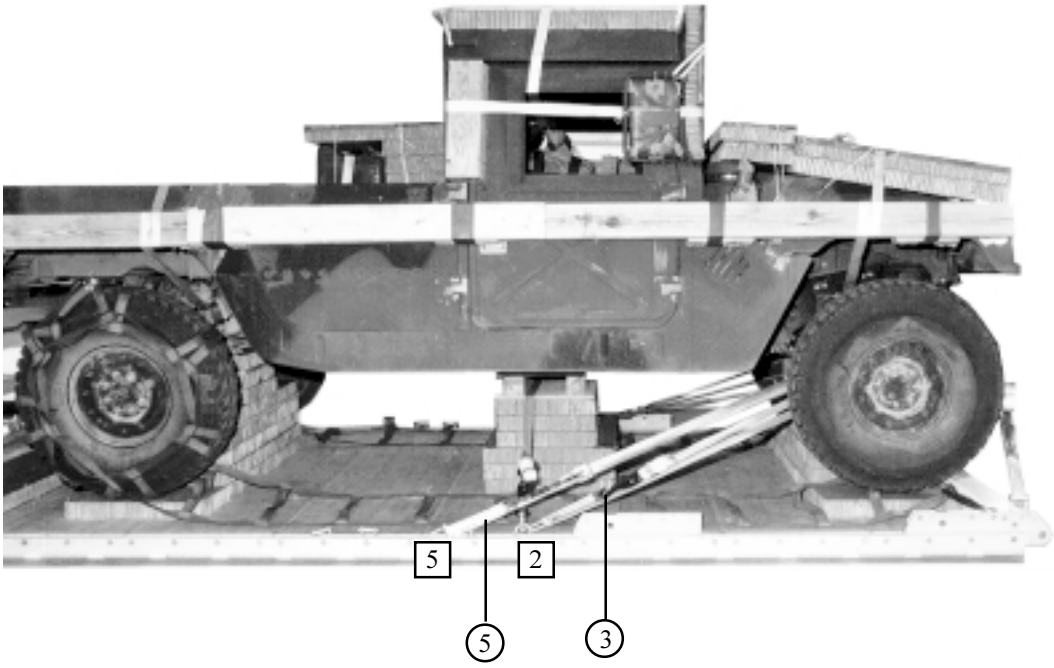

Lashing Number	Tiedown Clevis Number	Instructions
		Pass lashing:
3	2	Around lower front control arm, right side.
4	2A	Around lower front control arm, left side.
5	5	To tie-down bracket behind front coil spring, right side.
6	5A	To tie-down bracket behind front coil spring, left side.

Figure 7-11. Truck lashed to platform (continued)

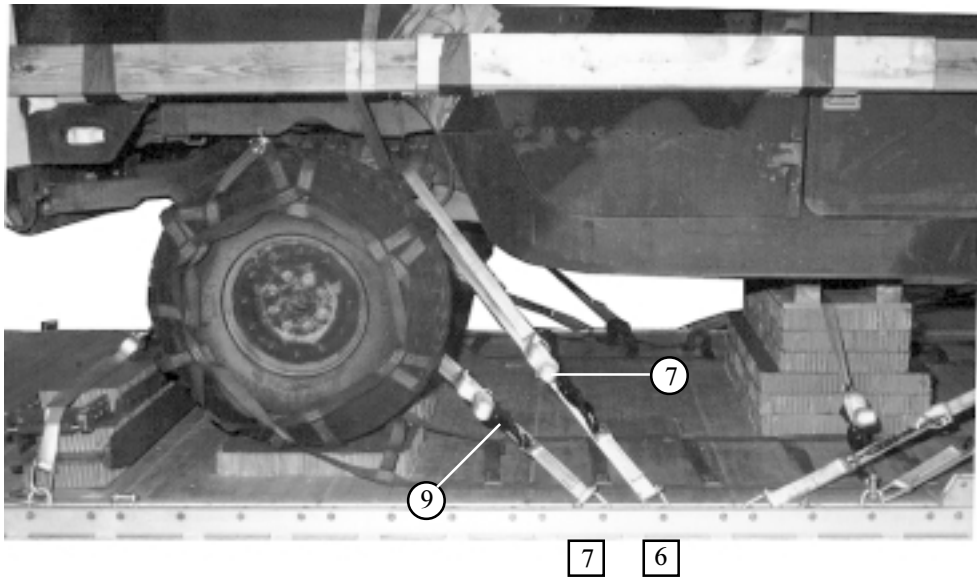

Lashing Number	Tiedown Clevis Number	Instructions
		Pass lashing:
7	6	Through tie-down bracket in front of rear coil spring, right side.
8	6A	Through tie-down bracket in front of rear coil spring, left side.
9	7	Around rear lower control arm, right side.
10	7A	Around rear lower control arm, left side.

Figure 7-11. Truck lashed to platform (continued)

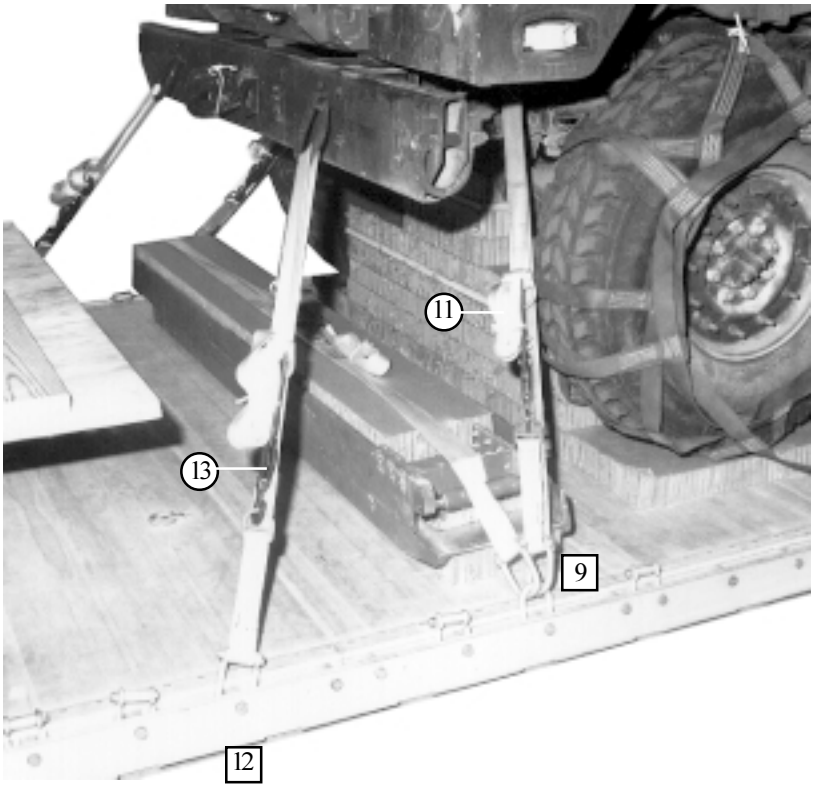

Lashing Number	Tiedown Clevis Number	Instructions
		Pass lashing:
11	9	Through tie-down bracket behind the rear coil spring, right side.
12	9A	Through tie-down bracket behind the rear coil spring, left side.
13	12	Through rear truck tie-down, right side.
14	12A	Through rear truck tie-down, left side.

Figure 7-11. Truck lashed to platform (continued)

7-9. Positioning and Preparing the Turret on the Platform

Position and prepare the turret on the platform as shown in Figure 7-12.

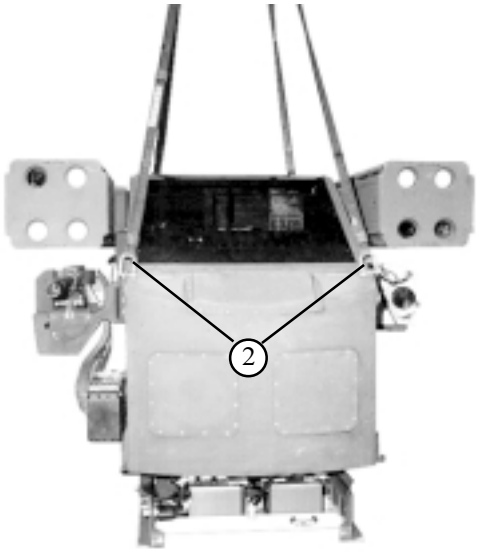

FRONT

NOTE: These photos show an unmodified turret. The modified turret is positioned using the same lift kit and lift provision.

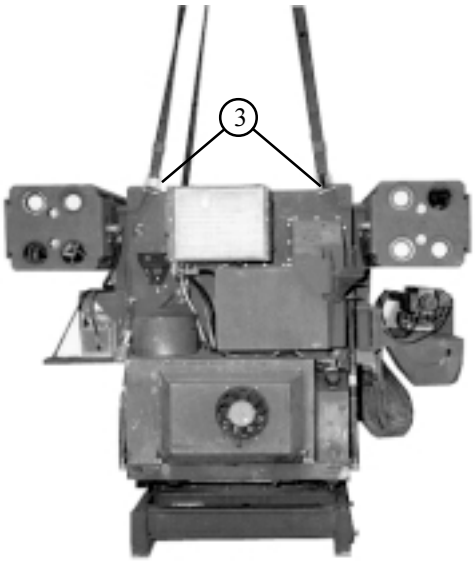

REAR

1. Ensure the turret is in the locked position.
2. Attach an 11-foot (2-loop), type XXVI nylon webbing sling to each front lift provision with a platform clevis.
3. Attach a 9-foot (2-loop), type XXVI, nylon webbing sling to each rear lift provision with a platform clevis.

Figure 7-12. Turret positioned and prepared

NOTES: 1. All measurements are given in inches.
2. This drawing is not to scale.

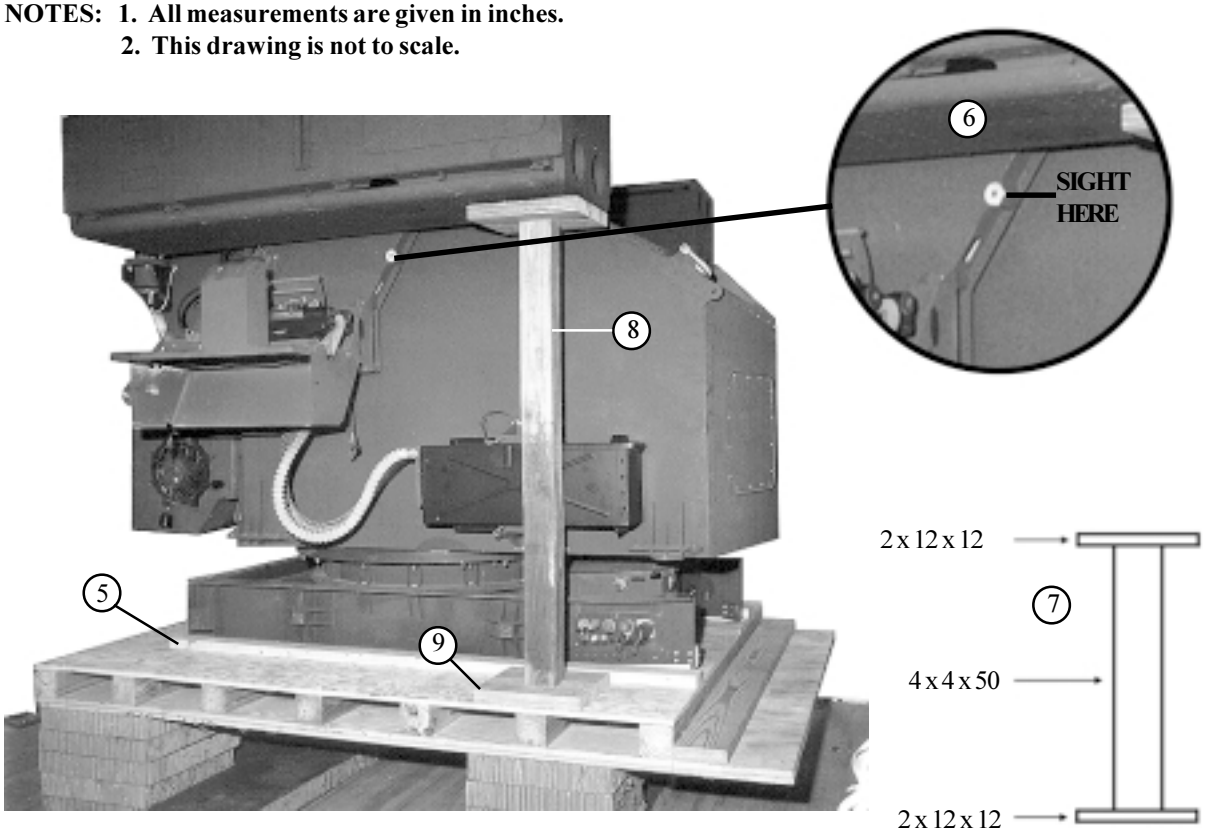

4 Position the turret facing forward, centered and one inch from the forward edge of the strongback. Remove the lift kit and leave the platform clevises on the front lift points of the turret.

5 Nail a 2- by 4- by 73-inch piece of lumber to the top of the strongback flush along each side of the weapon system mount.

6 Ensure the system is at mechanical zero by sighting through the silver colored metal hole on the exterior of the turret. If the exterior hole and the interior hole are aligned you can see either the inside wall of the turrert or the locking pin protruding through the two holes. Either situation achieves mechanical zero.

7 Build two missile pod supports as shown above.

8 Place a support under each missile pod. Align the front edge of the support with the front edge of the pod . Align the outside edges of the supports with the outside edges of the strongback.

9 Nail the bottom of the pod supports to the load spreader. Drive a nail through each corner of the support bottoms and bend the nails under the top layer of plywood.

Figure 7-12. Turret positioned and prepared (continued)

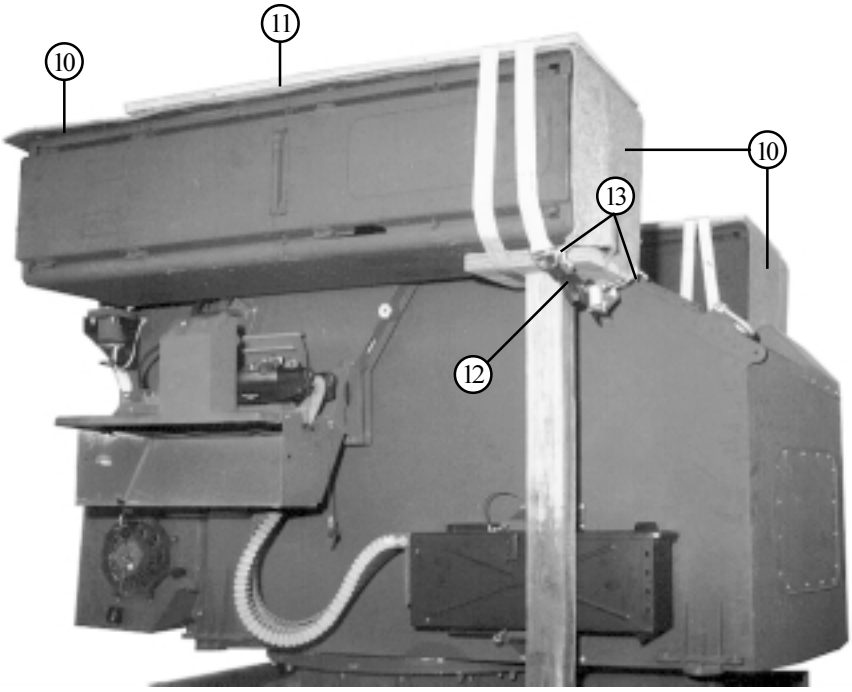

(10) Place an 80- by 18-inch piece of 1/2-inch felt over each pod, extending the front edge of the 1/2-inch felt down to the front lower edge of of the pod.

(11) Place a 3/4- by 18- by 48-inch piece of plywood over the 1/2-inch felt on each pod. Align the front edge of the plywood with the front edge of the pod.

(12) Beginning at the front inside edge of each pod support, wrap a 15-foot lashing over the pod and behind the support upright. Pass the lashing over the pod and secure it so the load binder is in front of the upright and under the top piece of the support.

(13) Punch a hole in each front corner of the1/2-inch felt placed in step 10 above. Tie the front corners of the 1/2-inch felt to the D-rings on the lashings with type III nylon cord.

Figure 7-12. Turret positioned and prepared (continued)

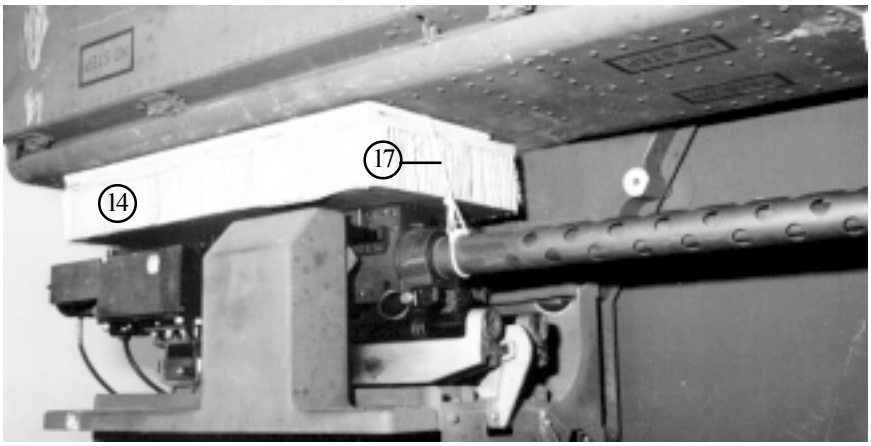

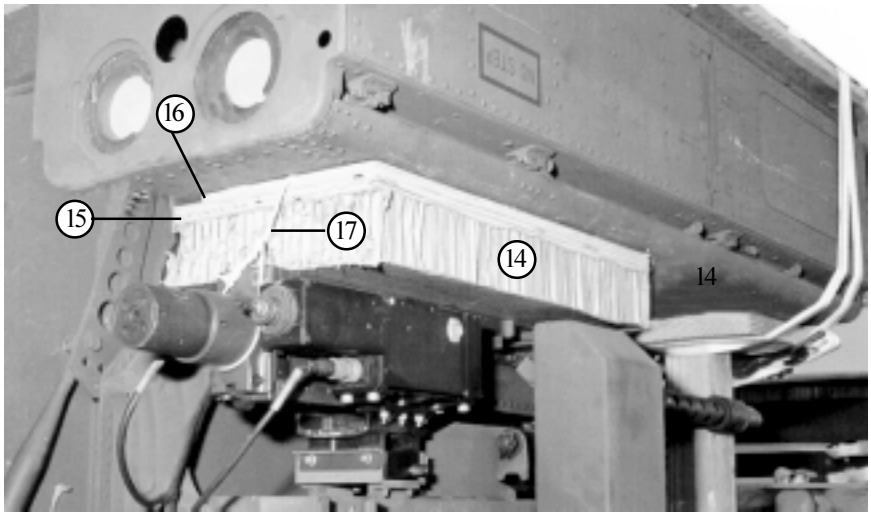

(14) Center a 24- by 12-inch piece of honeycomb on top of the gun.

(15) Place a 24- by 12- by 3/4-inch piece of plywood flush on the honeycomb.

(16) Place a 24- by 9 1/2- by 1/4-inch piece of plywood over the plywood placed in step 15 above. Place this piece flush with the outside edges of the other pieces.

(17) Secure these pieces to the gun with type III nylon cord.

Figure 7-12. Turret positioned and prepared (continued)

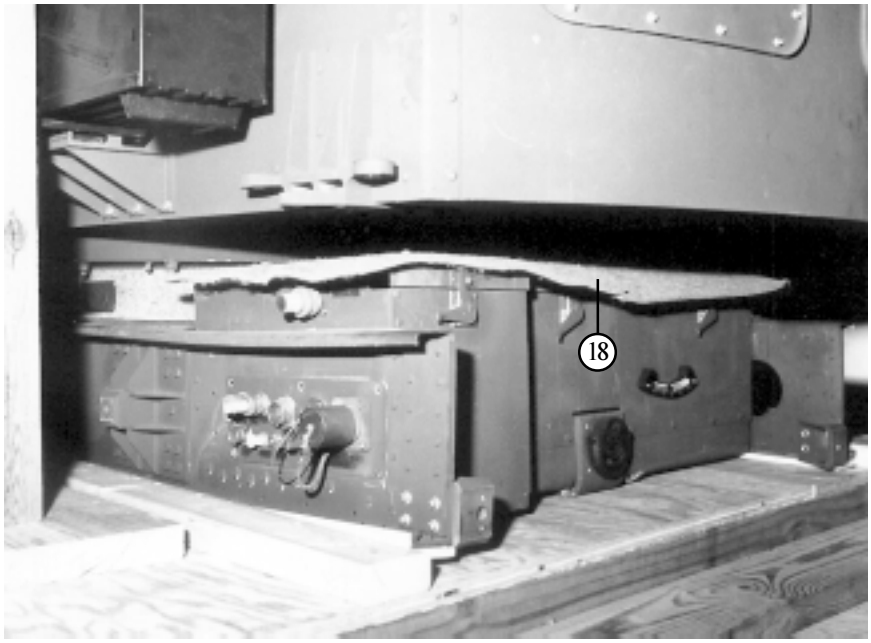

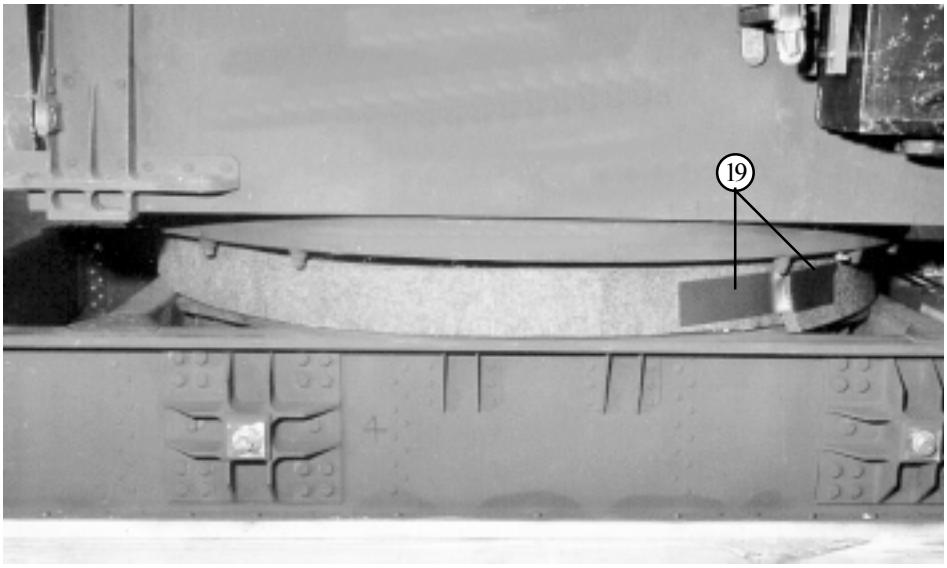

(18) Cover the battery case with a 16- by 34-inch piece of 1/2-inch felt.

(19) Pad the turret base with three 3- by 48-inch pieces of 1/2-inch felt. Overlap and tape the pieces in place.

Figure 7-12. Turret positioned and prepared (continued)

7-10. Lashing Turret

Lash the turret to the platform according to FM 10-500-2/ TO 13C7-1-5 and as shown in Figure 7-13. Lash the turret to the strongback as shown in Figure 7-14.

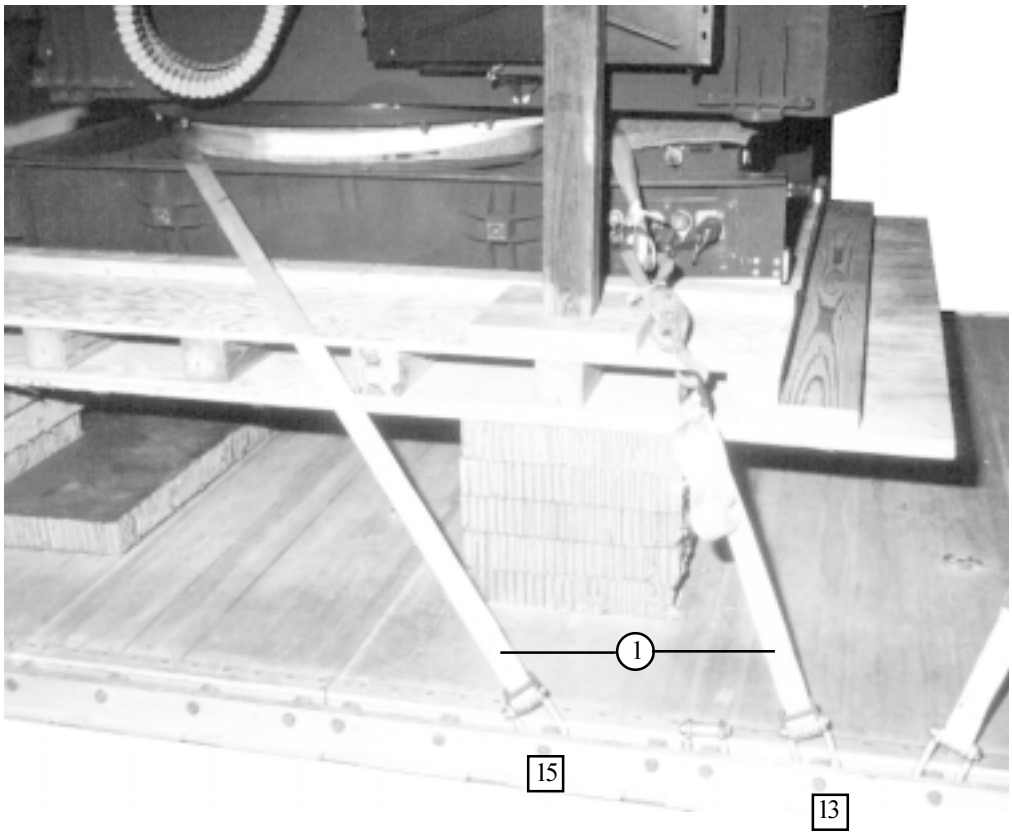

Lashing Number	Tiedown Clevis Number	Instructions
1	13 and 15	Pass a 15-foot lashing through each clevis and through its own D-ring. Pass the lashing from clevis 15 around the padded turret base. Secure both lashings together with two D-rings and a load binder.
2	13A and 15A	Pass a 15-foot lashing through each clevis and through its own D-ring. Pass the lashing from clevis 15A around the padded turret base. Secure both lashings together with two D-rings and a load binder.

Figure 7-13. Turret lashed

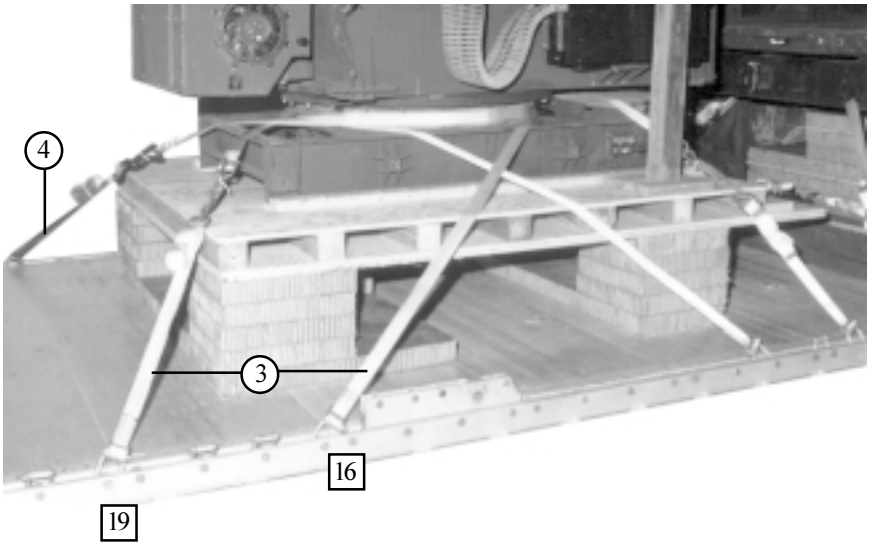

Lashing Number	Tiedown Clevis Number	Instructions
3	19 and 16	Pass a 15-foot lashing through each clevis and through its own D-ring. Pass the lashing from clevis 19 around the padded turret base. Secure both lashings together with two D-rings and a load binder.
4	19A and 16A	Pass a 15-foot lashing through each clevis and through its own D-ring. Pass the lashing from clevis 19A around the padded turret base. Secure both lashings together with two D-rings and a load binder.

Figure 7-13. Turret lashed (continued)

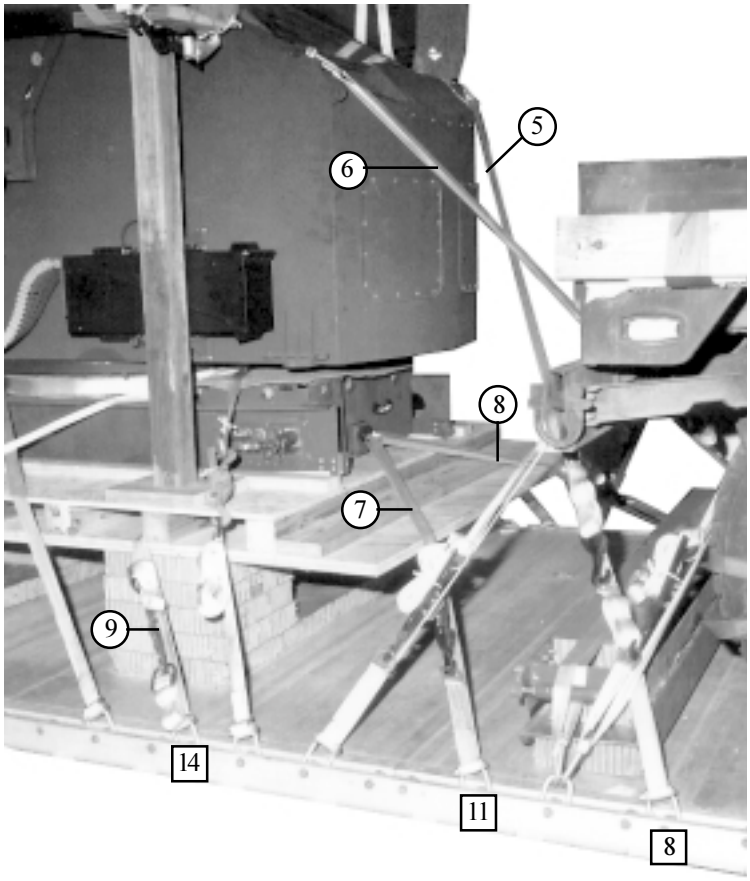

Lashing Number	Tiedown Clevis Number	Instructions
5	8	Pass a 30-foot lashing through the left front lift provision on top of the turret.
6	8A	Pass a 30-foot lashing through the right front lift provision on top of the turret.
7	11	Pass lashing through the winch clevis.
8	11A	Pass lashing through the winch clevis.
9	14 and 14A	Pass a 30-foot lashing through clevis 14, through the second hole in the strongback, through clevis 14A, and back through the second hole in the strongback. Secure both lashings together with two D-rings and a load binder.

Figure 7-13. Turret lashed (continued)

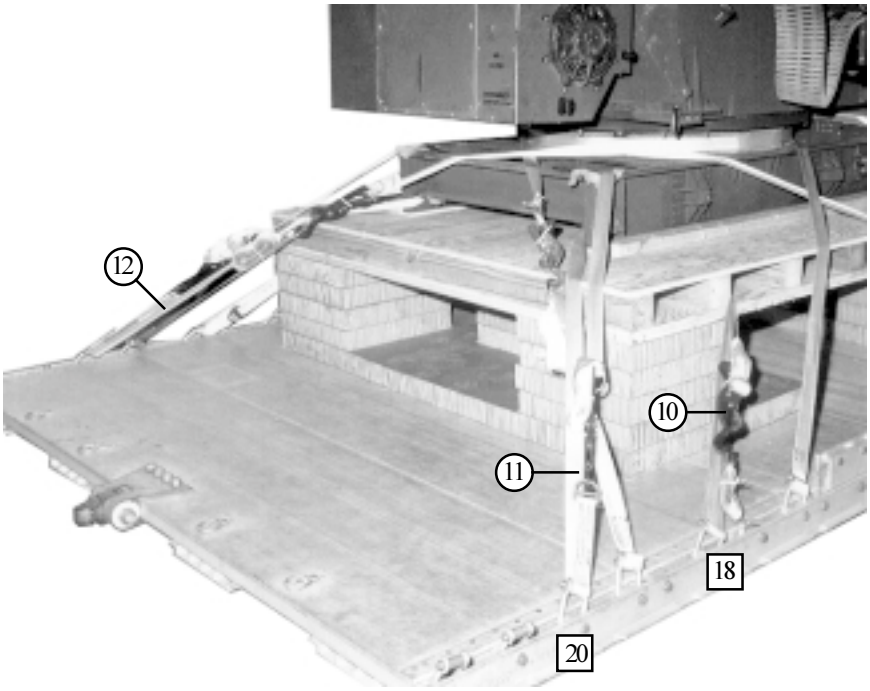

Lashing Number	Tiedown Clevis Number	Instructions
10	18 and 18A	Pass a 30-foot lashing through clevis 18, through the fifth hole in the strongback, through clevis 18A, and back through the fifth hole in the strongback. Secure both lashings together with two D-rings and a load binder.
11	20	Pass lashing around crossbeam on turret base, right side.
12	20A	Pass lashing around crossbeam on turret base, left side.

Figure 7-13. Turret lashed (continued)

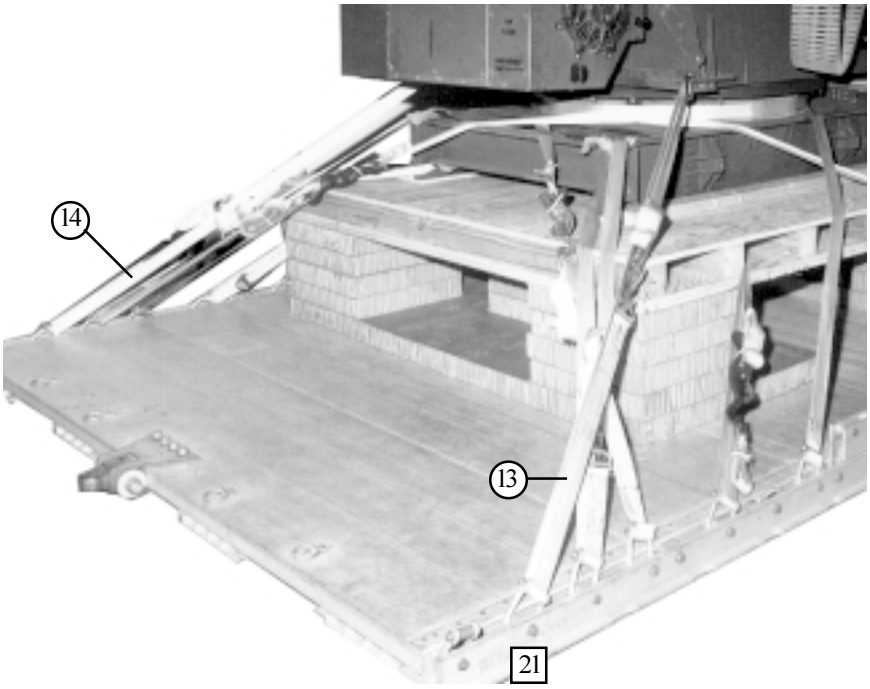

Lashing Number	Tiedown Clevis Number	Instructions
13	21	Attach a platform clevis to the lower right rear mounting hole. Pass a lashing through the tiedown clevis.
14	21A	Attach a platform clevis to the lower left rear mounting hole. Pass a lashing through the tiedown clevis.

Note

When rigging the Avenger without an ECU, install the platform clevises in the rear lifting points located on the top right and left sides of the turret. Lashings 13 and 14 are 30-foot lashings and are routed through the platform clevises previously installed.

Figure 7-13. Turret lashed (continued)

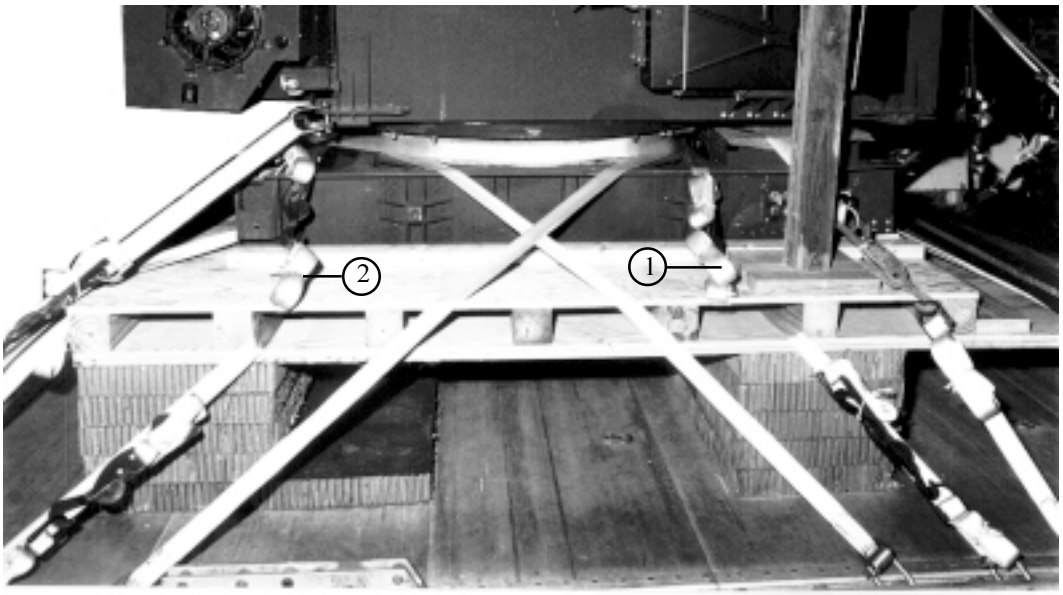

(1) Pass a 30-foot lashing through the second hole in the strongback and back over the turret base. Secure the lashing on the right with two D-rings and a load binder.

(2) Pass a 30-foot lashing through the fifth hole in the strongback and back over the turret base. Secure the lashing on the right with two D-rings and a load binder.

Figure 7-14. Turret lashed to platform

7-11. Installing Supports for Guns, Laser Range Finder, and Environmental Control Unit

Install the honeycomb supports for the gun as shown in Figure 7-15. Install the support for the environmental control unit as shown in Figure 7-17. Install the honeycomb supports for the laser range finder (LRF) as shown in Figure 7-16. Install the support for the unmodified environmental control unit as shown in Figure 7-18.

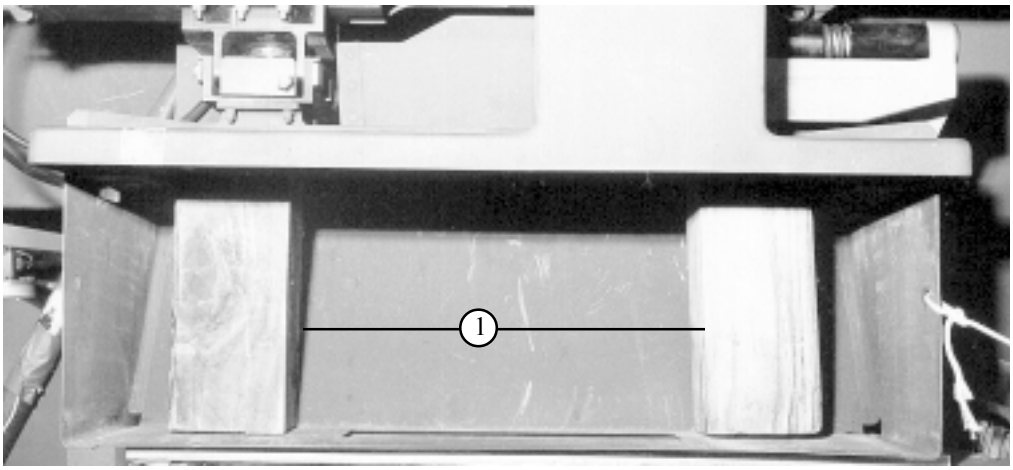

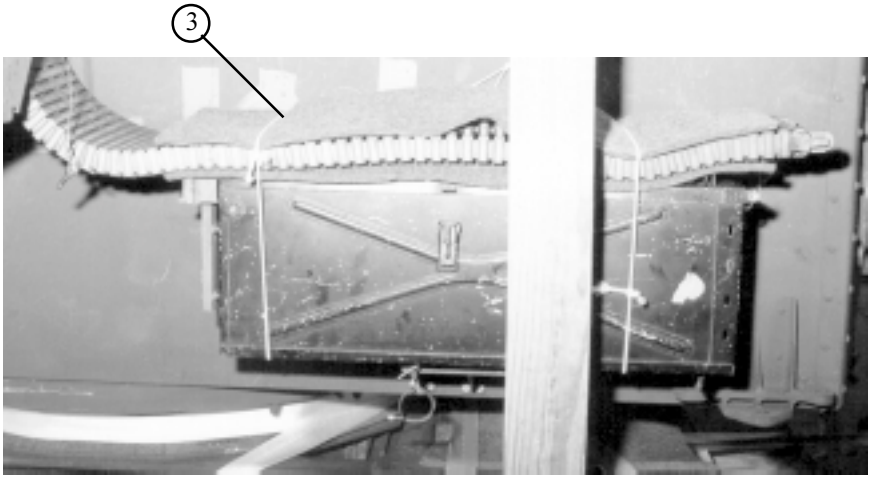

1. Place two 8 1/4-inch pieces of 4- by 4-inch lumber vertically in the brass collection tray bracket.
2. Place a 7- by 25-inch piece of honeycomb in the brass collection tray, over the lumber placed in step 1, and secure it in place with type III nylon cord (not shown).
3. Disconnect the ammunition feed chute from the gun and the ammunition box. Pad the chute on both sides with 1/2-inch felt, and tie it to the top of the box with type III nylon cord.

Figure 7-15. Gun supported

NOTES: 1. All measurements are given in inches.
2. This drawing is not to scale.

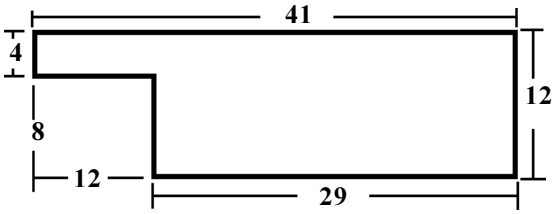

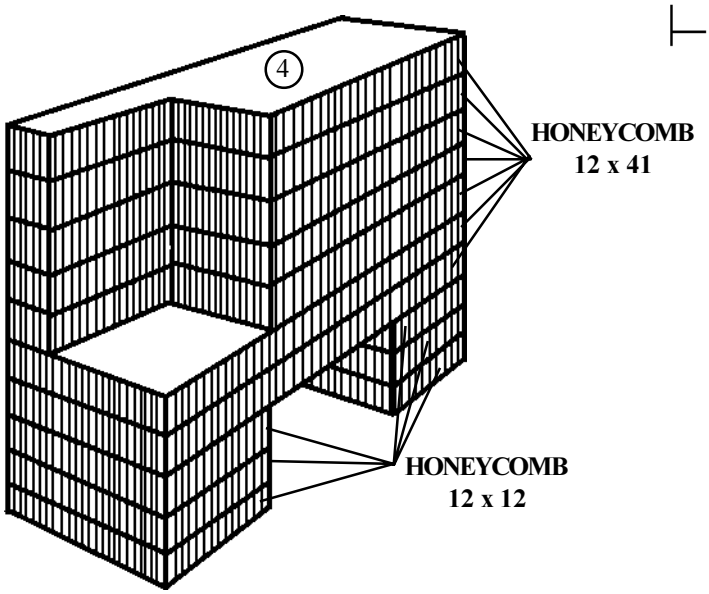

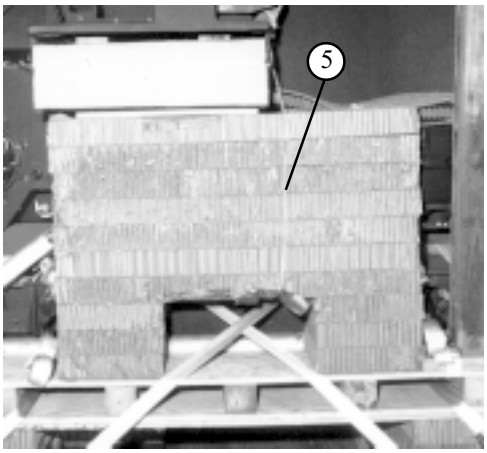

(4) Build the gun support stack as shown.

(5) Place the honeycomb stack under the gun, with the cutout area flush against the ammunition box. Place a 20- by 10- by 3/4-inch piece of plywood between the support stack and the gun. Tie the stack to convenient points with type III nylon cord. Tape the honeycomb where the type III nylon contacts the edges to prevent cutting.

Figure 7-15. Gun supported (continued)

NOTES: 1. All measurements are given in inches.
2. This drawing is not to scale.

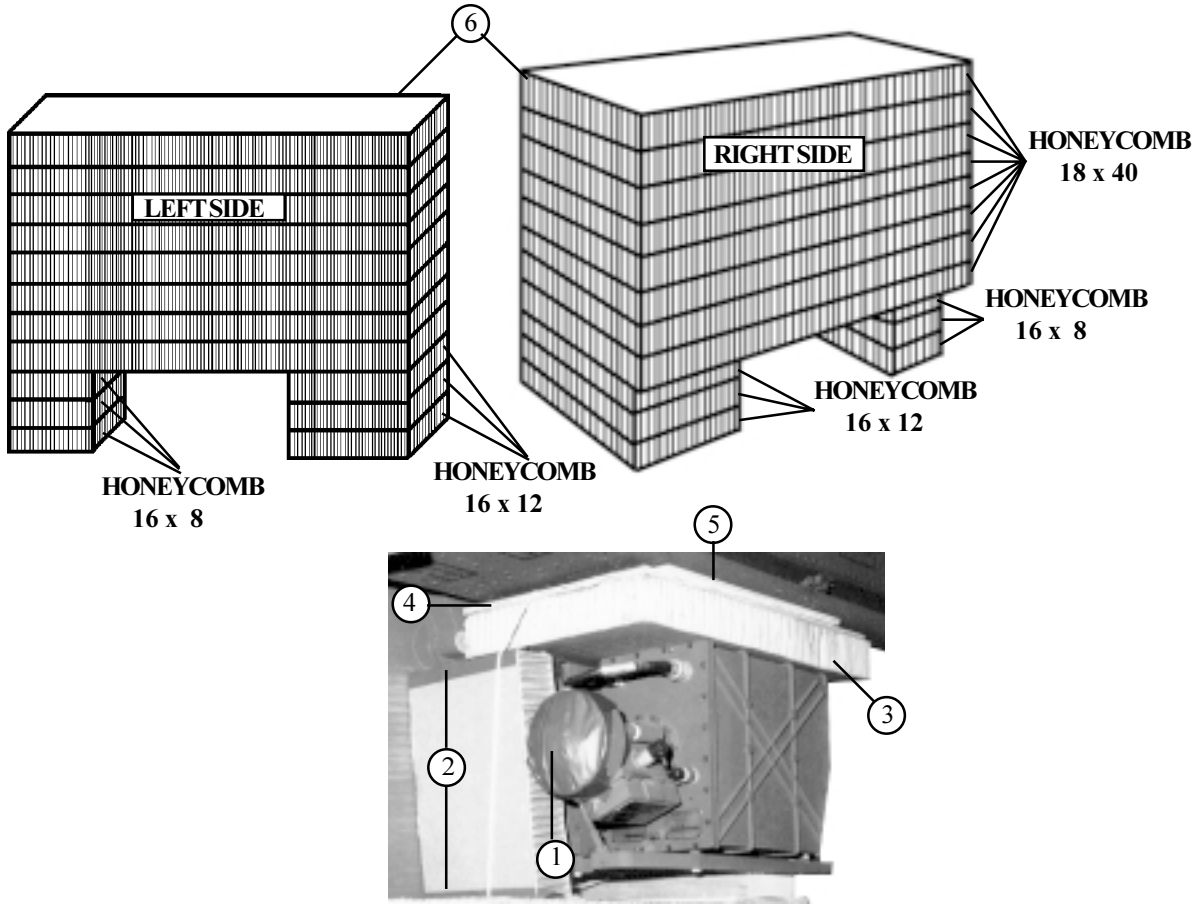

1. Cover the LRF lens with the lens cap or cellulose padding and tape.
2. Tape the edges of an 11- by 16-inch piece of honeycomb and place between the turret and the LRF.
3. Place a 16- by 26-inch piece of honeycomb on top of the LRF.
4. Place a 16- by 26- by 1/2-inch piece of plywood on top of the honeycomb in step 3.
5. Center and align the outside edges of an 8- by 21- by 1/2-inch piece of plywood over the plywood placed in step 4. Secure the honeycomb and plywood placed above with type III nylon cord.
6. Build the LRF support stack as shown.

Figure 7-16. LRF supported

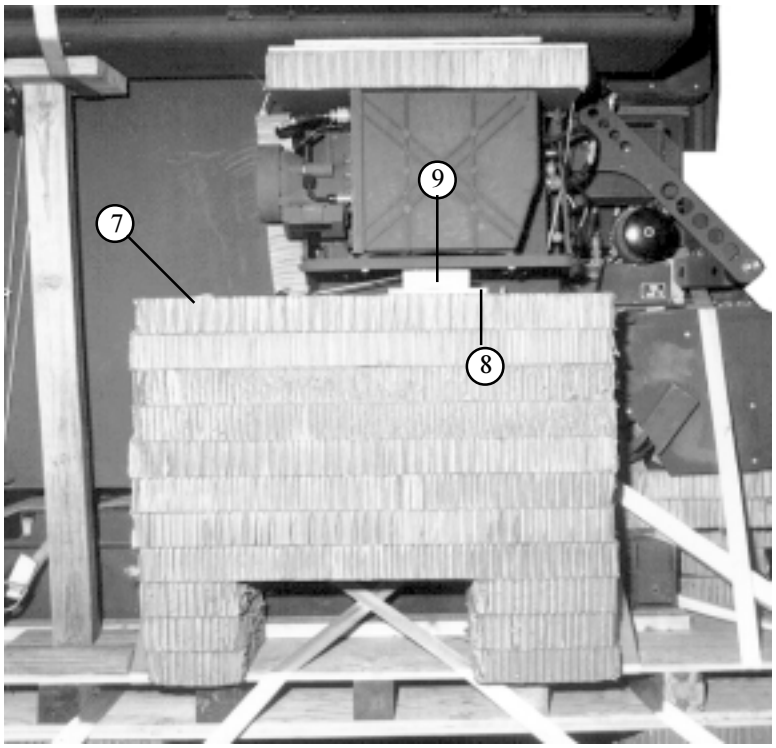

7 Place the LRF support stack under the LRF with the notched portion toward the turret.

8 Center an 8- by 19- by 1/2-inch piece of plywood under the LRF. Align the outside edge with the LRF bracket.

9 Center a 16-inch piece of 2- by 6-inch lumber between the plywood placed in step 8 and LRF bracket. If the plywood and lumber do not fit snugly, shim with 1/4-inch plywood.

Figure 7-16. LRF supported (continued)

NOTES:
1. **When rigging the Avenger without the modified ECU, omit pages 7-41 and 7-42.**
2. **All measurements are given in inches.**
3. **This drawing is not to scale.**

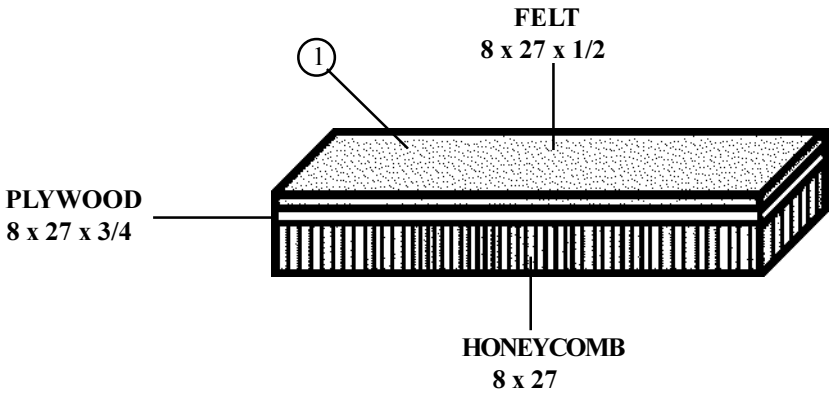

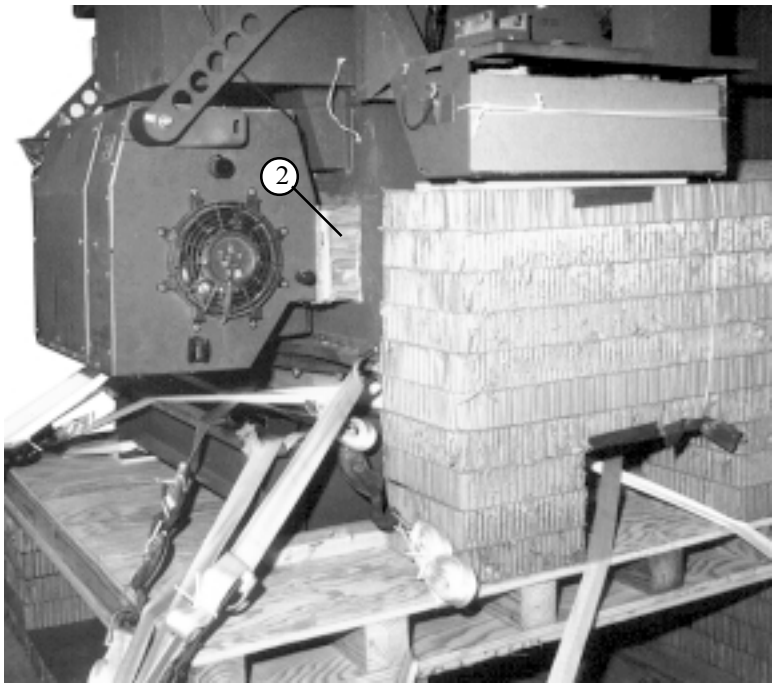

(1) Build the honeycomb, plywood, and felt stack as shown. Glue and nail pieces together as required.

(2) Place the stack assembled in step one between the ECU and the turret base.

Figure 7-17. Modified ECU supported

NOTES: 1. All measurements are given in inches.
2. This drawing is not to scale.

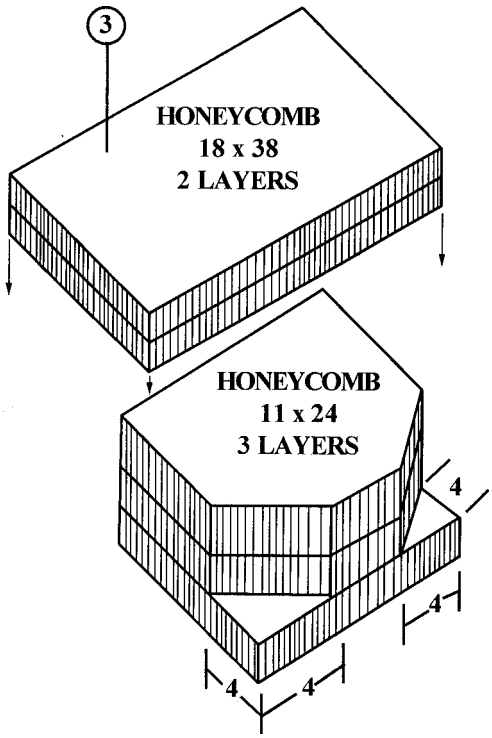

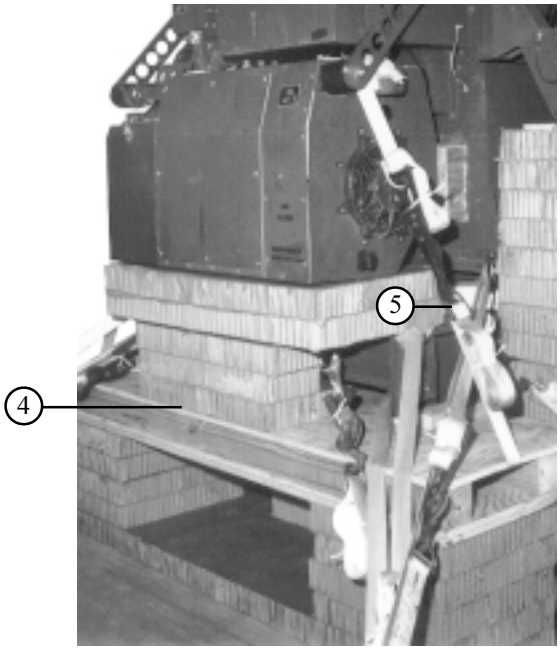

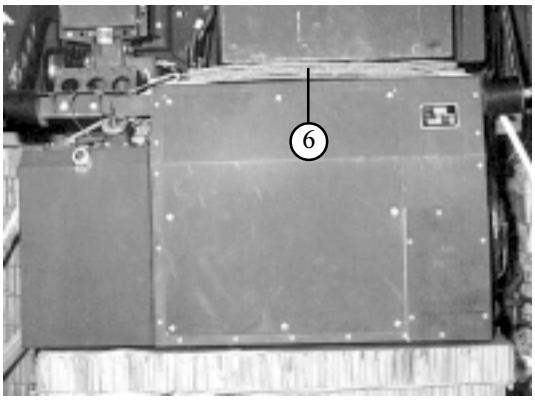

(3) Build the ECU support stack as shown. Center and glue the top two layers of honeycomb on top of the bottom three layers.

(4) Place the ECU support stack under the ECU aligning the rear of the stack with the rear of the strongback.

(5) Route a 30-foot lashing through the sixth hole of the strongback and over the ECU.

(6) Place pieces of 1/2-inch felt to fill the area between the primary power unit (PPU) and ECU.

Figure 7-17. Modified ECU supported

NOTES:
1. **When rigging the Avenger without the modified ECU, use these procedures.**
2. **All measurements are given in inches.**
3. **This drawing is not to scale.**

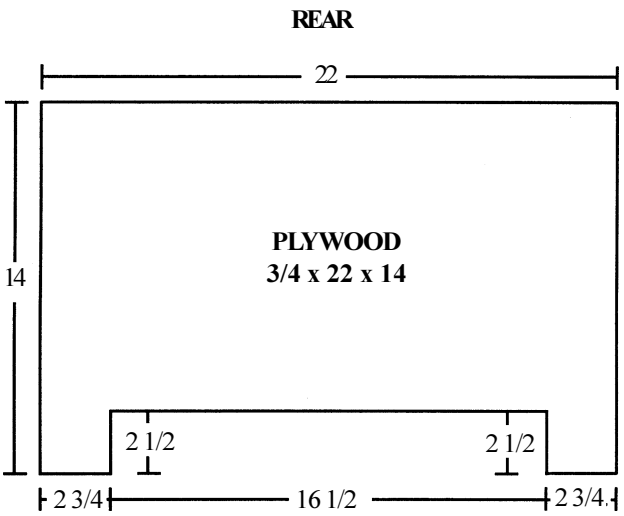

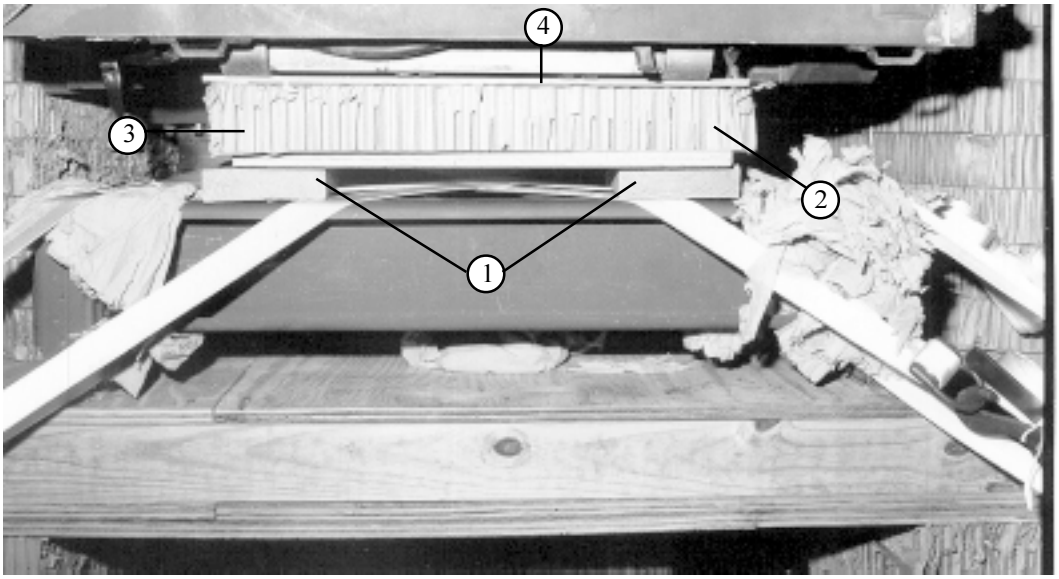

1. Place two 12-inch pieces of 2- by 6-inch lumber 13 inches apart on the turret base under the ECU.
2. Center a piece of 3/4-inch plywood cut as shown over the lumber, with the cutout facing the front.
3. Center a 10- by 24-inch piece of honeycomb over the plywood.
4. Fit a 10- by 24-inch piece of 1/4-inch plywood in the remaining space. Be sure the fit of these pieces is snug. If not, wedge another piece of 1/4-inch plywood in the space.

Figure 7-18. Unmodified ECU supported

7-12. Covering Turret Canopy

Install the canopy protection board and the load cover as shown in Figure 7-19.

NOTES: 1. All measurements are given in inches.
2. This drawing is not to scale.
3. All holes are 1/2 inch.

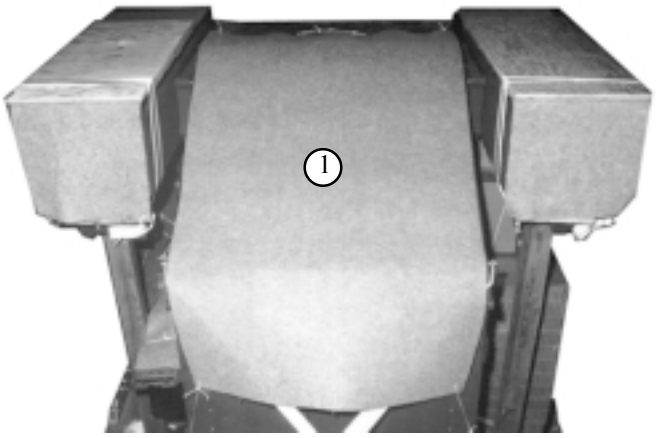

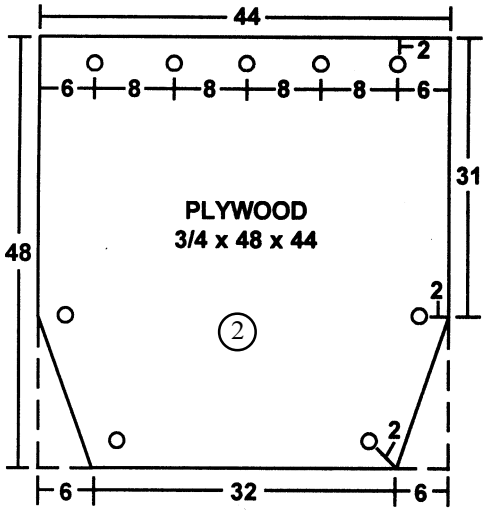

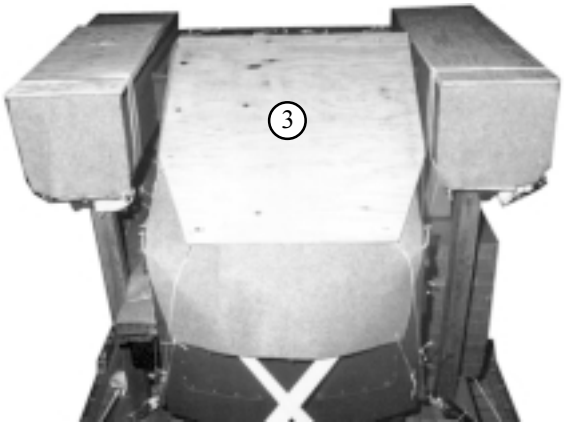

(1) Place a 1/2- by 43- by 72-inch piece of 1/2-inch felt over the canopy with the front edge of the 1/2-inch felt over hanging the front edge of the turret 16 inches. Punch holes in the corners of the 1/2-inch felt and secure it to convenient points with type III nylon cord.

(2) Make the canopy protection board with 3/4-inch plywood as shown.

(3) Place the protection board over the 1/2-inch felt as shown. Ensure the front edge covers the IFF antenna. Secure the protection board to convenient points with type III nylon cord.

Figure 7-19. Canopy protected

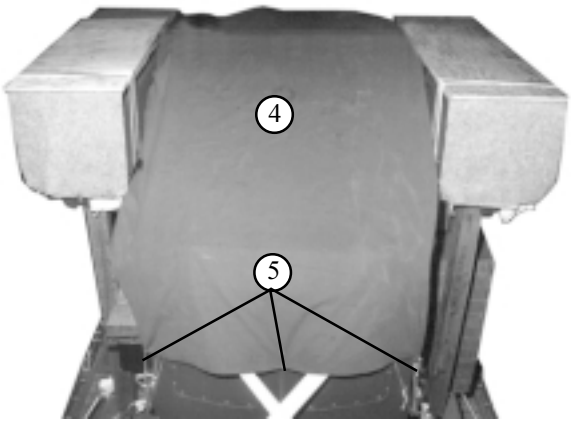

FRONT

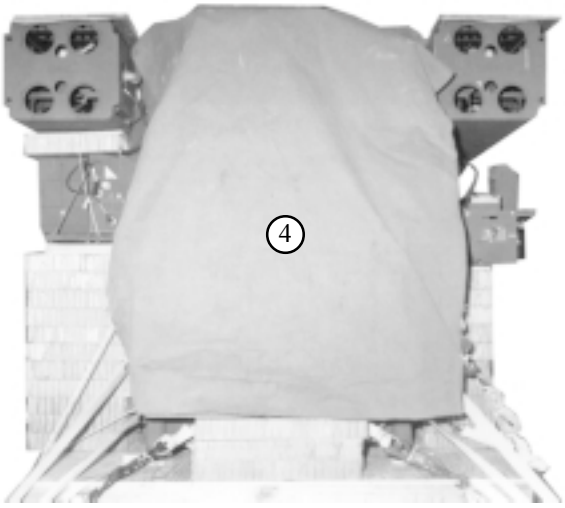

REAR

(4) Place a load cover 58 inches wide and 165 inches long over the turret. Extend the rear edge of the cover to the bottom of the ECU base.

(5) Tie the cover to convenient points on the load with type III nylon cord.

Figure 7-19. Canopy protected (continued)

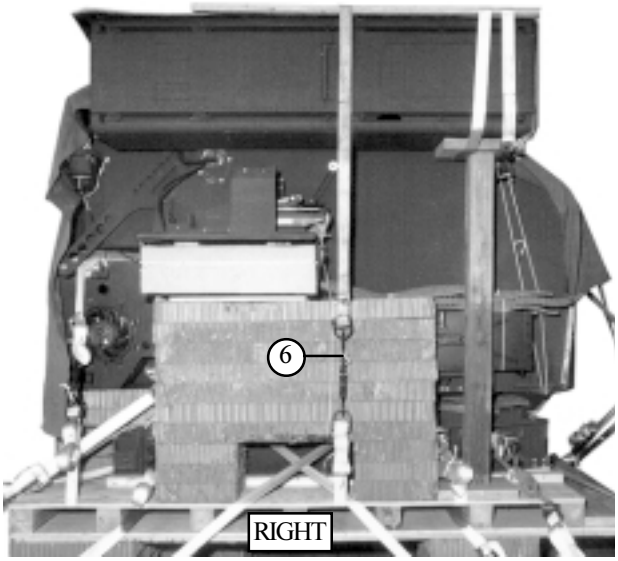

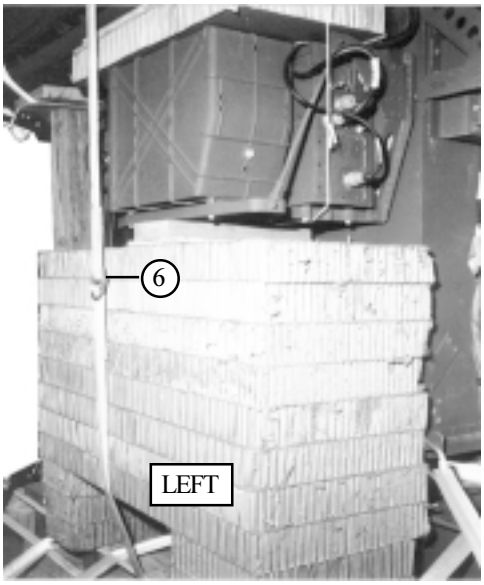

(6) Pass a 30-foot lashing through the third hole in the strongback and over the top of the turret. Ensure the D-rings and load binder are positioned on the honeycomb support stack and not against metal.

Figure 7-19. Canopy protected (continued)

7-13. Suspension Slings Installed and Safetied

Install and safety the suspension slings according to FM 10-500-2/TO 13C7-1-5 and as shown in Figure 7-20.

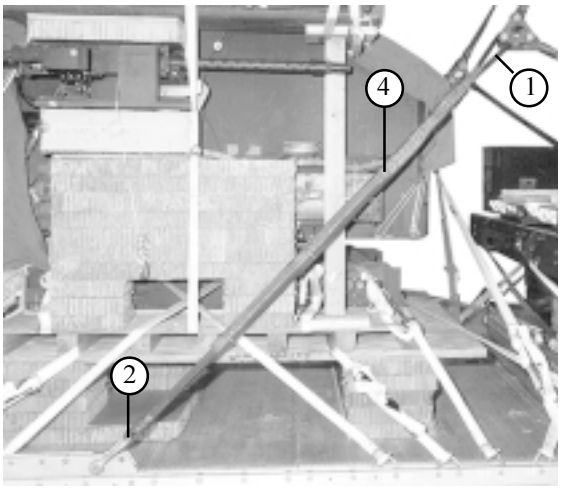

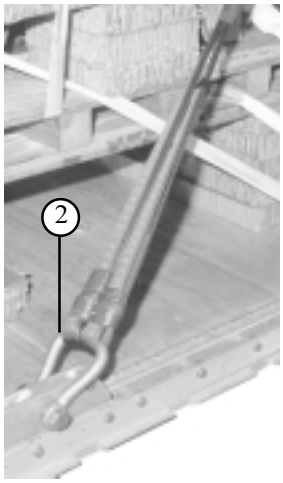

1. Pass a 16-foot (2-loop), type XXVI nylon webbing sling around one point of a 3-point link.
2. Place both ends of the sling on the bell portion of a large suspension clevis. Bolt the clevis on the right rear suspension link.
3. Repeat steps 1 and 2 on the left side.
4. Pad the rear suspension slings from 30 inches above the clevises to 90 inches above the clevises with 1/2-inch felt. Tape the 1/2-inch felt in place.

Figure 7-20. Suspension slings installed and safetied

NOTES: 1. All measurements are given in inches.
2. This drawing is not to scale.

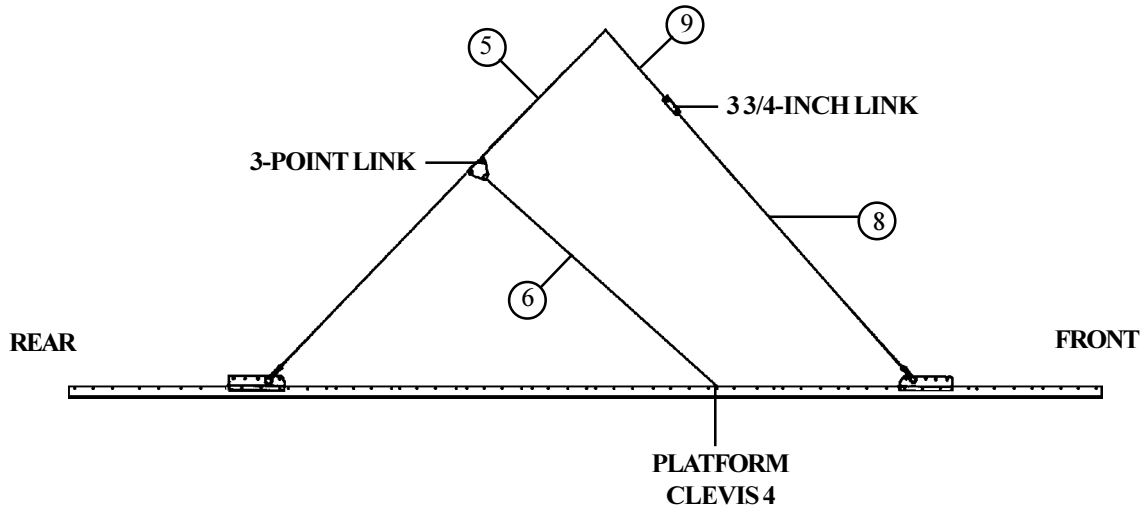

(5) Attach a 9-foot (2-loop), type XXVI nylon webbing sling to the top point of each 3-point link.

(6) Attach an 11-foot (2-loop), type XXVI nylon webbing sling to the third point (inside point) of the 3-point link. Attach the other end of the sling to platform clevis 4.

(7) Repeat the procedures in step 6 on the left side and attach the sling to platform clevis 4A.

(8) Attach a 12-foot (2-loop), type XXVI nylon webbing sling to each front suspension link with a large suspension clevis. Attach the other end of the 12-foot slings to a 3 3/4-inch link.

(9) Attach a 3-foot (2-loop), type XXVI nylon webbing sling to the other end of the 3 3/4-inch link installed in step 8. Pad the 3 3/4-inch links with 1/2-inch felt and secure the 1/2-inch felt with tape.

Figure 7-20. Suspension slings installed and safetied (continued)

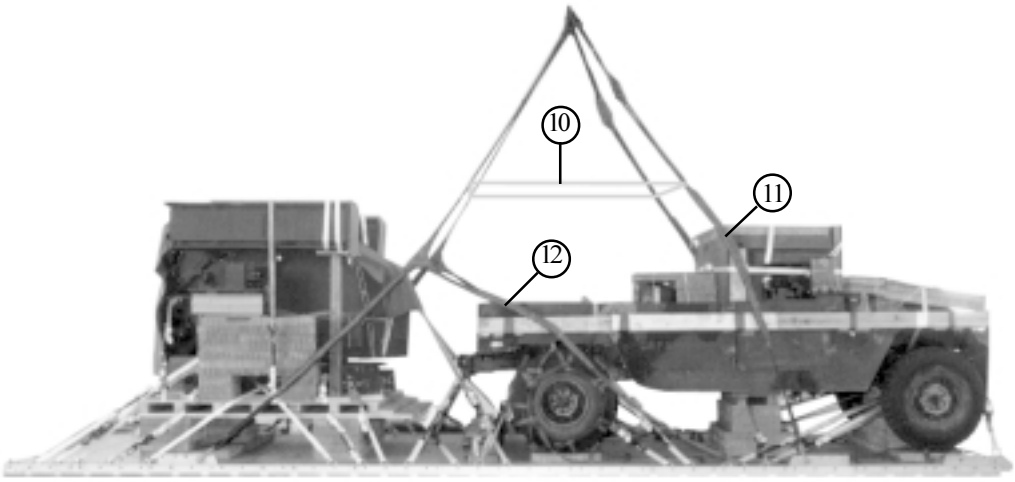

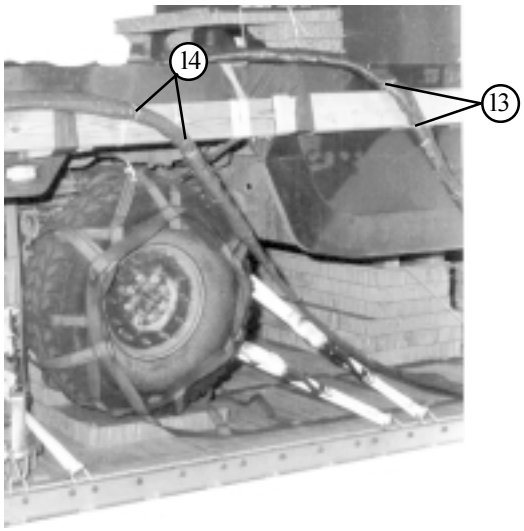

(10) Raise the suspension slings and install the deadman's tie to the front and rear slings according to FM 10-500-2/TO 13C7-1-5.

(11) Pad the front suspension slings from a point 32 inches above the suspension clevises to a point 96 inches above the clevises with 1/2-inch felt. Tape the 1/2-inch felt in place.

(12) Pad the center suspension slings from a point 60 inches above the platform clevises to a point 108 inches above the platform clevises with 1/2-inch felt. Tape the 1/2-inch felt in place.

(13) Tie the front suspension slings to the sideboards on the truck with type III nylon cord.

(14) Tie the center suspension slings to the sideboards on the truck with type III nylon cord.

Figure 7-20. Suspension slings installed and safetied (continued)

NOTE: The 1/2-inch tubular nylon webbing ties in steps 16, 17, and 18 must be routed under all the suspension slings. These ties serve as guides for the suspension slings.

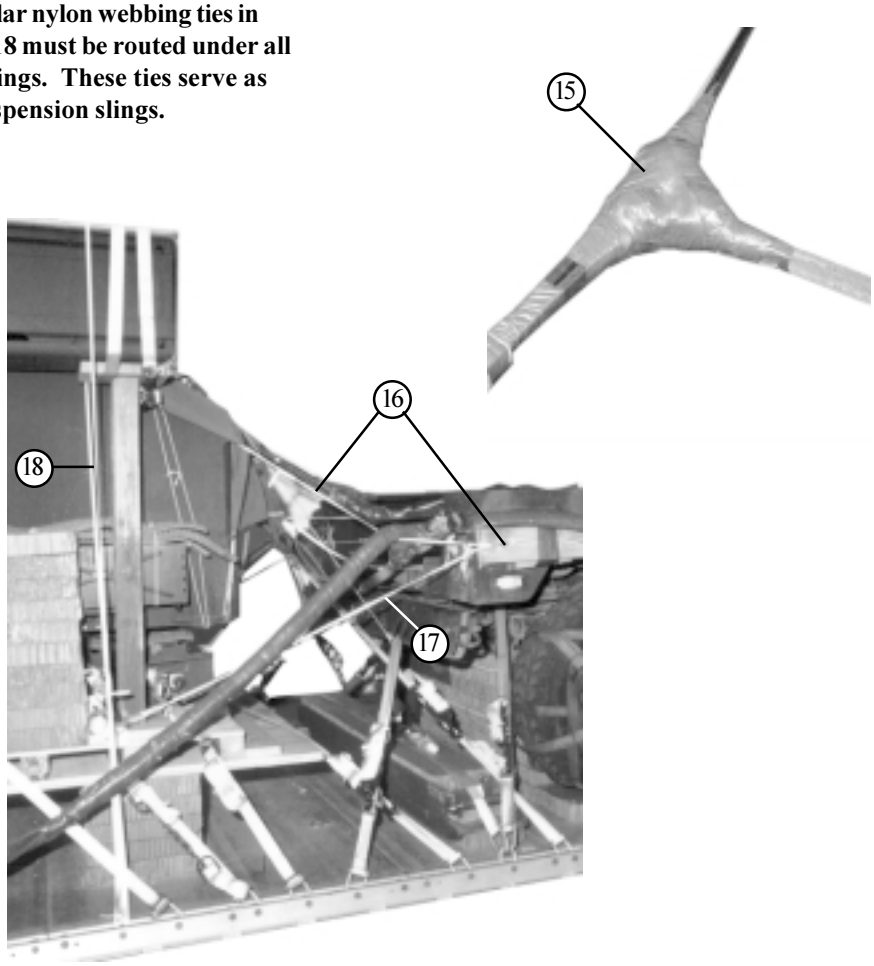

(15) Pad the 3-point link with cellulose wadding and tape.

(16) Route a length of 1/2-inch tubular nylon webbing from the 1/2-inch hole in the end of the right sideboard to the right, top, front lift provision. Repeat the procedure on the left side using the 1/2-inch hole in the left rear sideboard and the left, top, front lift provision.

(17) Route a length of 1/2-inch tubular nylon webbing from the 1/2-inch hole in the end of the right sideboard to the D-ring of the lashing going through the second hole in the strongback. Repeat the procedure on the left side using the 1/2-inch hole in the left rear sideboard and the D-ring of the lashing going through the second hole in the strongback.

(18) Route a length of 1/2-inch tubular nylon webbing from bushing 39, around the right weapon pod, and secure the webbing to bushing 39. Repeat the procedure on the left side using bushing 39A.

Figure 7-20. Suspension slings installed and safetied (continued)

7-14. Stowing Cargo Parachutes

Stow three G-11 cargo parachutes on this load. Build and install the parachute stowage platform as shown in Figure 7-21. Install the parachutes according to FM 10-500-2/TO 13C7-1-5 and as shown in Figure 7-22.

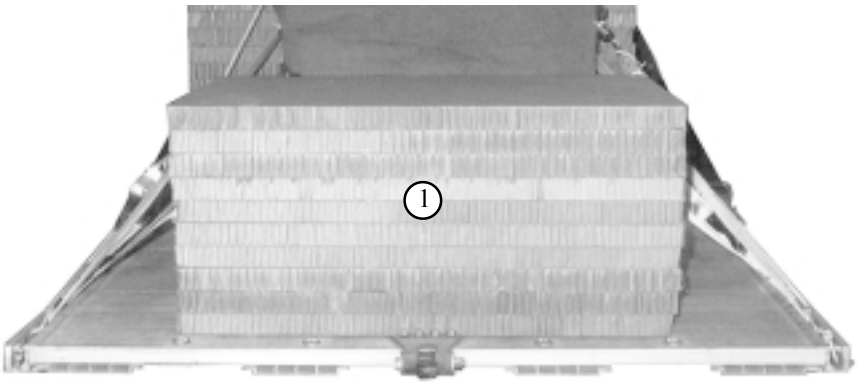

NOTES: 1. All measurements are given in inches.
2. This drawing is not to scale.

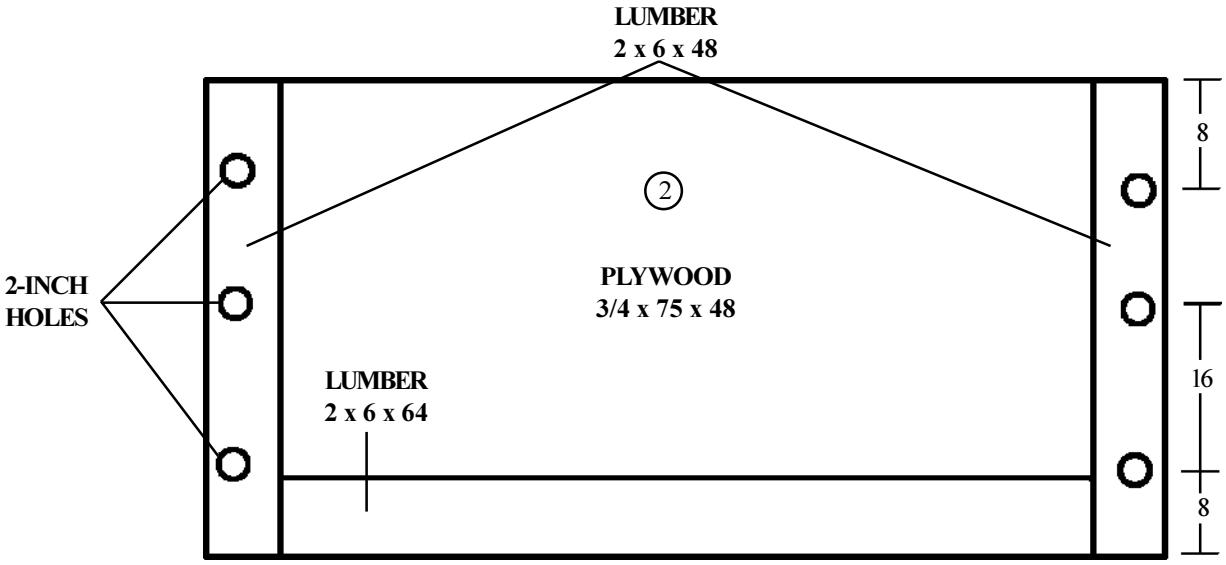

(1) Center ten pieces of 36- by 64-inch honeycomb against the rear of the strongback. Notch layers 6 and 7 to allow for the lashings. Glue the layers together.

(2) Build the parachute stowage platform with 3/4-inch plywood and 2- by 6-inch lumber as shown. Nail the plywood to the 2- by 6-inch lumber.

Figure 7-21. Parachute stowage platform built and installed

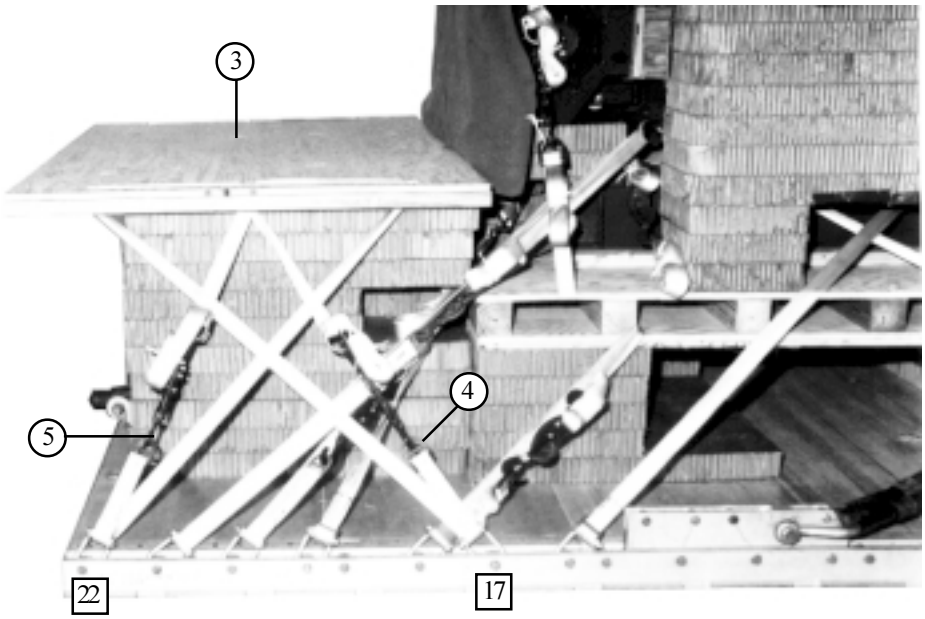

(3) Place the parachute stowage platform on the honeycomb so it overhangs the rear of the honeycomb by 10 inches.

(4) Lash the parachute stowage platform to clevises 17 and 17A through the center and rear holes on each side.

(5) Lash the parachute stowage platform to clevises 22 and 22A through the center and front holes on each side.

Figure 7-21. Parachute stowage platform built and installed (continued)

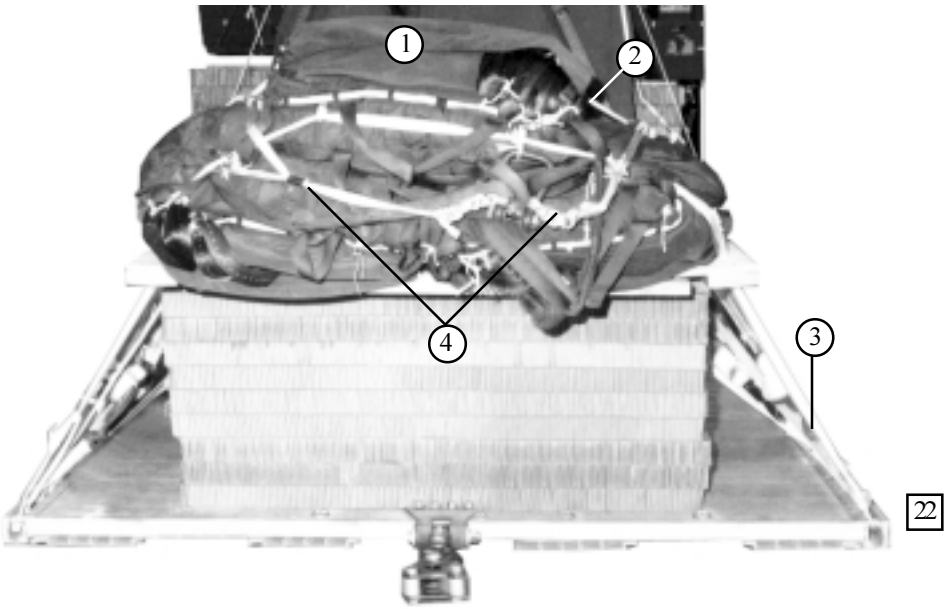

1. Prepare, install, and restrain three G-11 cargo parachutes according to FM 10-500-2/TO 13C7-1-5.
2. Tie the front parachute restraint strap to bushings 52 and 52A.
3. Tie the rear parachute restraint strap clevises to 22 and 22A.
4. Install the parachute release strap according to FM 10-500-2/TO 13C7-1-5.

Figure 7-22. Cargo parachutes installed

7-15. Installing Extraction System

Install the Extraction Force Transfer Coupling (EFTC) extraction system according to FM 10-500-2/TO 13C7-1-5 and as shown in Figure 7-23.

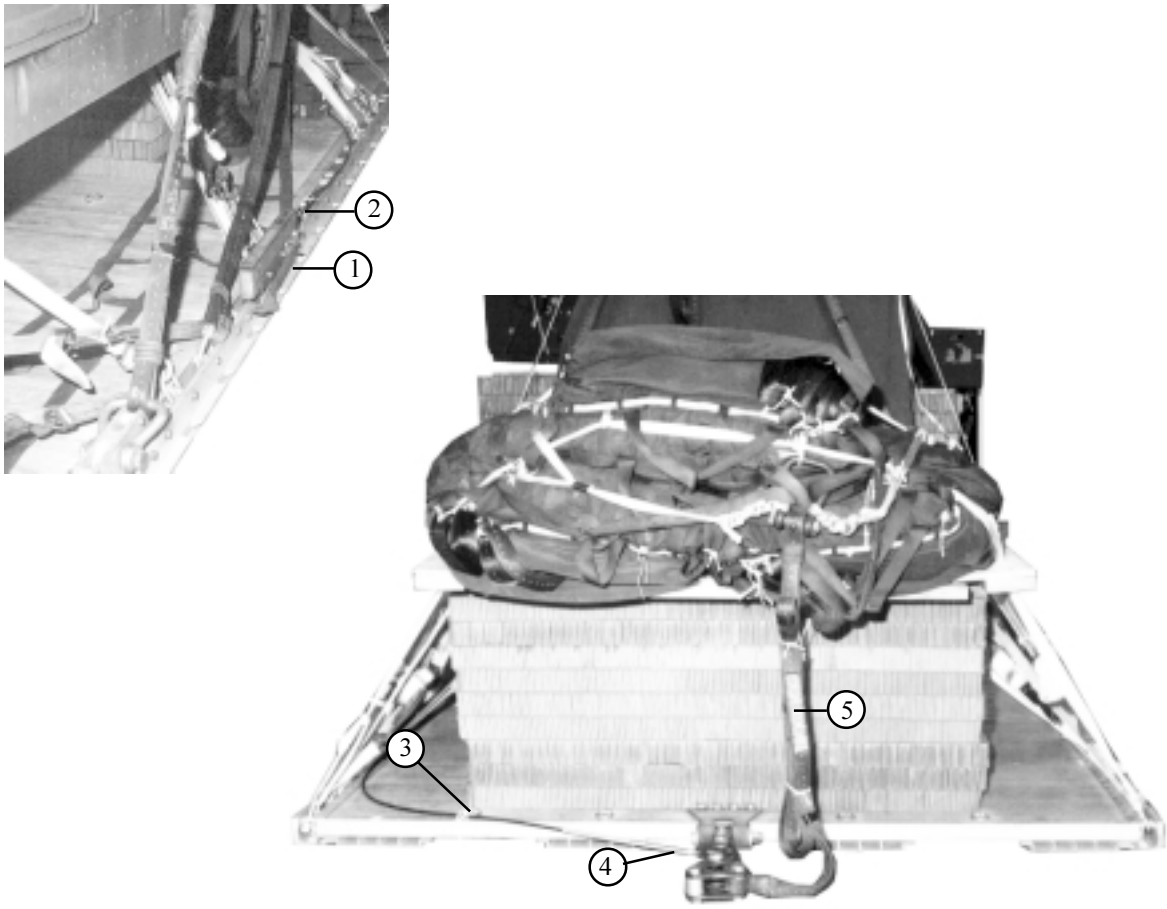

1. Attach the mounting brackets to the rear mounting holes in the left platform side rail.
2. Install a 28-foot cable to the actuator. Install the actuator to the brackets.
3. Safety the cable to points on the platform with type I, 1/4-inch cotton webbing.
4. Attach the latch assembly to the extraction bracket. Attach the cable to the latch assembly.
5. Install a 9-foot (2-loop), type XXVI nylon webbing sling as the deployment line.

Figure 7-23. EFTC installed

7-16. Installing Release System

Prepare and install an M1 cargo parachute release according to FM 10-500-2/TO 13C7-1-5 and as shown in Figure 7-24.

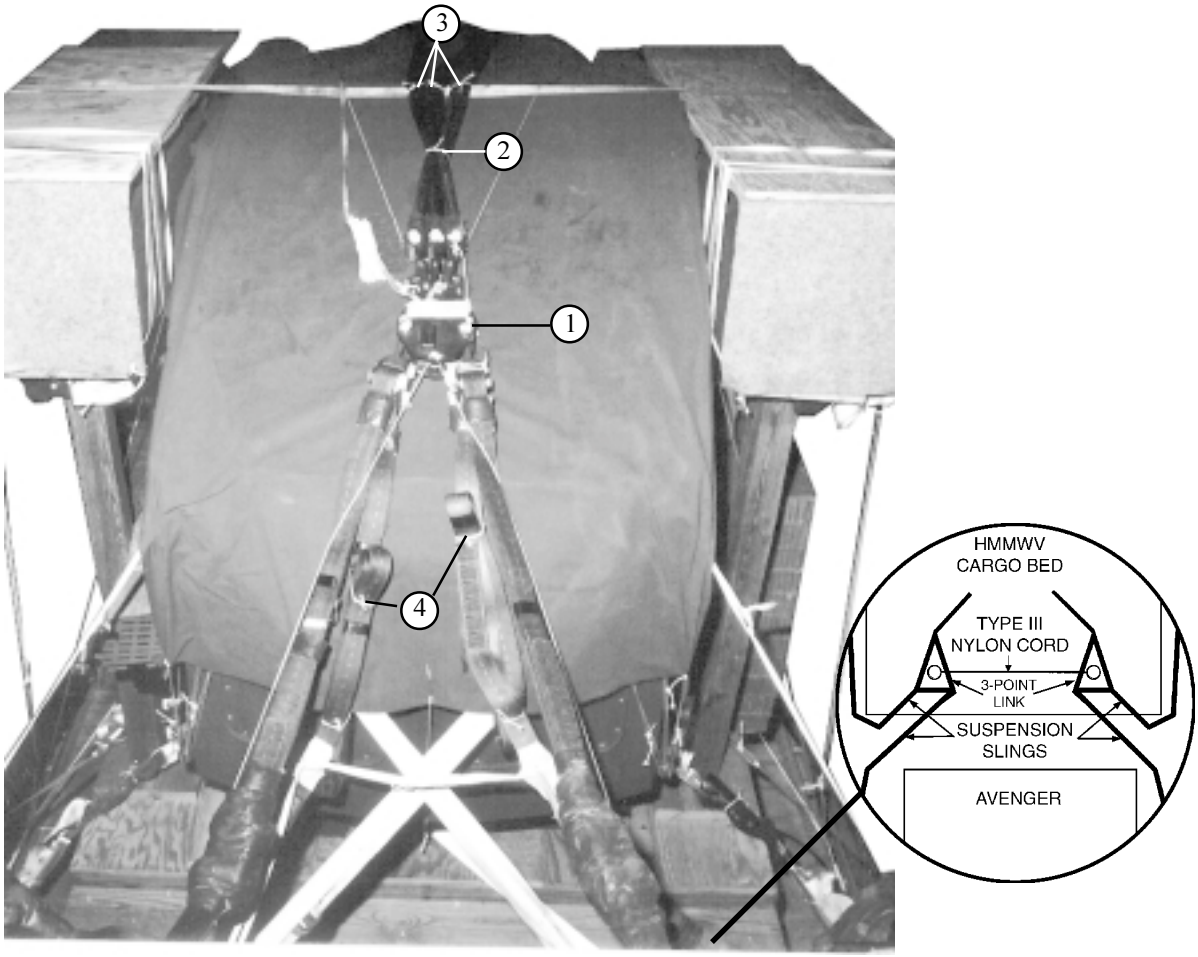

1. Prepare an M1 cargo parachute release andcenter it on the turret canopy. Attach it to the suspension slings and parachute risers, and tie it to convenient points on the load with type III nylon cord.
2. Tie the parachute riser extentions together with type I, 1/4-inch cotton webbing.
3. Tie each of the riser extentions to the lashing running across the top of the turret with type I, 1/4-inch cotton webbing.
4. S-fold the suspension slings and secure the folds with type I, 1/4-inch cotton webbing.
5. Safety tie the 3-point links, as close as possible, together towards the center of the platform with a length of type III nylon cord (see insert).

Figure 7-24. Release system installed

7-17. Placing Extraction Parachute

Select the extraction parachute and extraction line needed using the extraction line requirements table in FM 10-500-2/TO 13C7-1-5. Place the extraction parachute and extraction line on the load for installation in the aircraft.

7-18. Installing Provisions for Emergency Restraint

Select and install the provisions for the emergency aft restraints according to the emergency aft restraint requirements table in FM 10-500-2/TO 13C7-1-5.

7-19. Marking Rigged Load

Mark the rigged load according to FM 10-500-2/TO 13C7-1-5 and as shown in Figure 10-17. Complete Shipper's Declaration for Dangerous Goods and affix to the load. If the load varies from the one shown, the weight, height, center of balance (CB), tipoff curve, and parachute requirements must be recomputed.

7-20. Equipment Required

Use the equipment listed in Table 7-1 to rig the load shown in Figure 7-25.

CAUTION
Make the final rigger inspection required by FM 10-500-2/TO 13C7-1-5 before the load leaves the rigging site.

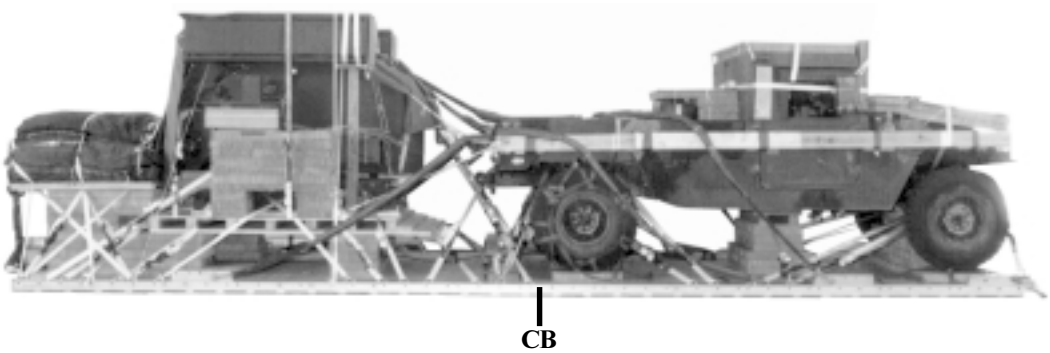

RIGGED LOAD DATA

Weight.....14,182 pounds

Maximum Weight.....15,750 pounds

Height.....95 inches

Width.....108 inches

Overall Length .....354 inches

Overhang: Front.....0 inches
Rear (EFTC).....18 inches

Center of Balance (CB)
(from front edge of the platform) .....176 inches

Extraction System.....EFTC

Figure 7-25. Avenger air defense weapon system with ECU and M1097A2 truck, rigged on a 28-foot type V platform for low-velocity airdrop

Table 7-1. Equipment required for rigging the Avenger air defense weapon system with ECU on M1097A2 truck on a 28-foot type V platform for low-velocity airdrop

National Stock Number	Item	Quantity
1670-00-162-4981	Adapter, coupling, EFTC	2
8040-00-273-8713	Adhesive paste, 1-gal.	As required
1670-01-035-6054	Bridle, extraction line, leaf (C-17 only)	1
	Clevis, suspension:	
4030-00-678-8562	3/4-inch (medium)	4
4030-00-090-5354	1-inch (large)	5
8305-00-242-3593	Cloth, cotton duck, 60-inches	As required
4020-00-240-2146	Cord, nylon, type III, 550-lb.	As required
1670-01-423-4102	Coupling, airdrop extraction force transfer, w/28-ft. cable	1
1670-00-360-0328	Cover, clevis	9
1670-00-360-0329	Cover, link assembly (type IV)	3
8135-00-664-6958	Cushioning material, packaging, cellulose wadding	As required
1670-01-344-0825	Drive off aid, Airdrop	1
8305-00-958-3685	Felt, 1/2-inch thick	As required
1670-01-183-2678	Leaf, extraction line (line bag) (add 2 for C-17)	2
	Line extraction:	
1670-01-062-6313	60-foot (3-loop), type XXVI (for C-130)	1
1670-01-107-7651	140-foot (3-loop), type XXVI (for C-141)	1
1670-01-107-7651	140-foot (3-loop), type XXVI, (for C-5 between fuselage stations 1427-1971)	1
1670-01-107-7651	140-foot (3-loop), type XXVI and	1
1670-01-062-6313	60-foot (3-loop), type XXVI, (for C-5 between fuselage stations 707-1426)	1
1670-01-107-7651	140-foot (3-loop), type XXVI (for C-17)	1
1670-01-064-4452	60-foot (1-loop), type XXVI (for C-17), (drogue line)	1
1670-00-783-5988	Link assembly, type IV (add 1 for C-17)	3
	Link assembly, two-point:	
5306-00-435-8994	Bolt, 1-inch diameter, 4-inches long (add 2 for C-5)	4
5310-00-232-5165	Nut, 1-inch (add 2 for C-5)	4
1670-00-003-1954	Plate, side, 3 3/4-inch (add 2 for C-5)	4
5365-00-007-3414	Spacer, large (add 2 for C-5)	4
1670-01-307-0155	Link, assembly, coupling, three-point	2
	Lumber:	
5510-00-220-6146	2- by 4- by 73-inch	2
5510-00-220-6148	2- by 6- by 13-inch	2
	2- by 6- by 16-inch	2
	2- by 6- by 48-inch	2
	2- by 6- by 56-inch	2
	2- by 6- by 64-inch	1
	2- by 6- by 72-inch	1
	2- by 6- by 176-inch	2
5510-00-220-6246	2- by 8- by 18-inch	2
5510-00-220-6250	2- by 12- by 12-inch	4

Table 7-1. Equipment required for rigging the Avenger air defense weapon system with ECU on M1097A2 truck on a 28-foot type V platform for low-velocity airdrop (continued)

National Stock Number	Item	Quantity
5510-00-220-6274	Lumber:	
	4- by 4- by 8 1/2-inch	2
	4- by 4- by 43-inch	2
	4- by 4- by 50-inch	2
	4- by 4- by 72-inch	7
5315-00-010-4659	Nail, steel, common, 8D	As required
5315-00-753-3885	Nail, steel, common, 16D	As required
1670-00-753-3928	Pad, energy-dissipating (honeycomb)	
	3- by 36- by 96-inches	30 sheets
	5 1/2- by 10-inch	(10)
	7- by 25-inch	(1)
	8- by 16-inch	(3)
	8- by 27-inch	(1)
	10- by 10-inch	(5)
	10- by 24-inch	(1)
	10- by 80-inch	(1)
	11- by 16-inch	(1)
	11- by 24-inch	(3)
	12- by 12-inch	(6)
	12- by 16-inch	(3)
	12- by 18-inch	(10)
	12- by 24-inch	(1)
	12- by 28-inch	(1)
	12- by 41-inch	(7)
	12- by 82-inch	(2)
	13- by 40-inch	(1)
	14- by 32-inch	(3)
	16- by 16-inch	(12)
	16- by 26-inch	(1)
	16- by 32-inch	(1)
	16- by 72-inch	(1)
	18- by 18-inch	(8)
	18- by 38-inch	(2)
	18- by 40-inch	(8)
	18- by 43-inch	(4)
	20- by 24-inch	(6)
	23- by 83-inch	(1)
	24- by 54-inch	(8)
	24- by 80-inch	(2)
	26- by 43-inch	(3)
	28- by 32-inch	(1)
	36- by 64-inch	(10)

Table 7-1. Equipment required for rigging the Avenger air defense weapon system with ECU on M1097A2 truck on a 28-foot type V platform for low-velocity airdrop (continued)

National Stock Number	Item	Quantity
1670-00-753-3928	Pad, energy-dissipating (honeycomb)	
	36- by 72-inch	(1)
	36- by 80-inch	(1)
	36- by 82-inch	(2)
1670-01-016-7841	Parachute, cargo, G-11	3
	Parachute, cargo, extraction:	
1670-01-063-3716	22-ft.	1
1670-01-063-3715	15-ft. (C-17 only)	1
	Platform, airdrop, type V, 28-ft:	
1670-01-162-2372	Clevis assembly (type V)	(54)
1670-01-162-2376	Extraction bracket assembly	(1)
1670-01-247-2389	Link, suspension bracket, type V	(4)
1670-01-162-2381	Tandem link assembly (Multipurpose link)	(2)
	Plywood:	
5530-00-129-7721	1/4-inch:	
	9 1/2- by 24-inch	1
5530-00-129-7777	1/2-inch	
	8- by 19-inch	1
	8- by 21-inch	1
	16- by 26-inch	1
5530-00-128-4981	3/4-inch:	8 sheets
	8- by 8-inch	(2)
	8- by 27-inch	(1)
	10- by 20-inch	(1)
	12- by 24-inch	(1)
	14- by 22-inch	(1)
	18- by 43-inch	(2)
	18- by 48-inch	(2)
	20- by 24-inch	(2)
	24- by 54-inch	(2)
	24- by 84-inch	(1)
	24- by 96-inch	(2)
	39- by 80-inch	(1)
	44- by 48-inch	(1)
	48- by 75-inch	(1)
	48- by 84-inch	(1)
	48- by 96-inch	(2)
1670-01-097-8816	Release, cargo parachute, M-1	1

Table 7-1. Equipment required for rigging the Avenger air defense weapon system with ECU on M1097A2 truck on a 28-foot type V platform for low-velocity airdrop (continued)

National Stock Number	Item	Quantity
	Sling, cargo, airdrop:	
	For deployment line:	
1670-01-062-6304	9-ft. (2-loop), type XXVI	1
	For riser extentions:	
1670-01-062-6302	20-ft. (2-loop), type XXVI	6
	For lifting:	
1670-01-062-6304	9-ft. (2-loop), type XXVI	2
1670-01-062-6303	12-ft. (2-loop), type XXVI	2
1670-01-063-7760	11-ft. (2-loop), type XXVI	2
	For suspension slings:	
1670-01-062-6301	3-ft. (2-loop), type XXVI	2
1670-01-062-6304	9-ft. (2-loop), type XXVI	2
1670-01-063-7760	11-ft. (2-loop), type XXVI	2
1670-01-062-6303	12-ft. (2-loop), type XXVI	2
1670-01-063-7761	16-ft. (2-loop), type XXVI	2
5340-00-040-8219	Strap, parachute, release, multi-knife	2
7501-00-266-5016	Tape, adhesive, 2-inch	As required
1670-00-937-0271	Tiedown assembly, 15-ft.	63
TBD	Towplate release mechanism (H-block) (C-17 only)	1
	Webbing:	
8305-00-268-2411	Cotton, 1/4-inch, type I	As required
8305-00-082-5752	Nylon, tubular, 1/2-inch	As required
8305-00-263-3598	Nylon, type VIII	As required

GLOSSARY

ACB	attitude contrl bar
AFB	Air Force base
AFJMAN	Air Force joint manual
AFR	Air Force regulation
AFTO	Air Force technical order
attn	attention
CB	center of balance
d	penny
DA	Department of the Army
DD	Department of Defense
diam	diameter
ECU	environmental control unit
EFTA	extraction force transfer actuator
EFTC	extraction force transfer coupling
FM	field manual
ft	foot
GPS	Global Positioning System
HMMWV	high-mobility, multipurpose wheeled vehicle
HQ	headquarters
in	inch
LAPE	low-altitude parachute-extraction
LAPES	low-altitude parachute-extraction system
lb	pound
LRF	laser range finder
lv	low-velocity
no	number
NSN	national stock number
PEFTC	extractor force transfer coupling (platform)
PPU	primary power unit
SL/CS	static line/connector strap
TM	technical manual
TO	technical order
TRADOC	United States Army Training and Doctrine Command
US	United States
w	with
yd	yard

REFERENCES

***AFJMAN 24-204/TM38-250/ NAVSUP PUB 505/MCO P 4030.19F/ DLAM 4145.3**	Packaging and Materials Handling: Preparing Hazardous Materials for Military Air Shipment. November 1994.
****FM 10-500-2/To 13C7-1-5**	Airdrop of Supplies and Equipment: Rigging Airdrop Platforms. November 1990.
TM 5-2410-227-15	Operator's Organizational, Direct Support, General Support, and Depot Maintenance Manual: Tractor, Full Tracked, DED, 7500 lb Drawbar Pull Tractor w/ Dozer Blade, Backrip Scarifier (J. I. Case Model M450) (FSN 2410-935-0714) and Loader, Scoop Type w/ Fork Lift Attachment (J. I. Case Model M-450-L) (FSN 3805-131-462). December 1969.
TM 5-2410-231-10	Operator's Manual: Tractor, Full Tracked, Low Speed, DED, 16,000 to 24,900 lb Drawbar Pull, 60 Inch Min Gage, Sectionalized, Air Transportable (Caerpillar Model D5) (FSN 2410-828-6865). August 1968.
TM 10-1670-208-20&P	Organizational Maintenance Manual Including Repair Parts and Special Tools List for Platforms, Types II Modular and LAPES/Airdrop Modular. August 1978.
TM 10-1670-268-20&P	Organizational Maintenance Manual With Repair Parts and Special Tools List: Type V Platform. June 1986.

***AFJMAN24-204/TM38-250 has superseded AFR 71-4/TM 38-250 (15 January 1988). Change 3 reflects this change. The basic manual still references the superseded publication. You may wish to make pen and ink changes to update the old reference citations accordingly.**

****FM 10-500-2/TO 13C7-1-5 has superseded FM 10-500/TO 13C7-1-5 (15 January 1988). Change 3 reflects this change. The basic manual still references the superseded publication. You may wish to make pen and ink changes to update the old reference citations accordingly.**

***TM 10-1670-277-23&P/ TO 13C5-28-2/NAVAIR 13-1-30**	Unit and Intermediate DS Maintenance Manual Including Repair Parts and Special Tools List for Parachute, 28-foot Diam, Extraction. October 1990.
***TM 10-1670-278-23&P/ TO 13C5-26-2/NAVAIR 13-1-27/ TM 01109C-23&P/1**	Unit and Intermediate DS Maintenance Manual Including Repair Parts and Special Tools List for Parachute, 15-foot Diam, Extraction. November 1989.
***TM 10-1670-280-23&P/ TO 13C5-31-2/NAVAIR 13-1-31**	Unit and Intermediate DS Maintenance Manual Including Repair Parts and Special Tools List for Parachute, Cargo Type, G-11A, G-11B, and G-11C. August 1991.
***TM 10-1670-286-20/ TO 13C5-2-41**	Unit Maintenance Manual for Sling/Extraction Line Panel (Including Stowing Procedures). April 1986.
AFTO Form 22	Technical Order Publication Improvement Report
DA Form 2028	Recommended Changes to Publication and Blank Forms. February 1974.
****Shippers Declaration for Dangerous Goods**	Locally procured form.

***TM 10-1670-277-23&P, TM 10-1670-278-23&P, and TM 10-1670-280-23&P has superseded TM 10-1670-215-20. Change 3 reflects this change. The basic manual still references this superseded publication. You may wish to make pen and ink changes to update the old reference citations accordingly.**

****Shippers Declaration for Dangerous Goods has superseded DD Form 1387-2 (February 1982). Change 3 reflects this change. The basic manual still references the superseded publication. You may wish to make pen and ink changes to update the old reference citations accordingly.**