Chapter 3

Rigging 500-Gallon Drums with the 350-GPM Wheel-Mounted POL Pumping Assembly, Filter/Separator Assembly, and Hose Box

SECTION I - RIGGING THREE 500-GALLON DRUMS

DESCRIPTION OF LOAD

3-1. The three collapsible drums are rigged on a 24-foot platform with four G-11 cargo parachutes. Each drum is filled with a maximum of 432 gallons of liquid. When empty, each drum weighs 250 pounds and is 62 inches long and 53 inches in diameter. The 350-GPM pump with filter/separator and hose box are accompanying loads. The total rigged load has a maximum rigged weight of 21,000 pounds with a width of 108 inches and a length of 324 inches. It has an overhang of 18 inches in the front and 18 inches in the rear.

Notes:
1. For drums filled with a liquid other than water, use Table 1-1 to recompute the weight.
2. If the load varies from the one shown, the weight, height, CB, tipoff curve, and parachute requirements must be recomputed.
3. Do not pressurize drums with air.

PREPARING PLATFORM

3-2. Prepare a 24-foot type V airdrop platform using two tandem links, eight suspension brackets, and 48 tie-down clevises as shown in Figure 3-1.

Notes:
1. The nose bumper may or may not be installed.
2. Measurements given in this section are from the front edge of the platform, NOT from the front edge of the nose bumper.

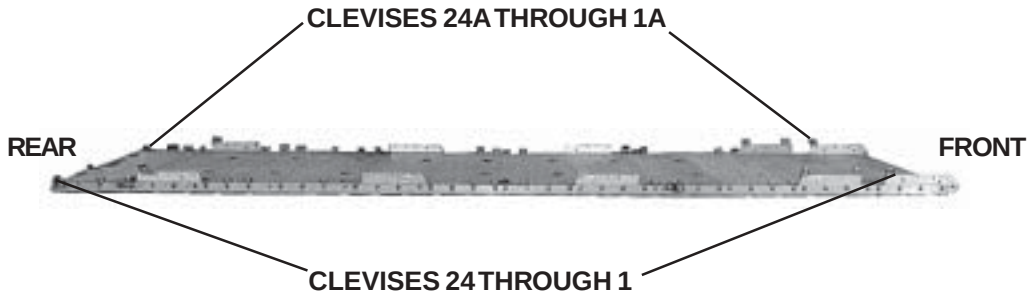

Steps:

1. Inspect, or assemble and inspect, the platform as outlined in TM 10-1670-268-20&P/TO 13C7-52-22.
2. Install a tandem link on the front of each platform side rail using holes 1, 2, and 3.
3. Install a suspension bracket to bushings 6, 7, and 8 on each platform side rail.
4. Install a suspension bracket to bushings 18, 19, and 20 on each platform side rail.
5. Install a suspension bracket to bushings 29, 30, and 31 on each platform side rail.
6. Install a suspension bracket to bushings 41, 42, and 43 on each platform side rail.
7. Install a tie-down clevis to bushing 4 of each tandem link.
8. Install a tie-down clevis to bushings 1 and 4 of each first suspension bracket.
9. Install a double clevis to bushing 4 of the fourth suspension bracket.
10. Starting at the front of each platform side rail, install a tie-down clevis to the bushings bolted to holes 9, 10, 15 (triple), 16, 23, 24, 25, 26, 33, 34, 38, 39, 40, 44 (triple), 45, 46, and 48 (double).
11. Starting at the front of the platform, number the clevises bolted to the right side from 1 through 24 and those bolted to the left side from 1A through 24A.
12. Number the clevis on bushing 48 as clevis 24 and 24A and the doubled clevis as 23 and 23A.

Figure 3-1. Platform Prepared

PREPARING HONEYCOMB

3-3. Build honeycomb stack as shown in Figures 3-2 and 3-3.

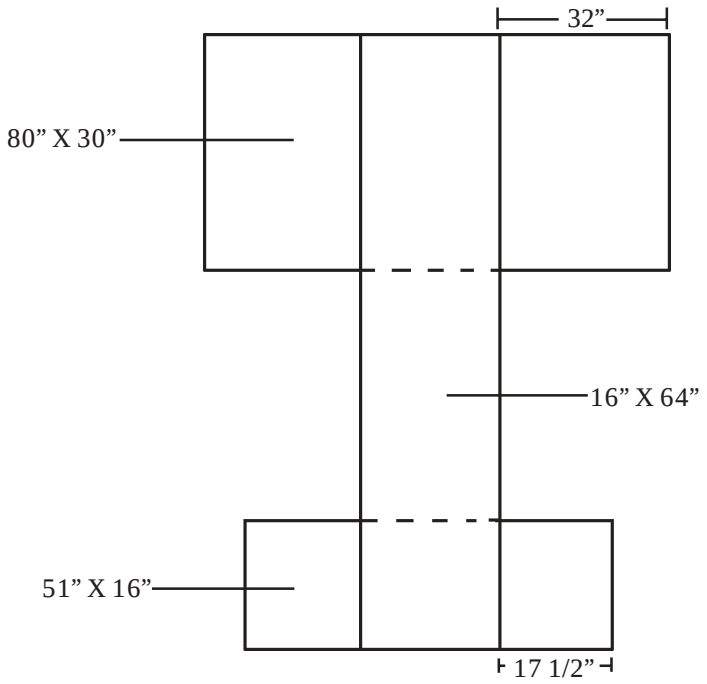

Stack Number	Pieces	Width (Inches)	Length (Inches)	Material	Instructions
1	1	80	30	Honeycomb	Position the honeycomb on the floor.
	1	16	64	Honeycomb	Center and glue the honeycomb on top of the 80- by 30-inch piece of honeycomb.
	1	51	16	Honeycomb	Center and glue the honeycomb under the 16- by 64-inch piece of honeycomb.

Figure 3-2. Honeycomb Stack 1 Prepared

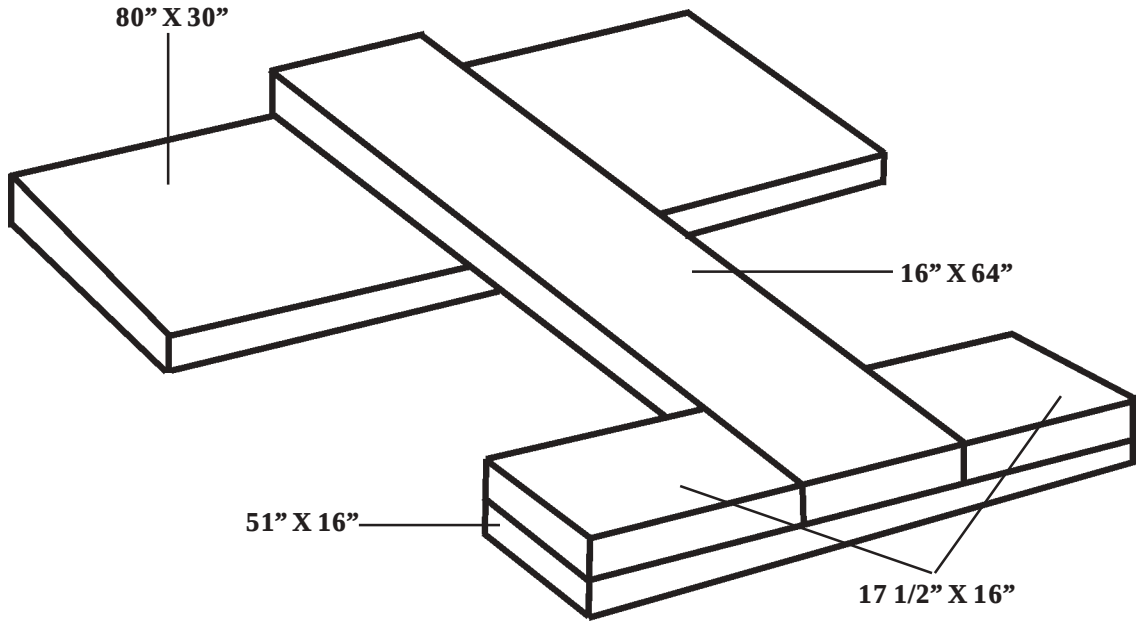

Stack Number	Pieces	Width (Inches)	Length (Inches)	Material	Instructions
1	2	17 1/2	16	Honeycomb	Position and glue the honeycomb pieces on top of the 51- by 16-inch piece of honeycomb and on each side of the 16- by 64-inch piece of honeycomb.

Figure 3-2. Honeycomb Stack 1 Prepared (continued)

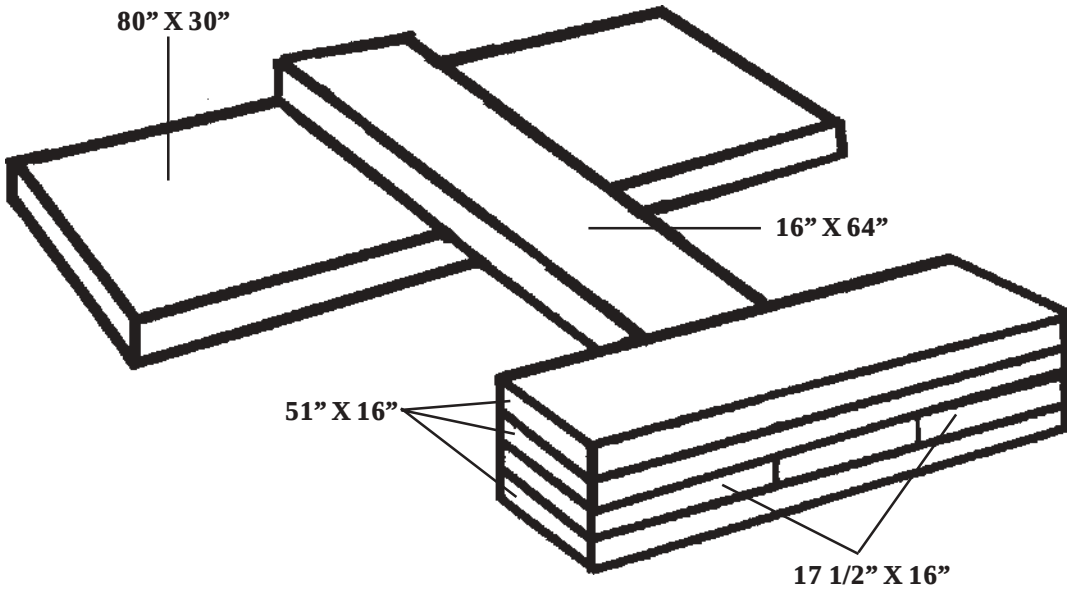

Stack Number	Pieces	Width (Inches)	Length (Inches)	Material	Instructions
1	2	51	16	Honeycomb	Position and glue the honeycomb pieces on top of the 17 1/2- by 16-inch piece of honeycomb .

Figure 3-2. Honeycomb Stack 1 Prepared (continued)

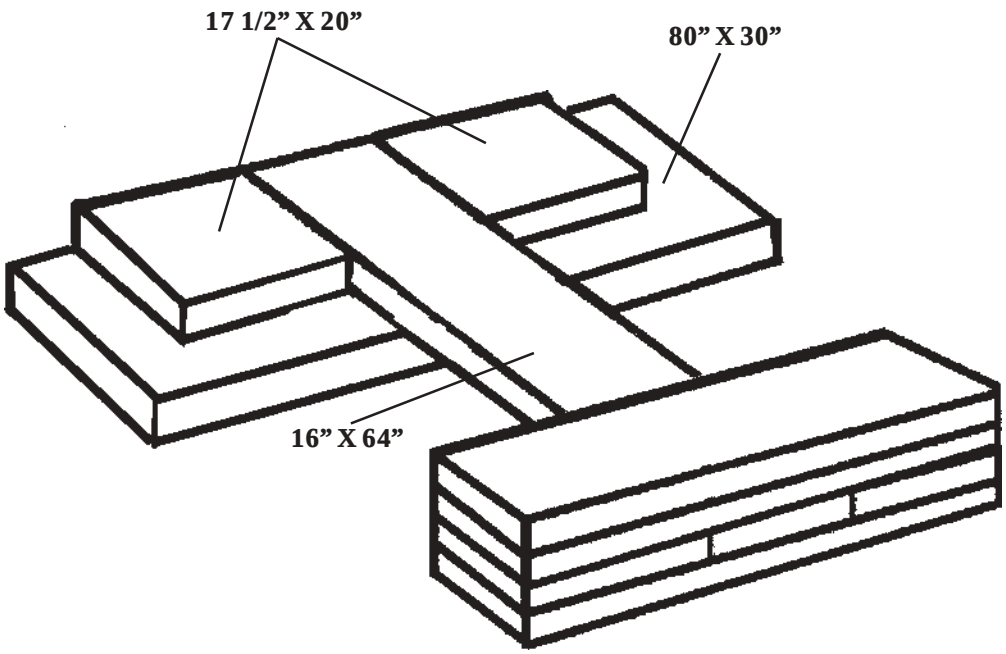

Stack Number	Pieces	Width (Inches)	Length (Inches)	Material	Instructions
1	2	17 1/2	20	Honeycomb	Position and glue the honeycomb pieces flush with the rear and on top of the 80- by 30-inch piece of honeycomb on each side of the 16- by 64-inch piece of honeycomb.

Figure 3-2. Honeycomb Stack 1 Prepared (continued)

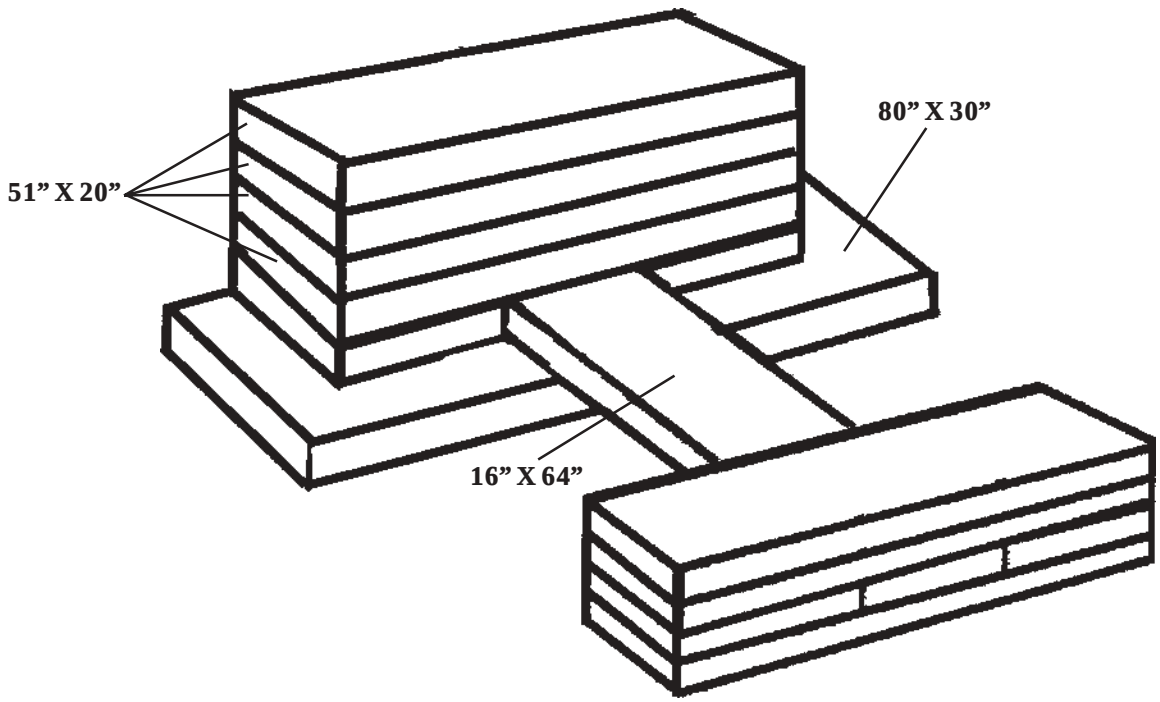

Stack Number	Pieces	Width (Inches)	Length (Inches)	Material	Instructions
1	4	51	20	Honeycomb	Position and glue the honeycomb pieces on top of the 17 1/2- by 20-inch piece of honeycomb .

Figure 3-2. Honeycomb Stack 1 Prepared (continued)

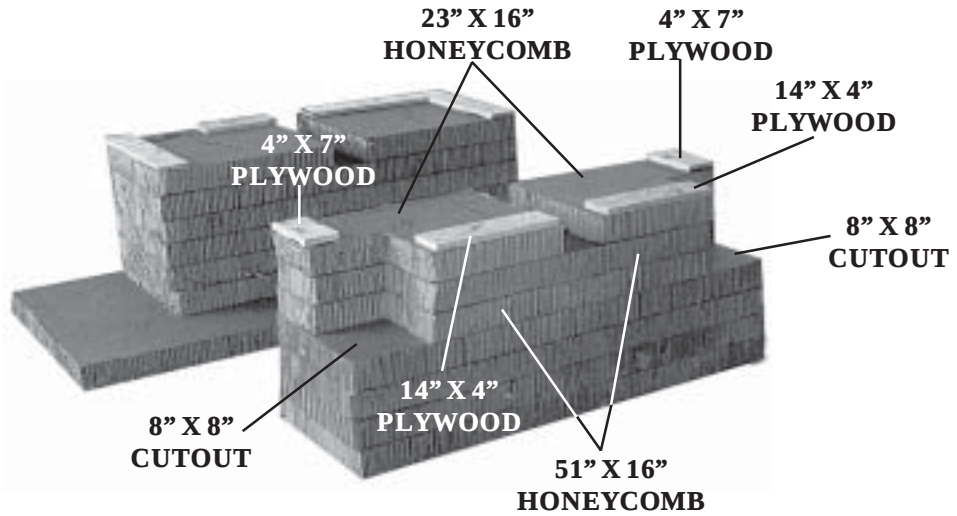

Stack Number	Pieces	Width (Inches)	Length (Inches)	Material	Instructions
1	2	51	16	Honeycomb	Cut an 8- by 8-inch cutout on each piece of honeycomb. Position and glue the two 51- by 16-inch pieces with cutouts on top of the 51- by 16-inch pieces of honeycomb.
	2	23	16	Honeycomb	Cut an 8- by 8-inch cutout on each piece of honeycomb. Position the pieces on top of the 51- by 16-inch pieces. Align the cutouts and glue.
	2	4	7	3/4-in Plywood	Center and glue the plywood on the sides of the 23- by 16-inch pieces of honeycomb.
	2	14	4	3/4-in Plywood	Center and glue the plywood on the front edge of the 23- by 16-inch pieces of honeycomb.

Figure 3-2. Honeycomb Stack 1 Prepared (continued)

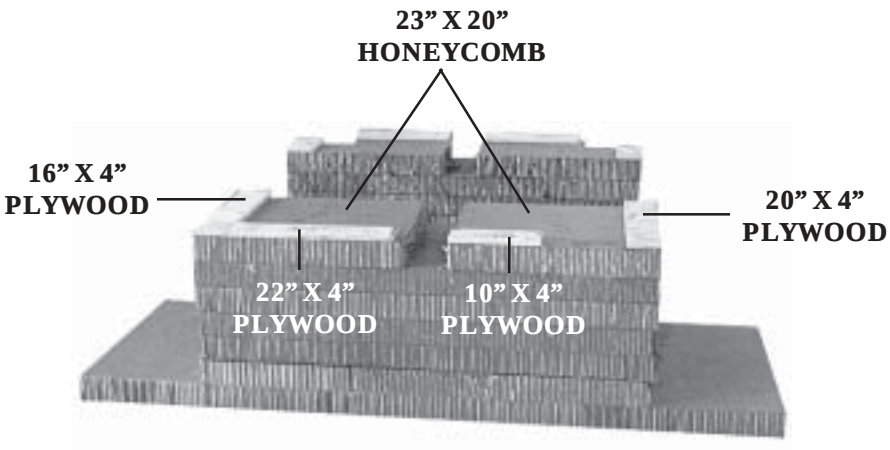

Stack Number	Pieces	Width (Inches)	Length (Inches)	Material	Instructions
1	2	23	20	Honeycomb	Position and glue the two 23- by 20-inch pieces of honeycomb on top of the 51- by 20-inch pieces of honeycomb aligning the outside edges.
	1	4	20	3/4-in Plywood	Position and glue the plywood on the right outside edge of the right 23- by 20-inch piece of honeycomb.
	1	10	4	3/4-in Plywood	Position and glue the plywood on the left rear edge of the right 23- by 20-inch piece of honeycomb.
	1	22	4	3/4-in Plywood	Position and glue the plywood on the rear edge of the left 23- by 20-inch piece of honeycomb.
	1	4	16	3/4-in Plywood	Position and glue the plywood on the left outside edge of the left 23- by 20-inch piece of honeycomb.

Figure 3-2. Honeycomb Stack 1 Prepared (continued)

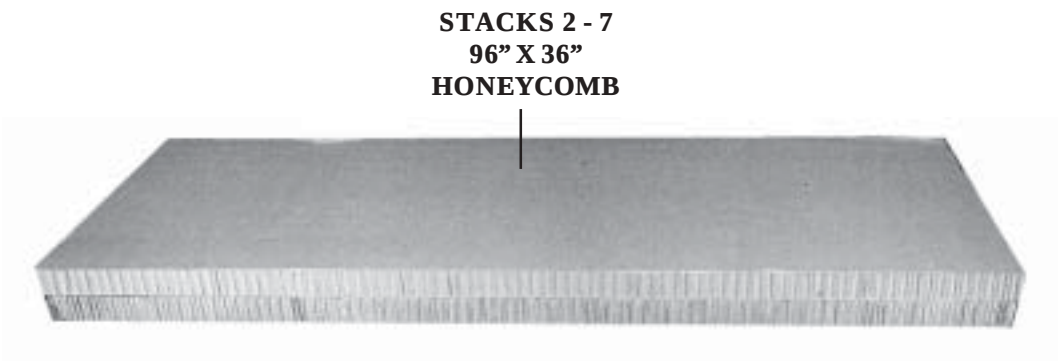

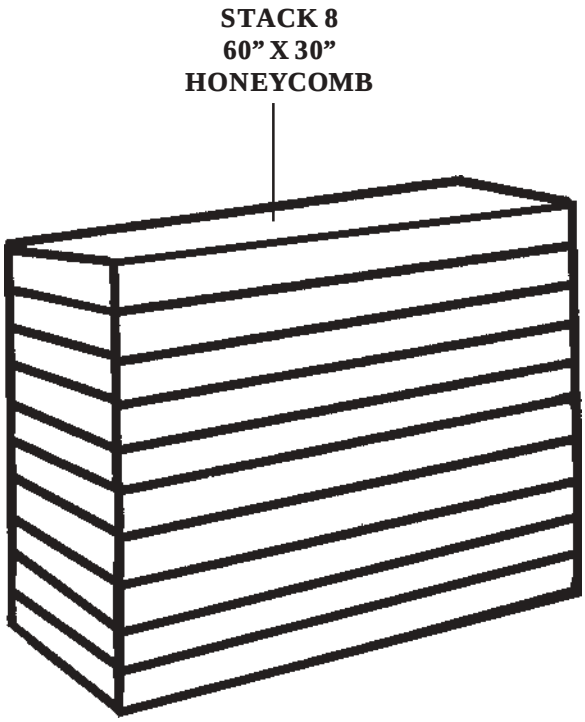

Stack Number	Pieces	Width (Inches)	Length (Inches)	Material	Instructions
2 - 7	2	96	36	Honeycomb	Glue layers together .
8	10	60	30	Honeycomb	Glue layers together .

Figure 3-3. Honeycomb Stacks 2 Through 8 Prepared

POSITIONING HONEYCOMB STACKS

3-4. Position honeycomb stacks as shown in Figure 3-4.

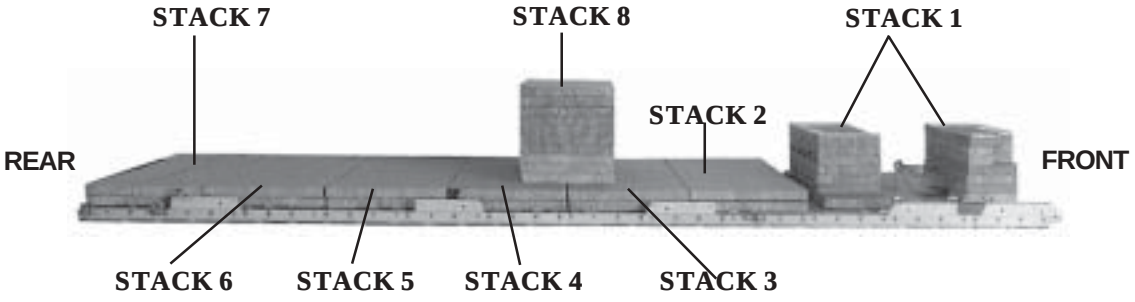

1. Center stack 1 on the front edge of the platform.
2. Center stack 7 on the rear edge of the platform.
3. Place stack 6 against and in front of stack 7.
4. Place stack 5 against and in front of stack 6.
5. Place stack 4 against and in front of stack 5.
6. Place stack 3 against and in front of stack 4.
7. Place stack 2 against and in front of stack 3.
8. Center stack eight 144 inches from the front edge of the platform.

Figure 3-4. Honeycomb Stacks Positioned

BUILDING THE EQUIPMENT HOSE BOX

3-5. Build the equipment hose box as shown in Figure 3-5.

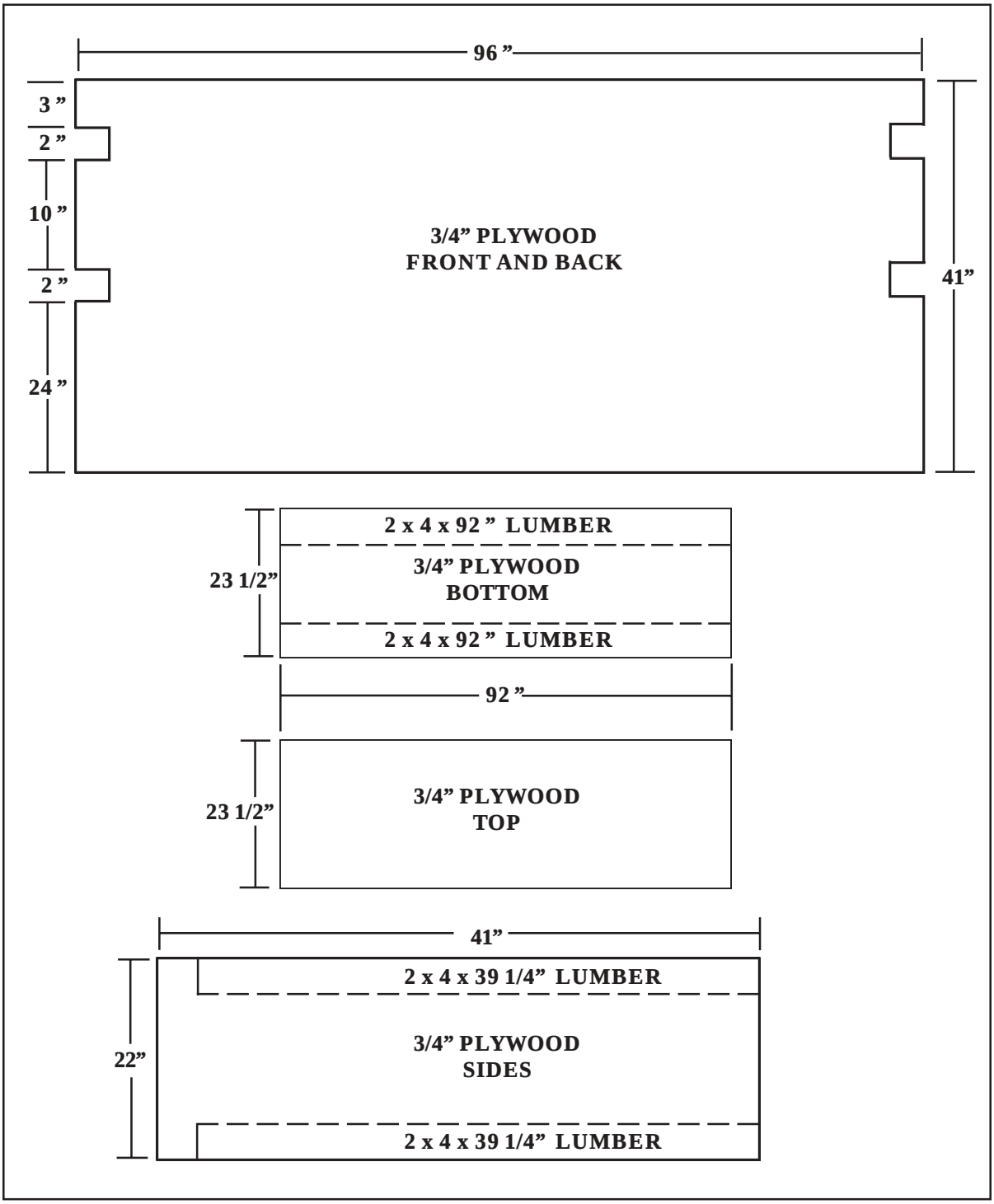

Figure 3-5. Equipment Hose Box Built

POSITIONING EQUIPMENT HOSE BOX

3-6. Position the equipment hose box on the platform as shown in Figure 3-6.

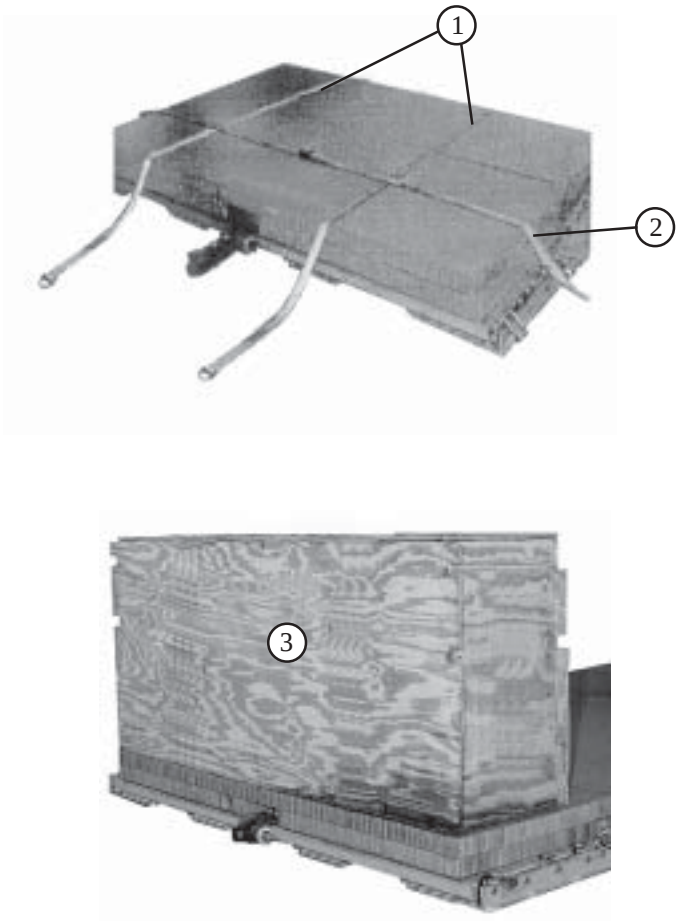

1. Position two 15- foot lashings across honeycomb stack 7 approximately 16 inches from the outside edges.
2. Center a 30-foot lashing lengthwise across honeycomb stack 7.
3. Position the equipment hose box on the rear edge of the platform.

Figure 3-6. Equipment Hose Box Positioned on Platform

STORING EQUIPMENT IN EQUIPMENT HOSE BOX

3-7. Store equipment in the equipment hose box on the platform as shown in Figure 3-7.

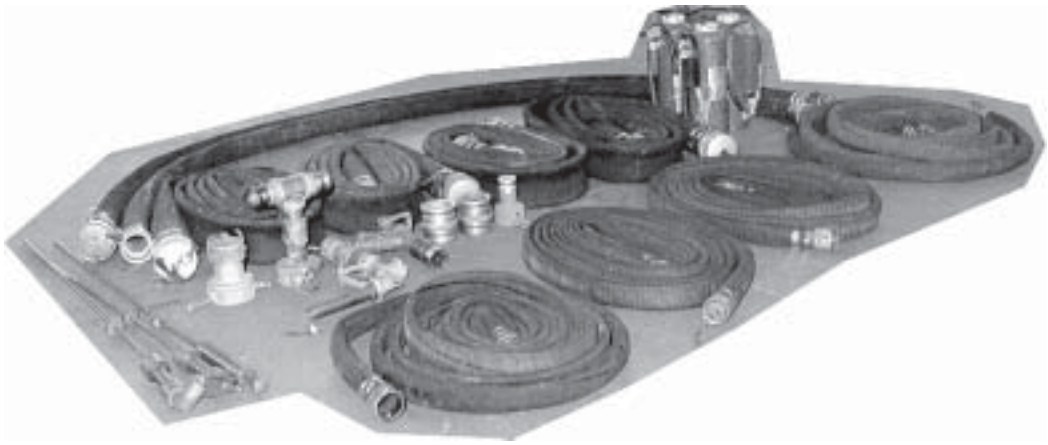

Item Description	Quantity
25-foot, 4-inch hose	4
Aircraft nozzle	1
Elbow coupler	1
2-inch to 3-inch adapter	2
10-foot, 3-inch hose	2
3-inch to 4-inch adapter	2
4-inch to 2-inch reducer	1
WYE adapter	1
50-foot, 2-inch hose	4
Open port nozzle	1
Grounding rod	3

1. Place a 91- by 23-inch piece of honeycomb in the bottom of the equipment hose box.
2. Wrap all metal fittings in cellulose wadding. Place all items in the equipment hose box.
3. Secure the equipment hose box top with eightpenny nails. Secure the equipment hose box with lashings installed in Figure 3-6.

Figure 3-7. Equipment Hose Box Positioned on Platform

LASHING EQUIPMENT HOSE BOX TO PLATFORM

3-8. Lash the equipment hose box to the platform as shown in Figures 3-8 and 3-9.

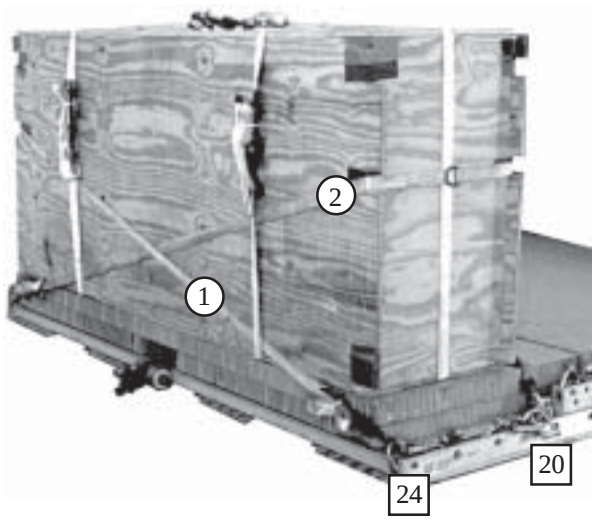

Lashing Number	Tie-down Clevis Number	Instructions
1	24 and 20	Route a 30-foot lashing from clevis 24 around the rear of the equipment hose box, through the left bottom notches of the box to clevis 20.
2	24A and 20A	Route a 30-foot lashing from clevis 24A around the rear of the equipment hose box, through the right bottom notches of the box to clevis 20A.

Figure 3-8. Lashings 1 and 2 Installed

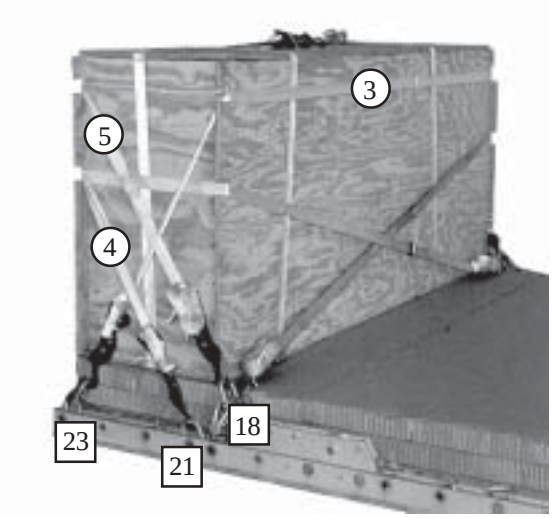

Lashing Number	Tie-down Clevis Number	Instructions
3	23 and 23A	Route a 15-foot lashing through its own D-ring on clevis 23A, around the front top cutouts and load bind on clevis 23.
4	21 and 21A	Route a 15-foot lashing through its own D-ring on clevis 21A, around the rear bottom cutouts and load bind on clevis 21.
5	18 and 18A	Route a 30-foot lashing through the rear top notches of the equipment hose box. Ensure the lashings are routed under the load binders on the rear of the box. Load bind to clevises 18 and 18A.

Figure 3-9. Lashings 3 through 5 Installed

PREPARING AND POSITIONING FUEL SEPARATOR

3-9. Prepare and position the fuel separator as shown in Figure 3-10.

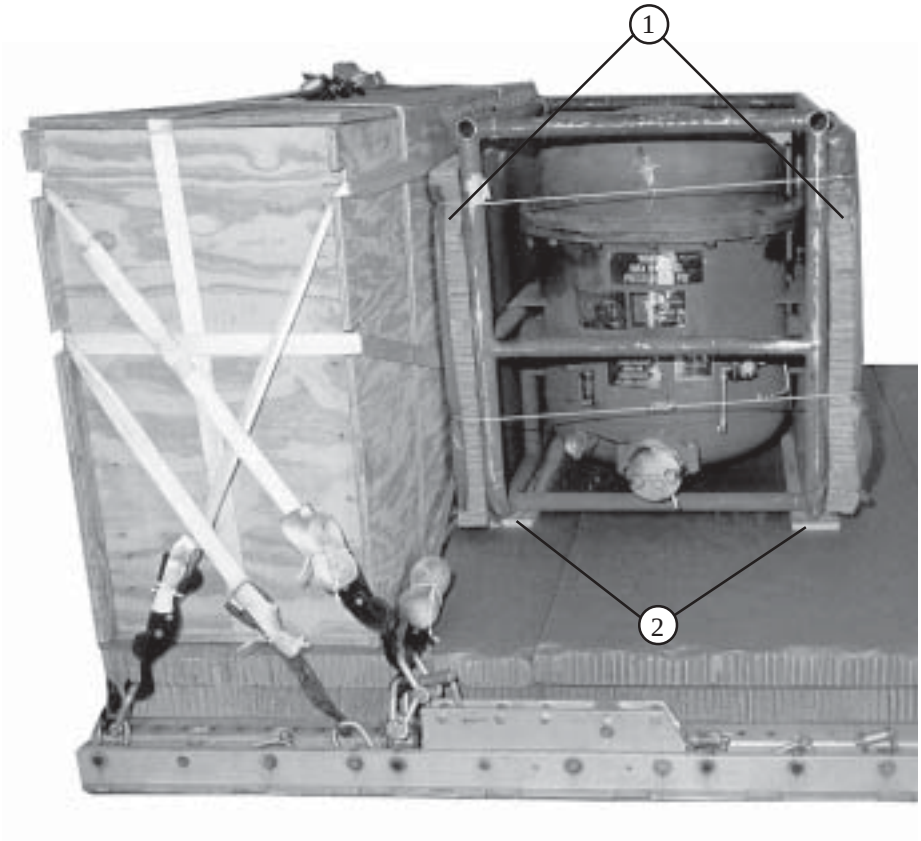

1. Secure a 49- by 41-inch piece of honeycomb to the front and rear of the separator with type III nylon cord. Secure a 64- by 33-inch piece of honeycomb to the top of the separator with type III nylon cord (not shown).

2. Center the separator against and in front of the equipment hose box. Place a 3/4- by 4 3/4-by 36 1/2-inch piece of plywood under each frame rail.

Figure 3-10. Fuel Separator Prepared and Positioned

LASHING FUEL SEPARATOR TO PLATFORM

3-10. Lash the fuel separator to the platform as shown in Figure 3-11.

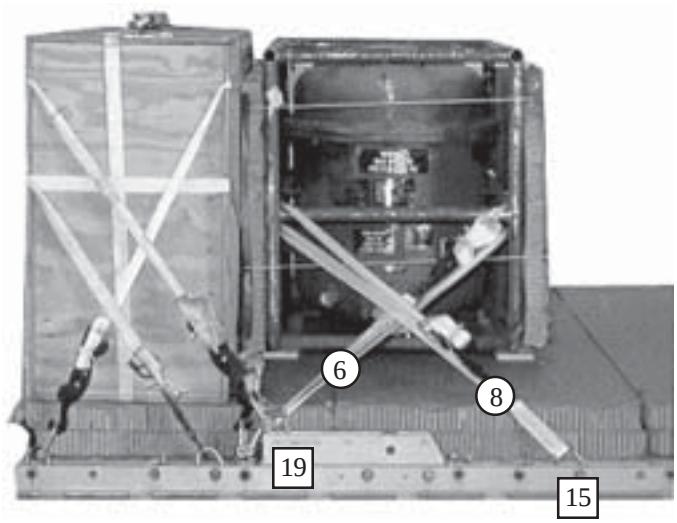

Lashing Number	Tie-down Clevis Number	Instructions
6	19	Route a 15-foot lashing around the front right middle cross member.
7	19A	Route a 15-foot lashing around the front left middle cross member.
8	15	Route a 15-foot lashing around the right rear middle cross member.
9	15A	Route a 15-foot lashing around the left rear middle cross member.

Figure 3-11. Lashings 6 through 9 Installed

POSITIONING AND LASHING THE DRUMS

3-11. Position and lash the fuel drums to the platform as shown in Figure 3-12 and 3-13.

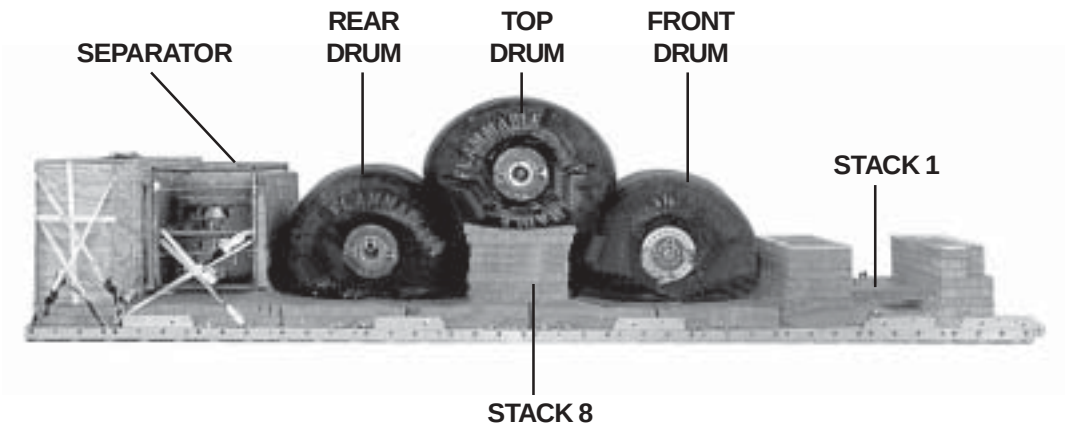

1. Place a platform clevis on one end of two 9-foot (2-loop), type XXVI nylon webbing slings. Attach the slings to each side of the drum (for lifting purposes only) and remove after the drum is positioned (not shown).

2. Position the rear drum next to the fuel separator and centered on the platform.

3. Position the front drum in front of stack 8 centered on the platform. There should be 6 inches between the drum and stack 1. Stack 8 may need to be adjusted for placement.

4. Position the top drum centered on top of stack 8, between the front and rear drums.

Figure 3-12. Fuel Drums Positioned

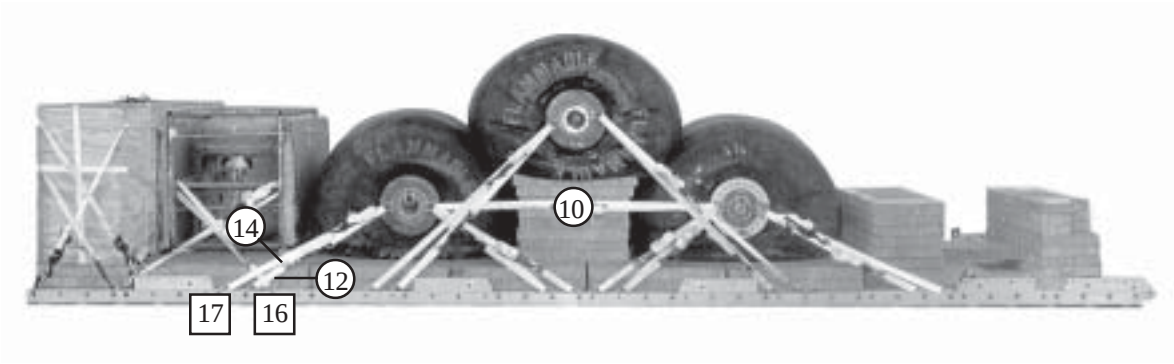

Lashing Number	Tie-down Clevis Number	Instructions
10		Route a lashing from the front shackle of the rear drum to the rear shackle of the front drum on the right side.
11		Route a lashing from the front shackle of the rear drum to the rear shackle of the front drum on the left side.
12	16	Route a lashing through the right rear shackle of the rear drum.
13	16A	Route a lashing through the left rear shackle of the rear drum.
14	17	Route a lashing through the right rear shackle of the rear drum.
15	17A	Route a lashing through the left rear shackle of the rear drum.

Figure 3-13. Lashings 10 through 35 Installed

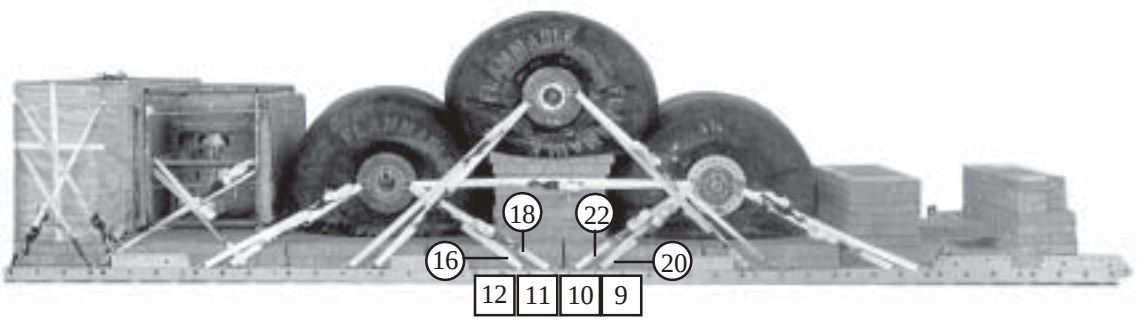

Lashing Number	Tie-down Clevis Number	Instructions
16	12	Route a lashing through the right front shackle of the rear drum.
17	12A	Route a lashing through the left front shackle of the rear drum.
18	11	Route a lashing through the right front shackle of the rear drum.
19	11A	Route a lashing through the left front shackle of the rear drum.
20	9	Route a lashing through the right rear shackle of the front drum.
21	9A	Route a lashing through the left rear shackle of the front drum.
22	10	Route a lashing through the right rear shackle of the front drum.
23	10A	Route a lashing through the left rear shackle of the front drum.

Figure 3-13. Lashings 10 through 35 Installed (continued)

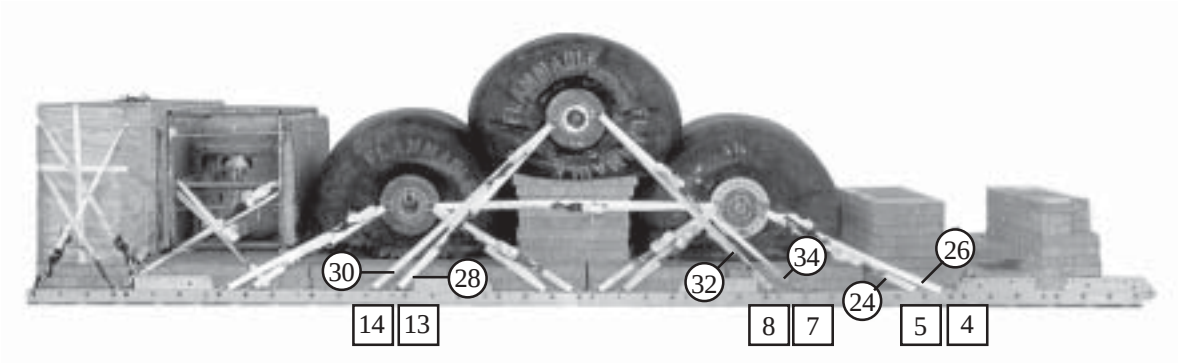

Lashing Number	Tie-down Clevis Number	Instructions
24	5	Route a lashing through the right front shackle of the front drum.
25	5A	Route a lashing through the left front shackle of the front drum.
26	4	Route a lashing through the right front shackle of the front drum.
27	4A	Route a lashing through the left front shackle of the front drum.
28	13	Route a lashing through the right rear shackle of the top drum.
29	13A	Route a lashing through the left rear shackle of the top drum.
30	14	Route a lashing through the right rear shackle of the top drum.
31	14A	Route a lashing through the left rear shackle of the top drum.
32	8	Route a lashing through the right front shackle of the top drum.
33	8A	Route a lashing through the left front shackle of the top drum.
34	7	Route a lashing through the right front shackle of the top drum.
35	7A	Route a lashing through the left front shackle of the top drum.

Figure 3-13. Lashings 10 through 35 Installed (continued)

PREPARING AND POSITIONING THE PUMP

3-12. Prepare the pump according to paragraph 2-5 and as shown in Figure 2-8. Position the load as shown in Figure 3-14.

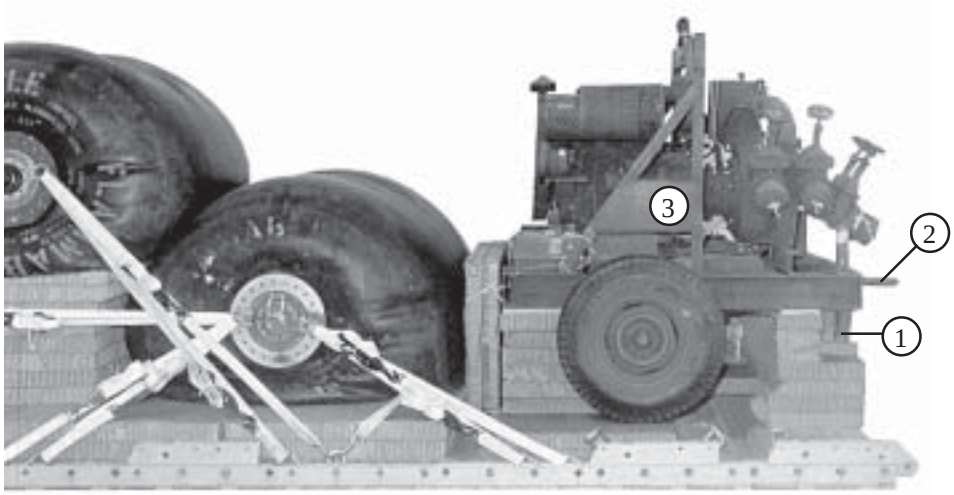

1. Raise the legs and secure with the pins.
2. Retract the lunette.
3. Position the pump on stack 1 and align the front frame edge with the front edge of the platform.
4. Pad the tie-down points with cellulose wadding and tape (not shown).

Figure 3-14. Pump Prepared and Positioned on Platform

LASHING PUMP TO THE PLATFORM

3-13. Lash the pump to the platform as shown in Figure 3-15.

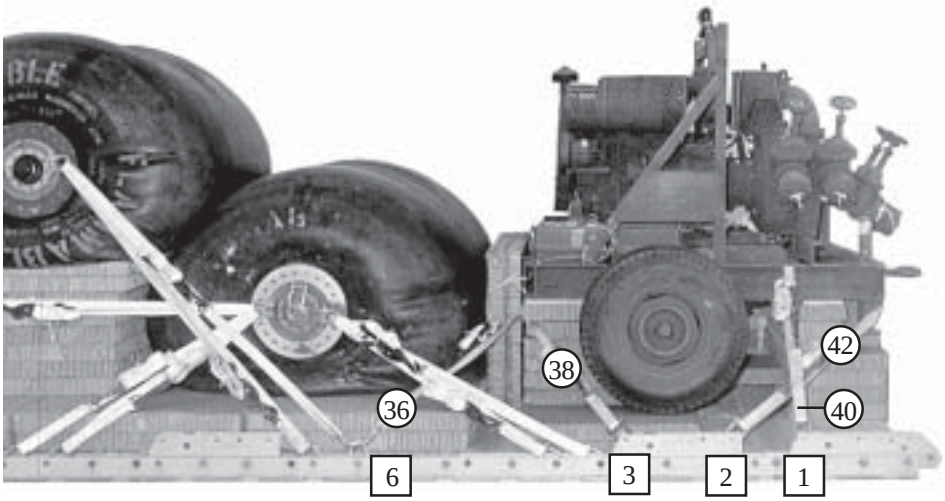

Lashing Number	Tie-down Clevis Number	Instructions
36	6	Route a lashing through the right rear tie-down point.
37	6A	Route a lashing through the left rear tie-down point.
38	3	Route a lashing through the right rear tie-down point.
39	3A	Route a lashing through the left rear tie-down point.
40	2	Route a lashing through the right front tie-down point.
41	2A	Route a lashing through the left front tie-down point.
42	1	Route a lashing around the right side frame.
43	1A	Route a lashing around the left side frame.

Figure 3-15. Lashings 36 through 43 Installed

COVERING THE PUMP

3-14. Place a canvas cover over the pump as shown in Figure 3-16.

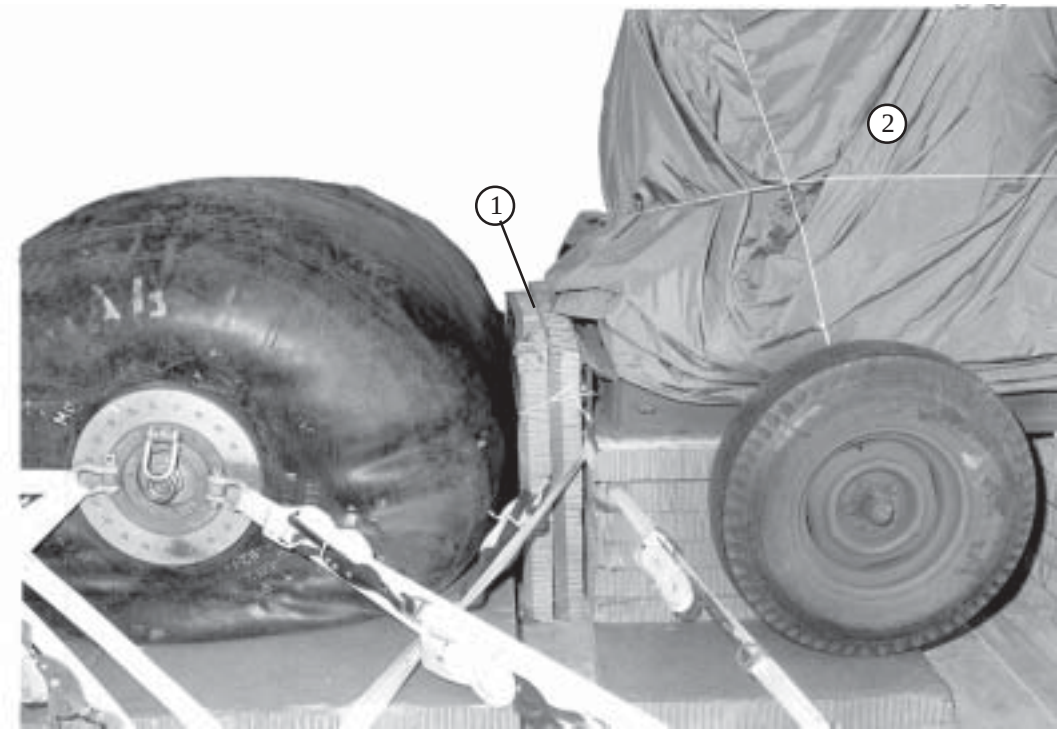

1 Place two pieces of 48- by 28-inch honeycomb between the pump and the drum. Secure the honeycomb to the pump with type III nylon cord.

2 Cover the pump with a canvas cover and secure the cover with type III nylon cord.

Figure 3-16. Pump Covered and Secured

INSTALLING SUSPENSION SLINGS AND SAFETY TIES

3-15. Install suspension slings and safety ties as shown in Figure 3-17.

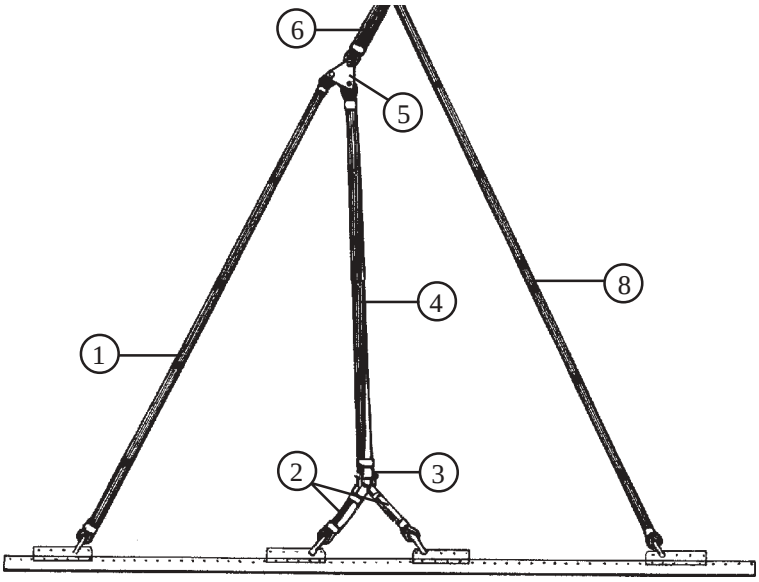

1. Attach a 16-foot (4-loop), type XXVI nylon webbing sling to each rear suspension bracket with a large clevis.
2. Attach a 3-foot (4-loop), type XXVI nylon webbing sling to each second and third suspension bracket with a large suspension clevis.
3. Place the 3-foot slings on each side of the load in the bell of a large suspension clevis.
4. Bolt a 9-foot (4-loop), type XXVI nylon webbing sling to each large suspension clevis. Tie the large suspension clevises to the top drum with type III nylon cord (not shown).
5. Join the rear and center suspension slings together with a 3-point link on each side of the load.
6. Attach a 3-foot (4-loop), type XXVI nylon webbing sling to the top point on the 3-point links.
7. Pad and tape the link assemblies (not shown).
8. Attach a 20-foot (4-loop), type XXVI nylon webbing sling to each front suspension bracket with a large suspension clevis.
9. Raise the suspension slings and install the suspension sling safety ties as shown in Appendix A, to the front and rear suspension slings, six to eight inches above the highest point of the load (not shown).

Figure 3-17. Suspension Slings and Safety Ties Installed

BUILDING AND POSITIONING PARACHUTE STOWAGE PLATFORM

3-16. Build and stow the parachute stowage platform as shown in Figure 3-18. Align the rear edge of the stowage platform on the rear edge of the box.

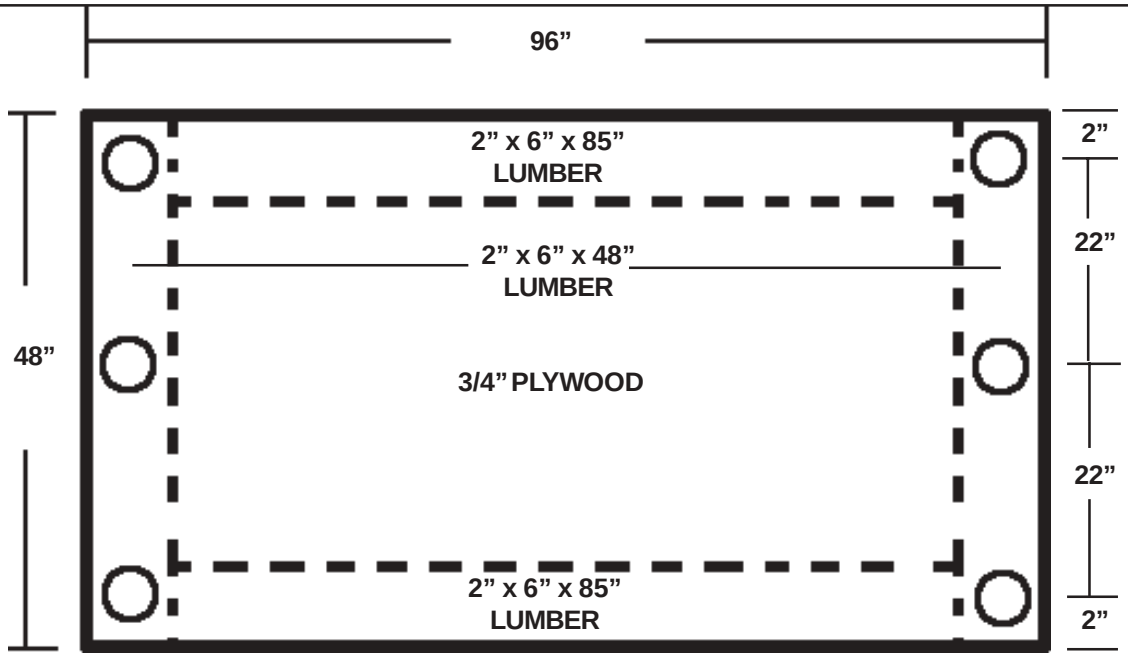

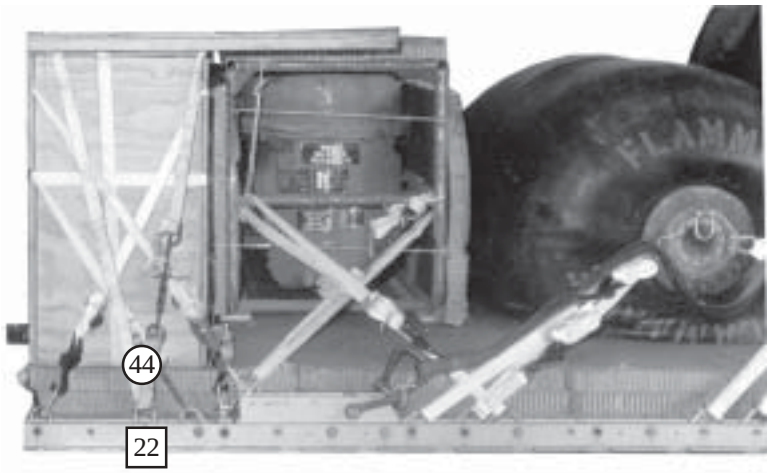

Lashing Number	Tie-down Clevis Number	Instructions
44	22	Route a 15-foot lashing through both right rear holes in the stowage platform.
45	22A	Route a 15-foot lashing through both left rear holes in the stowage platform.

Figure 3-18. Parachute Stowage Platform Built and Positioned

PREPARING AND STOWING CARGO PARACHUTES

3-17. Prepare and stow four G-11 cargo parachutes as shown in Figure 3-19.

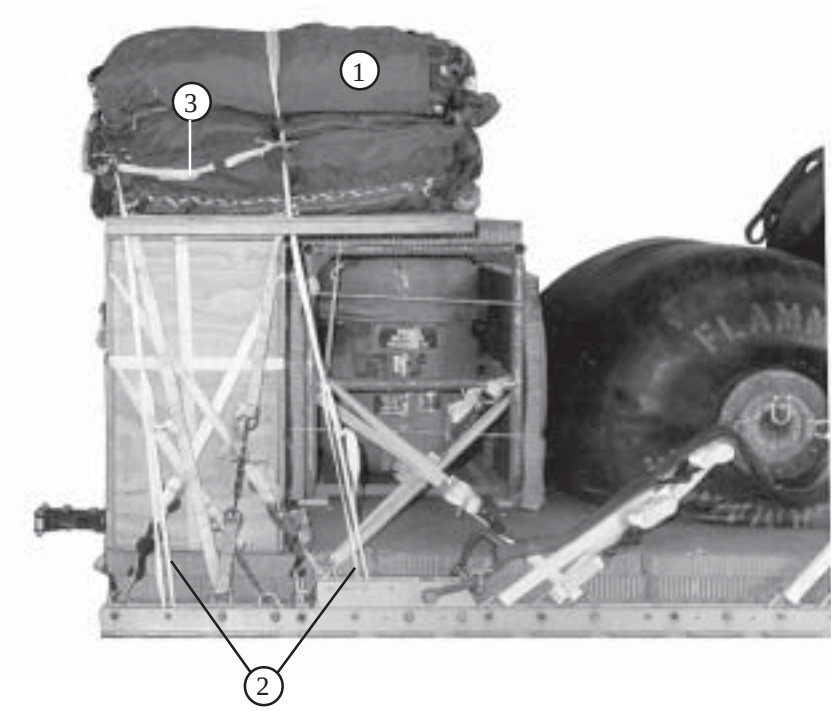

1. Prepare and stow four G-11 cargo parachutes according to FM 4-20.102/NAVSEA SS400-AB-MMO-010/TO 13C7-1-5.
2. Restrain the parachutes according to FM 4-20.102/NAVSEA SS400-AB-MMO-010/TO 13C7-1-5 by using bushings 47 and 47A on the platform and bushings 3 and 3A on the rear suspension link.
3. Install the multicut parachute release strap according to FM 4-20.102/NAVSEA SS400-AB-MMO-010/TO 13C7-1-5.

Figure 3-19. Cargo Parachutes Prepared and Stowed

INSTALLING THE EXTRACTION SYSTEM

3-18. Install the extraction system as shown in Figure 3-20.

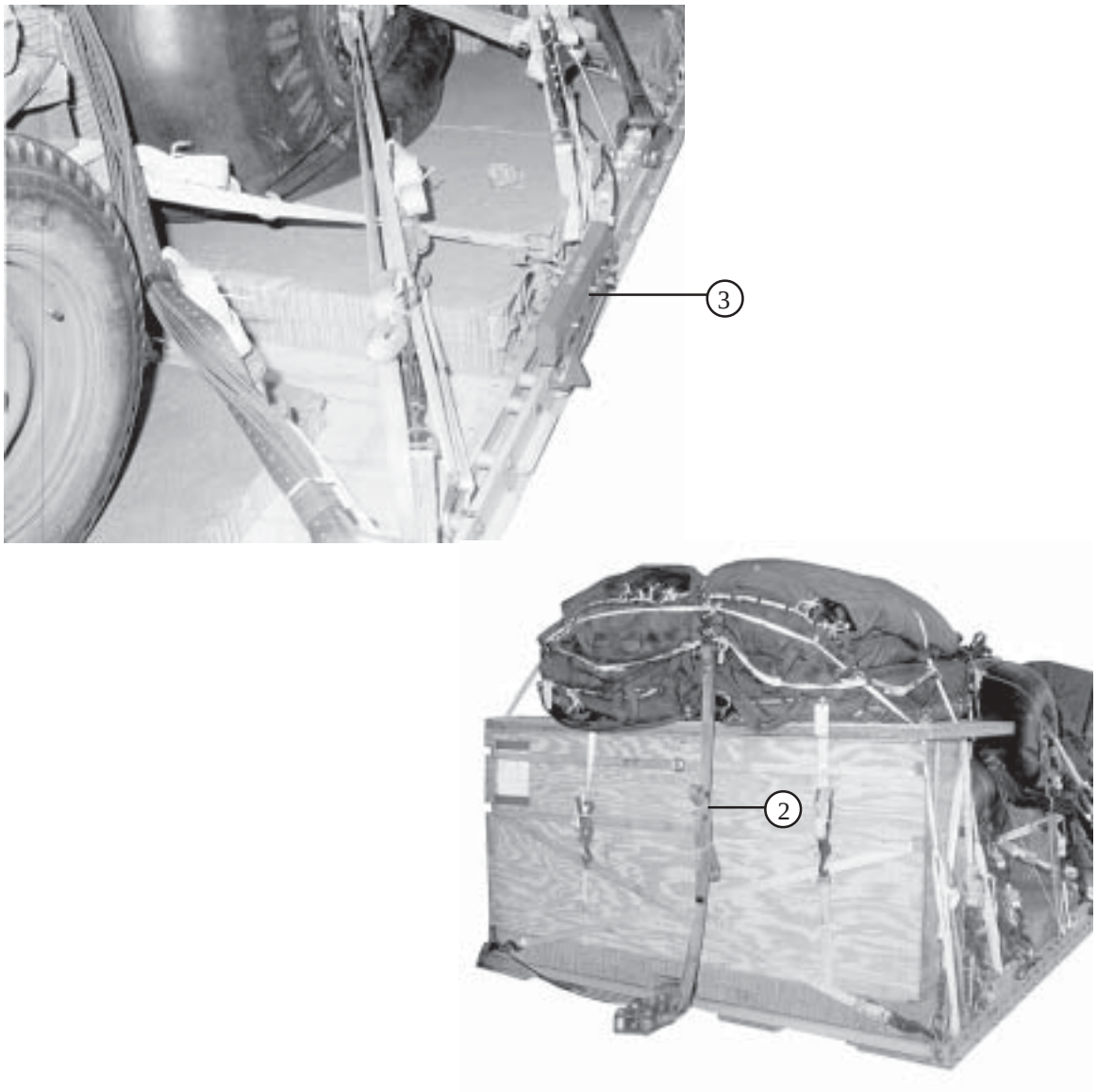

1. Install the EFTC according to FM 4-20.102/NAVSEA SS400-AB-MMO-010/TO 13C7-1-5.
2. Attach a 9-foot (2-loop), type XXVI nylon webbing sling for use as the deployment line.
3. Use the rear mounting holes for the EFTC actuator mounting bracket and a 24-foot cable.

Figure 3-20. Extraction System Installed

INSTALLING THE CARGO PARACHUTE RELEASE SYSTEM

3-19. Install the M-2 cargo parachute release system as shown in Figure 3-21.

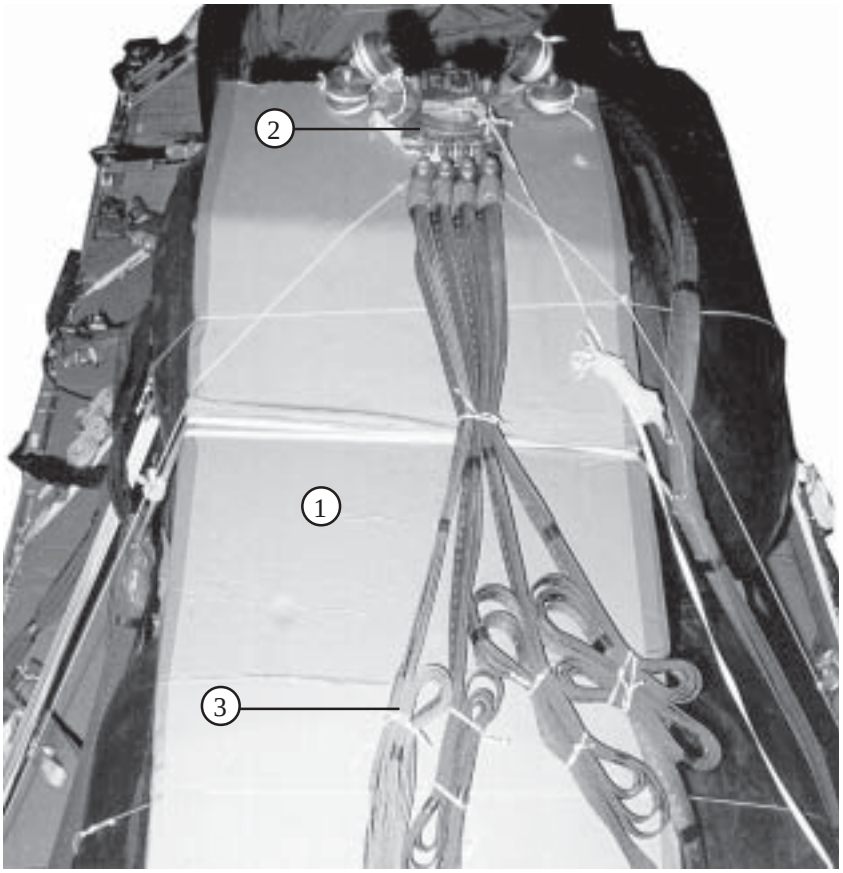

1. Place a 96- by 24-inch piece of honeycomb from the separator to the top of the top drum. Secure the honeycomb with type III nylon cord.

2. Place the M-2 cargo parachute release on the honeycomb placed on top of the top drum. Attach the suspension slings and the parachute riser extension to the M-2 cargo parachute release according to FM 4-20.102/NAVSEA SS400-AB-MMO-010/TO 13C7-1-5. Secure the cargo parachute release with type III nylon cord.

3. S-fold and tie any slack in the suspension slings with Type I, 1/4-inch cotton webbing.

Figure 3-21. Cargo Parachute Release Installed

PLACING EXTRACTION PARACHUTE

3-20. Select the extraction parachute and extraction line needed using the extraction line requirements table in FM 4-20.102/NAVSEA SS400-AB-MMO-010/TO 13C7-1-5. Rig the extraction line in an extraction line bag according to TM 10-1670-286-20/TO 13C5-2-41. Place the extraction parachute and extraction line on the load for installation in the aircraft.

INSTALLING PROVISIONS FOR EMERGENCY RESTRAINTS

3-21. Select and install the provisions for emergency aft restraints according to the emergency aft restraint requirements table in FM 4-20.102/NAVSEA SS400-AB-MMO-010/TO 13C7-1-5.

MARKING RIGGED LOAD

3.22. Mark the rigged load according to FM 4-20.102/NAVSEA SS400-AB-MMO-010/TO 13C7-1-5 and as shown in Figure 3-22. Complete Shipper's Declaration for Dangerous Goods and affix to the load. If the load varies from the one shown, the weight, height, CB, tipoff curve, and parachute requirements must be recomputed.

EQUIPMENT REQUIRED

3-23. Use the equipment list in Table 3-1 to rig the load shown in Figure 3-22.

CAUTION:

Make the final inspection required by FM 4-20.102/NAVSEA SS400-AB-MMO-010/TO 13C7-1-5 before the load leaves the rigging site.

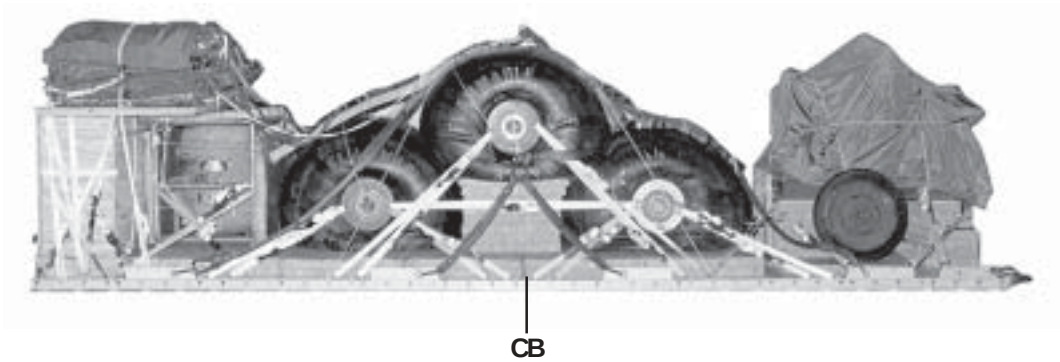

RIGGED LOAD DATA

Weight	19,689 pounds
Maximum Weight	21,000 pounds
Height	89 inches
Width	108 inches
Overall Length	315 inches
Overhang: Front (Tongue of Pump)	9 inches
Rear (EFTC)	18 inches
Center of Balance (CB) (from front edge of platform)	144 inches
Extraction System	EFTC

Figure 3-22. Three 500-Gallon Drums with Pump and Separator Rigged for Low-Velocity Airdrop

Table 3-1. Equipment Required for Rigging Three 500-Gallon Drums with Pump and Separator

National Stock Number	Item	Quantity
8040-00-273-8713	Adhesive, paste, 1-gal	As required
1670-01-035-6054	Bridle, extraction line bag (for DES)	1
4030-00-090-5354	Clevis, large	9
4030-00-678-8562	Clevis, medium	6
8305-00-880-8155	Cloth coated, green, 60-inch	As required
4020-00-240-2146	Cord, nylon, type III, 550-lb	As required
1670-00-434-5782	Coupling, airdrop, extraction force transfer with cable, 24-ft	1
1670-00-360-0328	Cover, Clevis, large	4
8135-00-664-6958	Cushioning material, packaging, cellulose wadding	As required
5365-00-937-0147	D-ring, heavy-duty, 10,000-lb	24
8305-00-958-3685	Felt, 1/2-in thick	As required
1670-00-003-4391	Knife, miniature, cutter (for DES)	1
1670-01-183-2678	Leaf, extraction line (line bag)(add 1 for FOR DES)	2
	Line, drogue (for DES)	
1670-01-064-4452	60-ft (1-loop), type XXVI	1
	Line, extraction:	
1670-01-062-6313	For C-130: 60-ft (3-loop), type XXVI	1
1670-01-107-7651	For C-141, C-5, C-17: 140-ft (3-loop), type XXVI	1
	Link Assembly:	
	Two-point:	
5306-00-435-8994	Bolt, 1-in diam, 4-in long (add 2 for DES)	(2)
5310-00-232-5165	Nut, 1-in, hexagonal (add 2 for DES)	(2)
1670-00-003-3454	Plate, side, 5 1/2-in	(2)
1670-00-003-1953	Plate, side, 3 3/4-in (for DES)	(2)
5365-00-007-3414	Spacer, large (add 2 for DES)	(2)
1670-01-307-1055	Three-point	2
1670-01-483-8259	Link, tow release mechanism (H-Block) C-17 aircraft	1
5510-00-220-6146	Lumber, 2- by 4- by 96-in:	4
5510-00-220-6148	Lumber, 2- by 6 by 96-in:	3
5315-00-010-4659	Nail, steel wire, 8d	As required

Table 3-1. Equipment Required for Rigging Three 500-Gallon Drums with Pump and Separator (continued)

National Stock Number	Item	Quantity
1670-00-753-3928	Pad, energy-dissipating (honeycomb), 3- by 36- by 96-in	30 sheets
	Parachute:	
	Cargo:	
1670-01-016-7841	G-11B	4
	Cargo extraction:	
1670-00-040-8135	28-ft	1
	Drogue (for DES)	
1670-01-063-3715	15-ft	1
	Platform, airdrop, type V, 24-ft:	
1670-01-353-8425	Bracket assembly, coupling	(1)
1670-01-162-2372	Clevis assembly, type V	(53)
1670-01-162-2376	Extraction bracket assembly	(1)
1670-01-247-2389	Bracket, suspension	(8)
1670-01-162-2381	Tandem link assembly (Multipurpose link)	(2)
5530-00-128-4981	Plywood, 3/4-in	4 sheets
1670-01-097-8817	Release, cargo parachute, M-2	1
	Sling, cargo, airdrop	
	For suspension and lifting:	
1670-01-062-6306	3-ft (4-loop), type XXVI nylon webbing	6
1670-01-062-6305	9-ft (4-loop), type XXVI nylon webbing	2
1670-01-062-6308	16-ft (4-loop), type XXVI nylon webbing	2
1670-01-064-4453	20-ft (4-loop), type XXVI nylon webbing	2
	For deployment:	
1670-01-062-6304	9-ft (2-loop), type XXVI nylon webbing	1
	For riser extension:	
1670-01-062-6313	60-ft (3-loop), type XXVI nylon webbing	4
5340-00-040-8219	Strap, parachute release, multi-cut, comes w/ 2 knives	2
7510-00-266-5016	Tape, adhesive, 2-in	As required
1670-00-266-6710	Tape, masking, 2-in	As required
1670-00-937-0271	Tie-down assembly, 15-foot	53
8310-00-917-3945	Thread, Cotton, Ticket 8/7	As required
	Webbing:	
8305-00-268-2411	Cotton, 1/4-in, type I	As required
8305-00-082-5752	Nylon, tubular, 1/2-in	As required
8305-00-263-3591	Nylon, Type VIII	As required

SECTION II - RIGGING FOUR 500-GALLON DRUMS

DESCRIPTION OF LOAD

3-24. The four collapsible drums are rigged on a 28-foot platform with five G-11 cargo parachutes. Each drum is filled with a maximum of 432 gallons of liquid. When empty, each drum weighs 250 pounds and is 62 inches long and 53 inches in diameter. The 350-GPM pump with filter/separator and hose box are accompanying loads. The total rigged load has a maximum rigged weight of 25,700 pounds with a width of 108 inches and a length of 372 inches. It has an overhang of 18 inches in the front and 9 inches in the rear. The load has a center of balance of 172 inches from the front of the platform.

Notes:
1. For drums filled with liquid other than water, use Table 1-1 to recompute the weight.
2. If the load varies from the one shown, the weght, height, CB, tipoff curve, and parachute requirements must be recomputed.
3. Do not pressurze drums with air.

PREPARING PLATFORM

3-25. Prepare a 28-foot type V airdrop platform using two tandem links, eight suspension brackets, and 68 tie-down clevises as shown in Figure 3-23.

Notes:
1. The nose bumper may or may not be installed.
2. Measurements given in this section are from the front edge of the platform, NOT from the front edge of the nose bumper.

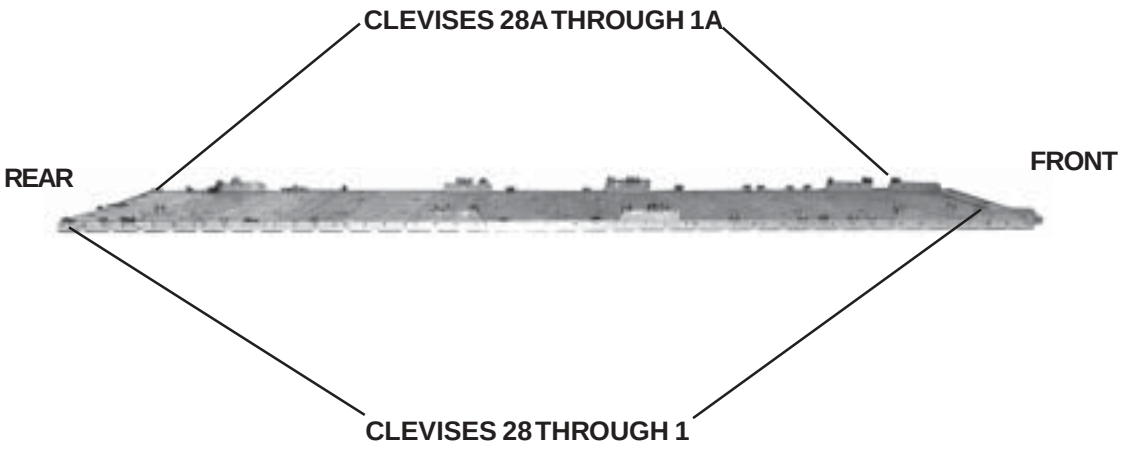

Steps:

1. Inspect, or assemble and inspect, the platform as outlined in TM 10-1670-268-20&P/TO 13C7-52-22.
2. Install a tandem link on the front of each platform side rail using holes 1, 2, and 3.
3. Install a suspension bracket to bushings 6, 7, and 8 on each platform side rail.
4. Install a suspension bracket to bushings 22, 23, and 24 on each platform side rail.
5. Install a suspension bracket to bushings 33, 34, and 35 on each platform side rail.
6. Install a suspension bracket to bushings 49, 50, and 51 on each platform side rail.
7. Install a tie-down clevis to bushing 4 of each tandem link.
8. Install a tie-down clevis to bushings 1 and 4 of each first suspension bracket.
9. Install a tie-down clevis to bushings 2, 3, and 4 of each second suspension bracket.
10. Install a tie-down clevis to bushings 1, 2, and 3 of each third suspension bracket.
11. Install a tie-down clevis to bushing 3 of the fourth suspension bracket.
12. Starting at the front of each platform side rail, install a tie-down clevis to the bushings bolted to holes 10, 11, 13, 14, 18, 26, 31, 42, 43, 46 (doubled), 47, 52 (tripled), 53, 54, and 56 (doubled).
13. Starting at the front of the platform, number the clevises bolted to the right side from 1 through 28 and those bolted to the left side from 1A through 28A.
14. Number the clevis on bushing 46 as clevis 20, and 20A and the doubled clevis as 19 and 19A.
15. Number the clevis on bushing 56 as clevis 28, and 28A and the doubled clevis as 27 and 27A.

Figure 3-23. Platform Prepared

PREPARING HONEYCOMB

3-26. Build honeycomb stacks as shown in Figure 3-2 and Figures 3-24 and 3-25.

STACK 2
96" X 22 1/2"
HONEYCOMB

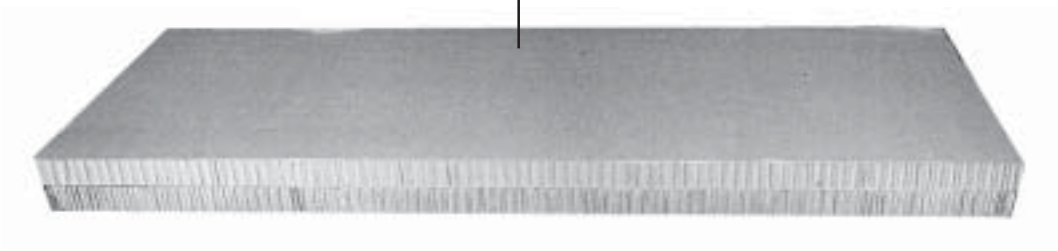

STACKS 3-9
96" X 36"
HONEYCOMB

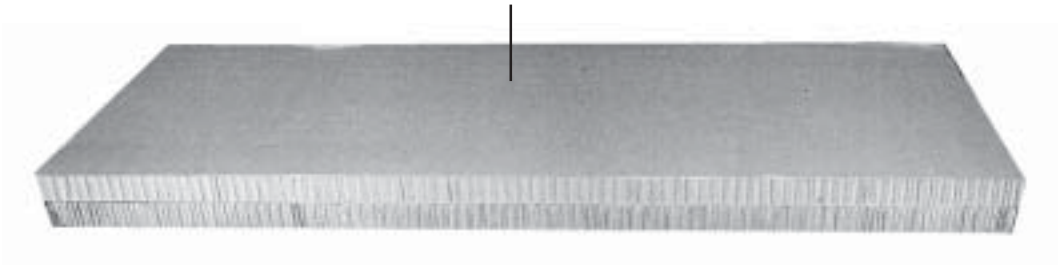

Stack Number	Pieces	Width (Inches)	Length (Inches)	Material	Instructions
1					Prepare as shown in Figure 3-2.
2	2	96	22 1/2	Honeycomb	Glue layers together.
3-9	2	96	36	Honeycomb	Glue layers together.

Figure 3-24. Honeycomb Stacks 1 through 9 Prepared

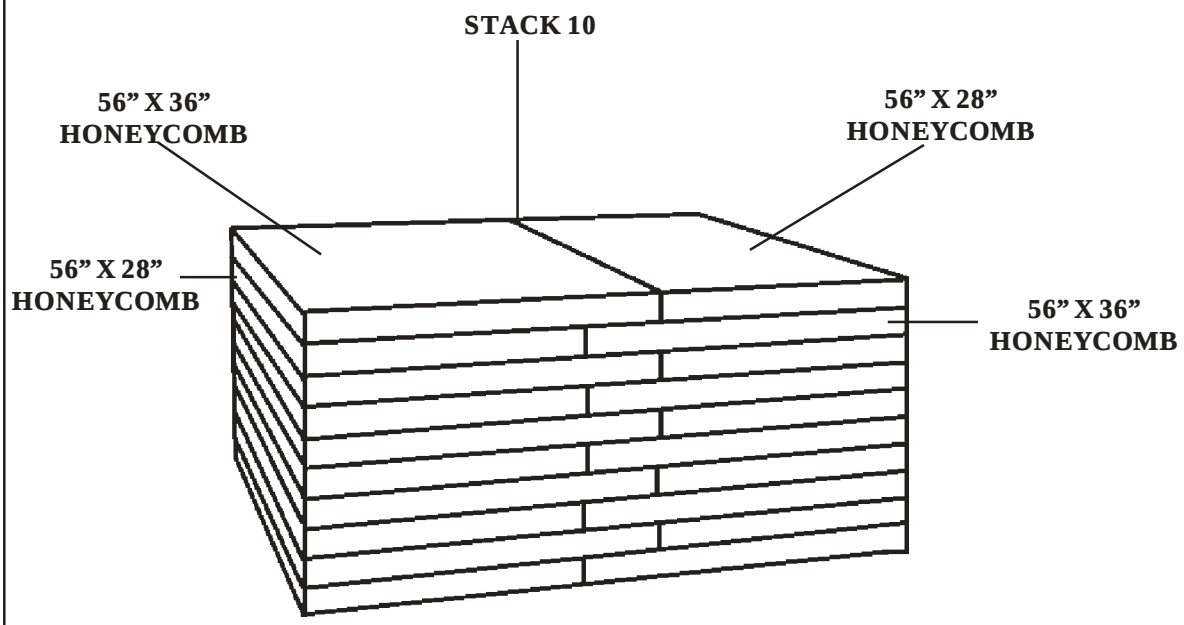

Stack Number	Pieces	Width (Inches)	Length (Inches)	Material	Instructions
10	10	56	36	Honeycomb	Form a stack of 10 layers by placing a 56 x 36-inch piece of honeycomb and a 56 x 28-inch piece of honeycomb side by side. Alternate and glue the pieces to the previous layer.
	10	56	28	Honeycomb	Same as above.

Figure 3-25. Honeycomb Stack 10 Prepared

POSITIONING HONEYCOMB STACKS

3-27. Position honeycomb stacks as shown in Figure 3-26.

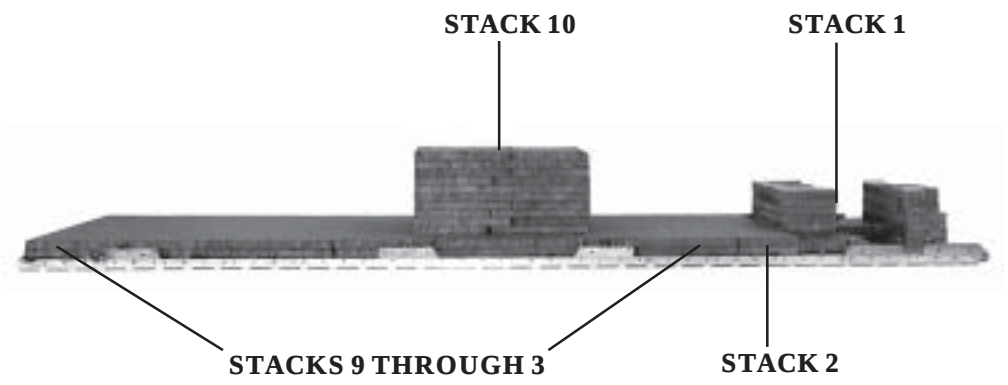

1. Center stack 1 on the front edge of the platform.
2. Center stack 9 on the rear edge of the platform.
3. Place stack 8 against and in front of stack 8.
4. Place stack 7 against and in front of stack 8.
5. Place stack 6 against and in front of stack 7.
6. Place stack 5 against and in front of stack 6.
7. Place stack 4 against and in front of stack 5.
8. Place stack 3 against and in front of stack 4.
9. Place stack 2 against and in front of stack 3.
10. Center stack ten 172 inches from the front edge of the platform. Ensure the 64-inch length is aligned with the platform side rails.

Figure 3-26. Honeycomb Stacks Positioned

BUILDING EQUIPMENT HOSE BOX

3-28. Build the equipment hose box as shown in Figure 3-5.

POSITIONING EQUIPMENT HOSE BOX

3-29. Position the equipment hose box on stack 9 as shown in Figure 3-6.

STORING EQUIPMENT IN THE EQUIPMENT HOSE BOX

3-30. Store the equipment in the equipment hose box as shown in Figure 3-7.

LASHING EQUIPMENT HOSE BOX TO PLATFORM

3-31. Lash the equipment hose box to the platform as shown in Figures 3-27 and 3-28.

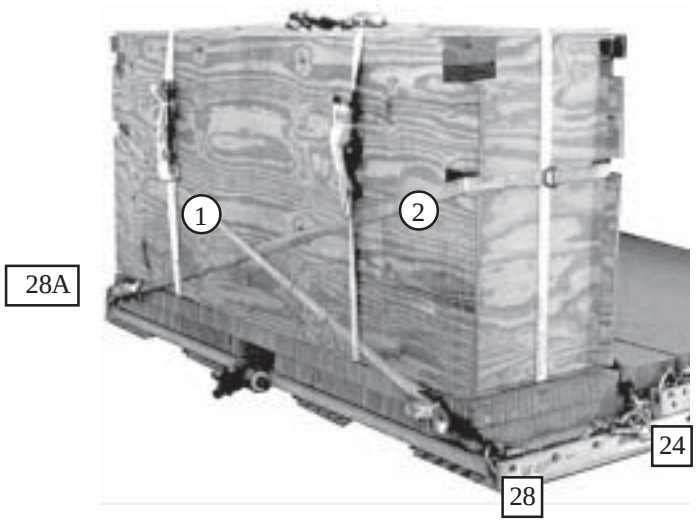

Note: Ensure lashings 1 and 2 are routed under the load binders on the rear of the box.

Lashing Number	Tie-down Clevis Number	Instructions
1	28 and 24	Route a 30-foot lashing from clevis 28 around the rear of the equipment hose box, through the left bottom notches of the box to clevis 24.
2	28A and 24A	Route a 30-foot lashing from clevis 28A around the rear of the equipment hose box, through the right bottom notches of the box to clevis 24A.

Figure 3-27. Lashings 1 and 2 Installed

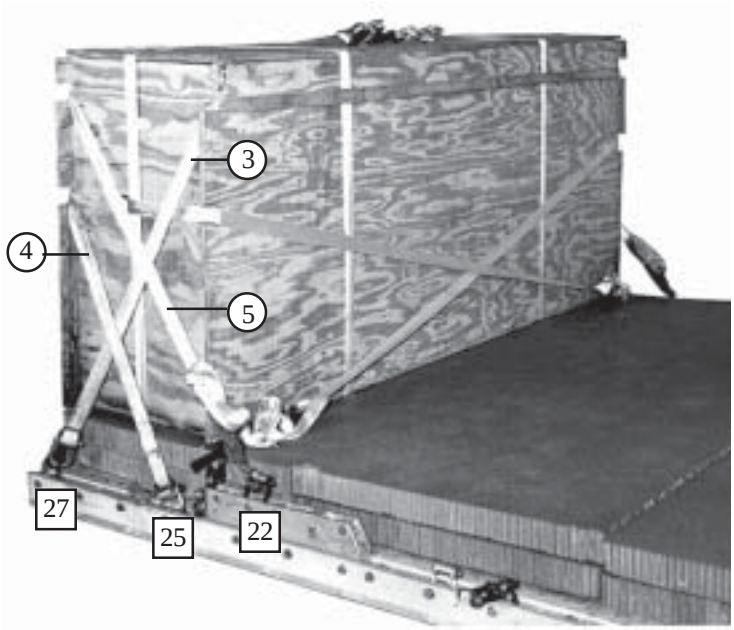

Lashing Number	Tie-down Clevis Number	Instructions
3	27 and 27A	Route a 15-foot lashing through its own D-ring on clevis 27, around the front top cutouts and load bind on clevis 27A.
4	25 and 25A	Route a 15-foot lashing through its own D-ring on clevis 25, around the rear bottom cutouts and load bind on clevis 25A.
5	22 and 22A	Route a 30-foot lashing through the rear top cutouts of the equipment hose box. Ensure the lashing is routed under the load binders on the rear of the box. Load bind to clevises 22 and 22A.

Figure 3-28. Lashings 3 through 5 Installed

PREPARING AND POSITIONING FUEL SEPARATOR

3-32. Prepare and position the fuel separator as shown in Figure 3-10.

LASHING FUEL SEPARATOR TO PLATFORM

3-33. Lash the fuel separator to the platform as shown in Figure 3-29.

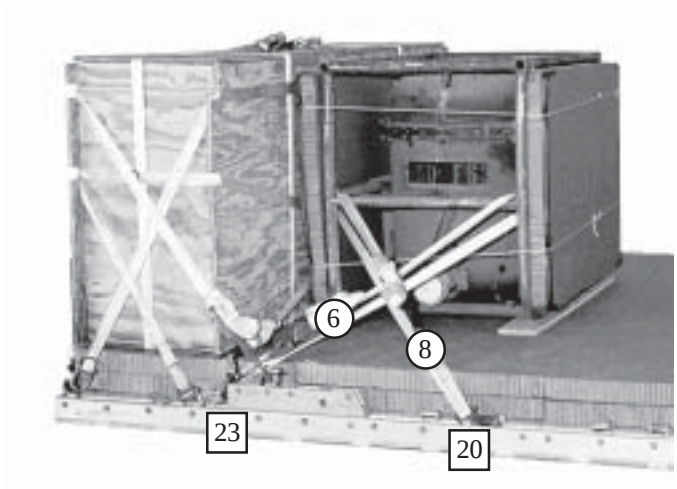

Lashing Number	Tie-down Clevis Number	Instructions
6	23	Route a 15-foot lashing around the front right middle cross member.
7	23A	Route a 15-foot lashing around the front left middle cross member.
8	20	Route a 15-foot lashing around the right rear middle cross member.
9	20A	Route a 15-foot lashing around the left rear middle cross member.

Figure 3-29. Lashings 6 through 9 Installed

POSITIONING AND LASHING THE DRUMS

3-34. Position and lash the fuel drums to the platform as shown in Figures 3-30 through 3-35.

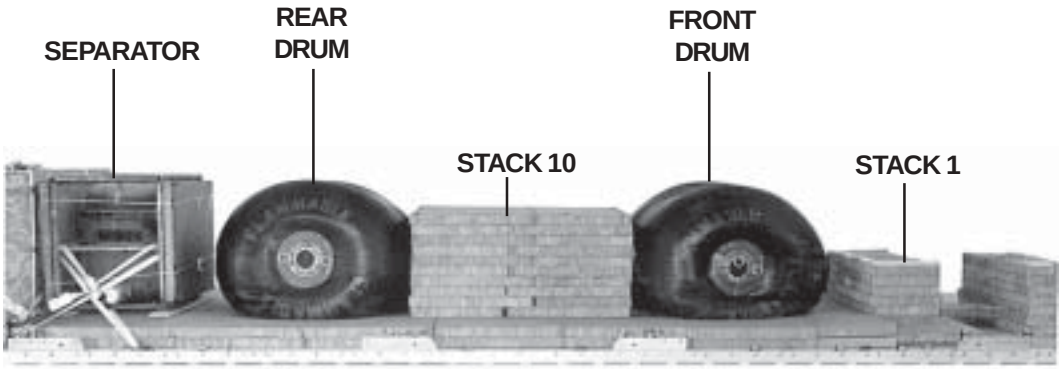

1. Place a platform clevis on one end of two 9-foot (2-loop), type XXVI nylon webbing slings. Attach the slings to each side of the drum (for lifting purposes only) and remove after the drum is positioned (not shown).

2. Position the rear drum next to the fuel separator and centered on the platform. Stack 10 may need to be moved for placement. There should be 6 inches between the drum and the separator.

3. Position the front drum in front of stack 10 centered on the platform. There should be 6 inches between the drum and stack 1.

Figure 3-30. Front and Rear Drums Positioned

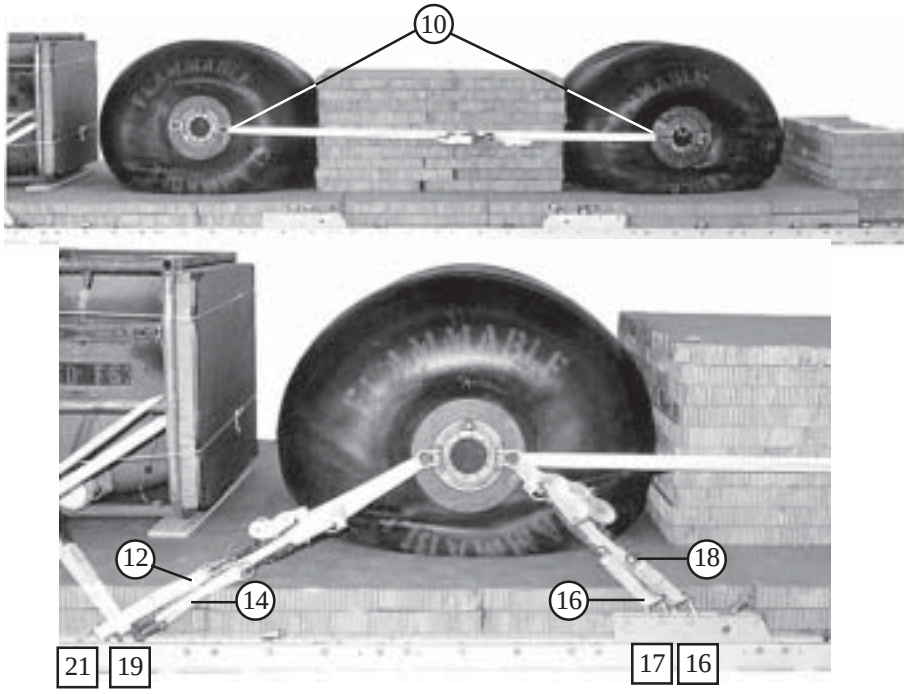

Lashing Number	Tie-down Clevis Number	Instructions
10		Route a lashing from the front shackle of the rear drum to the rear shackle of the front drum on the right side.
11		Route a lashing from the front shackle of the rear drum to the rear shackle of the front drum on the left side.
12	21	Route a lashing through the right rear shackle of the rear drum.
13	21A	Route a lashing through the left rear shackle of the rear drum.
14	19	Route a lashing through the right rear shackle of the rear drum.
15	19A	Route a lashing through the left rear shackle of the rear drum.
16	17	Route a lashing through the right front shackle of the rear drum.
17	17A	Route a lashing through the left front shackle of the rear drum.
18	16	Route a lashing through the right front shackle of the rear drum.
19	16A	Route a lashing through the left front shackle of the rear drum.

Figure 3-31. Lashings 10 through 19 Installed

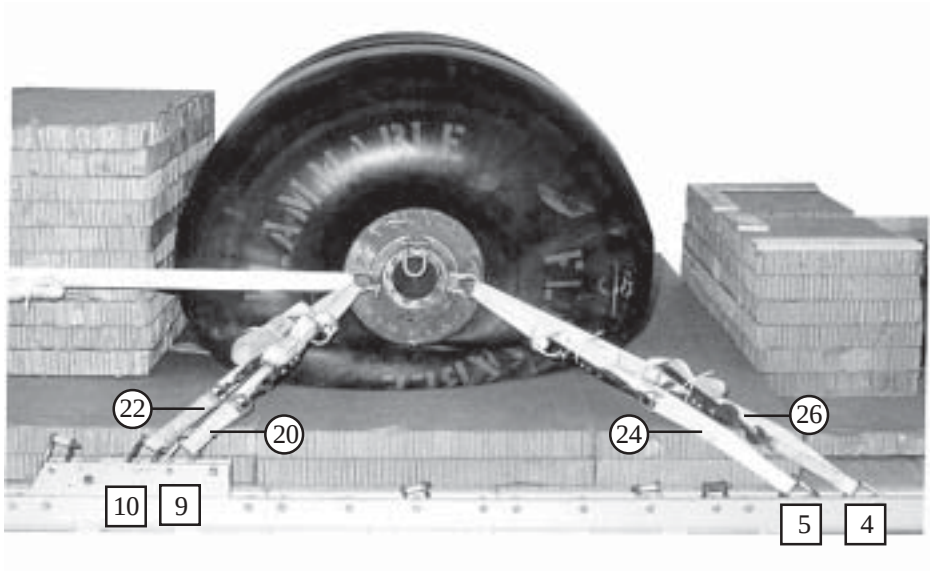

Lashing Number	Tie-down Clevis Number	Instructions
20	9	Route a lashing through the right rear shackle of the front drum.
21	9A	Route a lashing through the left rear shackle of the front drum.
22	10	Route a lashing through the right rear shackle of the front drum.
23	10A	Route a lashing through the left rear shackle of the front drum.
24	5	Route a lashing through the right front shackle of the front drum.
25	5A	Route a lashing through the left front shackle of the front drum.
26	4	Route a lashing through the right front shackle of the front drum.
27	4A	Route a lashing through the left front shackle of the front drum.

Figure 3-32. Lashings 20 through 27 Installed

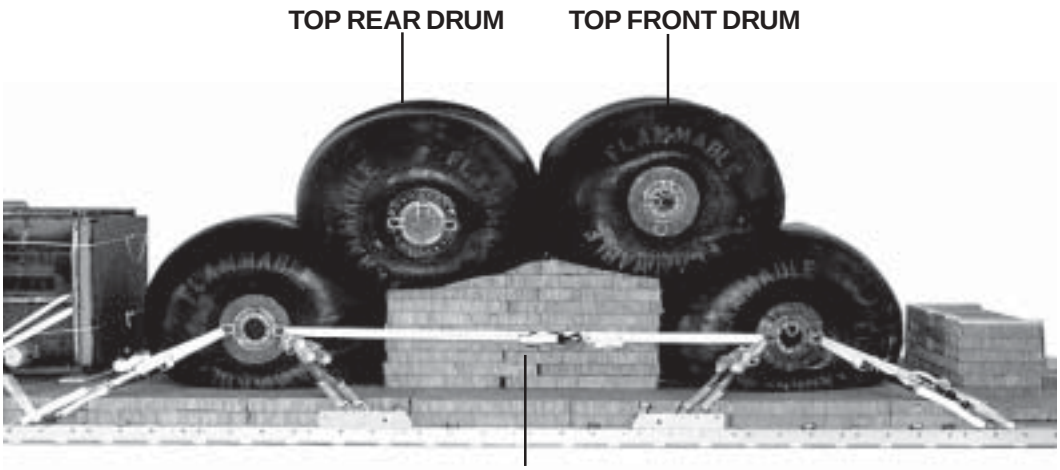

1. Position the top rear drum to the rear of stack 10.
2. Position the top front drum to the front of stack 10. Ensure each drum is equally placed on stack 10.

Figure 3-33. Top Rear and Top Front Drums Positioned

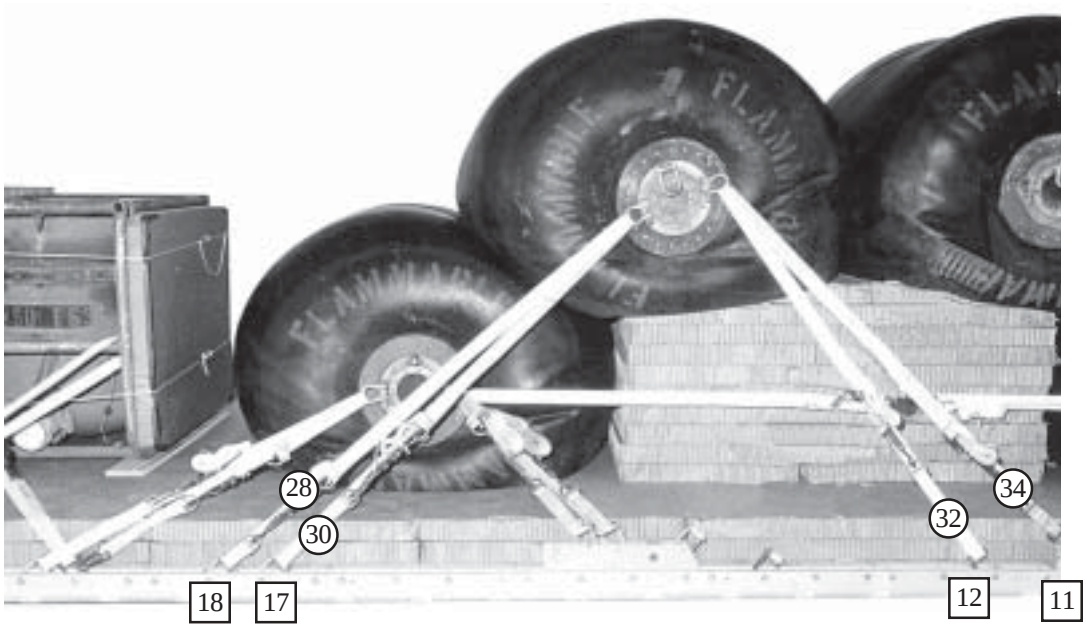

Lashing Number	Tie-down Clevis Number	Instructions
28	18	Route a lashing through the right rear shackle of the top rear drum.
29	18A	Route a lashing through the left rear shackle of the top rear drum.
30	17	Route a lashing through the right rear shackle of the top rear drum.
31	17A	Route a lashing through the left rear shackle of the top rear drum.
32	12	Route a lashing through the right front shackle of the top rear drum.
33	12A	Route a lashing through the left front shackle of the top rear drum.
34	11	Route a lashing through the right front shackle of the top rear drum.
35	11A	Route a lashing through the left front shackle of the top rear drum.

Figure 3-34. Lashings 28 through 35 Installed

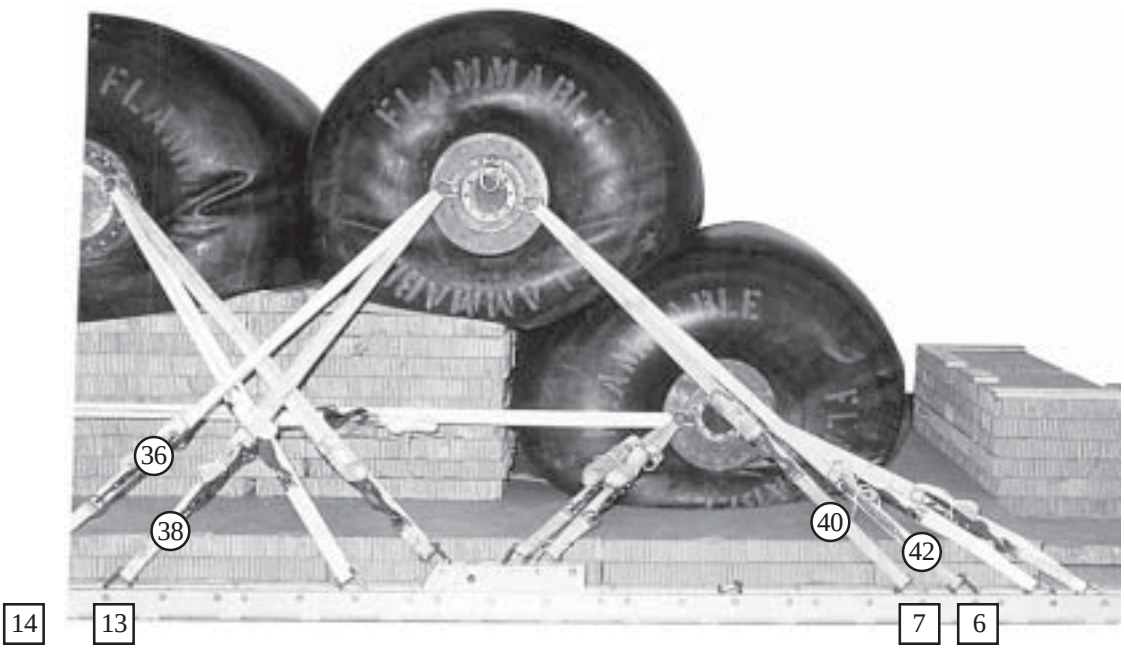

Lashing Number	Tie-down Clevis Number	Instructions
36	14	Route a lashing through the right rear shackle of the top front drum.
37	14A	Route a lashing through the left rear shackle of the top front drum.
38	13	Route a lashing through the right rear shackle of the top front drum.
39	13A	Route a lashing through the left rear shackle of the top front drum.
40	6	Route a lashing through the right front shackle of the top front drum.
41	6A	Route a lashing through the left front shackle of the top front drum.
42	7	Route a lashing through the right front shackle of the top front drum.
43	7A	Route a lashing through the left front shackle of the top front drum.

Figure 3-35. Lashings 36 through 43 Installed

PREPAING AND POSITIONING THE PUMP

3-35. Prepare the pump according to paragraph 2-5 and as shown in Figure 2-8. Position the pump as shown in Figure 3-14.

LASHING THE PUMP TO THE PLATFORM

3-36. Lash the pump to the platform as shown in Figure 3-36.

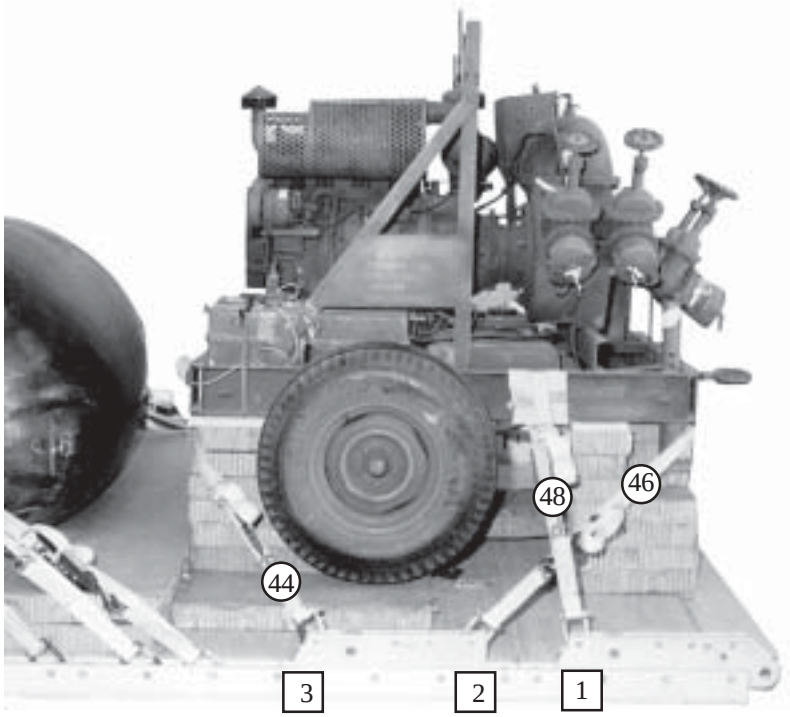

Lashing Number	Tie-down Clevis Number	Instructions
44	3	Route a lashing through the right rear tiedown point.
45	3A	Route a lashing through the left rear tiedown point.
46	2	Route a lashing through the right front tiedown point.
47	2A	Route a lashing through the left front tiedown point.
48	1	Route a lashing around the right side frame.
49	1A	Route a lashing around the left side frame.
50	8	Route a lashing through the right rear tiedown point (not shown).
51	8A	Route a lashing through the right rear tiedown point.

Figure 3-36. Lashings 44 through 51 Installed

COVERING THE PUMP

3-37. Place a canvas cover over the pump as shown in Figure 3-16. Position the pump as shown in Figure 3-14.

INSTALLING SUSPENSION SLINGS AND SAFETY TIES

3-38. Install suspension slings and safety ties as shown in Figure 3-37.

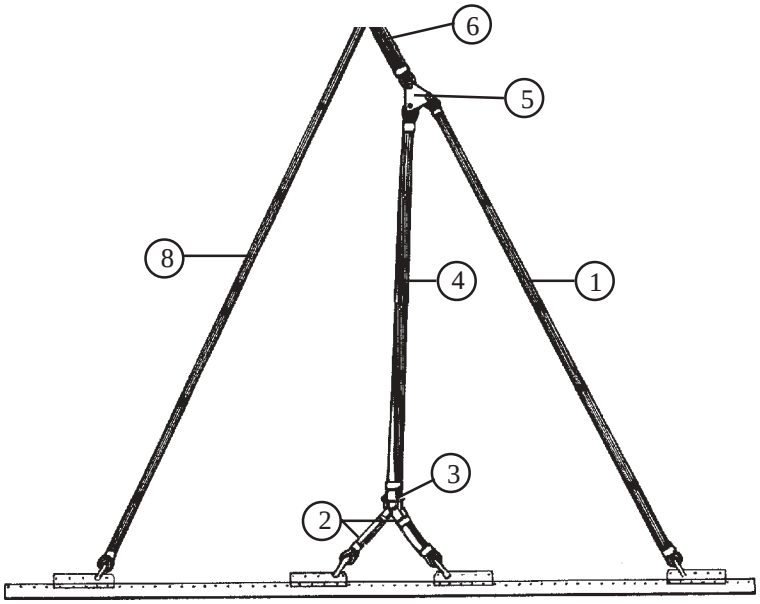

1. Attach a 16-foot (4-loop), type XXVI nylon webbing sling to each front suspension bracket with a large clevis.
2. Attach a 3-foot (4-loop), type XXVI nylon webbing sling to each second and third suspension bracket with a large suspension clevis.
3. Place the 3-foot slings on each side of the load in the bell of a large suspension clevis.
4. Bolt a 9-foot (4-loop), type XXVI nylon webbing sling to each large suspension clevis. Tie the large suspension clevises to both top drums with type III nylon cord (not shown).
5. Join the front and center suspension slings together with a 3-point link on each side of the load.
6. Attach a 3-foot (4-loop), type XXVI nylon webbing sling to the top point on the 3-point links.
7. Pad and tape the link assemblies (not shown).
8. Attach a 20-foot (4-loop), type XXVI nylon webbing sling to each rear suspension bracket with a large suspension clevis.
9. Raise the suspension slings and install the suspension sling safety ties as shown in Appendix A, to the front and rear suspension slings, six to eight inches above the highest point of the load (not shown).

Figure 3-37. Suspension Slings and Safety Ties Installed

BUILDING AND POSITIONING PARACHUTE STOWAGE PLATFORM

3-39. Build and stow the parachute stowage platform as shown in Figure 3-38. Align the rear edge of the stowage platform on the rear edge of the box.

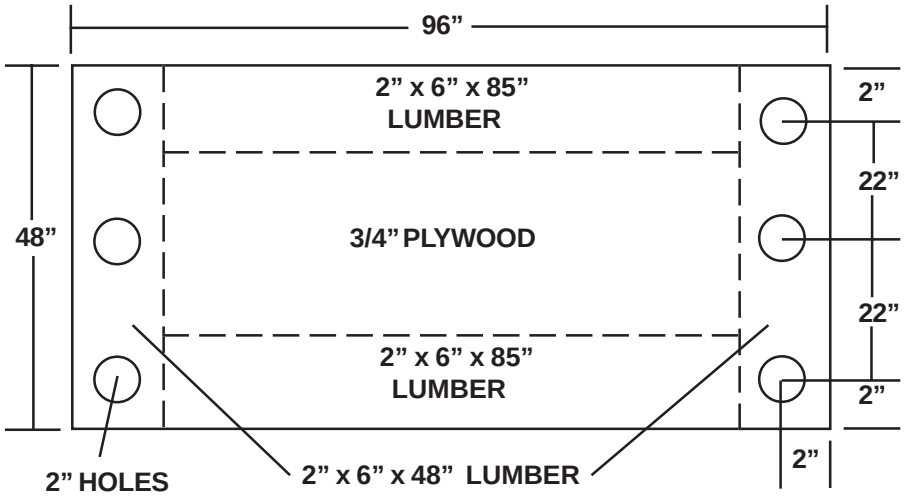

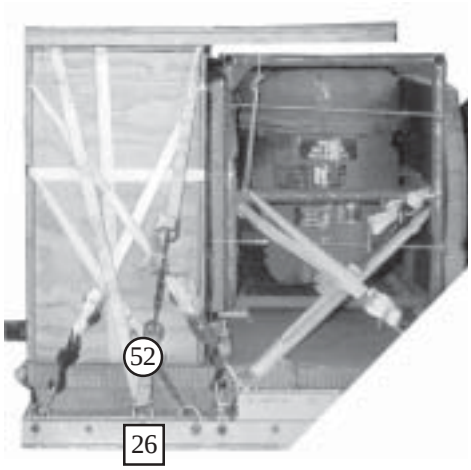

Lashing Number	Tie-down Clevis Number	Instructions
52	26	Route a lashing from clevis 26 through the rear and center right holes of the stowage platform.
53	26A	Route a lashing from clevis 26A through the rear and center left holes in the stowage platform.

Figure 3-38. Parachute Stowage Platform Built and Positioned

PREPARING AND STOWING CARGO PARACHUTES

3-40. Prepare and stow cargo parachutes as shown in Figure 3-39.

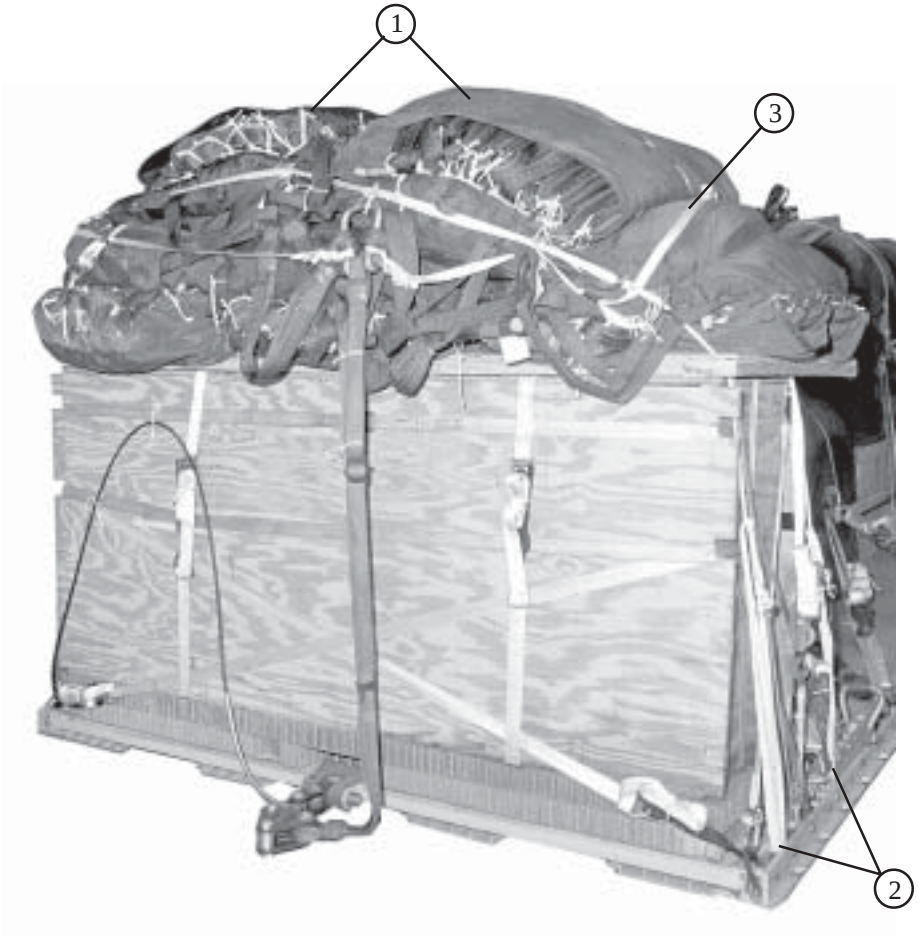

1. Prepare and position five G-11 parachutes according to FM 4-20.102/NAVSEA SS400-AB-MMO-010/TO 13C7-1-5.
2. Restrain the parachutes using bushings 55 and 55A on the platform and bushings 4 and 4A on the rear suspension link.
3. Install the multicut parachute release strap according to FM 4-20.102/NAVSEA SS400-AB-MMO-010/TO 13C7-1-5.

Figure 3-39. Parachute Stowage Platform Built and Positioned

INSTALLING THE EXTRACTION SYSTEM

3-41. Install the extraction system as shown in Figure 3-40.

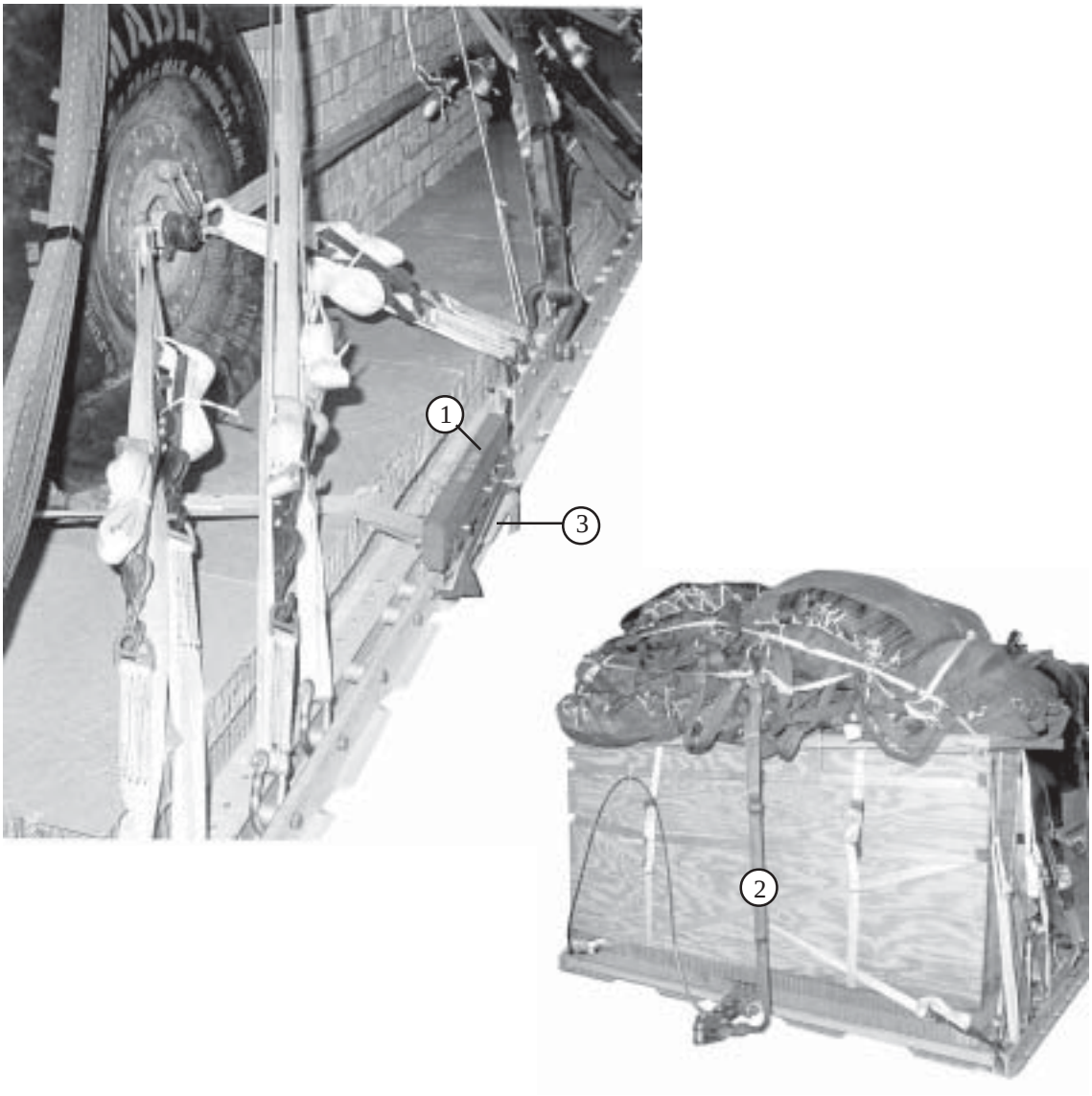

1. Install the extraction force transfer coupling according to FM 4-20.102/NAVSEA SS400-AB-MMO-010/TO 13C7-1-5.
2. Install a 9-foot (2-loop), type XXVI nylon sling as the deployment line.
3. Use the rear mounting holes for the EFTC actuator mounting bracket and a 28-foot cable.

Figure 3-40. Extraction System Installed

INSTALLING THE PARACHUTE RELEASE SYSTEM

3-42. Install the parachute release system as shown in Figure 3-41.

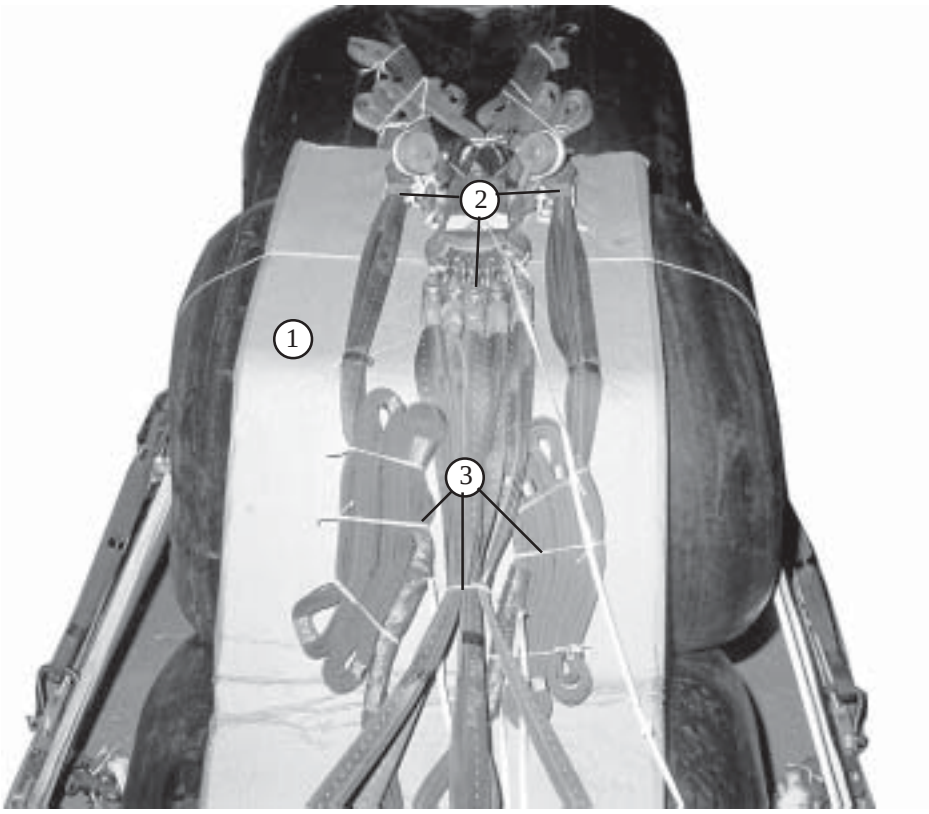

1. Place and secure a 96- by 24-inch piece of honeycomb from the separator to the top of the top rear drum.

2. Position and secure the M-2 parachute release assembly on the honeycomb. Attach the suspension slings and the parachute riser extensions to the M-2 parachute release assembly according to FM 4-20.102/NAVSEA SS400-AB-MMO-010/TO 13C7-1-5.

3. S-fold and tie any slack in the suspension slings with type I, 1/4-inch cotton webbing. Tie the riser extentions together with type I, 1/4-inch cotton webbing.

Figure 3-41. Parachute Release Assembly Installed

PLACING EXTRACTION PARACHUTE

3-43. Select the extraction parachute and extraction line needed using the extraction line requirements table in FM 4-20.102/NAVSEA SS400-AB-MMO-010/TO 13C7-1-5. Rig the extraction line in an extraction line bag according to TM 10-1670-286-20/TO 13C5-2-41. Place the extraction parachute and extraction line on the load for installation in the aircraft.

INSTALLING PROVISIONS FOR EMERGENCY RESTRAINTS

3-44. Select and install the provisions for emergency aft restraints according to the emergency aft restraint requirements table in FM 4-20.102/NAVSEA SS400-AB-MMO-010/TO 13C7-1-5.

MARKING RIGGED LOAD

3-45. Mark the rigged load according to FM 4-20.102/NAVSEA SS400-AB-MMO-010/TO 13C7-1-5 and as shown in Figure 3-42. Complete Shipper's Declaration for Dangerous Goods and affix to the load. If the load varies from the one shown, the weight, height, CB, tipoff curve, and parachute requirements must be recomputed.

EQUIPMENT REQUIRED

3-46. Use the equipment list in Table 3-2 to rig the load shown in Figure 3-42.

CAUTION:

Make the final inspection required by FM 4-20.102/NAVSEA SS400-AB-MMO-010/TO 13C7-1-5 before the load leaves the rigging site.

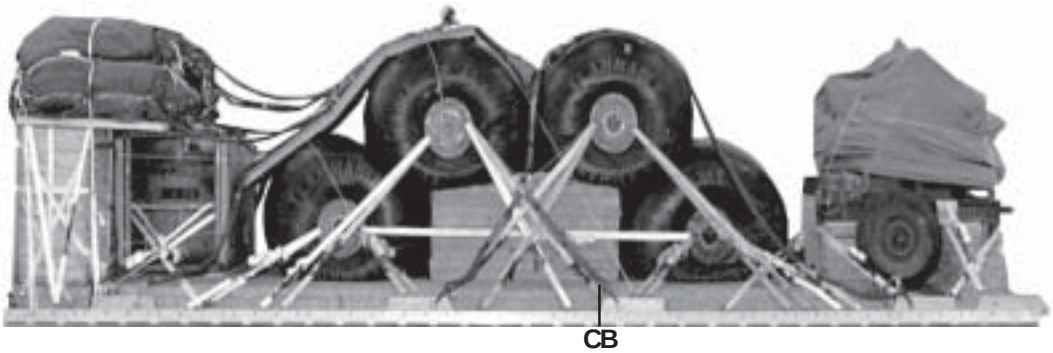

RIGGED LOAD DATA

Weight	24,408 pounds
Maximum Weight	25,700 pounds
Height	89 inches
Width	108 inches
Overall Length	363 inches
Overhang: Front (Tongue of Pump)	9 inches
Rear (EFTC)	18 inches
Center of Balance (CB) (from front edge of platform)	172 inches
Extraction System	EFTC

Figure 3-42. Four 500-Gallon Drums with Pump and Separator Rigged for Low-Velocity Airdrop

Table 3-2. Equipment Required for Rigging Four 500-Gallon Drums with Pump and Separator

Table 3-2. Equipment Required for Rigging Four 500-Gallon Drums with Pump and Separator (continued)

National Stock Number	Item	Quantity
1670-00-753-3928	Pad, energy-dissipating (honeycomb), 3- by 36- by 96-in	30 sheets
	Parachute:	
	Cargo:	
1670-01-016-7841	G-11C	5
	Cargo extraction:	
1670-00-040-8135	28-ft	1
	Drogue (for DES)	
1670-01-063-3715	15-ft	1
	Platform, airdrop, type V, 28-ft:	
1670-01-353-8425	Bracket assembly, coupling	(1)
1670-01-162-2372	Clevis assembly, type V	(68)
1670-01-162-2376	Extraction bracket assembly	(1)
1670-01-247-2389	Bracket, suspension	(8)
1670-01-162-2381	Tandem link assembly (Multipurpose link)	(2)
5530-00-128-4981	Plywood, 3/4-in	4 sheets
1670-01-097-8817	Release, cargo parachute, M-2	1
	Sling, cargo, airdrop	
	For suspension and lifting:	
1670-01-062-6306	3-ft (4-loop), type XXVI nylon webbing	6
1670-01-062-6305	9-ft (4-loop), type XXVI nylon webbing	2
1670-01-062-6308	16-ft (4-loop), type XXVI nylon webbing	2
1670-01-064-4453	20-ft (4-loop), type XXVI nylon webbing	2
	For deployment:	
1670-01-062-6304	9-ft (2-loop), type XXVI nylon webbing	1
	For riser extension:	
1670-01-062-6311	120-ft (2-loop), type XXVI nylon webbing	5
5340-00-040-8219	Strap, parachute release, multi-cut, comes w/ 2 knives	2
7510-00-266-5016	Tape, adhesive, 2-in	As required
1670-00266-6710	Tape, masking, 2-in	As required
1670-00-937-0271	Tie-down assembly, 15-foot	68
8310-00-917-3945	Thread, Cotton, Ticket 8/7	As required
	Webbing:	
8305-00-268-2411	Cotton, 1/4-in, type I	As required
8305-00-082-5752	Nylon, tubular, 1/2-in	As required
8305-00-263-3591	Nylon, Type VIII	As required

SECTION III- RIGGING FIVE 500-GALLON DRUMS

DESCRIPTION OF LOAD

3-47. The five collapsible fuel drums are rigged on a 32-foot, type V platform with six G-11 cargo parachutes. Each drum is filled with 432 gallons of liquid. When empty, each drum weighs 250 pounds and is 62 inches long and 53 inches in diameter. The five drums also have a 350-GPM pump with a separator and hose box as an accompanying load. The total rigged load has a maximum weight of 30,355 pounds with a width of 108 inches and length of 411 inches. It has an overhang of 18 inches in the front and 18 inches in the rear.

Notes:
1. For drums filled with a liquid other than water, use Table 1-1 to recompute the weight.
2. If the load varies from the one shown, the weight, height, CB, tipoff curve, and parachute requirements must be recomputed.
3. Do not pressurize drums with air.

PREPARING PLATFORM

3-48. Prepare a 32-foot type V airdrop platform using two tandem links, eight suspension brackets and 72 tie-down clevises as shown in Figure 3-43.

Notes:
1. The nose bumper may or may not be installed.
2. Measurements given in this section are from the front edge of the platform, NOT from the front edge of the nose bumper.

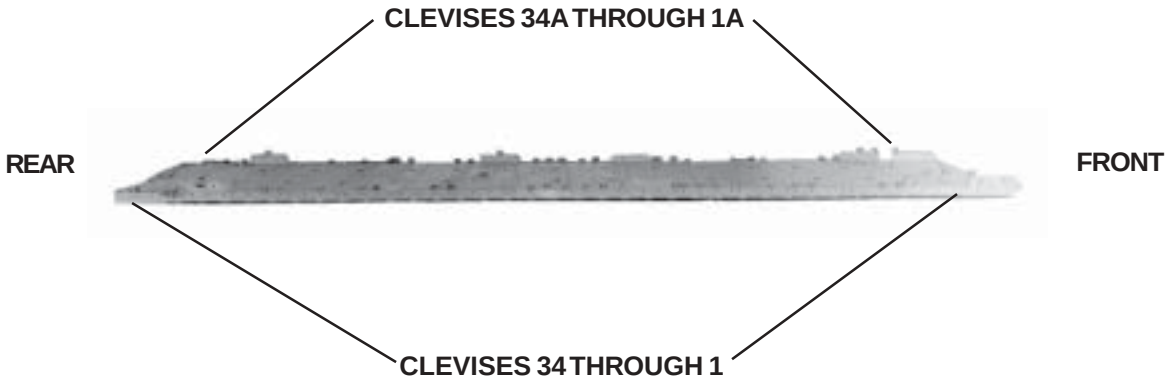

Steps:

1. Inspect, or assemble and inspect, the platform as outlined in TM 10-1670-268-20&P/TO 13C7-52-22.
2. Install a tandem link on the front of each platform side rail using holes 1, 2, and 3.
3. Install a suspension bracket to each platform side rail using holes 6, 7, and 8.
4. Install a suspension bracket to each platform side rail using holes 26, 27, and 28.
5. Install a suspension bracket to each platform side rail using holes 37, 38, and 39.
6. Install a suspension bracket to each platform side rail using holes 57, 58, and 59.
7. Install a tie-down clevis to bushing 4 on each front tandem link.
8. Install a tie-down clevis to bushings 1 and 3 on each of the first suspension brackets.
9. Install a tie-down clevis to bushing 2 of each of the third suspension brackets.
10. Install a tie-down clevis to bushing 2 (doubled) of each of the fourth suspension brackets.
11. Starting at the front of each platform side rail, install a tie-down clevis to the bushings bolted to holes 9, 10, 15, 16, 18, 22, 23, 24, 25, 30, 31, 33, 34, 35, 41, 42, 46, 47, 50, 53, 54 (doubled), 60 (tripled), 61, 62, 63, and 64 (doubled).
12. Starting at the front of the platform, number the clevises bolted to the right side from 1 through 34 and those bolted to the left side from 1A through 34A.

Figure 3-43. Platform Prepared

PREPARING HONEYCOMB

3-49. Build honeycomb stacks as shown in Figure 3-44.

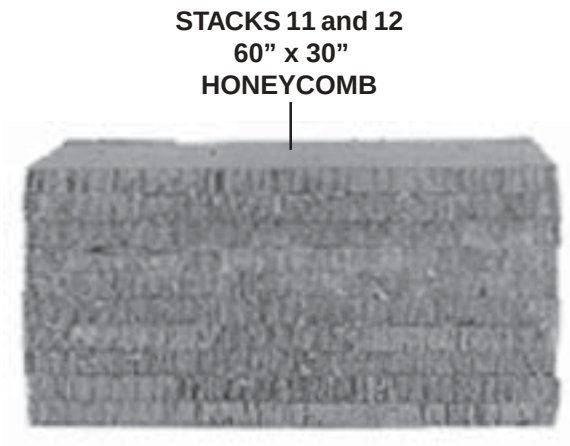

STACK NUMBER	PIECES	WIDTH (INCHES)	LENGTH (INCHES)	MATERIAL	INSTRUCTIONS
1					Prepare honeycomb stack 1 as shown in Figure 3-2.
2-10	2	96	36	Honeycomb	Glue layers together.
11-12	10	60	30	Honeycomb	Glue layers together.

Figure 3-44. Honeycomb Stacks Prepared

POSITIONING HONEYCOMB STACKS

3-50. Position honeycomb stacks as shown in Figure 3-45.

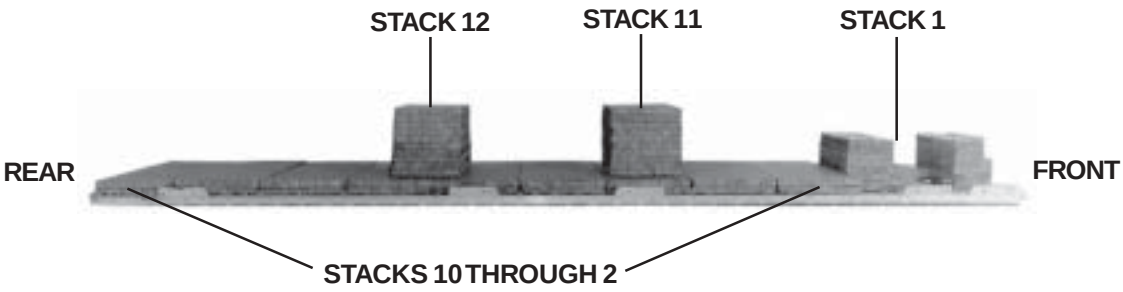

1. Position stack 1 on the front edge of the platform and centered.
2. Position stacks 2 through 10 flush on the rear edge of stack 1 and flush with each other.
3. Position stack 11 on top of stack 4 centered left to right and ensure the 30 inch length is aligned with the side rails (do not glue).
4. Position stack 12 on top of stacks 6 and 7 centered left to right and ensure the 30 inch length is aligned with the side rails (do not glue).

NOTE: Stacks 11 and 12 may need to be adjusted to allow for placement of the drums.

Figure 3-45. Honeycomb Stacks Positioned

BUILDING EQUIPMENT HOSE BOX

3-51. Build the equipment box as shown in Figure 3-5.

POSITIONING EQUIPMENT HOSE BOX

3-52. Position the equipment hose box as shown in Figure 3-6.

STORING EQUIPMENT IN THE EQUIPMENT HOSE BOX

3-53. Store the equipment in the equipment hose box as shown in Figure 3-7.

LASHING EQUIPMENT HOSE BOX TO PLATFORM

3-54. Lash the equipment hose box to the platform as shown in Figures 3-46 and 3-47.

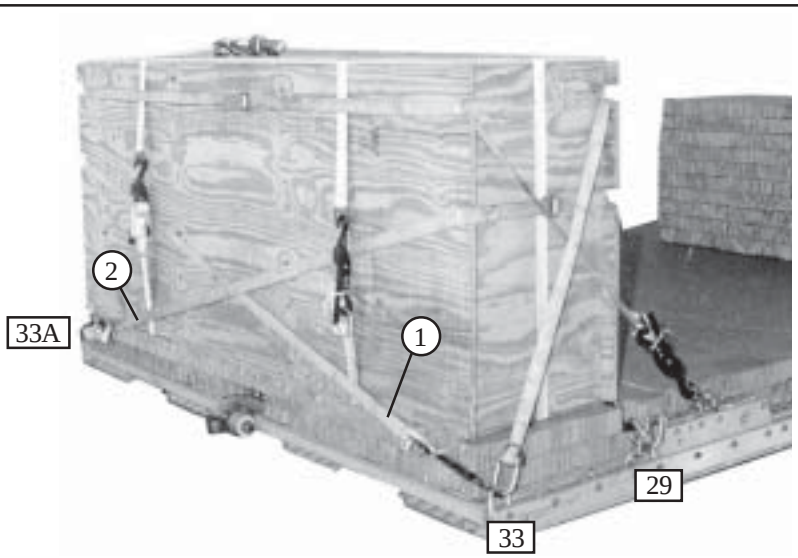

Figure 3-46. Lashings 1 and 2 Installed

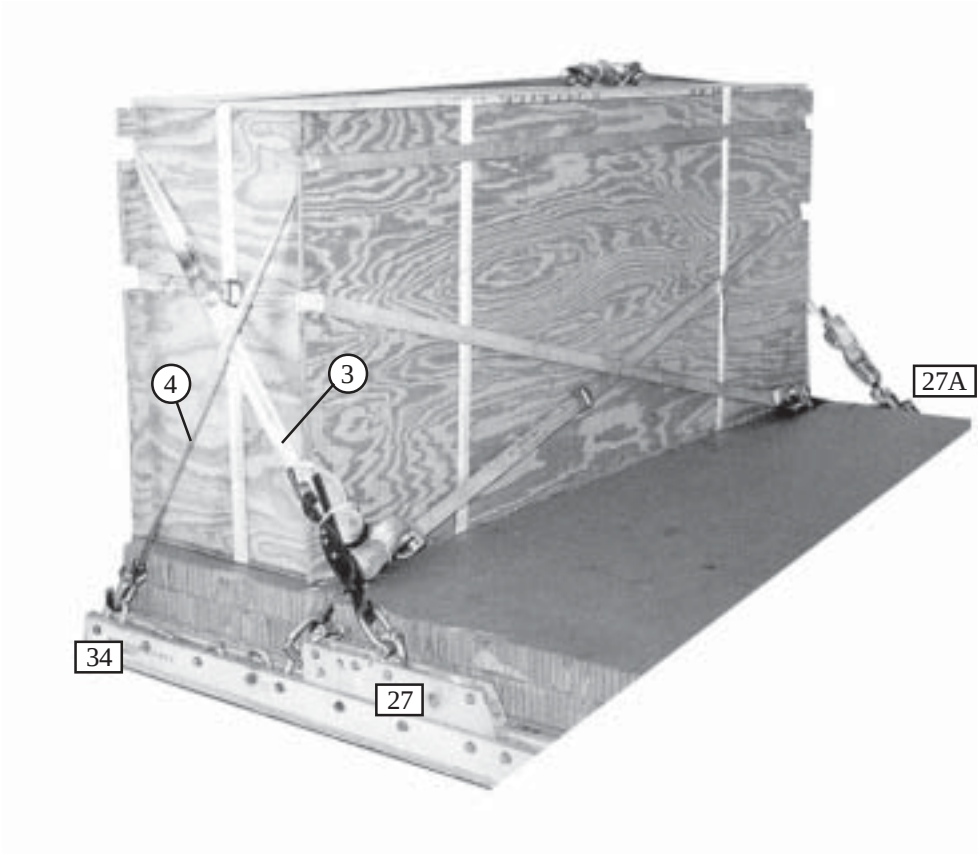

Lashing Number	Tie-down Clevis Number	Instructions
3	27 and 27A	Route a 30-foot lashing from clevis 27 to the rear top cutouts to clevis 27A. Load bind to both clevises.
4	34 and 34A	Route a lashing through it's own D-ring on clevis 34 to the top front cutouts to clevis 34A.

Figure 3-47. Lashings 3 and 4 Installed

PREPARING AND POSITIONING FUEL SEPARATOR

3-55. Prepare and position the fuel separator as shown in Figure 3-10.

LASHING FUEL SEPARATOR TO PLATFORM

3-56. Lash fuel separator to the platform as shown in Figure 3-48.

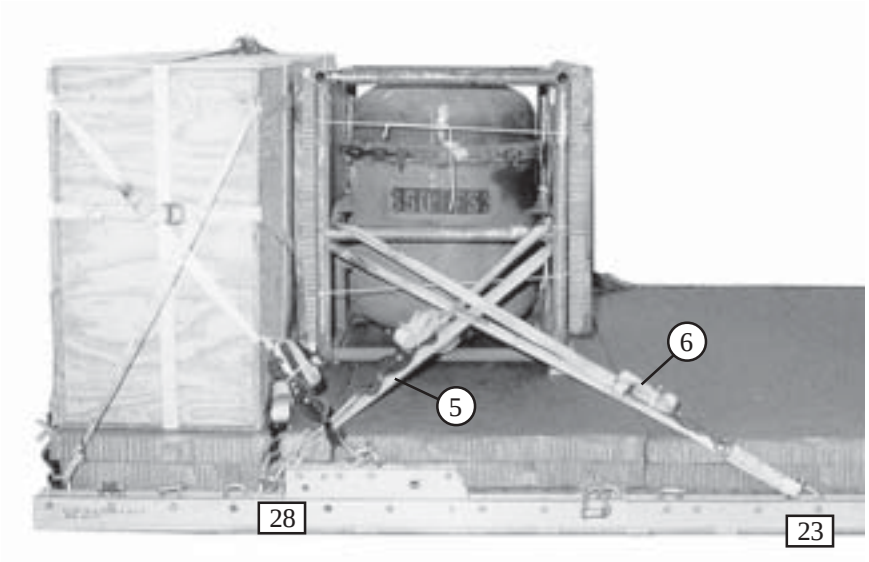

Lashing Number	Tie-down Clevis Number	Instructions
5	28	Route a lashing from clevis 28 around the front right middle cross member.
6	28A	Route a lashing from clevis 28A around the front left middle cross member.
7	23	Route a lashing from clevis 23 around the rear right middle cross member.
8	23A	Route a lashing from clevis 23A around the rear left middle cross member.

Figure 3-48. Lashings 5 through 8 Installed

POSITIONING AND LASHING THE DRUMS

3-57. Position and lash the drums to the platform as shown in Figures 3-49 through 3-55.

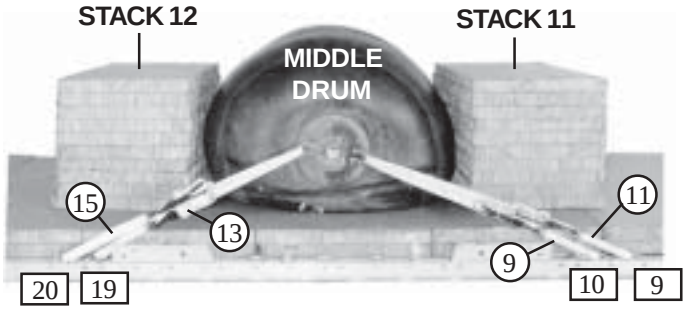

Steps:

1. Place a platform clevis on one end of two 9-foot (2-loop), type XXVI nylon webbing slings. Attach the slings to each side of the drum (for lifting purpose only) and remove after the drum is positioned (not shown).

2. Position the middle drum centered between stacks 11 and 12, and left to right on the platform. Stacks 11 and 12 may need to be moved during placement.

Lashing Number	Tie-down Clevis Number	Instructions
9	10	Route a lashing from clevis 10 to the right front shackle of the drum.
10	10A	Route a lashing from clevis 10A to the left front shackle of the drum.
11	9	Route a lashing from clevis 9 to the right front shackle of the drum.
12	9A	Route a lashing from clevis 9A to the left front shackle of the drum.
13	19	Route a lashing from clevis 19 to the right rear shackle of the drum.
14	19A	Route a lashing from clevis 19A to the left rear shackle of the drum.
15	20	Route a lashing from clevis 20 to the right rear shackle of the drum.
16	20A	Route a lashing from clevis 19A to the left rear shackle of the drum.

Figure 3-49. Lashings 9 Through 16 Installed

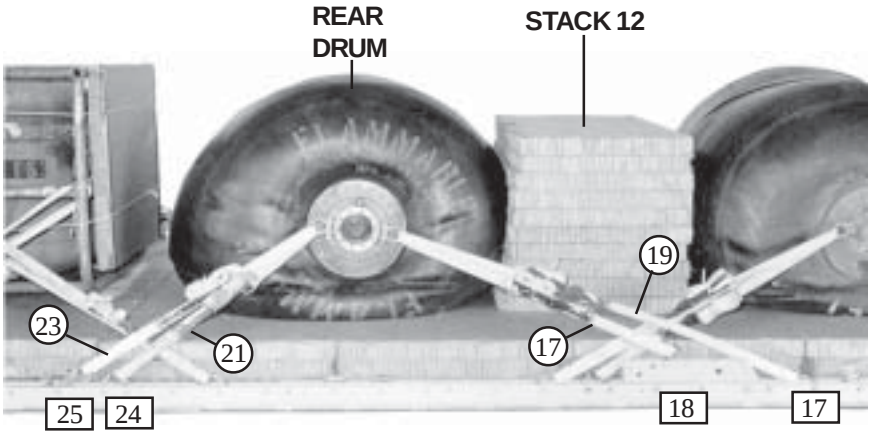

Steps:

1. Place a platform clevis on one end of two 9-foot (2-loop), type XXVI nylon webbing slings. Attach the slings to each side of the drum, for lifting purpose only, and remove after the drum is positioned (not shown).

2. Position the rear drum to the rear of stack 12 centered, and left to right on the platform.

Lashing Number	Tie-down Clevis Number	Instructions
17	18	Route a lashing from clevis 18 to the right front shackle of the drum.
18	18A	Route a lashing from clevis 18A to the left front shackle of the drum.
19	17	Route a lashing from clevis 17 to the right front shackle of the drum.
20	17A	Route a lashing from clevis 17A to the left front shackle of the drum.
21	24	Route a lashing from clevis 24 to the right rear shackle of the drum.
22	24A	Route a lashing from clevis 24A to the left rear shackle of the drum.
23	25	Route a lashing from clevis 25 to the right rear shackle of the drum.
24	25A	Route a lashing from clevis 25A to the left rear shackle of the drum.

Figure 3-49. Lashings 17 Through 24 Installed

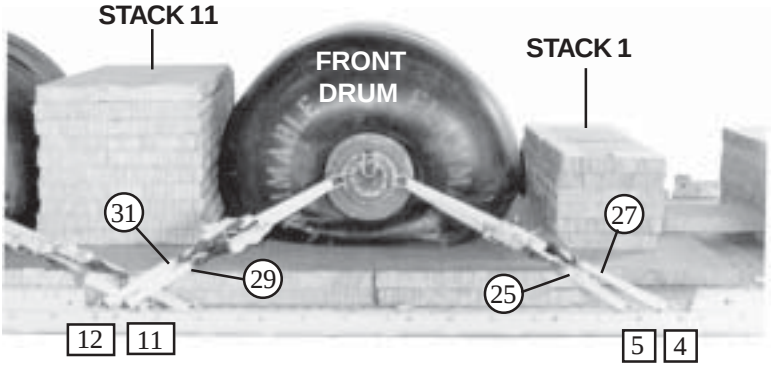

Steps:

1. Place a platform clevis on one end of two 9-foot (2-loop), type XXVI nylon webbing slings. Attach the slings to each side of the drum (for lifting purpose only) and remove after the drum is positioned (not shown).

2. Position the front drum between stacks 1 and 11 and centered from left to right on the platform. Stacks 11 and 12 may need to be moved during placement.

Lashing Number	Tie-down Clevis Number	Instructions
25	5	Route a lashing from clevis 5 to the right front shackle of the drum.
26	5A	Route a lashing from clevis 5A to the left front shackle of the drum.
27	4	Route a lashing from clevis 4 to the right front shackle of the drum.
28	4A	Route a lashing from clevis 4A to the left front shackle of the drum.
29	11	Route a lashing from clevis 11 to the right rear shackle of the drum.
30	11A	Route a lashing from clevis 11A to the left rear shackle of the drum.
31	12	Route a lashing from clevis 12 to the right rear shackle of the drum.
32	12A	Route a lashing from clevis 12A to the left rear shackle of the drum.

Figure 3-51. Lashings 25 Through 32 Installed

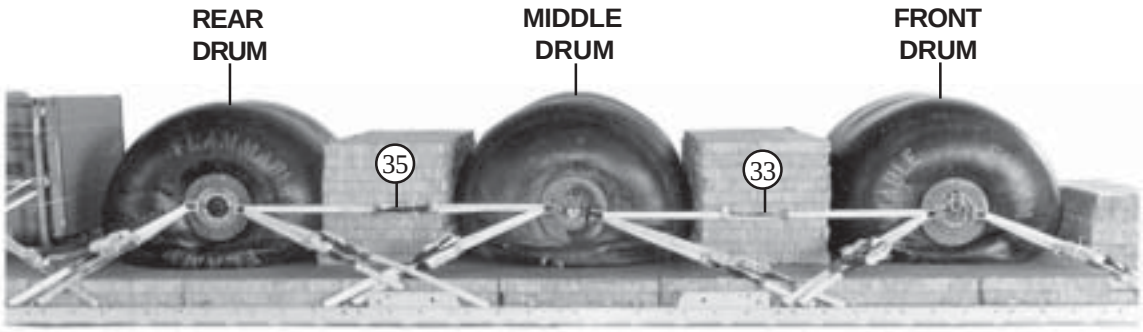

Lashing Number	Tie-down Clevis Number	Instructions
33		Route a lashing from the right front shackle of the middle drum to the right rear shackle of the front drum.
34		Route a lashing from the left front shackle of the middle drum to the left rear shackle of the front drum.
35		Route a lashing from the right rear shackle of the middle drum to the right front shackle of the rear drum.
36		Route a lashing from the left rear shackle of the middle drum to the left front shackle of the rear drum.

Figure 3-52. Lashings 33 Through 36 Installed

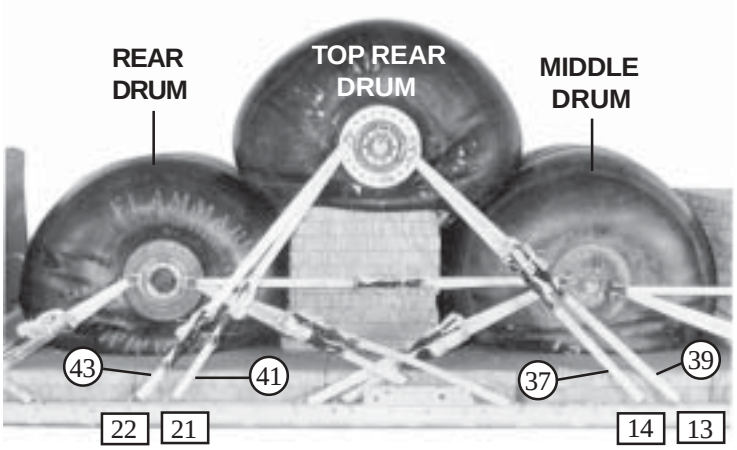

Steps:

1. Place a platform clevis on one end of two 9-foot (2-loop), type XXVI nylon webbing slings. Attach the slings to each side of the drum (for lifting purpose only) and remove after the drum is positioned (not shown).

2. Position the top rear drum on stack 12 and centered from left to right on the platform.

Lashing Number	Tie-down Clevis Number	Instructions
37	14	Route a lashing from clevis 14 to the right front shackle of the drum.
38	14A	Route a lashing from clevis 14A to the left front shackle of the drum.
39	13	Route a lashing from clevis 13 to the right front shackle of the drum.
40	13A	Route a lashing from clevis 13A to the left front shackle of the drum.
41	21	Route a lashing from clevis 21 to the right rear shackle of the drum.
42	21A	Route a lashing from clevis 21A to the left rear shackle of the drum.
43	22	Route a lashing from clevis 22 to the right rear shackle of the drum.
44	22A	Route a lashing from clevis 22A to the left rear shackle of the drum.

Figure 3-53. Lashings 37 Through 44 Installed

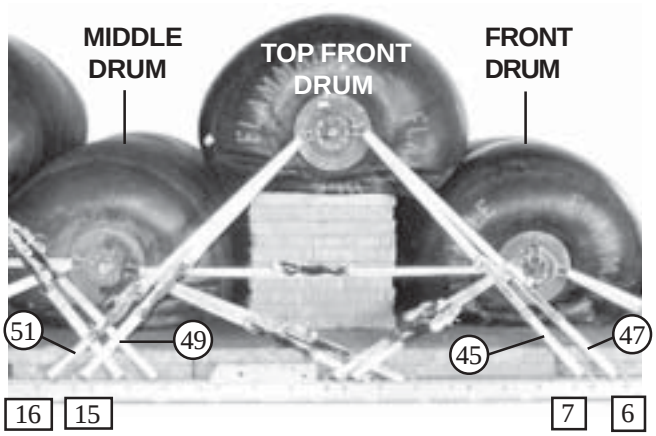

Steps:

1. Place a platform clevis on one end of two 9-foot (2-loop), type XXVI nylon webbing slings. Attach the slings to each side of the drum (for lifting purpose only) and remove after the drum is positioned (not shown).

2. Position the top front drum on stack 11 and centered from left to right on the platform.

Lashing Number	Tie-down Clevis Number	Instructions
45	7	Route a lashing from clevis 7 to the right front shackle of the drum.
46	7A	Route a lashing from clevis 7A to the left front shackle of the drum.
47	6	Route a lashing from clevis 6 to the right front shackle of the drum.
48	6A	Route a lashing from clevis 6A to the left front shackle of the drum.
49	15	Route a lashing from clevis 15 to the right rear shackle of the drum.
50	15A	Route a lashing from clevis 15A to the left rear shackle of the drum.
51	16	Route a lashing from clevis 16 to the right rear shackle of the drum.
52	16A	Route a lashing from clevis 16A to the left rear shackle of the drum.

Figure 3-54. Lashings 45 Through 52 Installed

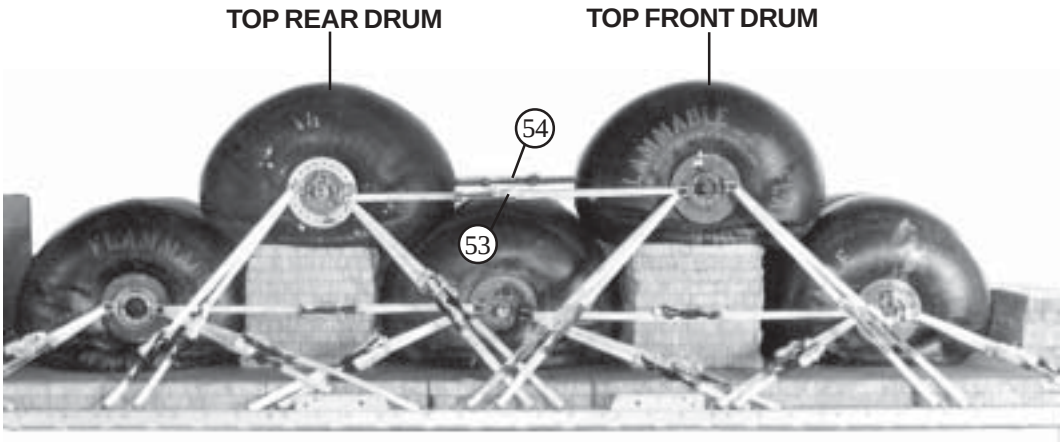

Lashing Number	Tie-down Clevis Number	Instructions
53		Route a lashing from the right front shackle of the top rear drum to the right rear shackle of the top front drum.
54		Route a lashing from the left front shackle of the top rear drum to the left rear shackle of the top front drum.

Figure 3-55. Lashings 53 and 54 Installed

PREPARING AND POSITIONING PUMP

3-58. Prepare the pump according to paragraph 2-5 and as shown in Figure 2-8. Position the pump as shown in Figure 3-14.

LASHING THE PUMP TO THE PLATFORM

3-59. Lash the pump to the platform as shown in Figure 3-56.

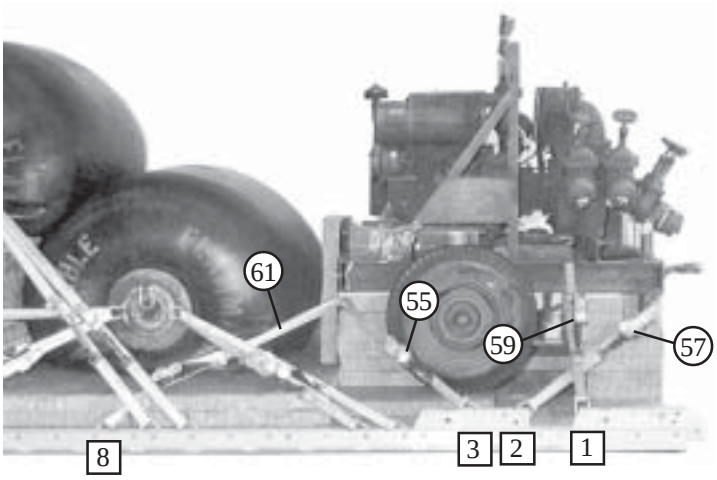

Lashing Number	Tie-down Clevis Number	Instructions
55	3	Route a lashing from clevis 3 to the right rear tiedown point.
56	3A	Route a lashing from clevis 3A to the left rear tiedown point.
57	2	Route a lashing from clevis 2 to the right front tiedown point.
58	2A	Route a lashing from clevis 2A to the left front tiedown point.
59	1	Route a lashing from clevis 1 to the right side frame.
60	1A	Route a lashing from clevis 1A to the left side frame.
61	8	Route a lashing from clevis 8 to the right rear tiedown point.
62	8A	Route a lashing from clevis 8A to the left rear tiedown point.

Figure 3-56. Lashings 55 Through 62 Installed

INSTALLING SUSPENSION SLINGS AND SAFETY TIES

3-60. Install suspension slings and safety ties as shown in Figure 3-57.

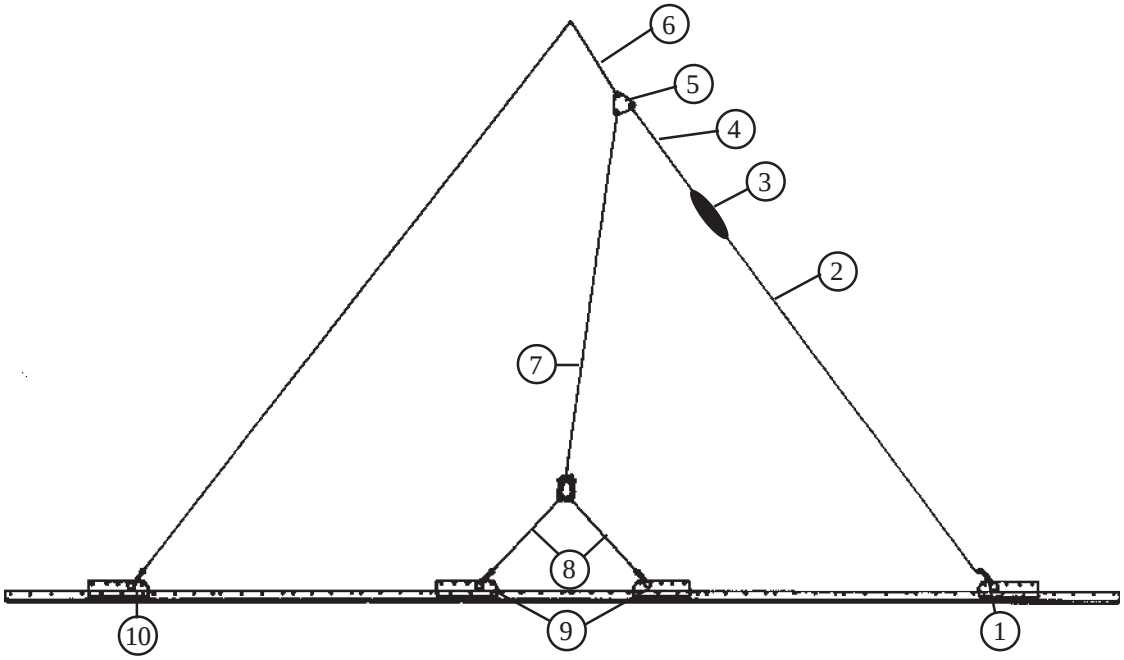

1. Attach a large clevis to the first right suspension bracket.
2. Place a large clevis in one end of a 12-foot (4-loop), type XXVI nylon suspension sling. Attach the clevis to the clevis in step 1. Safety them together with type III nylon cord using an hourglass tie.
3. Attach the running end of the 12-foot sling to a 5 1/2-inch 2-point link.
4. Attach a 3-foot (4-loop), type XXVI nylon suspension sling to the 2-point link.
5. Attach a 3-point link to the 3-foot sling.
6. Attach a 3-foot (4-loop), type XXVI nylon suspension sling to the 3-point link.
7. Fold in half a 20-foot (2-loop), type XXVI nylon suspension sling on the final corner of the 3-point link.
8. Attach two 3-foot (4-loop), type XXVI nylon suspension slings to a large clevis and attach this clevis to the running ends of the folded 20-foot sling.

Figure 3-57. Suspension Slings and Safety Ties Installed

9. Attach one large clevis to each running end of the two 3-foot slings and attach one clevis to each second and third suspension brackets.

10. Place a large clevis in one end of a 20-foot (4-loop), type XXVI nylon suspension sling and attach the clevis to the right rear suspension bracket.

11. Repeat steps 1 through 10 for the left side of the platform.

12. Raise the suspension slings and install the suspension sling safety ties as shown in Appendix A, to the front and rear suspension slings, six to eight inches above the highest point of the load (not shown).

13. Pad and tape the link assemblies (not shown).

Figure 3-57. Suspension Slings and Safety Ties Installed (Continued)

COVERING THE PUMP

3-61. Place a canvas cover over the pump as shown in Figure 3-16.

BUILDING AND POSITIONING PARACHUTE STOWAGE PLATFORM

3-62. Build and position stowage platform as shown in Figure 3-58. Align the rear edge of the stowage platform on the rear edge of the box.

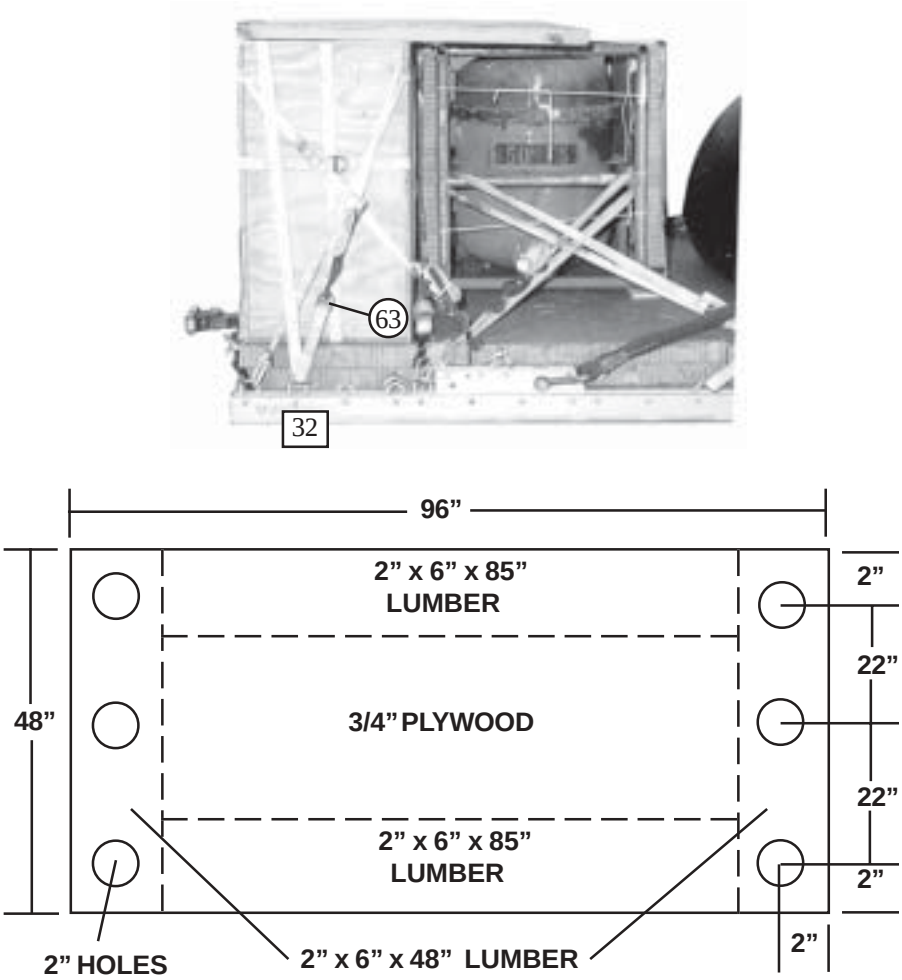

Lashing Number	Tie-down Clevis Number	Instructions
63	32	Route a lashing from clevis 32 through the rear and center right holes in the stowage platform.
64	32A	Route a lashing from clevis 32A through the rear and center left holes in the stowage platform.

Figure 3-58. Parachute Stowage Platform Built and Positioned

PREPARING AND STOWING CARGO PARACHUTES

3-63. Prepare and stow cago parachutes as shown in Figure 3-59.

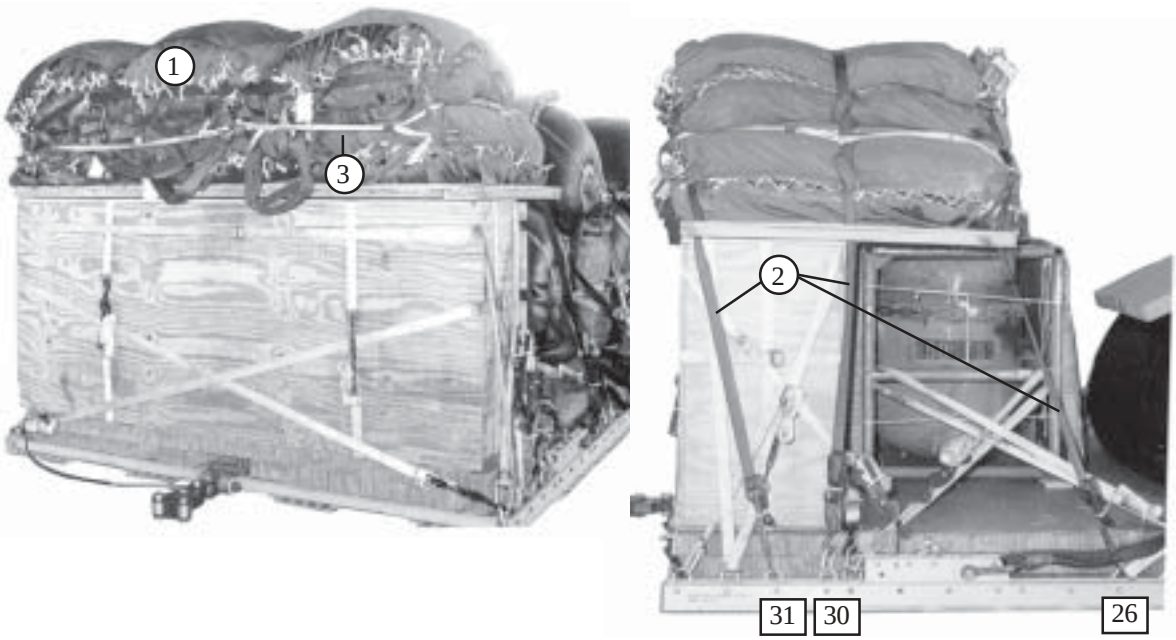

1. Prepare and position six G-11 cargo parachutes according to FM 4-20.102/NAVSEA SS400-AB-MMO-010/TO 13C7-1-5.
2. Restrain the parachutes according to FM 4-20.102/NAVSEA SS400-AB-MMO-010/TO 13C7-1-5 using clevises 26, 26A, 30, 30A, 31, and 31A.
3. Install the multicut parachute release strap according to FM 4-20.102/NAVSEA SS400-AB-MMO-010/TO 13C7-1-5.

Figure 3-59. Cargo Parachutes Prepared and Stowed

INSTALLING THE EXTRACTION SYSTEM

3-64. Install the extraction system as shown in Figure 3-60.

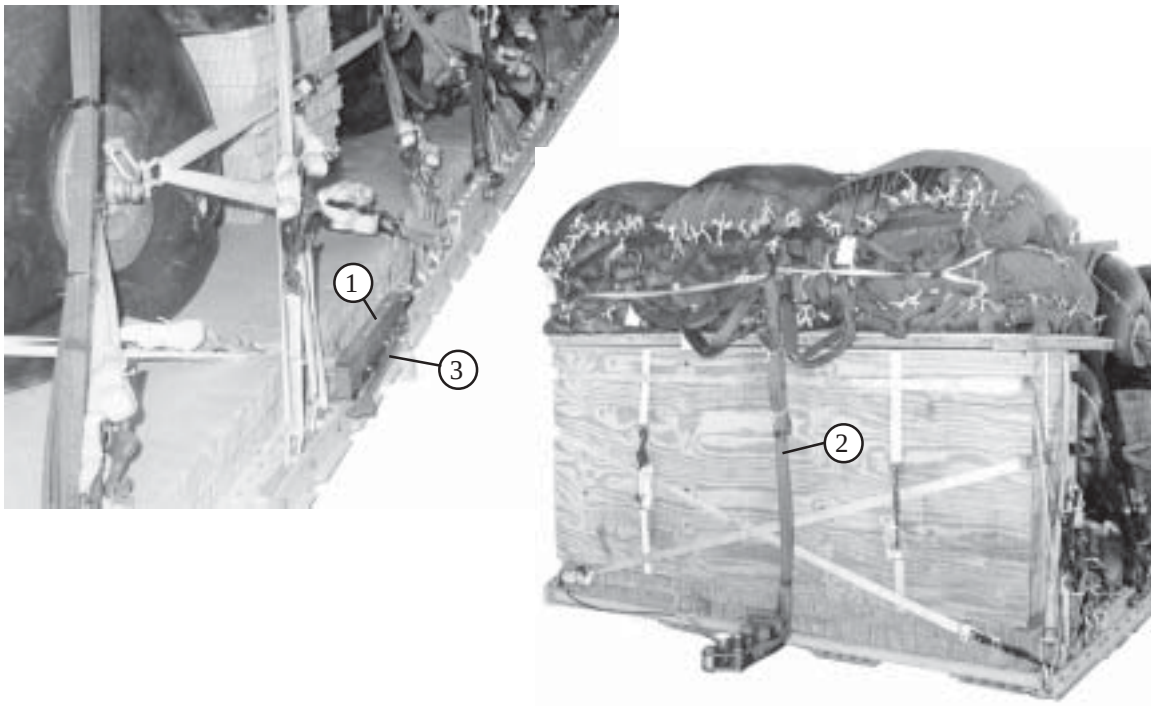

1. Install the extraction force transfer coupling according to FM 4-20.102/NAVSEA SS400-AB-MMO-010/TO 13C7-1-5.
2. Install a 9-foot (2-loop) type XXVI nylon sling as the deployment line.
3. Use the rear mounting holes for the EFTC actuator mounting bracket and a 28-foot cable.

Figure 3-60. Extraction System Installed

INSTALLING THE PARACHUTE RELEASE SYSTEM

3-65. Install the release system as shown in Figure 3-61.

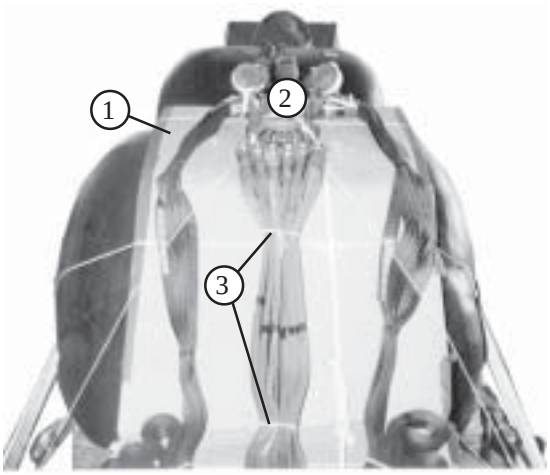

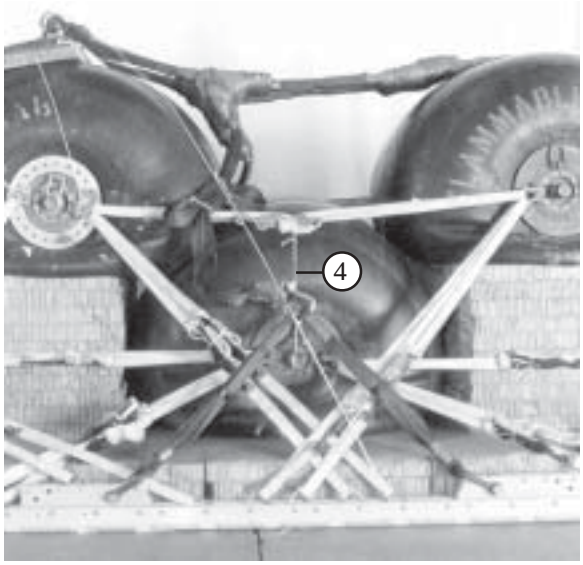

1. Place and secure a 96-inch by 36-inch piece of honeycomb from the separator to the top of the rear drum, securing it with type III nylon cord.
2. Position and secure the M-2 parachute release assembly on the honeycomb. Attach the suspension slings and the parachute riser extensions to the M-2 parachute release assembly according to FM 4-20.102/NAVSEA SS400-AB MMO-010/TO 13C7-1-5.
3. S-fold and tie any slack in the suspension slings with type I, 1/4-inch cotton webbing (not shown). Tie the riser extensions together with type I, 1/4-inch cotton webbing.
4. Secure the large clevis attached to the folded 20-foot suspension sling to the lashing installed between the top two drums with a piece of type III nylon cord.

Figure 3-61. Release System Installed

PLACING EXTRACTION PARACHUTE

3-66. Select the extraction parachute and extraction line needed using the extraction line requirements table in FM 4-20.102/NAVSEA SS400-AB-MMO-010/TO 13C7-1-5. Rig the extraction line in an extraction line bag according to TM 10-1670-286-20/TO 13C5-2-41. Place the extraction parachute and extraction line on the load for installation in the aircraft.

INSTALLING PROVISIONS FOR EMERGENCY RESTRAINTS

3-67. Select and install the provisions for emergency aft restraints according to the emergency aft restraint requirements table in FM 4-20.102/NAVSEA SS400-AB-MMO-010/TO 13C7-1-5.

MARKING RIGGED LOAD

3-68. Mark the rigged load according to FM 4-20.102/NAVSEA SS400-AB-MMO-010/TO 13C7-1-5 and as shown in Figure 3-62. Complete Shipper's Declaration for Dangerous Goods and affix to the load. If the load varies from the one shown, the weight, height, CB, tipoff curve, and parachute requirements must be recomputed.

EQUIPMENT REQUIRED

3-69. Use the equipment list in Table 3-3 to rig the load shown in Figure 3-62.

CAUTION

Make the final inspection required by FM 4-20.102/NAVSEA SS400-AB-MMO-010/TO 13C7-1-5 before the load leaves the rigging site.

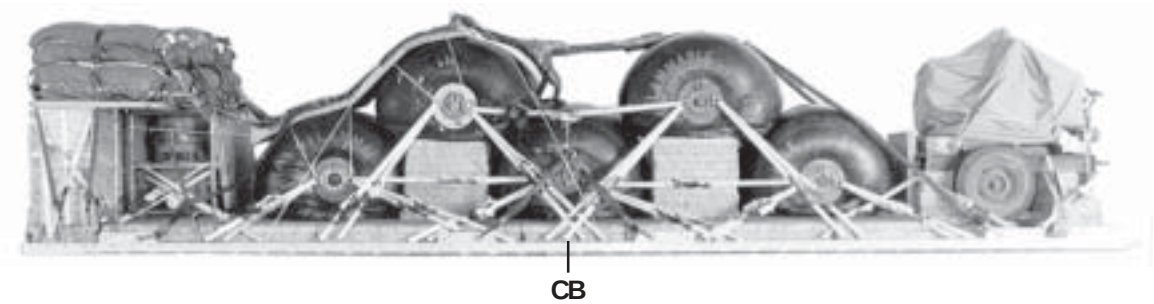

RIGGED LOAD DATA

Weight ..... **28,855 pounds**

Maximum Weight ..... **30,355 pounds**

Height ..... **75 inches**

Width ..... **108 inches**

Overall Length ..... **411 inches**

Overhang: Front (Tongue of pump) ..... **9 inches**
Rear (EFTC) ..... **18 inches**

Center of Balance (CB) (from the front edge of the platform) ..... **198 inches**

Figure 3-62. Five 500-Gallon Drums With Pump and Separator Rigged for Low-Velocity Airdrop

Table 3-3. Equipment Required for Rigging Five 500-Gallon Drums with Pump and Separator

National Stock Number	Item	Quantity
8040-00-273-8713	Adhesive paste, 1-gal	As required
1670-01-035-6054	Bridle, extraction line bag (for DES)	1
4030-00-090-5354	Clevis, large	13
4030-00-678-8562	Clevis, medium	6
8305-00-880-8155	Cloth coated, green, 60-inch	As required
4020-00-240-2146	Cord, nylon, type III, 550-lb	As required
1670-01-326-7309	Coupling, airdrop, extraction force transfer w/28-ft	1
1670-00-360-0328	Cover, clevis, large	6
8135-00-664-6958	Cushioning material, packaging, cellulose wadding	As required
1670-01-183-2678	Leaf, extraction line (line bag)(add 2 for DES)	2
	Line, drogue (for C-17)	
1670-01-064-4452	60-foot (1-loop), type XXVI	1
	Line, deployment:	
1670-01-062-6304	9-foot (2-loop), type XXVI	1
	Line, extraction:	
1670-01-062-6313	For C-130: 60-foot (3-loop), type XXVI	1
1670-01-107-7651	For C-141,C-5, C-17: 140-foot (3-loop), type XXVI	1
	Link assembly:	
	Two-point:	
5306-00-435-8994	Bolt, 1-in diam, 4-in long	4
5310-00-232-5165	Nut, 1-in, hexagonal	4
1670-00-003-1954	Plate, side, 5 1/2-in	4
5365-00-007-3414	Spacer, large	4
	Two-point: (for DES)	
5306-00-435-8994	Bolt, 1-in diam, 4-in long	2
5310-00-232-5165	Nut, 1-in, hexagonal	2
1670-00-003-1953	Plate, side, 3 3/4-in	2
5365-00-007-3414	Spacer, large	2

Table 3-3. Equipment Required for Rigging Five 500-Gallon Drums with Pump and Separator (Continued)

National Stock Number	Item	Quantity
1670-01-307-1055	Three-point	2
1670-00-006-2752	Four-point	1
1670-01-483-8259	Link, tow release mechanism (H-Block) C-17 aircraft	1
	Lumber:	
5510-00-220-6146	2- by 4-in	As required
5510-00-220-6148	2- by 6-in	As required
5315-00-010-4659	Nail, steel wire, common, 8d	As required
1670-00-753-3928	Pad, energy dissipating, honeycomb, 3- by 36- by 96-in	38 sheets
	Parachute:	
1670-01-016-7841	Cargo, G-11C	6
1670-00-040-8135	Cargo, extraction, 28ft	2
1670-01-063-3715	Drogue, 15ft (for DES)	1
	Platform, airdrop, type V, 32-foot:	
1670-01-353-8425	Bracket assembly, component, (EFTC)	(1)
167001-247-2389	Bracket, suspension	(8)
1670-01-162-2372	Clevis assembly, type V	(72)
1670-01-353-8424	Extraction bracket assembly	(1)
1670-01-162-2381	Link, tandem, suspension link assembly	(2)
5530-00-618-8073	Plywood, 3/4- by 48- by 96-in	4 sheets
1670-01-097-8817	Release, cargo parachute, M-2	1
	Sling, cargo airdrop	
	For suspension:	
1670-01-062-6306	3-ft (4-loop), type XXVI nylon webbing	8
1670-01-062-6307	12-ft (4-loop), type XXVI nylon webbing	2
1670-01-064-4453	20-ft (4-loop), typeXXVI nylon webbing	2
1670-01-062-6302	20-ft (2-loop), type XXVI nylon webbing	2
	For riser extension:	
1670-01-062-6311	120-ft (2-loop), type XXVI nylon webbing	6
1670-00-040-8219	Strap, parachute release, multicut	2

Table 3-3. Equipment Required for Rigging Five 500-Gallon Drums with Pump and Separator (Continued)

National Stock Number	Item	Quantity
7510-00-266-5016	Tape, adhesive, 2-in	As required
7510-00-266-6710	Tape, masking, 2-in	As required
1670-00-937-0271	Tie-down assembly, 15-ft	61
	Webbing:	
8305-00-268-2411	Cotton, 1/4-in, type I	As required
8305-00-082-5752	Nylon, tubular, 1/2-in	As required
8305-00-260-6890	Type X	As required

SECTION IV- RIGGING SIX 500-GALLON DRUMS

DESCRIPTION OF LOAD

3-70. The six collapsible fuel drums are rigged on a 32-foot, type V platform with seven G-11 cargo parachutes. Each drum is filled with 432 gallons of liquid. When empty, each drum weighs 250 pounds and is 62 inches long and 53 inches in diameter. The six drums also have a 350-GPM pump with a separator and hose box as an accompanying load. The total rigged load has a maximum weight of 34,480 pounds with a width of 108 inches and length of 411 inches. It has an overhang of 9 inches in the front and 18 inches in the rear.

Notes:
1. For drums filled with liquid other than water, use Table 1-1 to recompute the weight.
2. If the load varies from the shown, the weight, height, CB, tipoff curve, and parachute requirements must be recomputed.
3. Do not pressurize drums with air.

PREPARING PLATFORM

3-71. Prepare a 32-foot type V airdrop platform using two tandem links, eight suspension brackets and 80 tie-down clevises as shown in Figure 3-63.

Notes:
1. The nose bumper may or may not be installed.
2. Measurements given in this section are from the front edge of the platform, NOT from the front edge of the nose bumper.

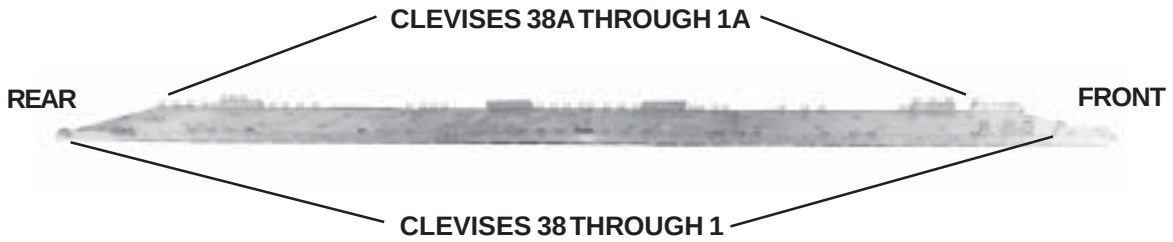

Steps:

1. Inspect, or assemble and inspect, the platform as outlined in TM 10-1670-268-20&P/TO 13C7-52-22.
2. Install a tandem link on the front of each platform side rail using holes 1, 2, and 3.
3. Install a suspension bracket to each platform side rail using holes 6, 7, and 8.
4. Install a suspension bracket to each platform side rail using holes 26, 27, and 28.
5. Install a suspension bracket to each platform side rail using holes 37, 38, and 39.
6. Install a suspension bracket to each platform side rail using holes 57, 58, and 59.
7. Install a tie-down clevis to bushings 4 on each front tandem link.
8. Install a tie-down clevis to bushings 1, 3 and 4 on each of the first suspension brackets.
9. Install a tie-down clevis to bushings 2, 3, and 4 of each of the fourth suspension brackets.
10. Starting at the front of each platform side rail, install a tie-down clevis to the bushings bolted to holes 9, 15, 16, 18, 22, 23, 24, 25, 29, 30, 31, 32, 33, 34, 35, 36, 43, 44, 45, 46, 53, 54, 55, 56, 60 (doubled), 61 (tripled), 62, 63, and 64 (doubled).
11. Starting at the front of the platform, number the clevises bolted to the right side from 1 through 38 and those bolted to the left side from 1A through 38A.

Figure 3-63. Platform Prepared

PREPARING HONEYCOMB

3-72. Build honeycomb stacks as shown in Figure 3-64.

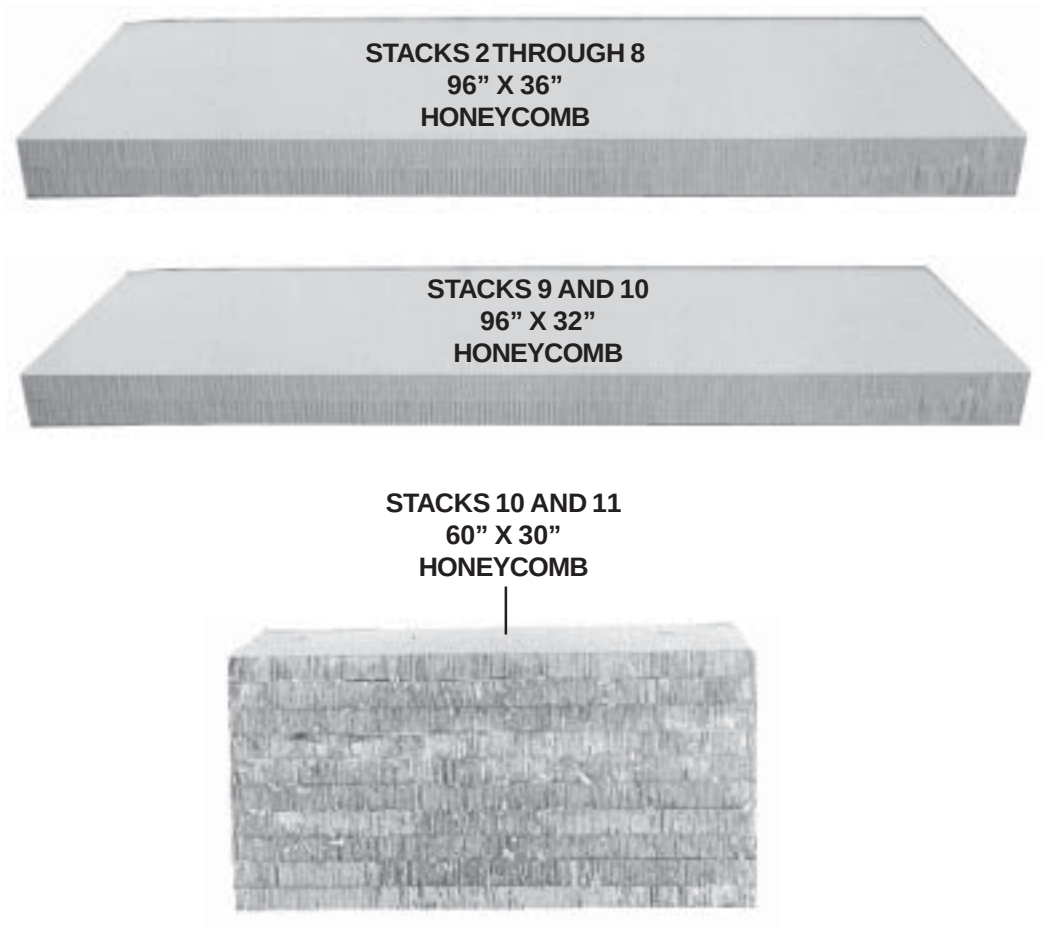

STACK NUMBER	PIECES	WIDTH (INCHES)	LENGTH (INCHES)	MATERIAL	INSTRUCTIONS
1					Prepare honeycomb stack 1 as shown in Figure 3-2.
2-8	2	96	36	Honeycomb	Glue layers together.
9-10	2	96	32	Honeycomb	Glue layers together.
11-12	10	60	30	Honeycomb	Glue layers together.

Figure 3-64. Honeycomb Stacks Prepared

POSITIONING HONEYCOMB STACKS

3-73. Position honeycomb stacks as shown in Figure 3-65.

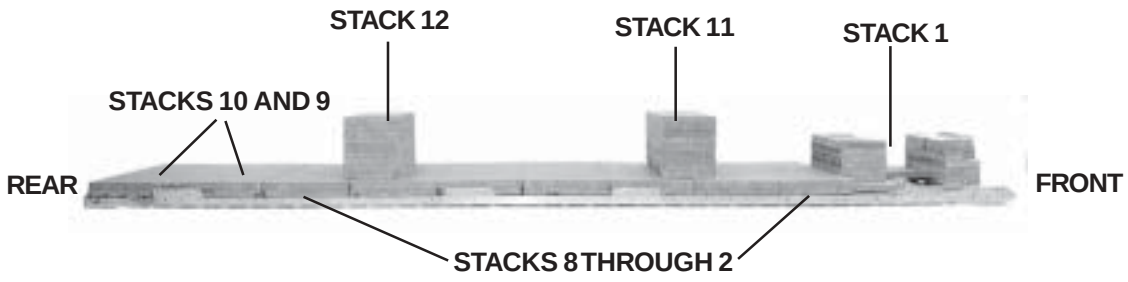

1. Position stack 1 on the front edge of the platform and centered.
2. Position stacks 2 through 10 flush on the rear edge of stack 1 and flush with each other.
3. Position stack 11 at 122 inches from the front of the platform and centered left to right. Ensure the 30 inch length is aligned with the side rails (do not glue).
4. Position stack 12 at 257 inches from the front of the platform and centered left to right. Ensure the 30 inch length is aligned with the side rails (do not glue).

NOTE: Stacks 11 and 12 may need to be adjusted to allow for placement of the drums.

Figure 3-65. Honeycomb Stacks Positioned

BUILDING EQUIPMENT HOSE BOX

3-74. Build the equipment boxe as shown in Figure 3-5.

POSITIONING EQUIPMENT HOSE BOX

3-75. Position the equipment hose box as shown in Figure 3-6.

STORING EQUIPMENT IN THE EQUIPMENT HOSE BOX

3-76. Store the equipment in the equipment hose box as shown in Figure 3-7.

LASHING EQUIPMENT HOSE BOX TO PLATFORM

3-77. Lash the equipment hose box to the platform as shown in Figures 3-66 and 3-67.

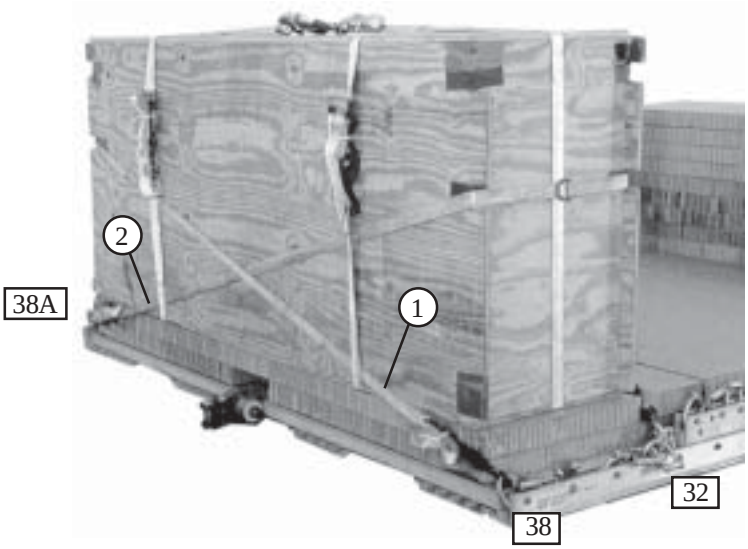

Lashing Number	Tie-down Clevis Number	Instructions
1	38 and 32	Route a 30-foot lashing from clevis 38 to the rear bottom left cutout, to the front bottom left cutout, to clevis 32. Ensure lashing is routed under the load binders on the rear of box.
2	38A and 32A	Route a 30-foot lashing from clevis 38A to the rear bottom right cutout, to the front bottom right cutout, to clevis 32A. Ensure lashing is routed under the load binders on the front of the box.

Figure 3-66. Lashings 1 and 2 Installed

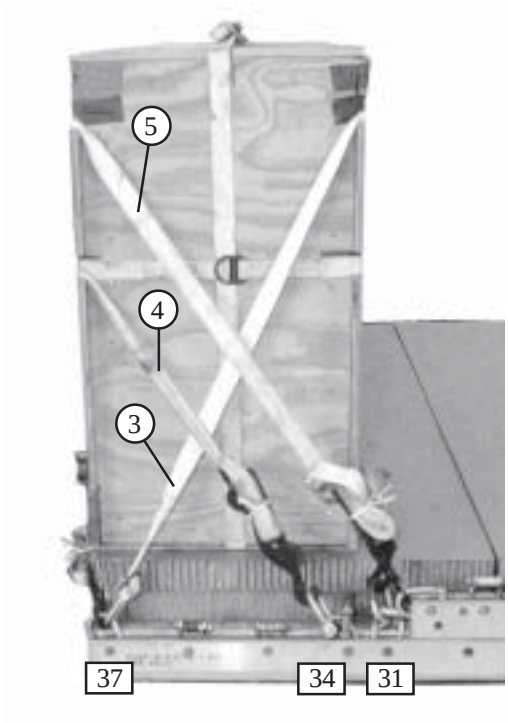

Lashing Number	Tie-down Clevis Number	Instructions
3	37 and 37A	Route a lashing through clevis 37 and back through it's own D-ring. Repeat for clevis 37A. Route lashings through top front cutouts and load bind in center of equipment box.
4	34A and 34	Route a lashing through clevis 34A and back through it's own D-ring to the bottom rear cutouts to clevis 34.
5	31A and 31	Route a 30-foot lashing through the rear top cutouts and load bind to clevises 31 and 31A.

Figure 3-67. Lashings 3, 4, and 5 Installed

POSITIONING AND SECURING PARACHUTE STACK

3-78. Position and secure parachute stack as shown in Figure 3-68.

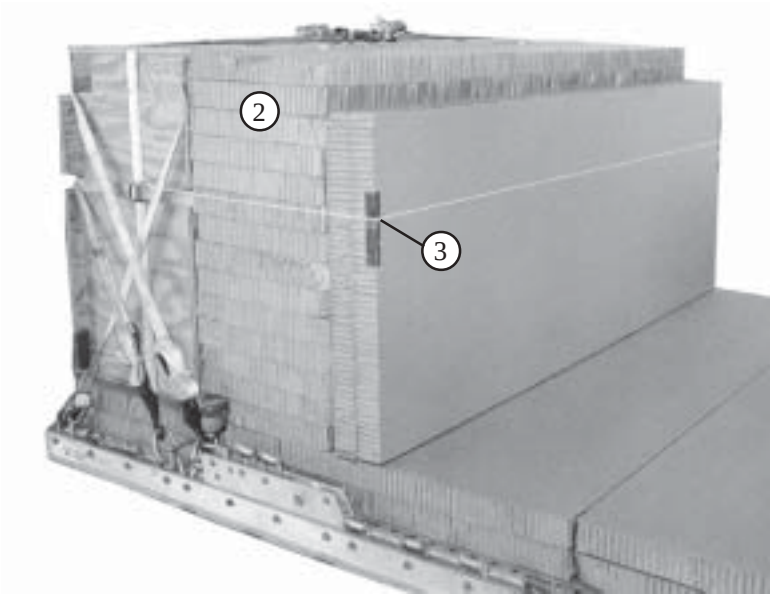

1. Cut 14 pieces of 96-inch by 18-inch honeycomb and glue them together.
2. Position the parachute stack flush against the front of the equipment hose box.
3. Place two pieces of 96-inch by 36-inch honeycomb on edge in front of the parachute stack. Tape the edge and secure with type III nylon cord.

Figure 3-68. Parachute Stack Positioned

POSITIONING AND LASHING THE DRUMS

3-79. Position and lash the drums as shown in Figures 3-69 through 3-77.

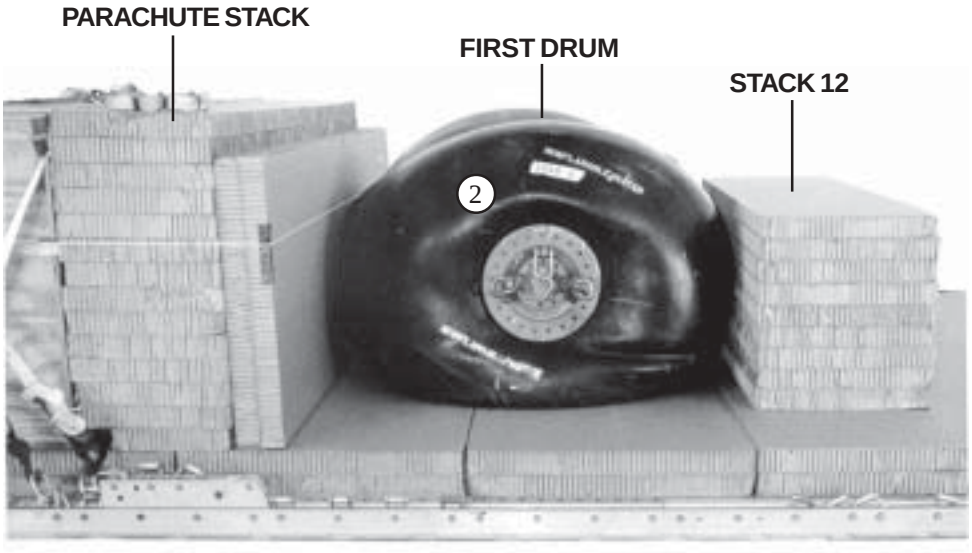

NOTE: Stacks 11 and 12 may need to be moved during placement of drums.

1. Place a platform clevis on one end of two 9-foot (2-loop), type XXVI nylon slings. Attach sling to each side of the drum (for lifting purposes only) and remove after positioning (not shown).

2. Position the first drum centered left to right on the platform and in front of the parachute stack.

Figure 3-69. Drums Positioned on Platform

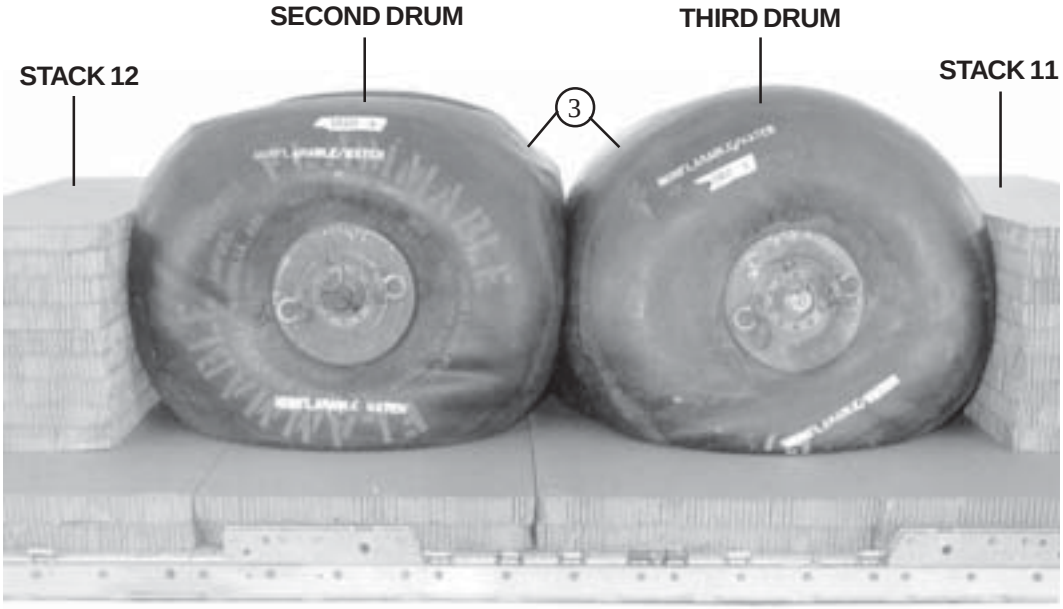

3 Position the second and third drums centered between honeycomb stacks 11 and 12.

Figure 3-69. Drums Positioned on Platform (Continued)

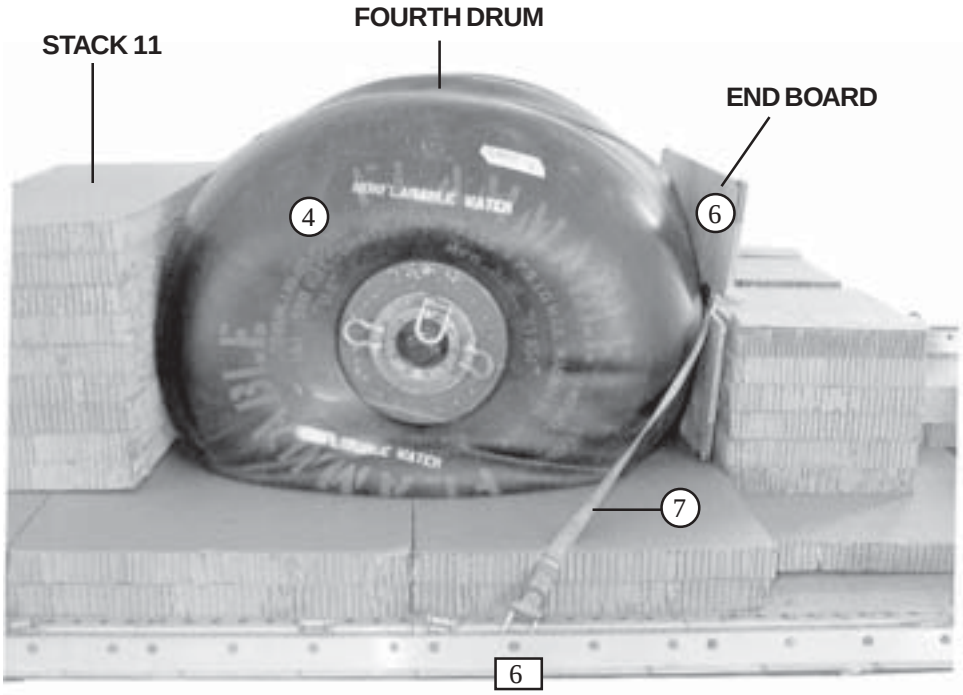

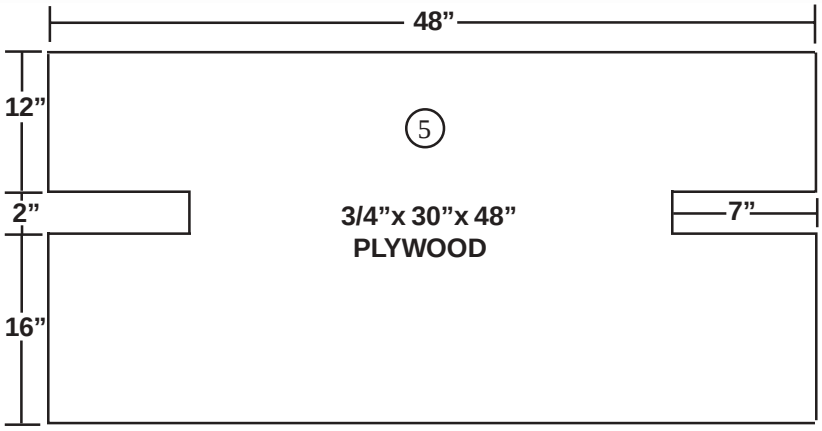

4 Position the fourth drum centered and in front of stack 11.

5 Construct the end board as shown above.

6 Place the end board in front of the fourth drum.

7 Route a lashing through clevis 6 and back through it’s own D-ring through the cutouts of the end board to clevis 6A (this is a temporary lashing).

Figure 3-69. Drums Positioned on Platform (Continued)

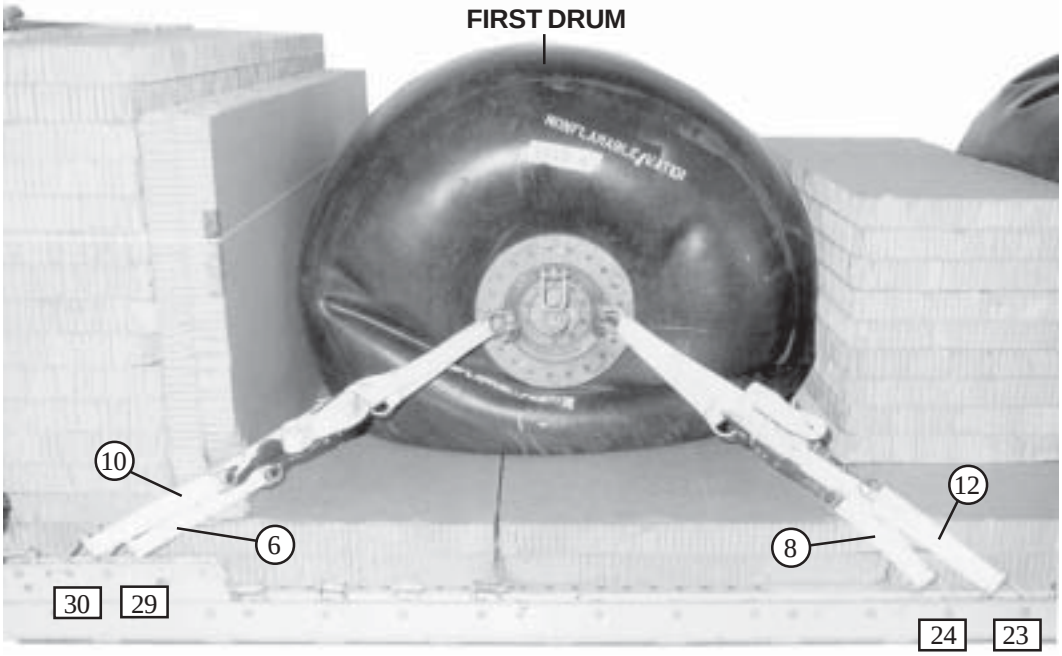

Lashing Number	Tie-down Clevis Number	Instructions
6	29	Route a lashing from clevis 29 to the right rear shackle of the first drum.
7	29A	Route a lashing from clevis 29A to the left rear shackle of the first drum.
8	24	Route a lashing from clevis 24 to the right front shackle of the first drum.
9	24A	Route a lashing from clevis 24A to the left front shackle of the first drum.
10	30	Route a lashing from clevis 30 to the right rear shackle of the first drum.
11	30A	Route a lashing from clevis 30A to the left rear shackle of the first drum.
12	23	Route a lashing from clevis 23 to the right front shackle of the first drum.
13	23A	Route a lashing from clevis 23A to the left front shackle of the first drum.

Figure 3-70. Lashings 6 Through 13 Installed

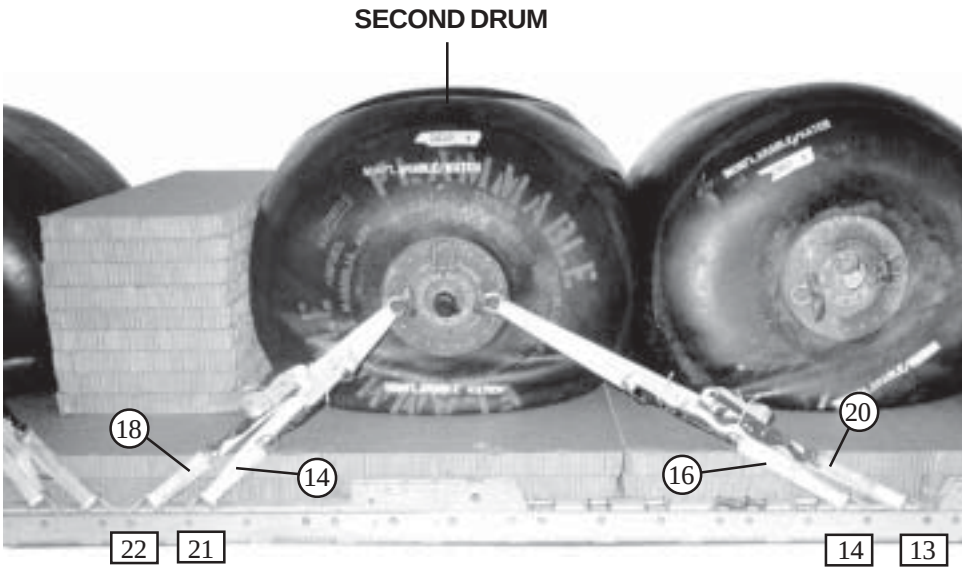

Lashing Number	Tie-down Clevis Number	Instructions
14	21	Route a lashing from clevis 21 to the right rear shackle of the second drum.
15	21A	Route a lashing from clevis 21A to the left rear shackle of the second drum.
16	14	Route a lashing from clevis 14 to the right front shackle of the second drum.
17	14A	Route a lashing from clevis 14A to the left front shackle of the second drum.
18	22	Route a lashing from clevis 22 to the right rear shackle of the second drum.
19	22A	Route a lashing from clevis 22A to the left rear shackle of the second drum.
20	13	Route a lashing from clevis 13 to the right front shackle of the second drum.
21	13A	Route a lashing from clevis 13A to the left front shackle of the second drum.

Figure 3-71. Lashings 14 Through 21 Installed

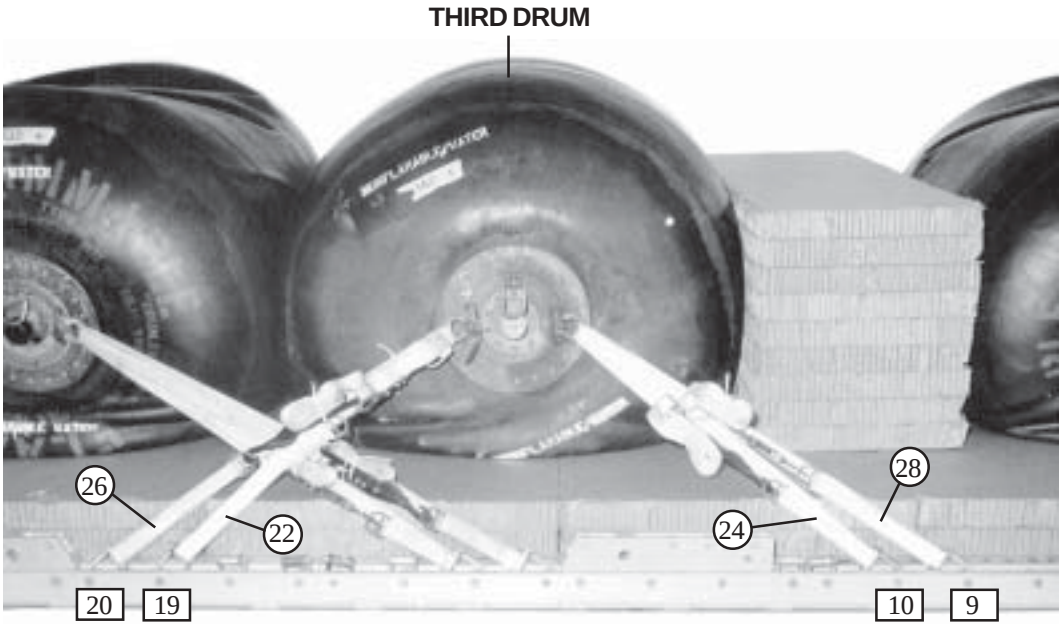

Lashing Number	Tie-down Clevis Number	Instructions
22	19	Route a lashing from clevis 19 to the right rear shackle of the third drum.
23	19A	Route a lashing from clevis 19A to the left rear shackle of the third drum.
24	10	Route a lashing from clevis 10 to the right front shackle of the third drum.
25	10A	Route a lashing from clevis 10A to the left front shackle of the third drum.
26	20	Route a lashing from clevis 20 to the right rear shackle of the third drum.
27	20A	Route a lashing from clevis 20A to the left rear shackle of the third drum.
28	9	Route a lashing from clevis 9 to the right front shackle of the third drum.
29	9A	Route a lashing from clevis 9A to the left front shackle of the third drum.

Figure 3-72. Lashings 22 Through 29 Installed

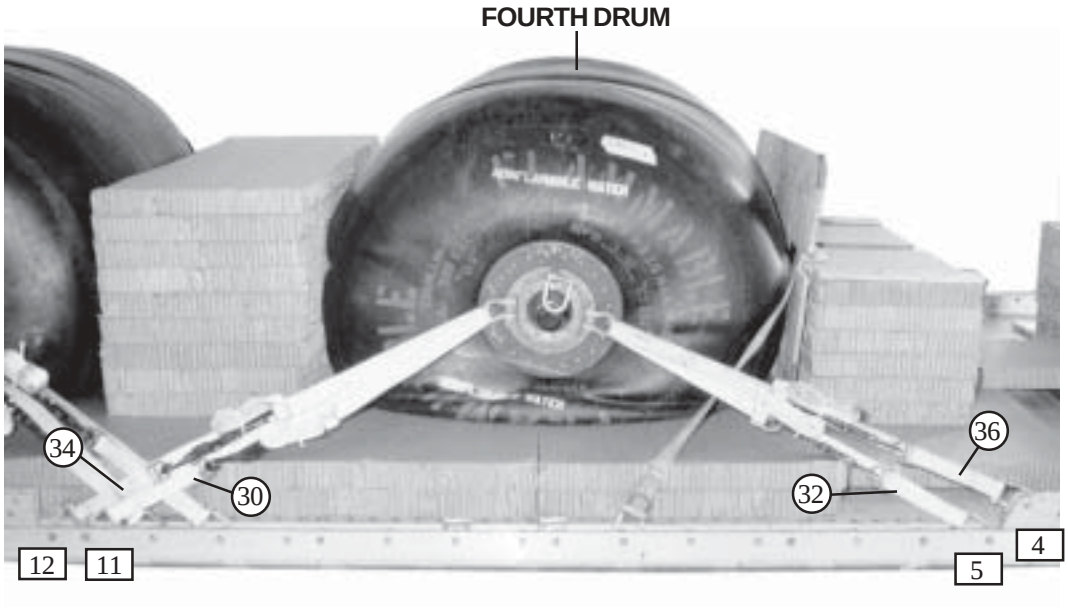

Lashing Number	Tie-down Clevis Number	Instructions
30	11	Route a lashing from clevis 11 to the right rear shackle of the fourth drum.
31	11A	Route a lashing from clevis 11A to the left rear shackle of the fourth drum.
32	5	Route a lashing from clevis 5 to the right front shackle of the fourth drum.
33	5A	Route a lashing from clevis 5A to the left front shackle of the fourth drum.
34	12	Route a lashing from clevis 12 to the right rear shackle of the fourth drum.
35	12A	Route a lashing from clevis 12A to the left rear shackle of the fourth drum.
36	4	Route a lashing from clevis 4 to the right front shackle of the fourth drum.
37	4A	Route a lashing from clevis 4A to the left front shackle of the fourth drum.

Figure 3-73. Lashings 30 Through 37 Installed

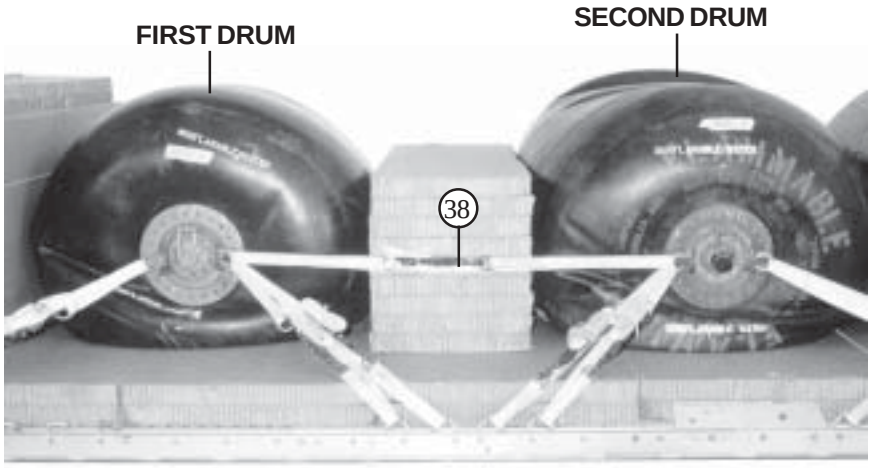

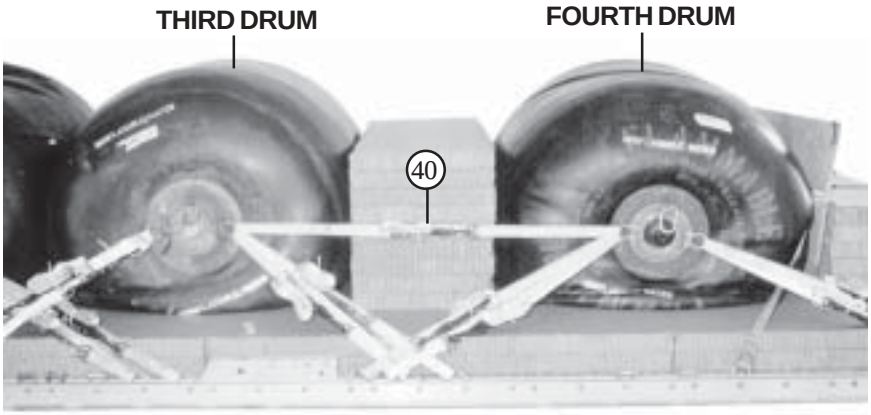

Lashing Number	Tie-down Clevis Number	Instructions
38		Route a lashing from the front shackle of the first drum to the rear shackle of the second drum on the right side.
39		Route a lashing from the front shackle of the first drum to the rear shackle of the second drum on the left side.
40		Route a lashing from the front shackle of the third drum to the rear shackle of the fourth drum on the right side.
41		Route a lashing from the front shackle of the third drum to the rear shackle of the fourth drum on the left side.

Figure 3-74. Lashings 38 Through 41 Installed

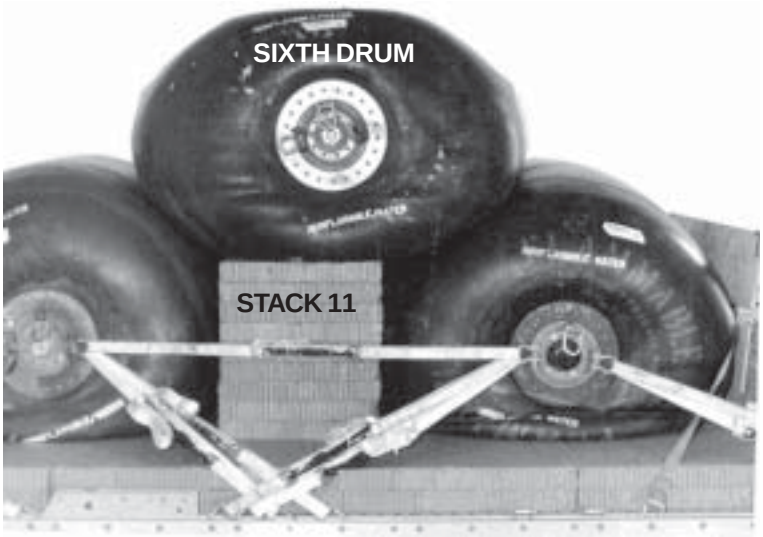

1. Position the fifth drum centered on top of stack 12.
2. Position the sixth drum centered on top of stack 11.

Figure 3-75. Drums Positioned on Platform

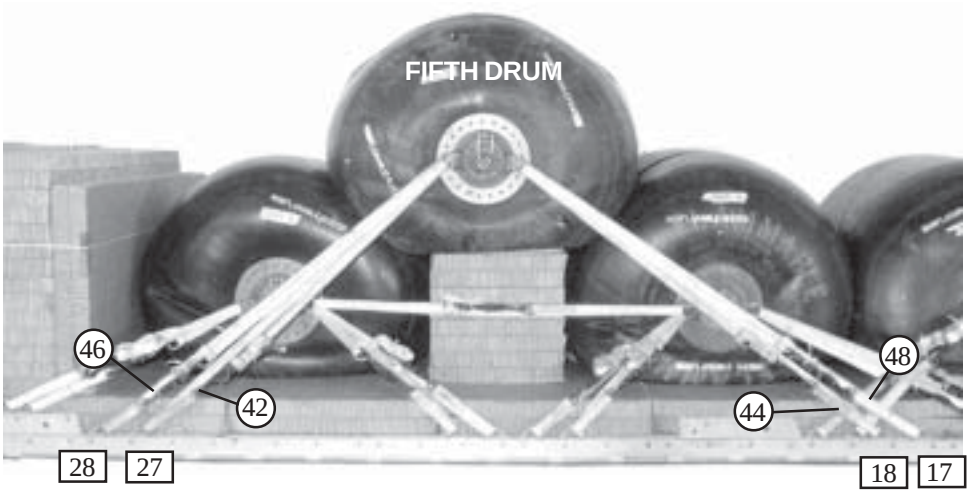

Lashing Number	Tie-down Clevis Number	Instructions
42	27	Route a lashing from clevis 27 to the right rear shackle of the fifth drum.
43	27A	Route a lashing from clevis 27A to the left rear shackle of the fifth drum.
44	18	Route a lashing from clevis 18 to the right front shackle of the fifth drum.
45	18A	Route a lashing from clevis 18A to the left front shackle of the fifth drum.
46	28	Route a lashing from clevis 28 to the right rear shackle of the fifth drum.
47	28A	Route a lashing from clevis 28A to the left rear shackle of the fifth drum.
48	17	Route a lashing from clevis 17 to the right front shackle of the fifth drum.
49	17A	Route a lashing from clevis 17A to the left front shackle of the fifth drum.

Figure 3-76. Lashings 42 Through 49 Installed

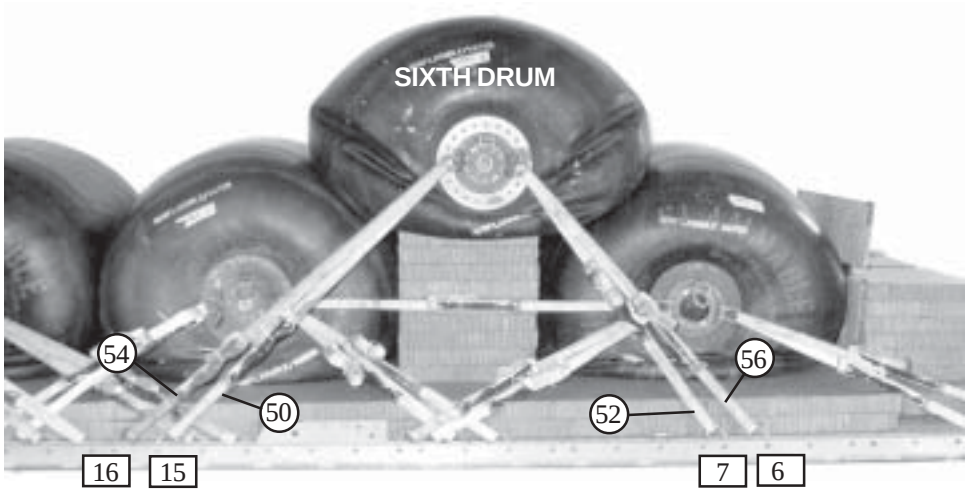

NOTE: Remove the temporary end board lashing on clevises 6 and 6A.

Lashing Number	Tie-down Clevis Number	Instructions
50	15	Route a lashing from clevis 15 to the right rear shackle of the sixth drum.
51	15A	Route a lashing from clevis 15A to the left rear shackle of the sixth drum.
52	7	Route a lashing from clevis 7 to the right front shackle of the sixth drum.
53	7A	Route a lashing from clevis 7A to the left front shackle of the sixth drum.
54	16	Route a lashing from clevis 16 to the right rear shackle of the sixth drum.
55	16A	Route a lashing from clevis 16A to the left rear shackle of the sixth drum.
56	6	Route a lashing from clevis 6 to the right front shackle of the sixth drum.
57	6A	Route a lashing from clevis 6A to the left front shackle of the sixth drum.

Figure 3-77. Lashings 50 Through 57 Installed

PREPARING AND POSITIONING THE PUMP

3-80. Prepare the pump as shown in Figure 2-8. Position the pump as shown in Figure 3-78.

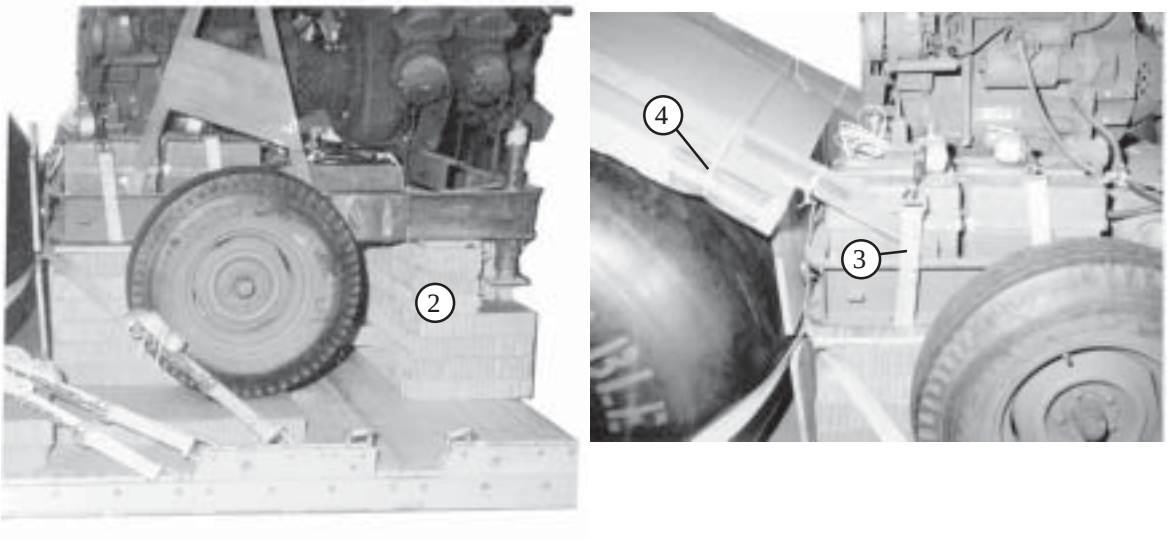

1. Preposition two lashings in each of the rear tie down points on the pump (not shown).
2. Position the pump on honeycomb stack 1 aligning the front frame edge with the front edge of the platform.
3. Unbolt the lower arm of the pump lifting frame and secure it to the frame with type III nylon cord and disconnect the lashing around the battery box.
4. Tape the edges of a 53-inch by 36-inch piece of honeycomb and secure it to the rear lifting frame with type III nylon cord.

Figure 3-78. Pump Prepared and Positioned

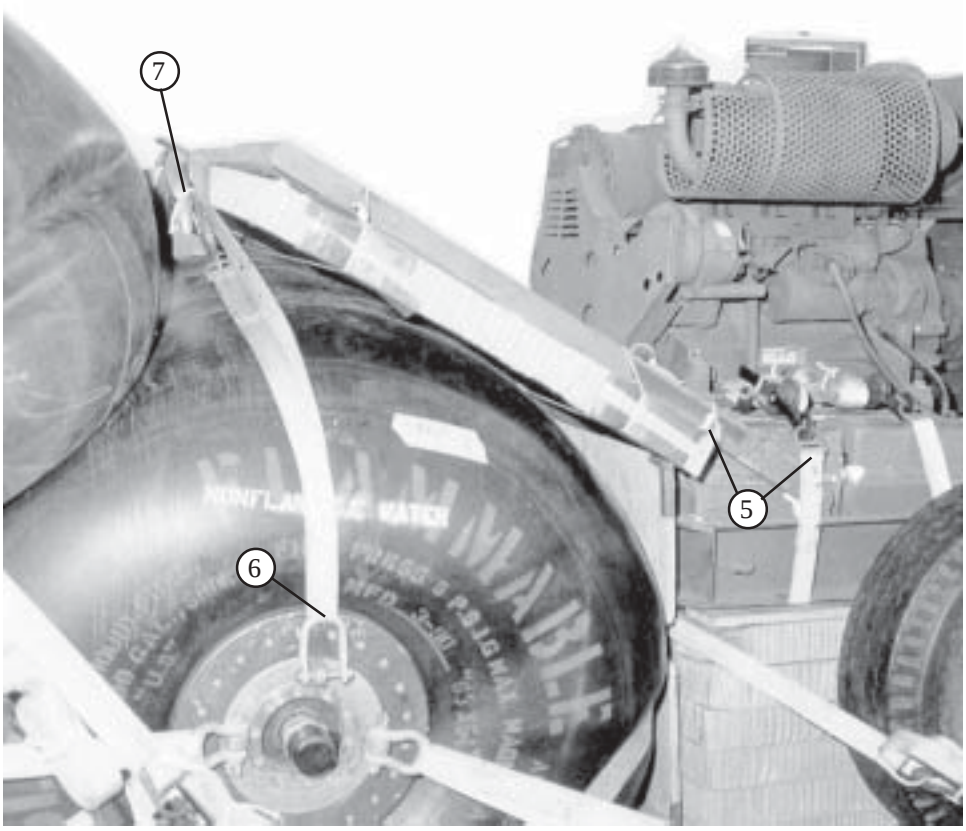

(5) Position the lifting frame on the fourth drum and reconnect the lashing around the battery box.

(6) Route a lashing through the top right shackle on the fourth drum over and through the lifting point on the frame. Continue to route the same lashing through the top left shackle on the fourth drum back over and through the lifting point on the frame. Secure the load binder and D-ring.

(7) Secure a piece of felt on the lifting point with type III nylon cord.

(8) Secure a canvas cover over the pump and secure with type III nylon cord (not shown).

Figure 3-78. Pump Prepared and Positioned (Continued)

LASHING PUMP TO PLATFORM

3-81. Lash the pump to the platform as shown in Figure 3-79.

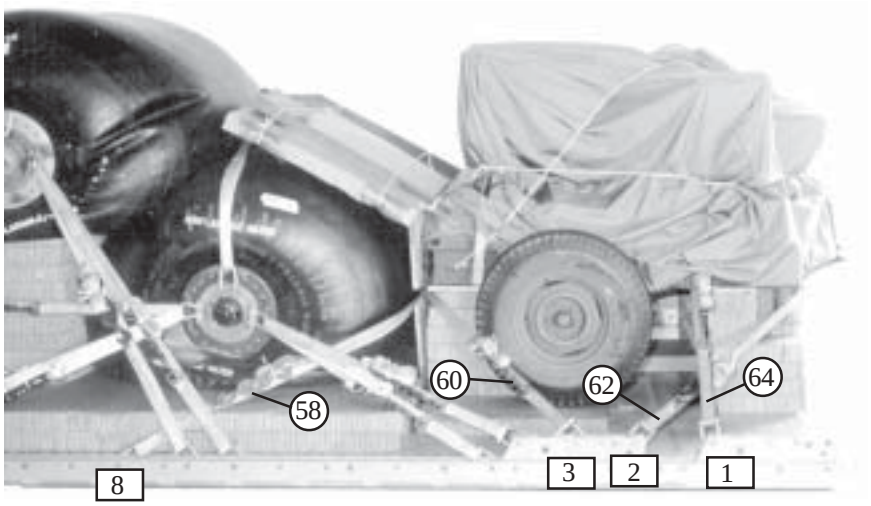

Lashing Number	Tie-down Clevis Number	Instructions
58	8	Route the prepositioned lashing from the right rear tiedown point through the cutout in the endboard to clevis 8.
59	8A	Route a prepositioned lashing from the left rear tiedown point through the cutout in the endboard to clevis 8A.
60	3	Route a prepositioned lashing from the right rear tiedown point to clevis 3.
61	3A	Route a prepositioned lashing from the left rear tiedown point to clevis 3A.
62	2	Route a lashing from clevis 2 to the right front tiedown point.
63	2A	Route a lashing from clevis 2A to the left front tiedown point.
64	1	Route a lashing from clevis 1 to the right side frame.
65	1A	Route a lashing from clevis 1A to the left side frame.

Figure 3-79. Lashings 58 Through 65 Installed

BUILDING, POSITIONING, AND LASHING THE SEPARATOR BOX TO THE PLATFORM

3-82. Build the separator box as shown in Figure 3-80. Place the separator in the box as shown in Figure 3-81. Prepare, position, and lash the separator box as shown in Figures 3-82 and 3-83.

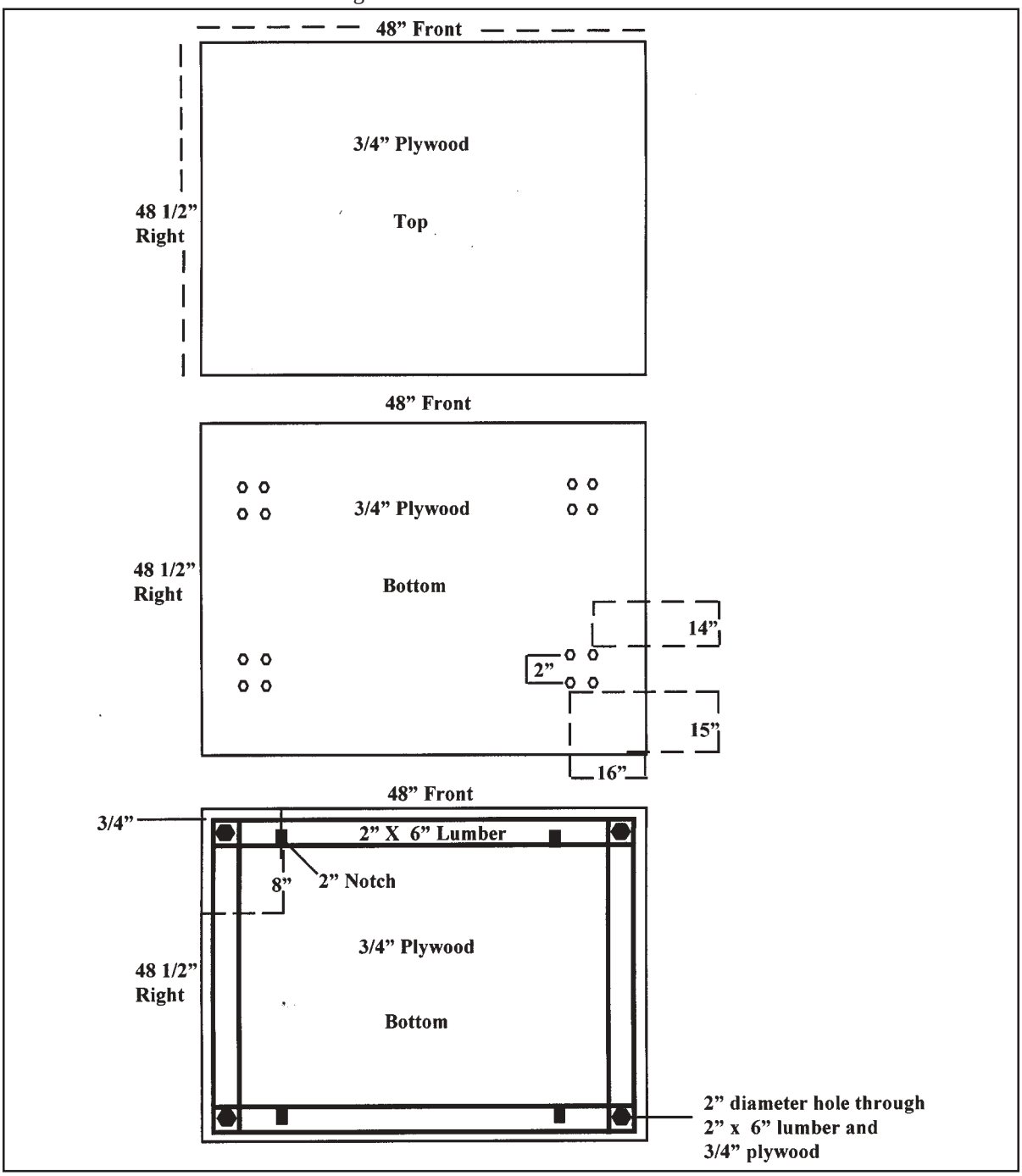

Figure 3-80. Separator Box Built

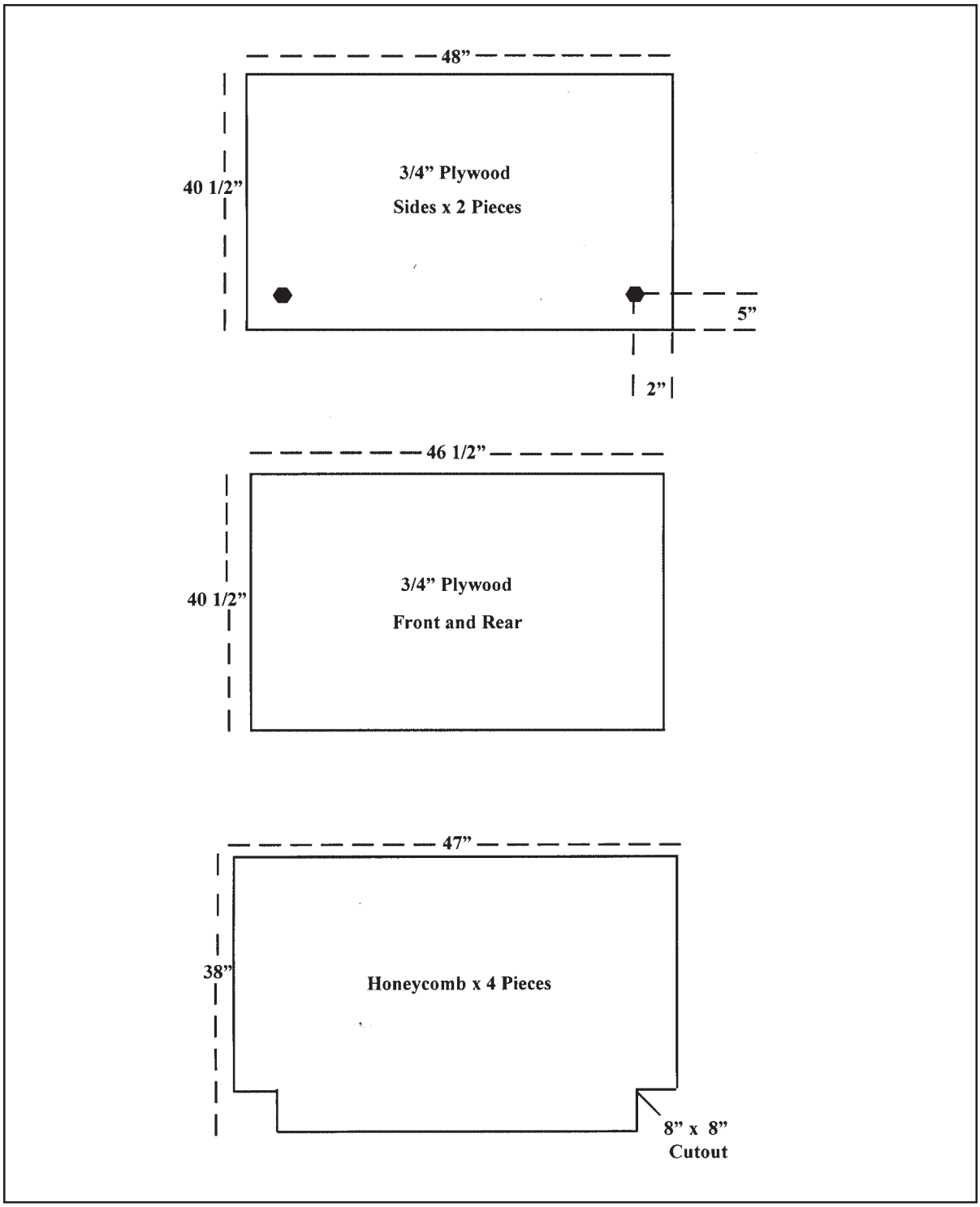

Figure 3-80. Separator Box Built (Continued)

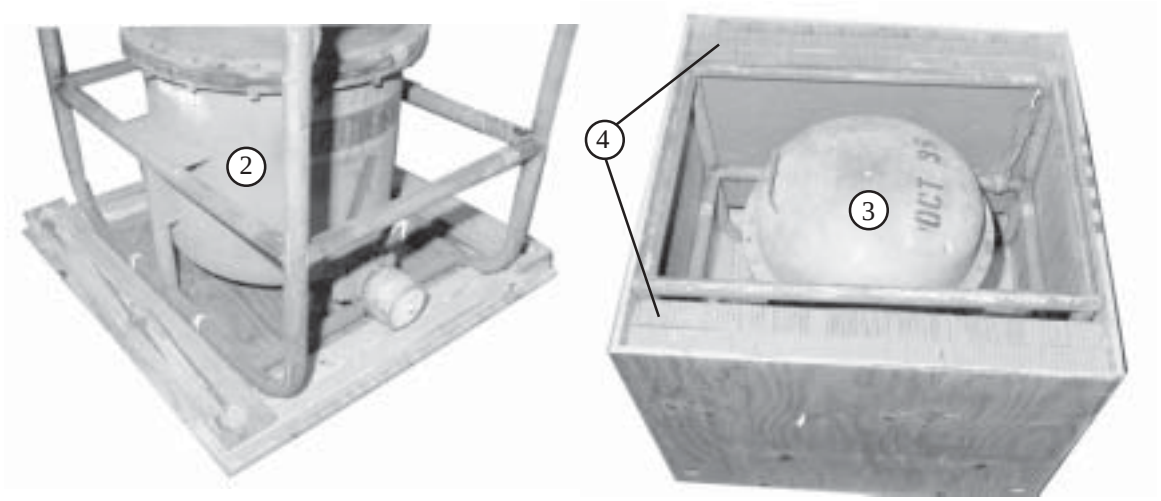

1. Place a piece of 1/2-inch tubular nylon webbing through the hole on the bottom piece of the separator box (not shown).
2. Place the fuel separator in the box aligning the separator frame with the notched cutouts in the 2-inch by 6-inch piece of lumber.
3. Secure the separator with 1/2-inch tubular nylon webbing through the holes in the bottom piece.
4. Place four 47-inch by 38-inch pieces of honeycomb with notched corners (two per side), next to the separator in the box.

Figure 3-81. Separator Placed In Box

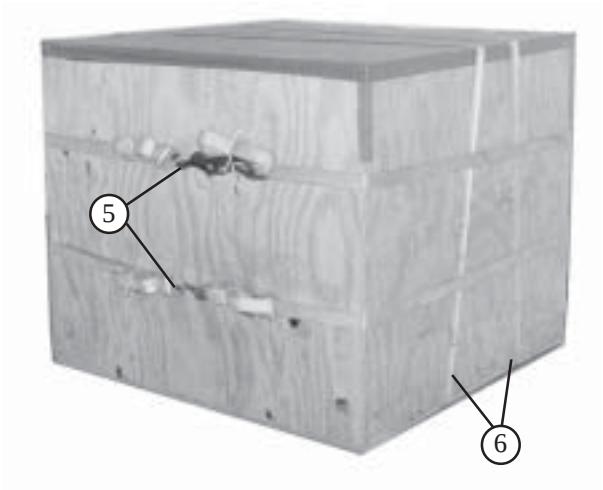

(5) Use two lashings to secure the box. Place each lashing approximately 16 inches in from the top and bottom of the box.

(6) Use two lashings to secure the box from front to rear. Place each lashing approximately 16 inches in from each side of the box.

Figure 3-81. Separator Placed In Box (Continued)

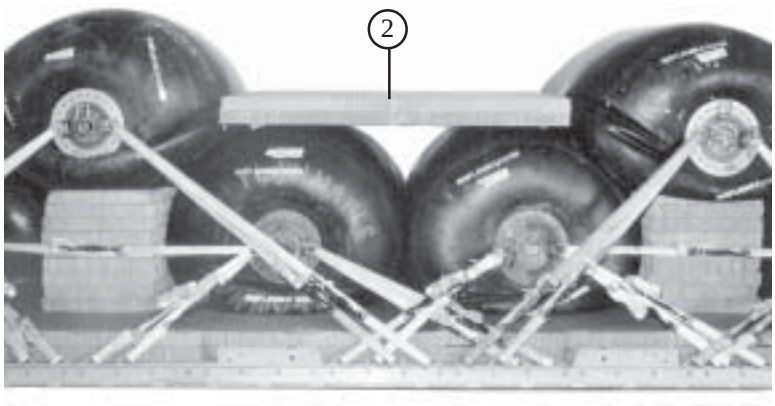

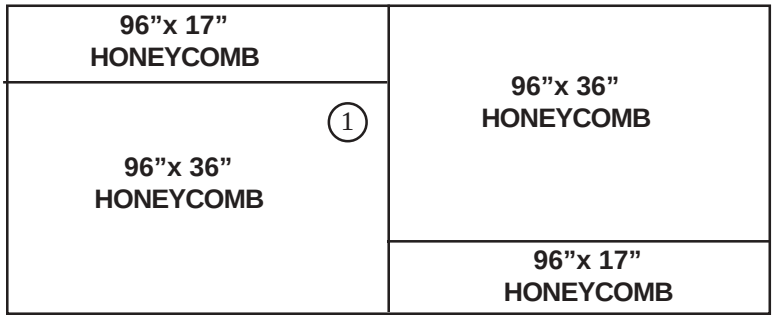

96”x 53” BASE

1. Alternate two pieces of 96-inch by 36-inch honeycomb and two pieces of 17-inch by 36-inch honeycomb to make a two layer 96-inch by 53-inch base. Glue the layers together.
2. Cut the stack to fit tightly between the fifth and sixth drums.

Figure 3-82. Honeycomb Stack for Separator Box Prepared

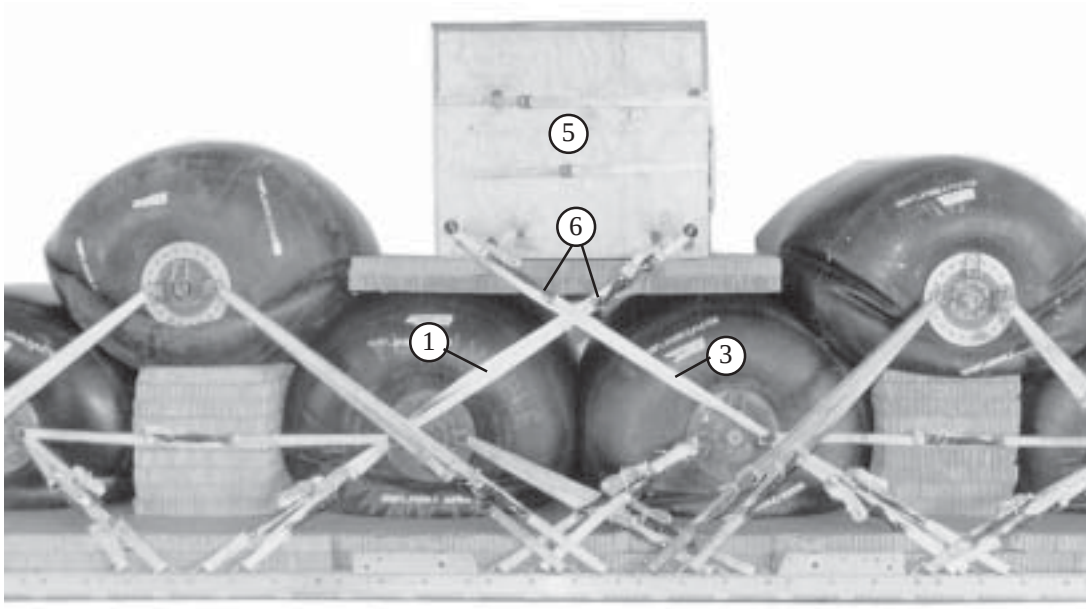

NOTE: The separator box must be suspended to complete the routing of the lashings.

1. Route a lashing from the right rear shackle of the second drum up through the bottom right front hole and out the side right front hole of the box.
2. Repeat step 1 for the left side.
3. Route a lashing from the right front shackle of the third drum up through the bottom right rear hole and out the side right rear hole of the box.
4. Repeat step 3 for the left side.
5. Lower and position the separator box centered on the honeycomb between the drums. Remove lifting slings.
6. Secure separator box lashings and safety tie the lower hooks of the load binders to the lower D-rings with a single length of type III nylon cord.

Figure 3-83. Separator Box Positioned and Secured to Load

CONSTRUCTING AND POSITIONING THE RELEASE PLATFORM

3-83. Construct and position the release platform as shown in Figure 3-84.

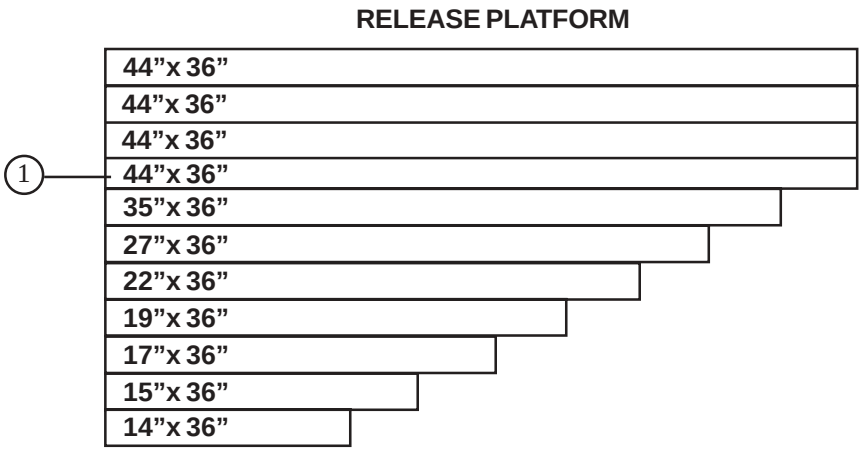

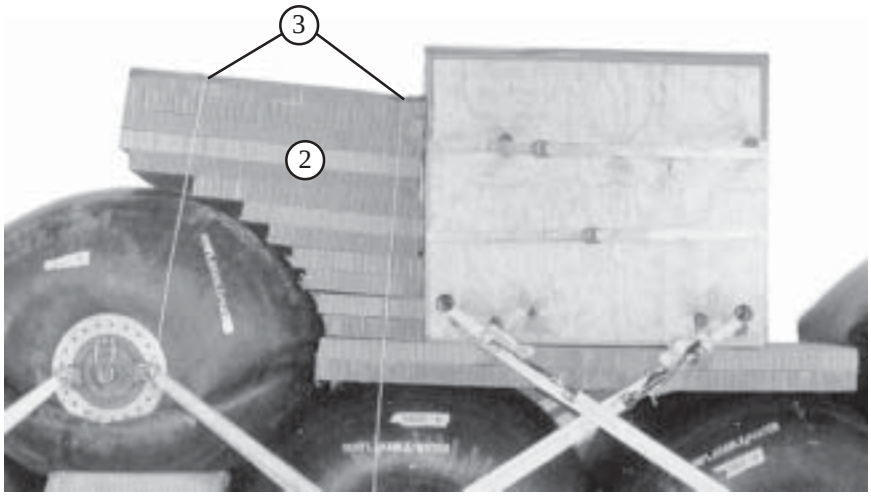

1. Construct and glue the release platform.
2. Position the release platform to the rear of the separator box and on top of the fifth drum.
3. Tape the top edges and secure with type III nylon cord to a convenient location on the load.

Figure 3-84. Release Platform Constructed and Positioned

INSTALLING SUSPENSION SLINGS AND SAFETY TIES

3-84. Install suspension slings and safety ties as shown in Figure 3-85.

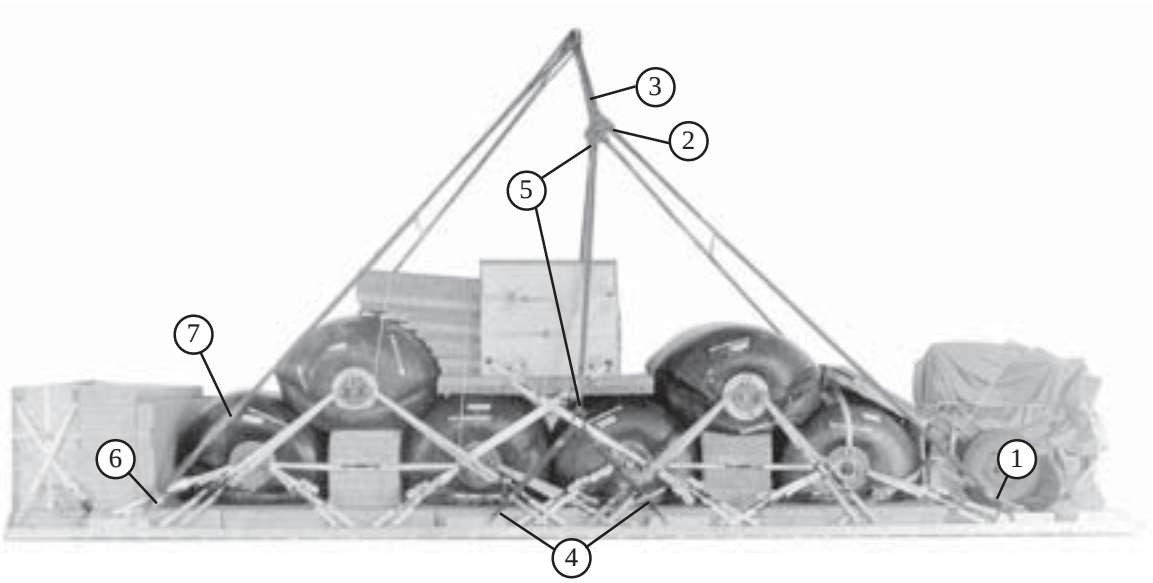

1. Place a large clevis to one end of a 16-foot (4-loop), type XXVI nylon suspension sling. Attach the clevis to the front right suspension bracket.
2. Attach the running end of the 16-foot sling to a 3-point link.
3. Attach a 3-foot (4-loop), type XXVI nylon suspension sling to the 3-point link.
4. Attach one large clevis to each running end of two 3-foot (4-loop), type XXVI nylon suspension slings. Attach a large clevis to the running ends of each 3-foot sling and attach the large clevises to the center right two suspension brackets.
5. Attach a 9-foot (4-loop), type XXVI nylon suspension sling to the 3-point link. Attach the running end to the large clevis at the ends of the two 3-foot slings.
6. Place a large clevis in one end of a 3-foot (4-loop), type XXVI nylon suspension sling. Attach the clevis to the right rear suspension bracket.
7. Attach a 5 1/2-inch 2-point link to the 3-foot sling and attach a 16-foot (4-loop), type XXVI nylon suspension sling to the running end of the link.
8. Repeat steps 1 through 7 for the left side (not shown).

Figure 3-85. Suspension Slings and Safety Ties Installed

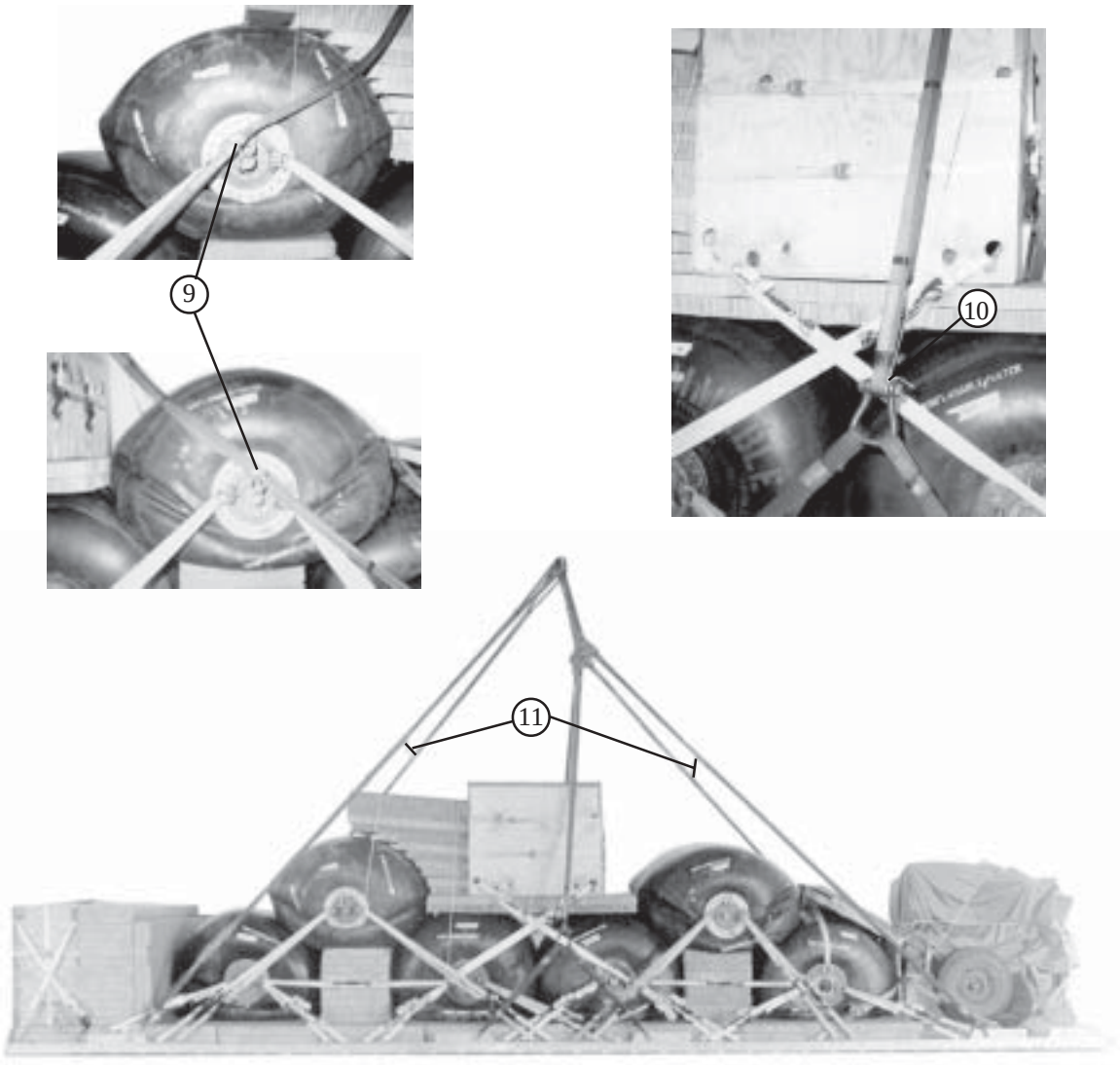

(9) Safety the front and rear slings to the load with type I, 1/4-inch cotton webbing.

(10) Secure the center slings with type III nylon cord.

(11) Raise the suspension slings and install the suspension sling safety ties as shown in Appendix A, to the front and rear suspension slings, six to eight inches above the highest point of the load (not shown).

(12) Pad and tape all link assemblies (not shown).

Figure 3-85. Suspension Slings and Safety Ties Installed (Continued)

BUILDING AND POSITIONING PARACHUTE STOWAGE PLATFORM

3-85. Build the parachute stowage platform as shown in Figure 3-18. Position a 85-inch by 17-inch piece of honeycomb on top of the parachute stack. Position the stowage platform on top of the equipment hose box and parachute stack. Lash the parachute stowage platform as shown in Figure 3-86.

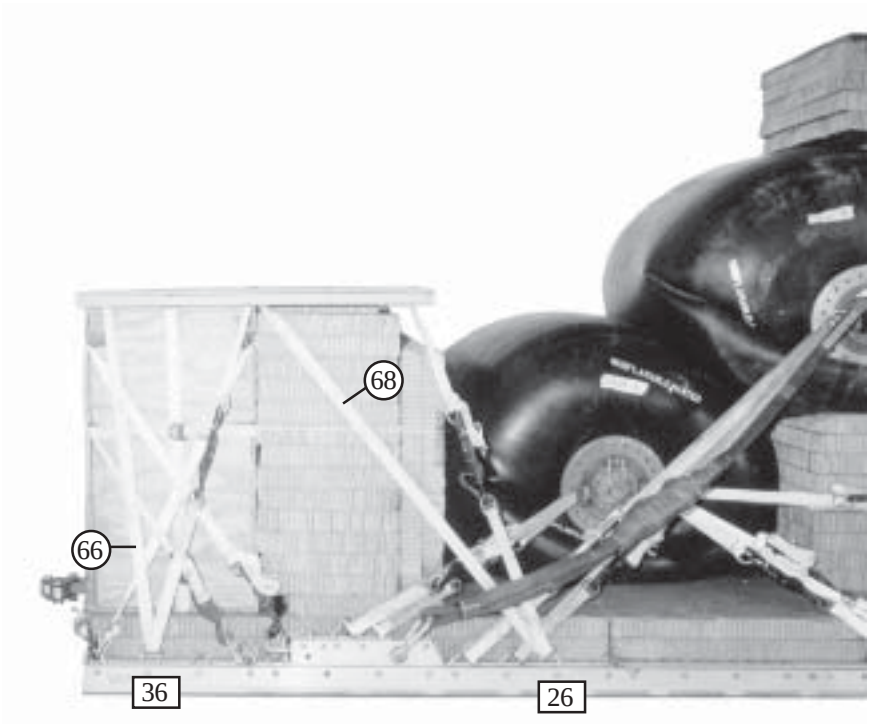

Lashing Number	Tie-down Clevis Number	Instructions
66	36	Route a lashing from clevis 36 through the rear and center right holes in the parachute stowage platform.
67	36A	Route a lashing from clevis 36A through the rear and center left holes in the parachute stowage platform.
68	26	Route a lashing from clevis 26 through the center and front right holes in the parachute stowage platform.
69	26A	Route a lashing from clevis 26A through the center and front left holes in the parachute stowage platform.

Figure 3-86. Parachute Stowage Platform Built and Positioned

PREPARING AND STOWING CARGO PARACHUTES

3-86. Prepare and stow the cargo parachutes as shown in Figure 3-87.

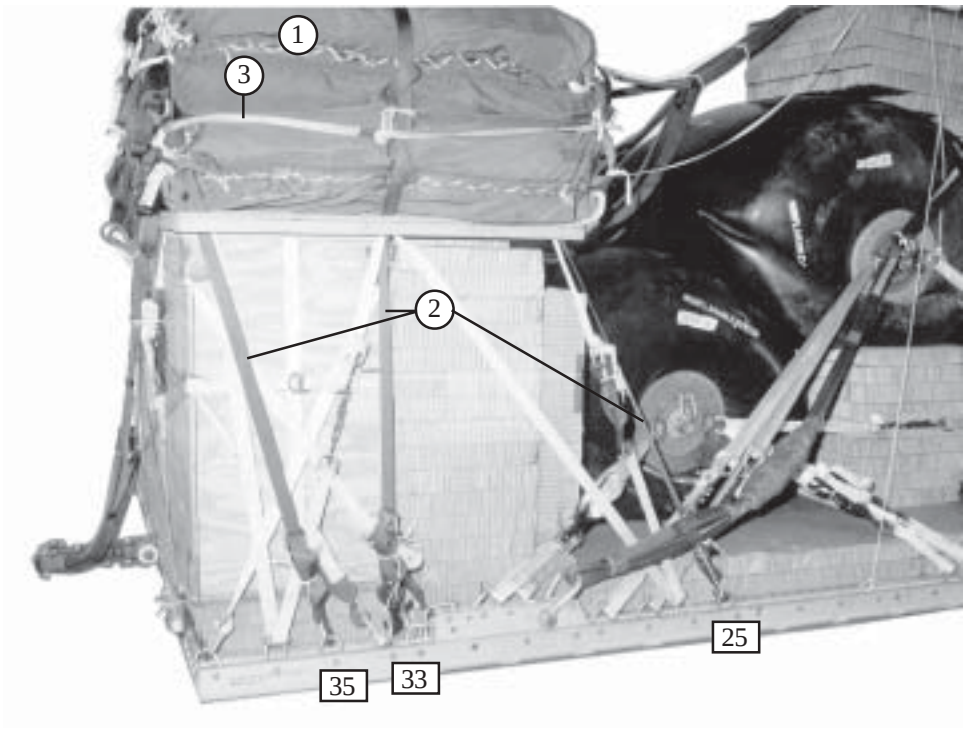

1. Prepare and stow seven G-11 cargo parachutes according to FM 4-20.102/NAVSEA SS400-AB-MMO-010/TO 13C7-1-5.

2. Restrain the parachutes according to FM 4-20.102/NAVSEA SS400-AB-MMO-010/TO 13C7-1-5 using platform clevises 25, 25A, 33, 33A, 35 and 35A.

3. Install the multicut parachute release straps according to FM 4-20.102/NAVSEA SS400-AB-MMO-010/TO 13C7-1-5.

Figure 3-87. Cargo Parachutes Prepared and Stowed

INSTALLING THE EXTRACTION SYSTEM

3-87. Install the extraction system as shown in Figure 3-88.

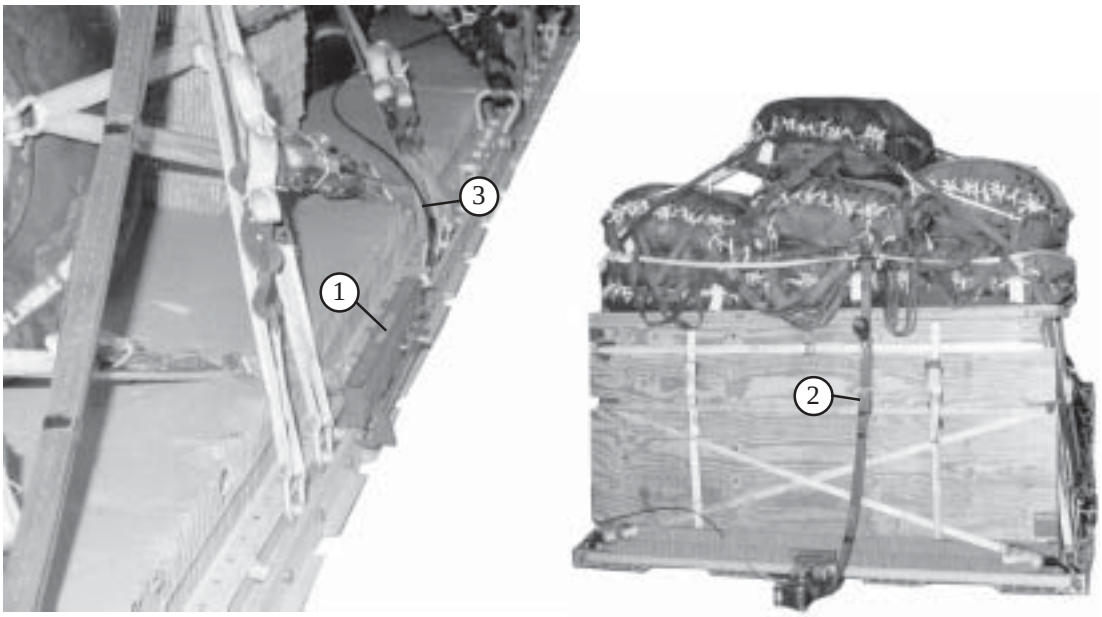

1. Using the rear holes, install the extraction force transfer coupling (EFTC) according to FM 4-20.102/NASEA SS400-AB-MMO-010/TO 13C7-1-5.
2. Use a 9-foot (2-loop), type XXVI nylon webbing sling for use as a deployment line.
3. Using a 28-foot EFTC cable, safety the cable using one turn type I, 1/4-inch cotton webbing.

Figure 3-88. Extraction System Installed

INSTALLING THE PARACHUTE RELEASE SYSTEM

3-88. Install the cargo parachute release as shown in Figure 3-89.

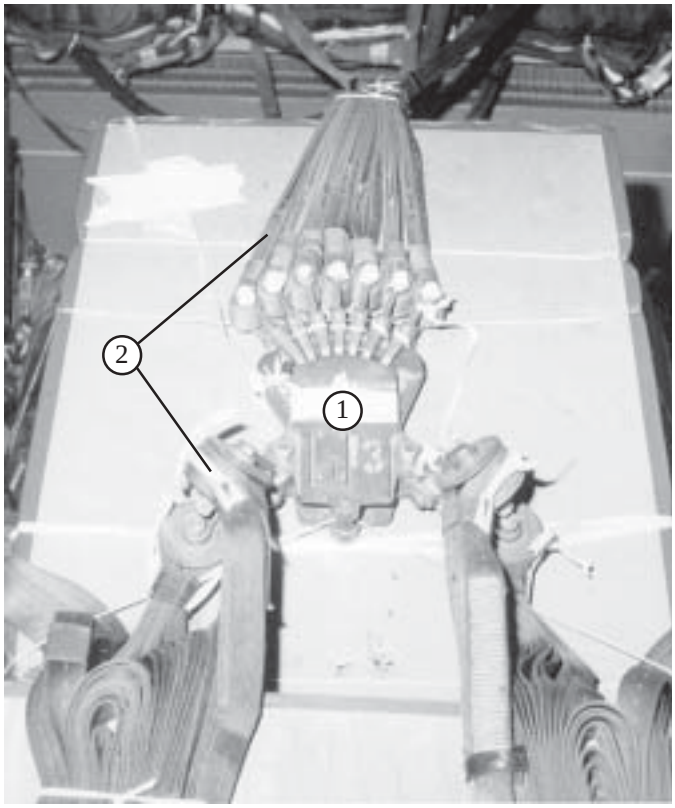

1. Position the M-2 release on the release platform.
2. Attach the suspension slings and the riser extensions to the M-2 release and secure release according to FM 4-20.102/NAVSEA SS400-AB-MMO-010/TO 13C7-1-5.
3. S-fold and tie any slack in the suspension slings with one turn type I, 1/4-inch cotton webbing (not shown).

Figure 3-89. Parachute Release Installed

PLACING EXTRACTION PARACHUTE

3-89. Select the extraction parachute and extraction line needed using the extraction line requirements table in FM 4-20.102/NAVSEA SS400-AB-MMO-010/TO 13C7-1-5. Rig the extraction line in an extraction line bag according to TM 10-1670-286-20/TO 13C5-2-41. Place the extraction parachute and extraction line on the load for installation in the aircraft.

INSTALLING PROVISIONS FOR EMERGENCY RESTRAINTS

3-90. Select and install the provisions for emergency aft restraints according to the emergency aft restraint requirements table in FM 4-20.102/NAVSEA SS400-AB-MMO-010/TO 13C7-1-5.

MARKING RIGGED LOAD

3-91. Mark the rigged load according to FM 4-20.102/NAVSEA SS400-AB-MMO-010/TO 13C7-1-5 and as shown in Figure 3-90. Complete Shipper's Declaration for Dangerous Goods and affix to the load. If the load varies from the one shown, the weight, height, CB, tipoff curve, and parachute requirements must be recomputed.

EQUIPMENT REQUIRED

3-92. Use the equipment list in Table 3-4 to rig the load shown in Figure 3-90.

CAUTION

Make the final inspection required by FM 4-20.102/NAVSEA SS400-AB-MMO-010/TO 13C7-1-5 before the load leaves the rigging site.

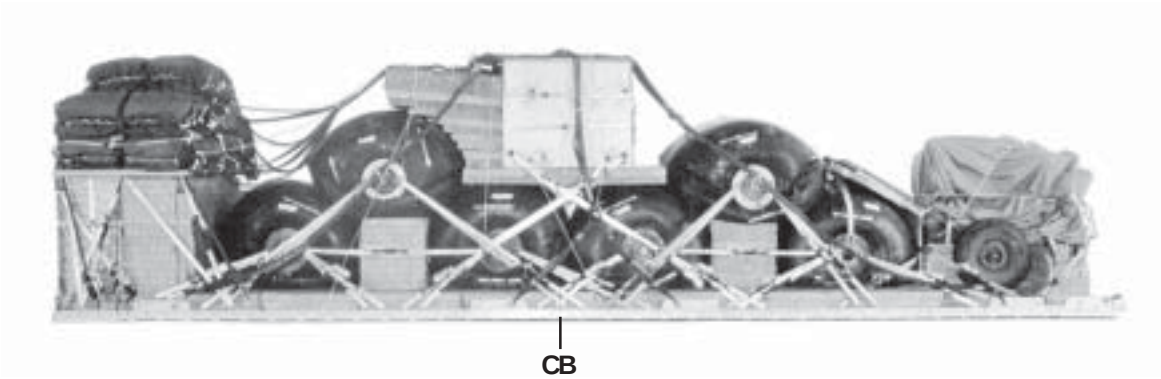

RIGGED LOAD DATA

Weight ..... **32,730 pounds**

Maximum Weight ..... **35,000 pounds**

Height ..... **97 inches**

Width ..... **108 inches**

Overall Length ..... **411 inches**

Overhang: Front (Tongue of pump) ..... **9 inches**
Rear (EFTC) ..... **18 inches**

Center of Balance (CB) (from the front edge of the platform) ..... **201 inches**

Figure 3-90. Six 500-Gallon Drums With Pump and Separator Rigged for Low-Velocity Airdrop

Table 3-4. Equipment Required for Rigging Six 500-Gallon Drums with Pump and Separator

National Stock Number	Item	Quantity
8040-00-273-8713	Adhesive paste, 1-gal	As required
1670-01-035-6054	Bridle, extraction line bag (for DES)	1
4030-00-090-5354	Clevis, large	13
4030-00-678-8562	Clevis, medium	4
8305-00-880-8155	Cloth coated, green, 60-inch	As required
4020-00-240-2146	Cord, nylon, type III, 550-lb	As required
1670-01-326-7309	Coupling, airdrop, extraction force transfer w/28-ft	1
1670-00-360-0328	Cover, clevis, large	7
8135-00-664-6958	Cushioning material, packaging, cellulose wadding	As required
1670-00-003-4391	Knife, parachute bag (for DES)	2
1670-01-183-2678	Leaf, extraction line (line bag)(add 1 for DES)	2
	Line, drogue (for DES)	
1670-01-064-4452	60-foot (1-loop), type XXVI	1
	Line, deployment:	
1670-01-062-6304	9-foot (2-loop), type XXVI	1
	Line, extraction:	
1670-01-064-4454	For C-130: 60-foot (6-loop), type XXVI	1
1670-01-468-9178	For C-17: 140-foot (6-loop), type XXVI	1
1670-01-062-6312	For C-141, C-5: 120-foot (6-loop), type XXVI	1
	Link assembly:	
	Two-point:	
5306-00-435-8994	Bolt, 1-in diam, 4-in long	4
5310-00-232-5165	Nut, 1-in, hexagonal	4
1670-00-003-1954	Plate, side, 5 1/2-in	4
5365-00-007-3414	Spacer, large	4
	Two-point: (for DES)	
5306-00-435-8994	Bolt, 1-in diam, 4-in long	2
5310-00-232-5165	Nut, 1-in, hexagonal	2
1670-00-003-1953	Plate, side, 3 3/4-in	2
5365-00-007-3414	Spacer, large	2

Table 3-4. Equipment Required for Rigging Six 500-Gallon Drums with Pump and Separator (Continued)

National Stock Number	Item	Quantity
1670-01-307-1055	Three-point	2
1670-00-006-2752	Four-point	2
1670-01-483-8259	Link, tow release mechanism (H-Block) C-17 aircraft	1
	Lumber:	
5510-00-220-6146	2- by 4-in	As required
5510-00-220-6148	2- by 6-in	As required
5315-00-010-4659	Nail, steel wire, common, 8d	As required
1670-00-753-3928	Pad, energy dissipating, honeycomb, 3- by 36- by 96-in	45 sheets
	Parachute:	
1670-01-016-7841	Cargo, G-11C	7
1670-00-040-8135	Cargo, extraction, 28ft	2
1670-01-063-3715	Drogue, 15ft (for C-17)	1
	Platform, airdrop, type V, 32-foot:	
1670-01-353-8425	Bracket assembly, component, (EFTC)	(1)
1670-01-247-2389	Bracket, suspension	(8)
1670-01-162-2372	Clevis assembly, type V	(88)
1670-01-353-8424	Extraction bracket assembly	(1)
1670-01-162-2381	Link, tandem, suspension link assembly	(2)
5530-00-618-8073	Plywood, 3/4- by 48- by 96-in	4 sheets
1670-01-097-8817	Release, cargo parachute, M-2	1
	Sling, cargo airdrop	
	For suspension:	
1670-01-062-6306	3-ft (4-loop), type XXVI nylon webbing	8
1670-01-062-6305	9-ft (4-loop), type XXVI nylon webbing	2
1670-01-062-6308	16-ft (4-loop), typeXXVI nylon webbing	4
	For riser extension:	
1670-01-062-6311	120-ft (2-loop), type XXVI nylon webbing	7

Table 3-4. Equipment Required for Rigging Six 500-Gallon Drums with Pump and Separator (Continued)

National Stock Number	Item	Quantity
7510-00-266-5016	Tape, adhesive, 2-in	As required
7510-00-266-6710	Tape, masking, 2-in	As required
1670-00-937-0271	Tie-down assembly, 15-ft	88
	Webbing:	
8305-00-268-2411	Cotton, 1/4-in, type I	As required
8305-00-082-5752	Nylon, tubular, 1/2-in	As required
8305-00-260-6890	Type X	As required