ARMY FM 10-548
AIR FORCE TO 13C7-24-21

AIRDROP OF SUPPLIES AND EQUIPMENT

RIGGING AIRBORNE CRANE-SHOVEL AND ATTACHMENTS

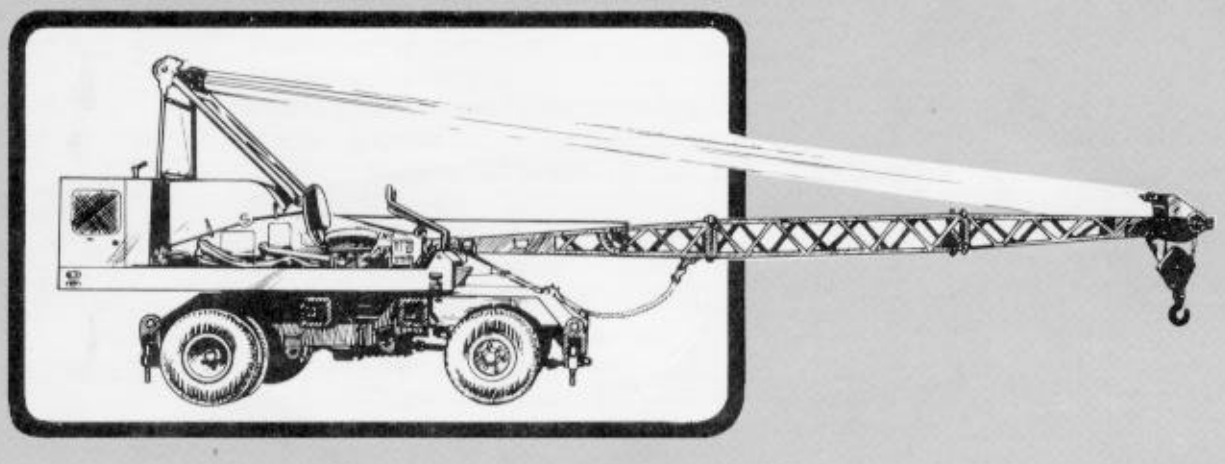

DISTRIBUTION UNLIMITED

DEPARTMENTS OF THE ARMY AND THE AIR FORCE

CHANGE
NO 1

HEADQUARTERS
DEPARTMENTS OF THE ARMY
AND THE AIR FORCE
Washington, DC, 12 December 1990

AIRDROP OF SUPPLIES AND EQUIPMENT:

RIGGING AIRBORNE CRANE-SHOVEL AND ATTACHMENTS

This change adds the procedures for rigging the Koehring 7 1/2-ton crane on a type V platform for low-velocity and LAPE airdrop. Also with this change, the distribution restriction statement is changed to read as follows: "DISTRIBUTION RESTRICTION. Approved for public release; distribution is unlimited." Please mark this change, as appropriate, on the cover and title (table of contents) page of the basic manual. With use of this statement a destruction notice is not required. Please delete it where it appears.

FM 10-548/TO 13C7-24-21, 3 May 1984, is changed as follows:

1. New or changed material is identified by a vertical bar in the margin opposite the changed material.
2. Remove old pages and insert new pages as indicated below:

Remove pages	Insert pages
i through iii	i through iii
	4-1 through 4-87
Glossary	Glossary-1
References	References-1

3. File this transmittal sheet in front of the publication for reference purposes.

DISTRIBUTION RESTRICTION. Approved for public release; distribution is unlimited.

By Order of the Secretaries of the Army and Air Force:

CARL E. VUONO
General, United States Army
Chief of Staff

Official:

JOHN A. FULMER
Colonel, United States Army
Acting The Adjutant General

MERRILL A. McPEAK
General, United States Air Force
Chief of Staff

CHARLES C. McDONALD
General, United States Air Force
Commander, Air Force Logistics Command

DISTRIBUTION:

Active Army, USAR, and ARNG: To be distributed in accordance with DA Form 12-11-E, requirements for FM 10-548, Airdrop of Supplies and Equipment: Rigging Airborne Crane-Shovel and Attachments (Qty rqr block no. 0930).

FIELD MANUAL
NO 10-548
TECHNICAL ORDER
NO 13C7-24-21

HEADQUARTERS
DEPARTMENTS OF THE ARMY
AND THE AIR FORCE
Washington, DC, 3 May 1984

AIRDROP OF SUPPLIES AND EQUIPMENT: RIGGING AIRBORNE CRANE-SHOVEL AND ATTACHMENTS

TABLE OF CONTENTS

		Paragraph	Page
PREFACE			iii
CHAPTER 1.	INTRODUCTION		
	Description of Items	1-1	1-1
	Special Considerations	1-2	1-1
CHAPTER 2.	RIGGING 7-TON AIRBORNE CRANE-SHOVEL		
	TYPE II PROCEDURES REMOVED	2-1	2-1
		2-2	2-1
		2-3	2-1
		2-4	2-4
		2-5	2-5
		2-6	2-7
		2-7	2-8
		2-8	2-12
		2-9	2-13
		2-10	2-14
		2-11	2-14
		2-12	2-14
		2-13	2-15
CHAPTER 3.	RIGGING CRANE-SHOVEL ATTACHMENTS		
	TYPE II PROCEDURES REMOVED	3-1	3-1
		3-2	3-1
		3-3	3-2

DISTRIBUTION RESTRICTION. Approved for public release; distribution is unlimited.

*This manual supersedes FM 10-548/TO 13C7-24-21, 29 August 1975.

	Paragraph	Page
[redacted]	3-4	3-3
	3-5	3-5
	3-6	3-5
	3-7	3-5
	3-8	3-5
	3-9	3-5
	3-10	3-9
	3-11	3-9

TYPE II PROCEDURES REMOVED

CHAPTER 4. RIGGING KOEHRING 7 1/2-TON CRANE ON A TYPE V PLATFORM

Section I. LOW-VELOCITY AIRDROP

Description of Load	4-1	4-1
Preparing Platform	4-2	4-1
Preparing and Positioning Honeycomb Stacks	4-3	4-3
Preparing Crane	4-4	4-19
Building and Positioning Parachute Release Support	4-5	4-38
Installing Lifting Slings	4-6	4-41
Positioning Crane	4-7	4-42
Lashing Crane	4-8	4-43
Building and Positioning Parachute Stowage Platform	4-9	4-47
Preparing, Attaching, and Lashing Parachute Protector Boards	4-10	4-52
Placing Load Cover	4-11	4-56
Installing Suspension Slings, Antitumble Slings, and Deadman's Tie	4-12	4-57
Stowing Cargo Parachutes	4-13	4-59
Installing Extraction System	4-14	4-63
Installing Release System	4-15	4-64
Installing Provisions for Emergency Restraints	4-16	4-67
Placing Extraction Parachutes	4-17	4-67
Marking Rigged Load	4-18	4-67
Equipment Required	4-19	4-67

Section II. LAPE AIRDROP

[redacted]	4-20	4-71
	4-21	4-71
	4-22	4-72
	4-23	4-73
	4-24	4-77
	4-25	4-77
	4-26	4-78
	4-27	4-82
	4-28	4-85
	4-29	4-85
	4-30	4-85

REMOVED: 95 MESSAGE TERMINATION OF LAPES

GLOSSARY Glossary-1

REFERENCES References-1

PREFACE

SCOPE

This manual is designed for use by all parachute riggers. It tells and shows how to rig the following cranes.

a. The 7-Ton Airborne Crane-Shovel. The 7-ton airborne crane-shovel is rigged for low-velocity airdrop from a C-130 or a C-141 aircraft.

b. The 3/8-Cubic Yard Crane-Shovel Attachments. The 3/8-cubic yard crane-shovel attachments are rigged for low-velocity airdrop from a C-130 or a C-141 aircraft.

c. The Koehring 7 1/2-Ton Crane. The Koehring 7 1/2-ton crane is rigged for low-velocity airdrop from a C-130 or a C-141 aircraft. It is also rigged for LAPE airdrop from a C-130 aircraft.

USER INFORMATION

The proponent of this publication is HQ TRADOC. You are encouraged to report any errors or omissions and to suggest ways for making this a better manual. Army personnel, send your comments on DA Form 2028 (Recommended Changes to Publications and Blank Forms) directly to:

Commander
US Army Quartermaster Center and School
ATTN: ATSM-DTP
Fort Lee, Virginia 23801-5036

Air Force personnel, send your reports on AFTO Form 22 (Technical Order Publication Improvement Report) through:

Headquarters
Military Airlift Command
(MAC/DOXT)
Scott AFB, Illinois 62225-5001

to:

Commander
US Army Quartermaster Center and School
ATTN: ATSM-DTP
Fort Lee, Virginia 23801-5036

Also send information copies of AFTO Form 22 to:

San Antonio ALC/MMILRA
Kelly AFB, Texas 78241-5000

CHAPTER 4
RIGGING KOEHRING 7 1/2-TON CRANE ON A TYPE V PLATFORM

Section I

LOW-VELOCITY AIRDROP

4-1. Description of Load

The Koehring 7 1/2-ton crane (Figure 4-1) is rigged on a 24-foot, type V platform for low-velocity airdrop. The crane is rigged with seven G-11A or G-11B cargo parachutes. The unrigged vehicle weighs approximately 24,215 pounds and is 347 3/8 inches long. It is 93 1/8 inches high and 95 3/4 inches wide.

4-2. Preparing Platform

Prepare a 24-foot, type V platform using two tandem links, two suspension links, and 44 clevis assemblies as shown in Figure 4-2.

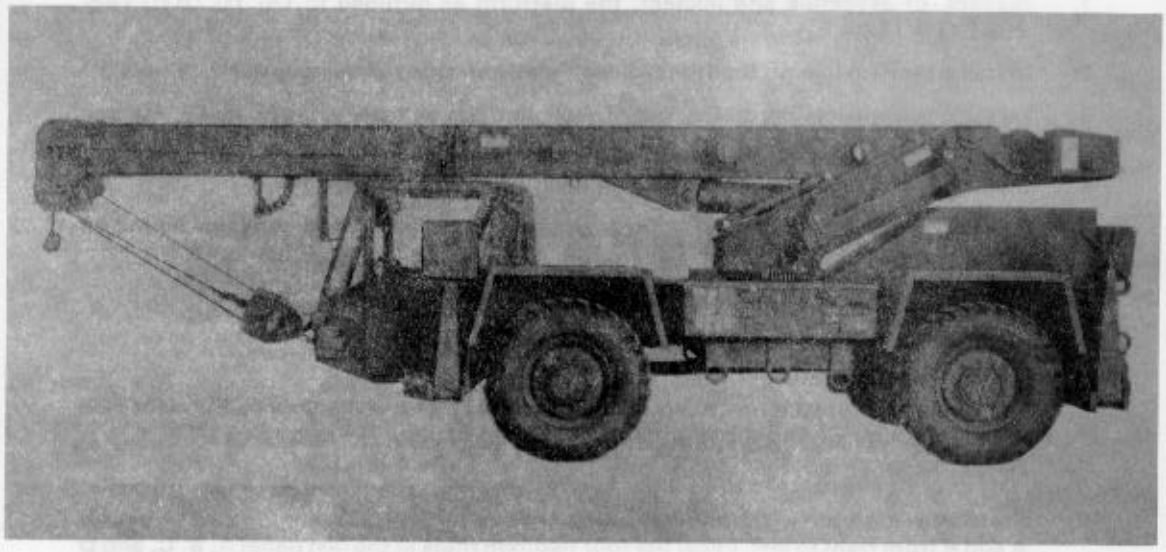

Figure 4-1. Koehring 7 1/2-ton crane

NOTES: 1. The nose bumper may or may not be installed.
2. Measurements given in this section are from the front edge of the platform, NOT from the front edge of the nose bumper.

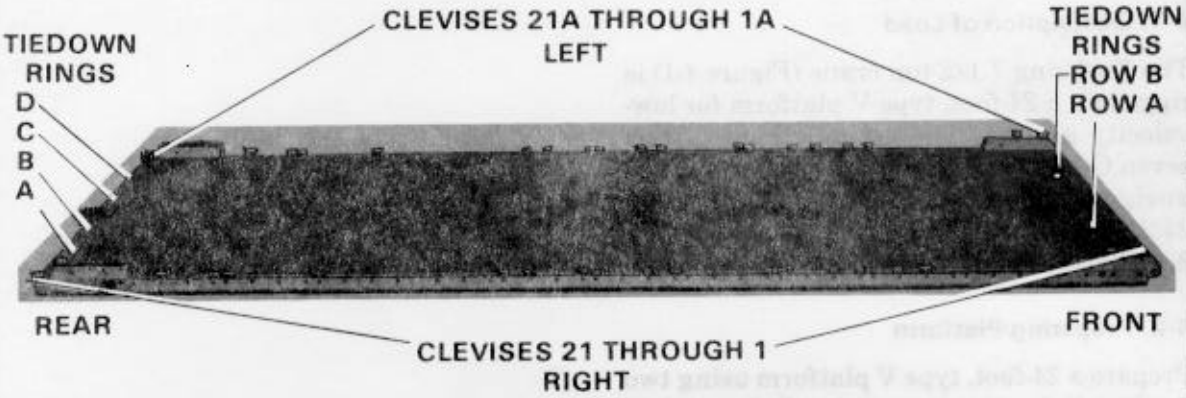

STEP:

1. Inspect, or assemble and inspect, the platform as outlined in TM 10-1670-268-20&P/TO 13C7-52-22.
2. Install a tandem link on the front of each platform side rail using holes 1, 2, and 3.
3. Install a suspension link on the rear of each platform side rail using holes 45, 46, and 47.
4. Install a clevis on bushings 1 and 3 on each front tandem link.
5. Starting at the front of each platform side rail, install a clevis to bushings bolted on holes 10, 11, 13, 14, 16, 17, 21, 22, 24, 25, 27, 28, 36, 40, 41, and 43.
6. Install a clevis on bushing 4 on each rear suspension link.
7. Install an inverted clevis on each platform side rail using the bushing bolted on hole 48. Attach two clevises to the inverted clevis on each rail.
8. Starting at the front of each platform, number the clevises bolted to the right side from 1 through 21 and those bolted to the left side from 1A through 21A.

   NOTE: Clevises 18, 19, and 21 are without spacers.
9. Starting at the front of the platform, label the two tiedown rings in the first 11 panels A and B from right to left. Label the four tiedown rings in the last panel A, B, C, and D from right to left. Starting with the first panel, number the rows of tiedown rings 1 through 12.

Figure 4-2. Platform prepared

4-3. Preparing and Positioning Honeycomb Stacks

Use the material in Table 4-1 to prepare 12 honeycomb stacks as shown in Figures 4-3 through 4-9. Position the stacks on the platform according to FM 10-500-2/TO 13C7-1-5 and as shown in Figure 4-10.

Table 4-1. Material required to build honeycomb stacks

Stack Number	Pieces	Width (Inches)	Length (Inches)	Material	Instructions
1	5	96	36	Honeycomb	See Figure 4-3.
	2	96	36	3/4-inch plywood	
	4	4	20	2- by 4-inch lumber	
	5	4	36	2- by 4-inch lumber	
	1	96	12	3/4-inch plywood	
	1	58	12	3/4-inch plywood	
2	7	16	9	Honeycomb	See Figure 4-4.
	1	16	9	3/4-inch plywood	
3	7	16	9	Honeycomb	See Figure 4-4.
	1	16	9	3/4-inch plywood	
4	1	16	36	Honeycomb	See Figure 4-5.
5	1	16	36	Honeycomb	See Figure 4-5.
6	1	16	36	Honeycomb	See Figure 4-5.
7	1	16	36	Honeycomb	See Figure 4-5.
8	8	33	67	Honeycomb	See Figure 4-6.
	3	33	67	3/4-inch plywood	
	3	4	67	2- by 4-inch lumber	
	1	4	56	2- by 4-inch lumber	

Table 4-1. Material required to build honeycomb stacks (continued)

Stack Number	Pieces	Width (Inches)	Length (Inches)	Material	Instructions
	1	4	48	2- by 4-inch lumber	
9	8	33	67	Honeycomb	See Figure 4-7.
	3	33	67	3/4-inch plywood	
	3	4	67	2- by 4-inch lumber	
	1	4	63	2- by 4-inch lumber	
	1	4	48	2- by 4-inch lumber	
10	6	18	6	Honeycomb	See Figure 4-8.
	1	18	6	3/4-inch plywood	
11	5	53	9	Honeycomb	See Figure 4-9.
	4	13 1/2	9	Honeycomb	
	2	13 1/2	9	3/4-inch plywood	
	1	26	9	3/4-inch plywood	
	1	26	9	Honeycomb	
12	5	96	36	Honeycomb	See Figure 4-3.
	2	96	36	3/4-inch plywood	
	4	4	20	2- by 4-inch lumber	
	5	4	36	2- by 4-inch lumber	
	1	96	12	3/4-inch plywood	
	1	58	12	3/4-inch plywood	

NOTE: These drawings are not drawn to scale.

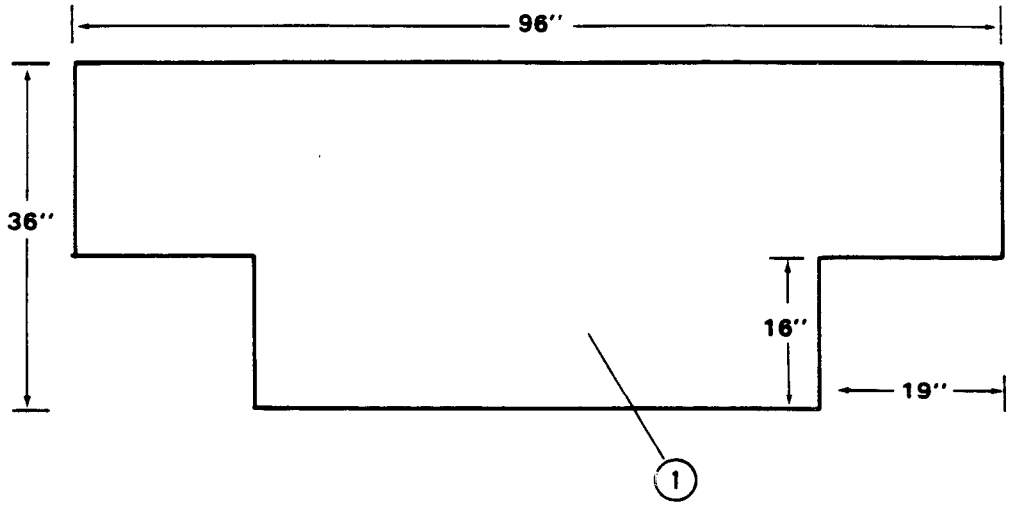

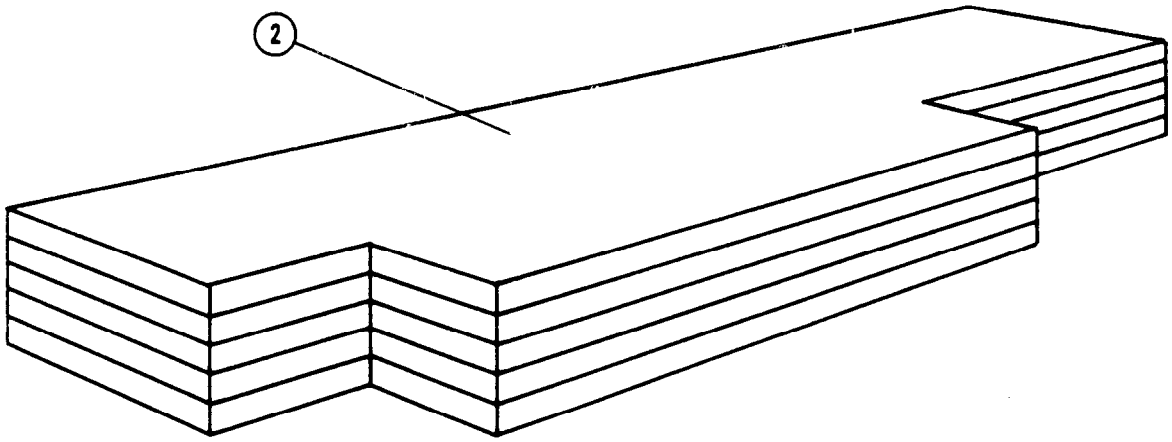

(1) Make a 19- by 16-inch cutout in two corners of five 96- by 36-inch pieces of honeycomb as shown.

(2) Glue the honeycomb together as the base.

Figure 4-3. Stacks 1 and 12 prepared

NOTE: These drawings are not drawn to scale.

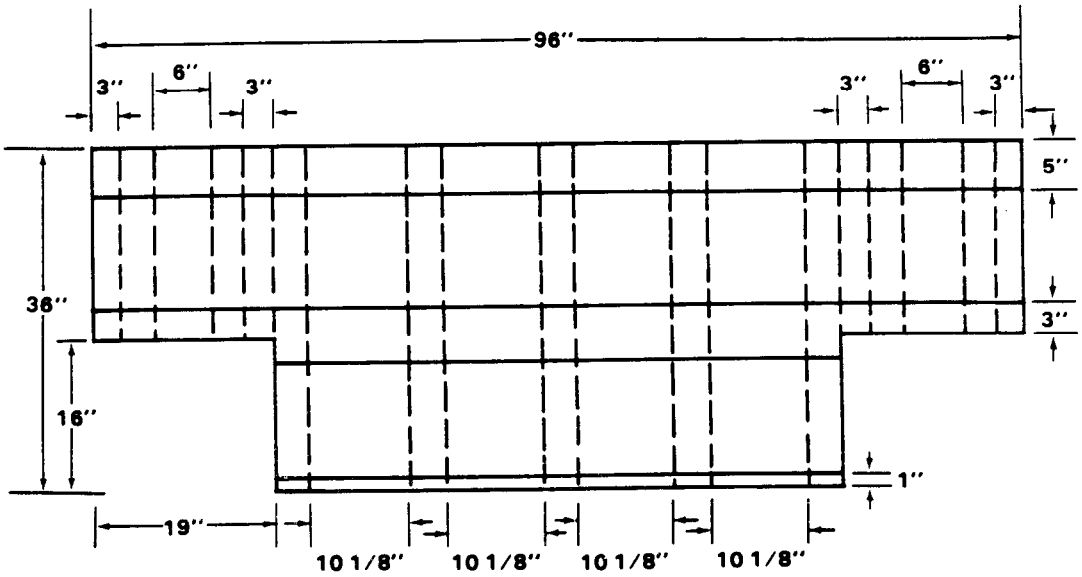

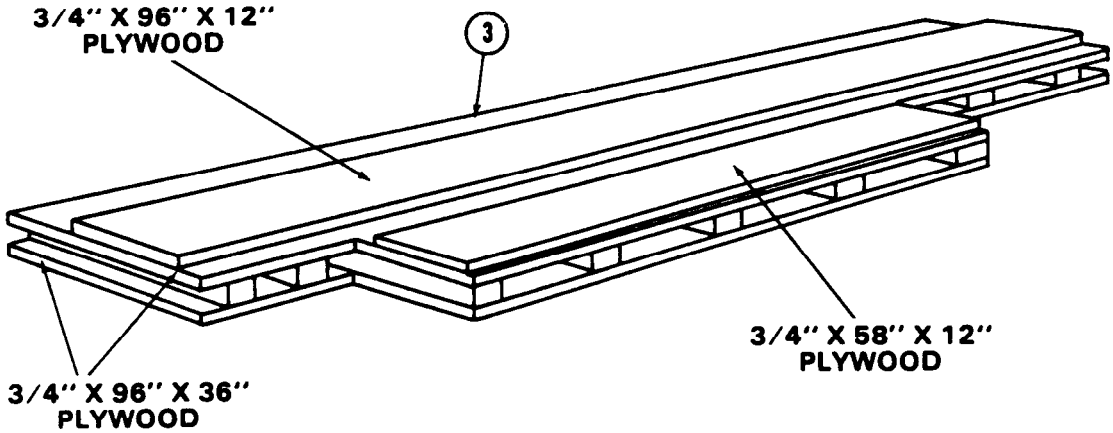

(3) Construct a load spreader as shown above using the material in Table 4-1 and sixpenny nails.

Figure 4-3. Stacks 1 and 12 prepared (continued)

NOTE: This drawing is not drawn to scale.

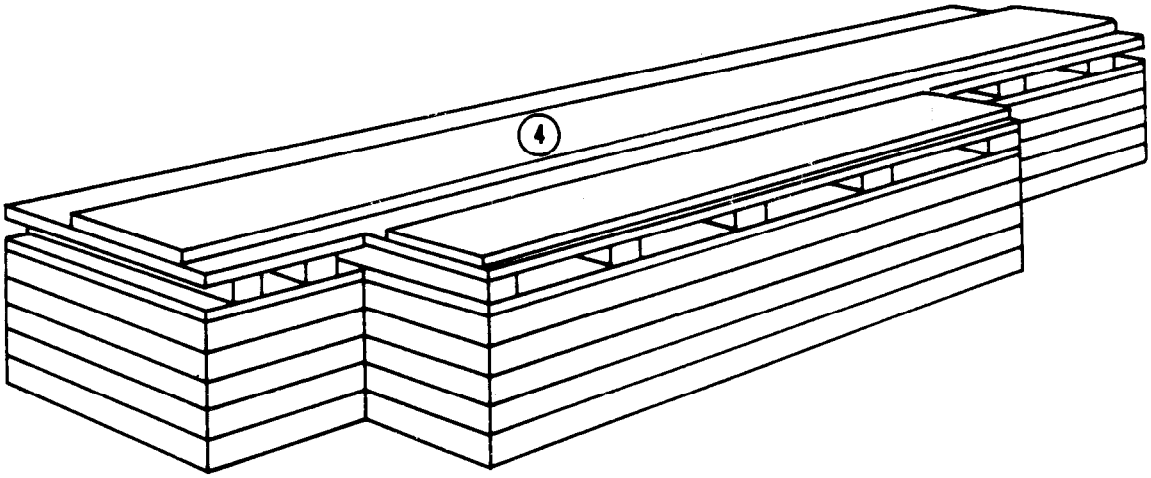

(4) Glue the load spreader to the top of the honeycomb.

Figure 4-3. Stacks 1 and 12 prepared (continued)

NOTE: This drawing is not drawn to scale.

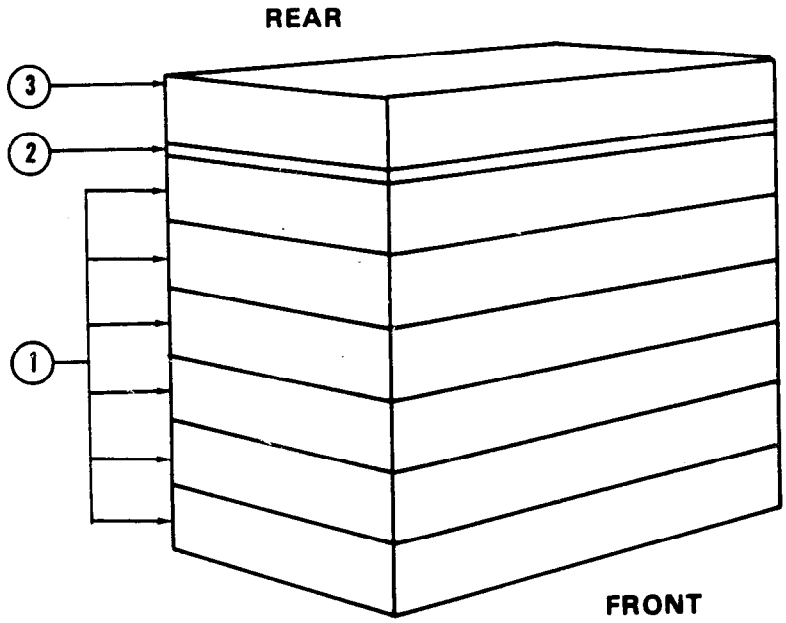

1. Glue six 16- by 9-inch pieces of honeycomb together as the base.
2. Glue a 3/4- by 16- by 9-inch piece of plywood to the top of the honeycomb.
3. Glue a 16- by 9-inch piece of honeycomb to the top of the plywood.

Figure 4-4. Stacks 2 and 3 prepared

NOTE: This drawing is not drawn to scale.

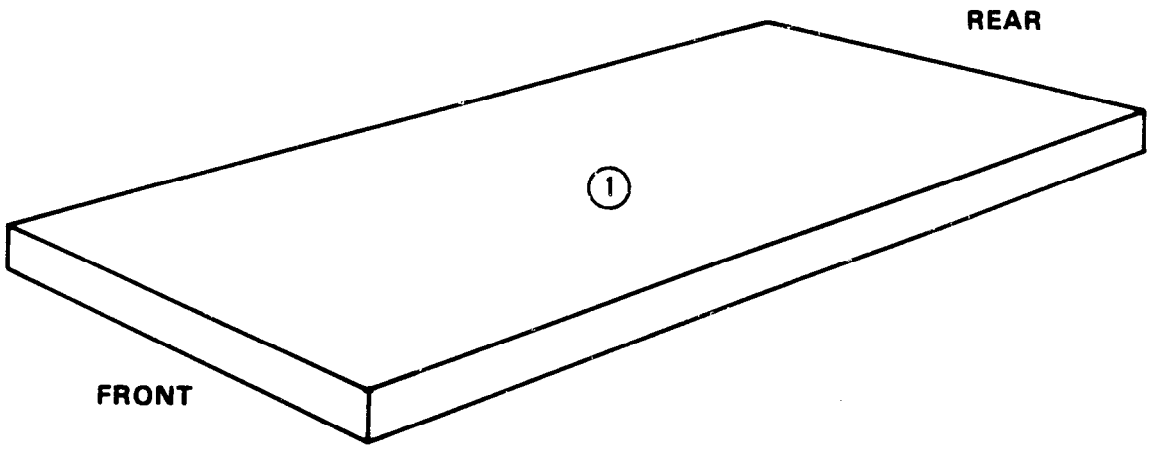

(1) Cut a 16- by 36-inch piece of honeycomb for stacks 4, 5, 6, and 7.

Figure 4-5. Stacks 4, 5, 6, and 7 prepared

NOTE: These drawings are not drawn to scale.

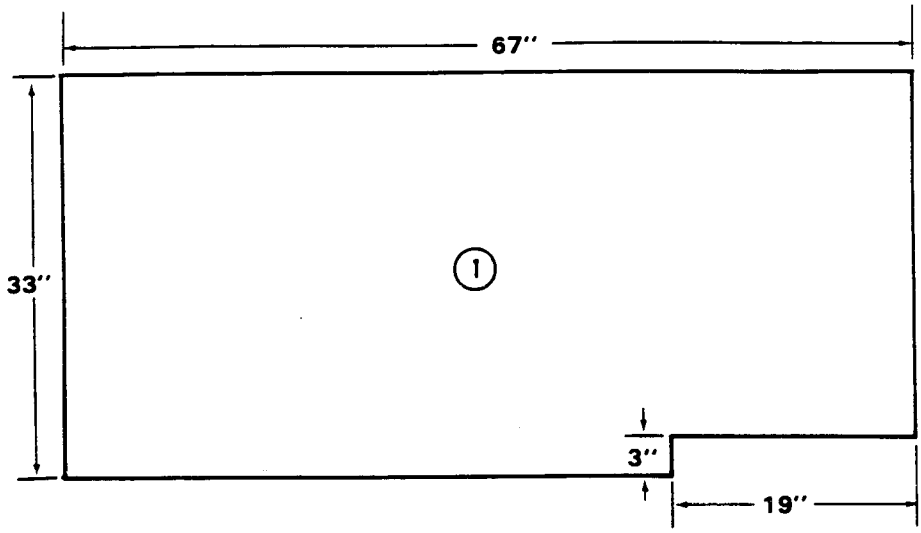

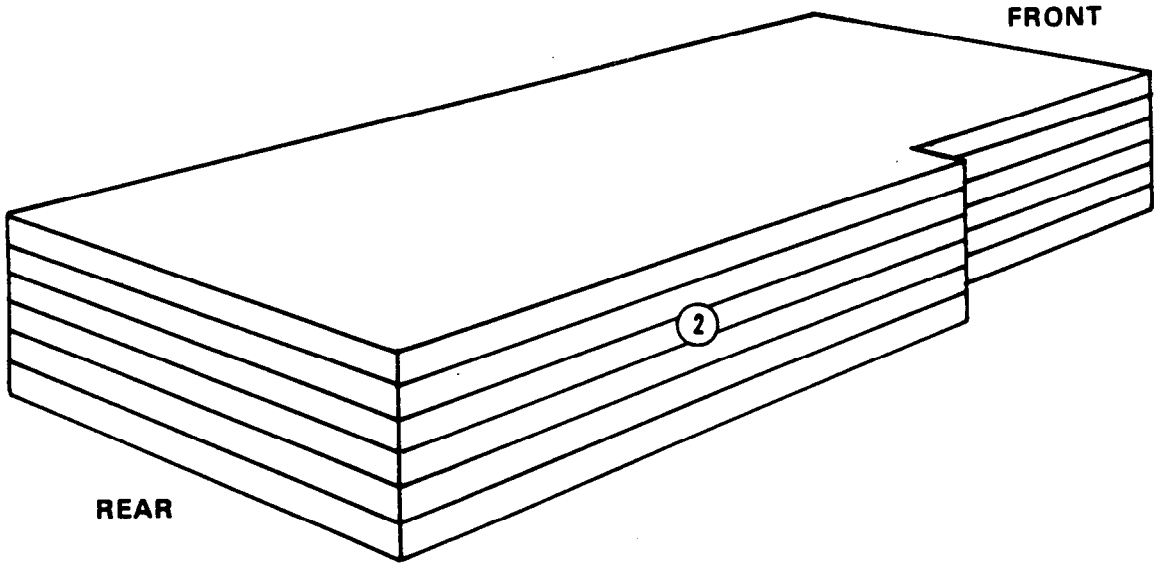

(1) Make a 3- by 19-inch cutout in the right front corner of six 33- by 67-inch pieces of honeycomb.

(2) Glue the honeycomb together as the base.

Figure 4-6. Stack 8 prepared

NOTE: These drawings are not drawn to scale.

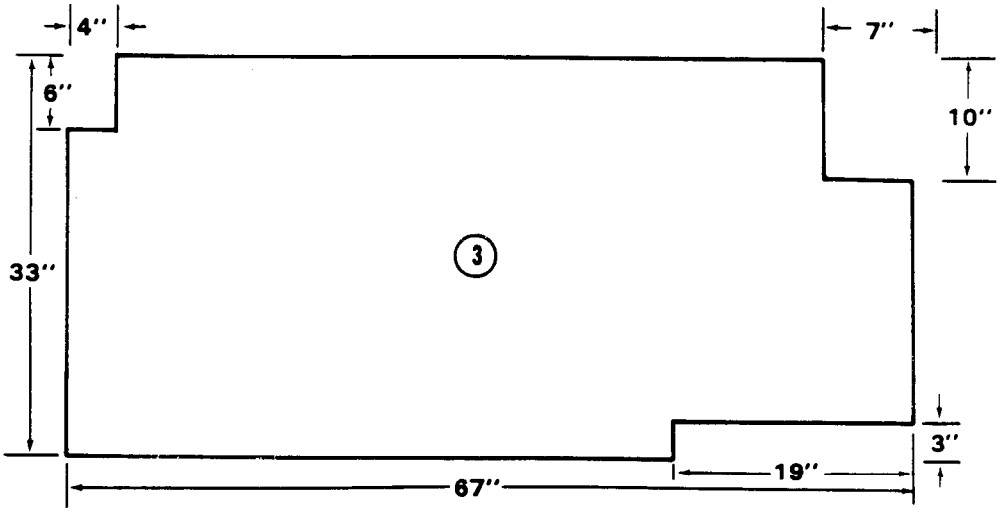

(3) Make the cutouts as shown above in two 33- by 67-inch pieces of honeycomb.

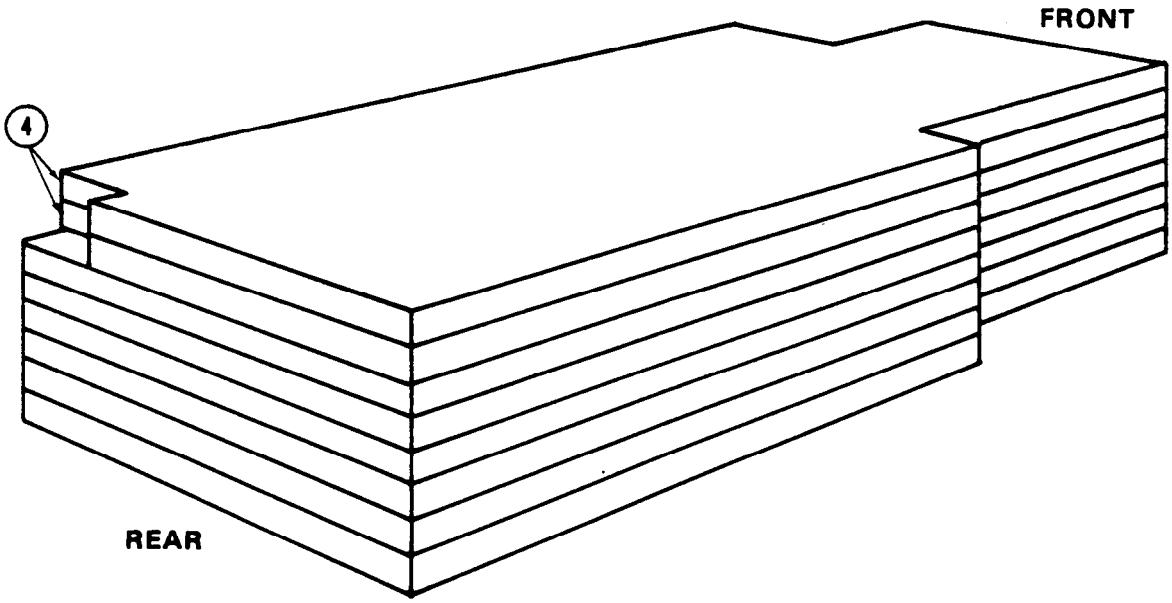

(4) Glue the pieces together, and place them on top of the base.

Figure 4-6. Stack 8 prepared (continued)

NOTE: These drawings are not drawn to scale.

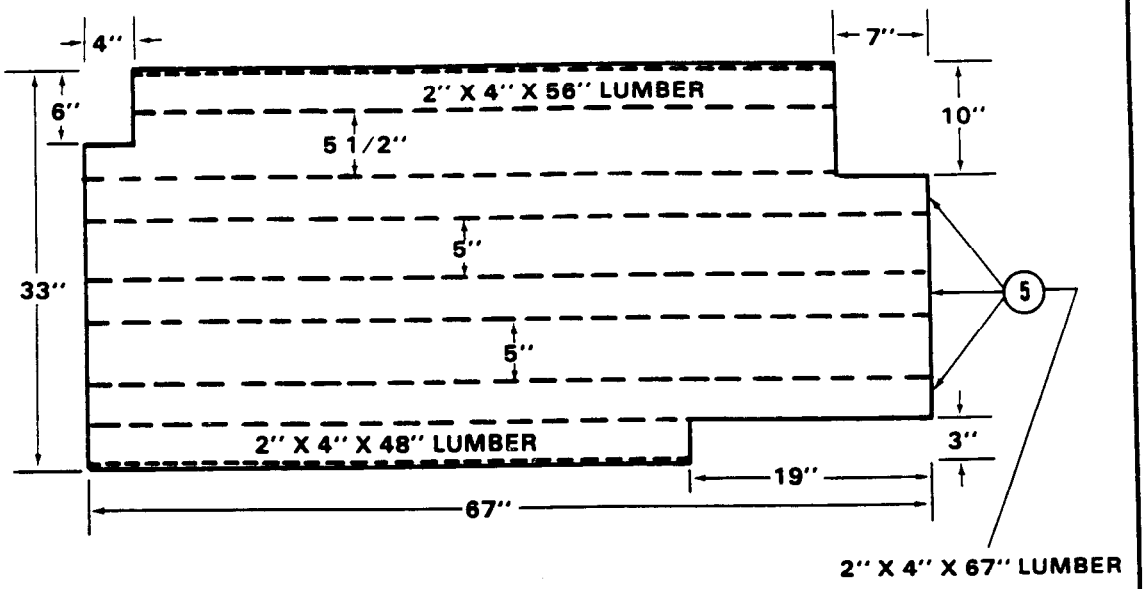

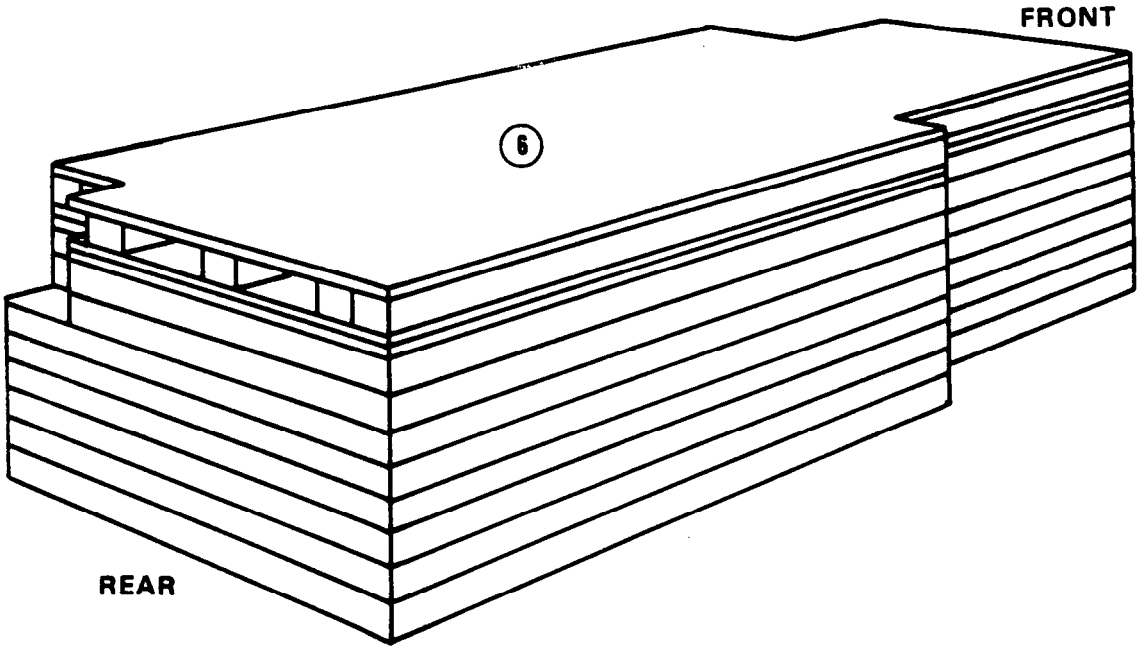

(5) Construct a load spreader as shown above using the material in Table 4-1 and sixpenny nails.

(6) Glue the load spreader to the top of the honeycomb.

Figure 4-6. Stack 8 prepared (continued)

NOTE: These drawings are not drawn to scale.

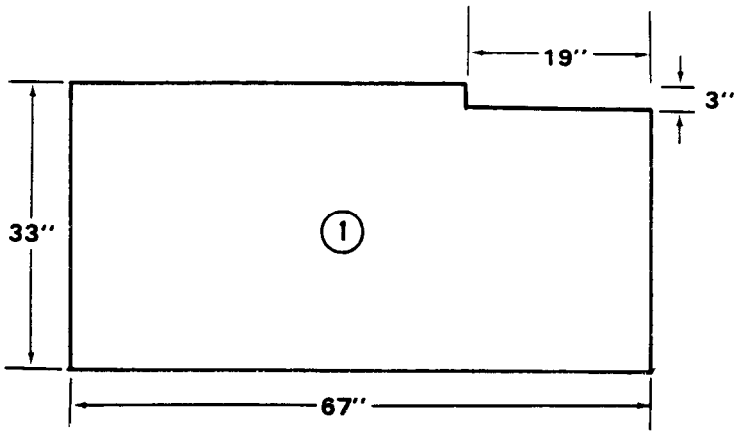

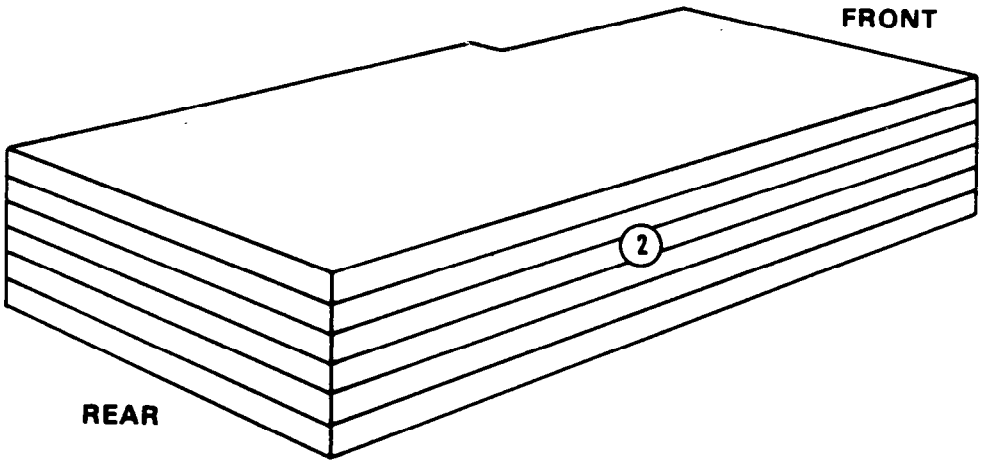

(1) Make a 3- by 19-inch cutout in the left front corner of six 33- by 67-inch pieces of honeycomb.

(2) Glue the honeycomb together as a base.

Figure 4-7. Stack 9 prepared

NOTE: These drawings are not drawn to scale.

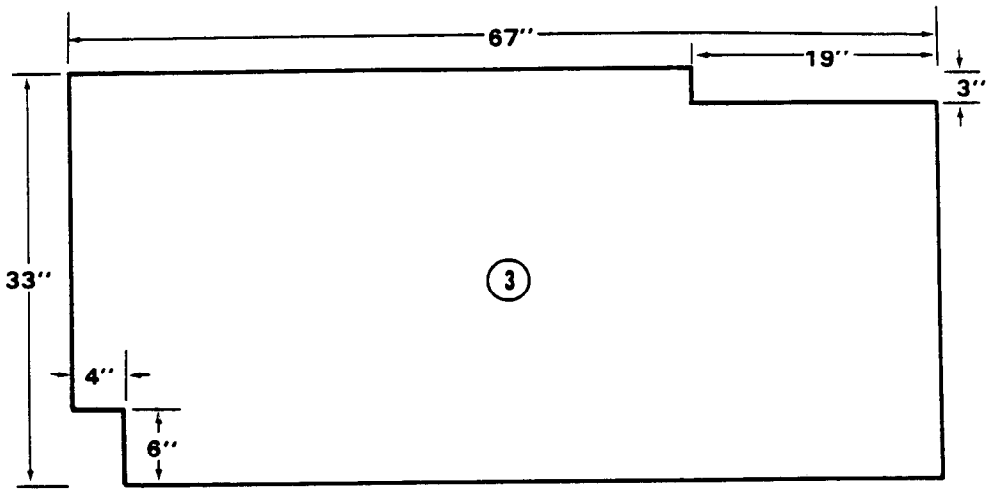

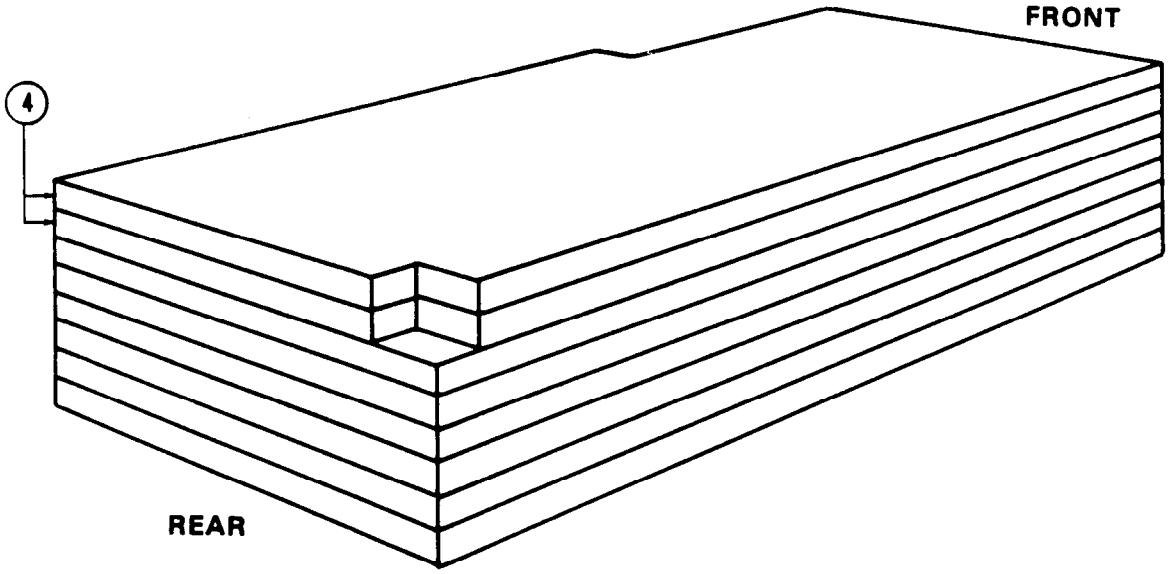

(3) Make a 3- by 19-inch cutout in the left front corner and a 6- by 4-inch cutout in the right rear corner of two 33- by 67-inch pieces of honeycomb.

(4) Glue the honeycomb to the top of the base.

Figure 4-7. Stack 9 prepared (continued)

NOTE: These drawings are not drawn to scale.

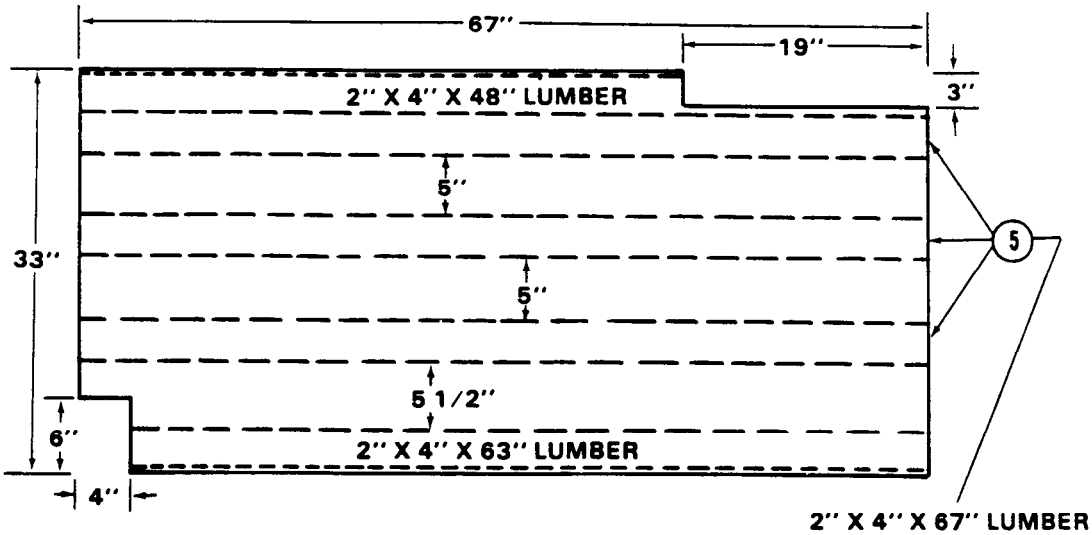

(5) Construct a load spreader as shown above using the material in Table 4-1 and sixpenny nails.

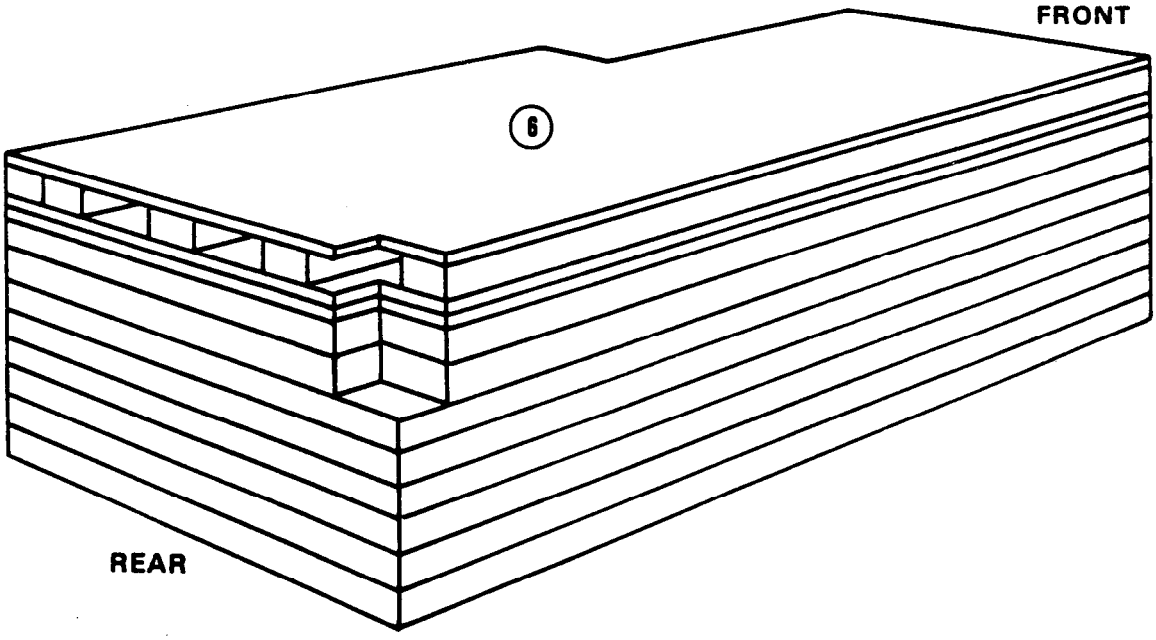

(6) Glue the load spreader to the top of the honeycomb.

Figure 4-7. Stack 9 prepared (continued)

NOTE: This drawing is not drawn to scale.

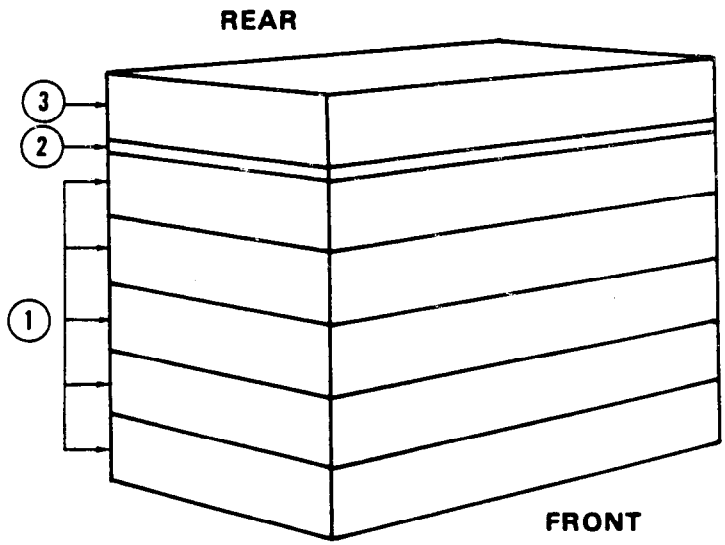

(1) Glue five 18- by 6-inch pieces of honeycomb together as the base.

(2) Glue a 3/4- by 18- by 6-inch piece of plywood to the top of the base.

(3) Glue an 18- by 6-inch piece of honeycomb to the top of the plywood.

Figure 4-8. Stack 10 prepared

NOTE: This drawing is not drawn to scale.

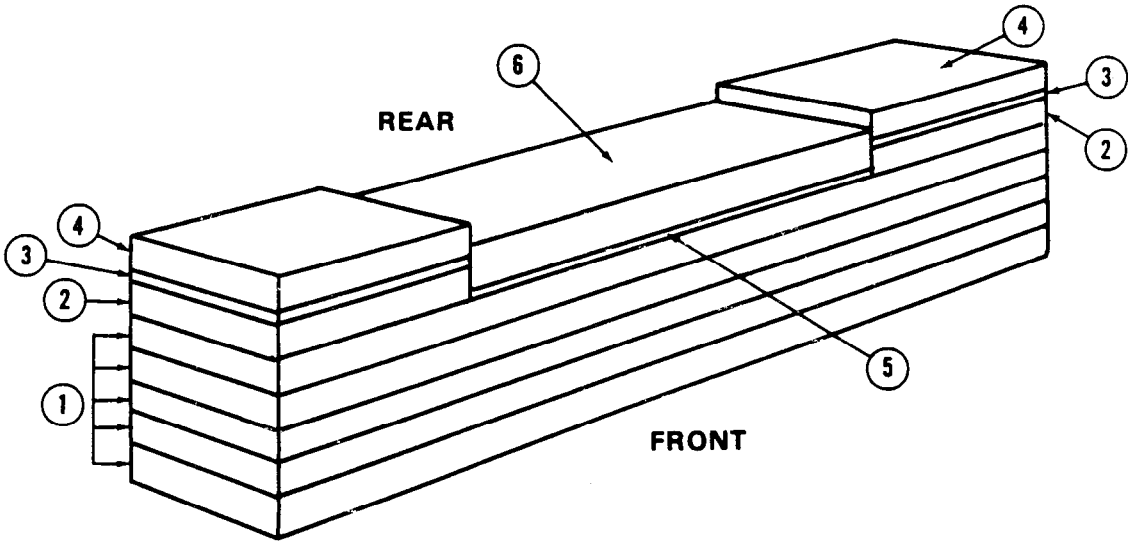

1. Glue five 53- by 9-inch pieces of honeycomb together as the base.
2. Glue one 13 1/2- by 9-inch piece of honeycomb on each side of the base.
3. Glue one 3/4- by 13 1/2- by 9-inch piece of plywood on top of each 13 1/2- by 9-inch piece of honeycomb.
4. Glue one 13 1/2- by 9-inch piece of honeycomb on top of each 3/4- by 13 1/2- by 9-inch piece of plywood.
5. Glue and center a 3/4- by 26- by 9-inch piece of plywood on top of the base.
6. Glue a 26- by 9-inch piece of honeycomb on top of the 3/4- by 26- by 9-inch plywood.

Figure 4-9. Stack 11 prepared

NOTE: This drawing is not drawn to scale.

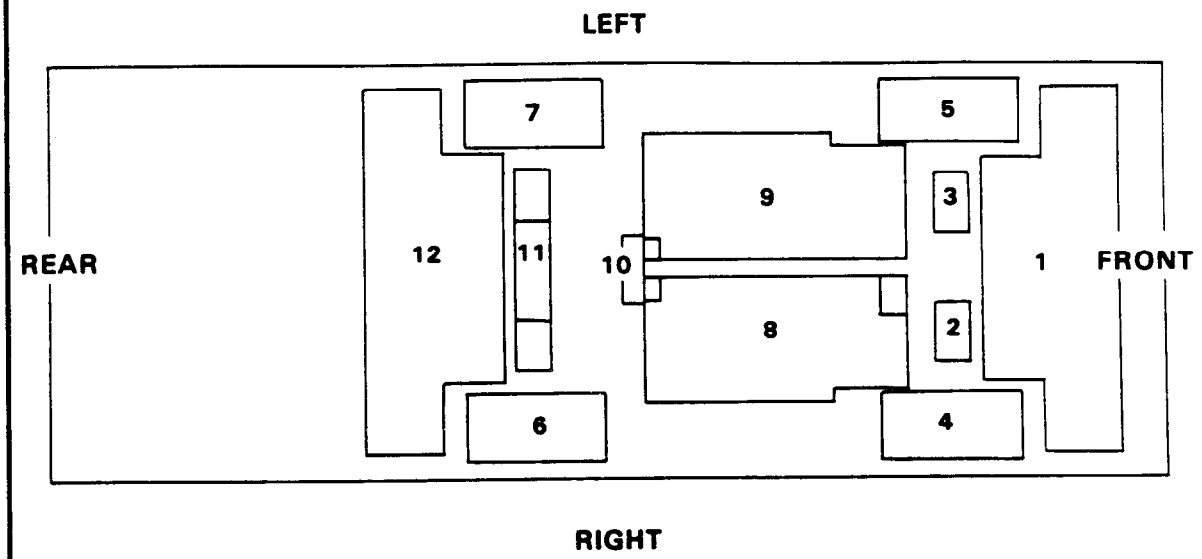

Stack Number	Position of Stack on Platform
	Place stack:
1	Centered 12 inches from the front edge of the platform.
2	3 1/4 inches from the rear edge of stack 1 and 28 inches from the right rail.
3	3 1/4 inches from the rear edge of stack 1 and 28 inches from the left rail.
4	38 inches from the front edge of the platform and 4 inches from the right rail.
5	38 inches from the front edge of the platform and 4 inches from the left rail.
6	145 inches from the front edge of the platform and 4 inches from the right rail.
7	145 inches from the front edge of the platform and 4 inches from the left rail.
8	7 1/4 inches from the rear edge of stack 2 and 17 inches from the right rail.
9	7 1/4 inches from the rear edge of stack 3 and 17 inches from the left rail.
10	Centered flush against stacks 8 and 9.
11	Centered 18 1/2 inches from the rear edge of stack 10.
12	Centered 3 inches from the rear edge of stack 11 and 81 inches from the rear edge of the platform.

Figure 4-10. Honeycomb stacks positioned on platform

4-4. Preparing Crane

Prepare the crane as described below and as shown in Figures 4-11 through 4-23.

a. Make sure the fuel tank is not more than 1/2 full.

b. Tape all lights and reflectors.

CAUTION
The outriggers must be down when the boom is being raised and lowered.

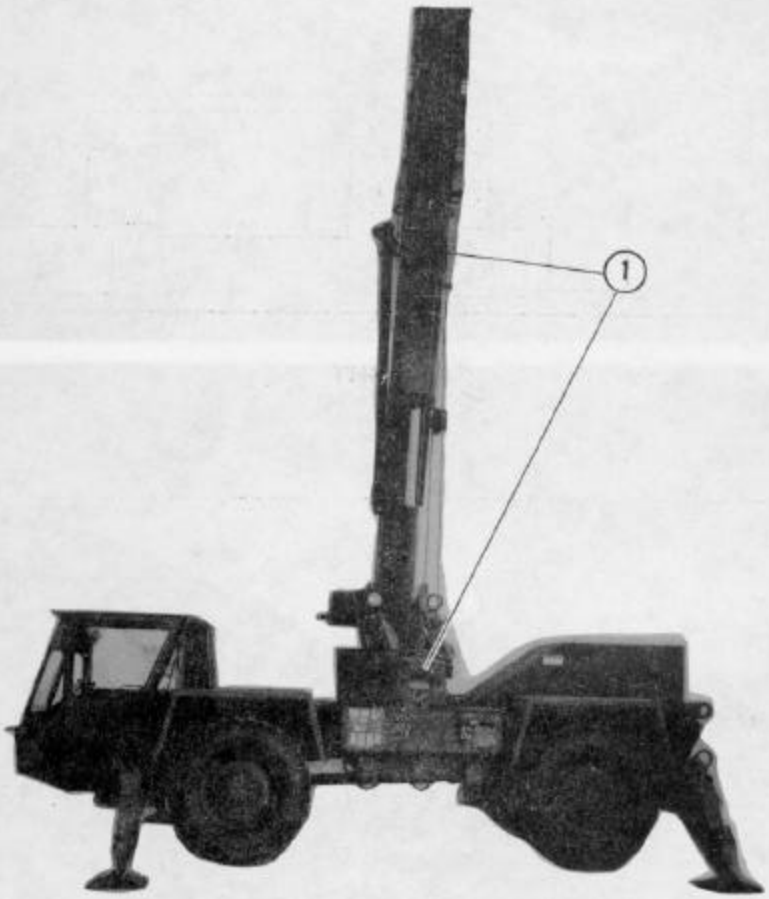

(1) **Raise the boom and lower the hook block into the OVM box.**

NOTE: The operator must remove the hook block from the boom and store it in the OVM box. The operator will place a 4- by 4- by 16-inch block under the cable and in front of the cable guide bar to prevent damage to the guide bar and rewind the cable.

Figure 4-11. OVM box prepared

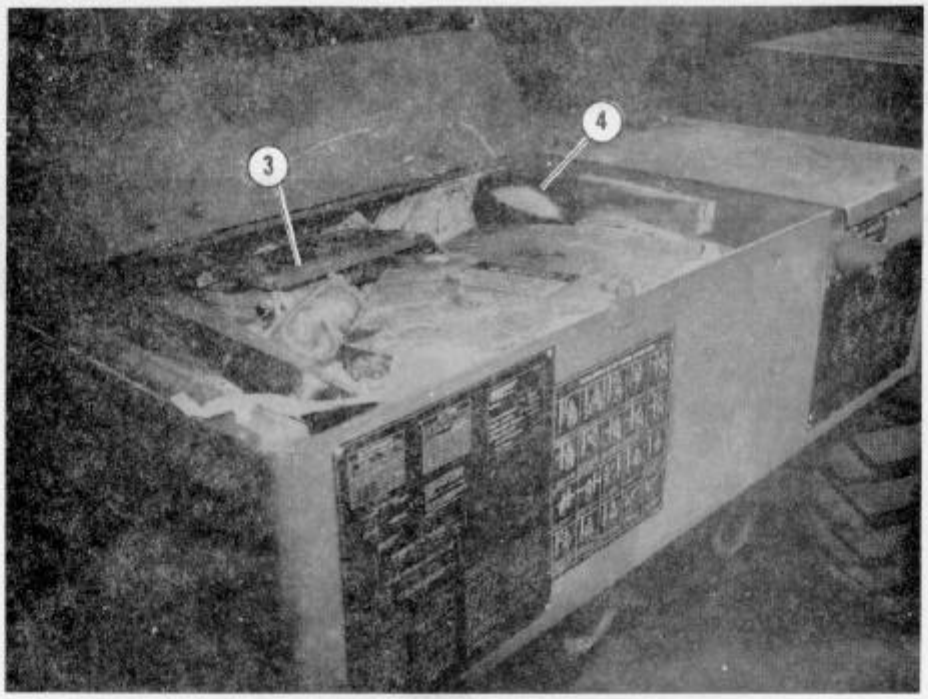

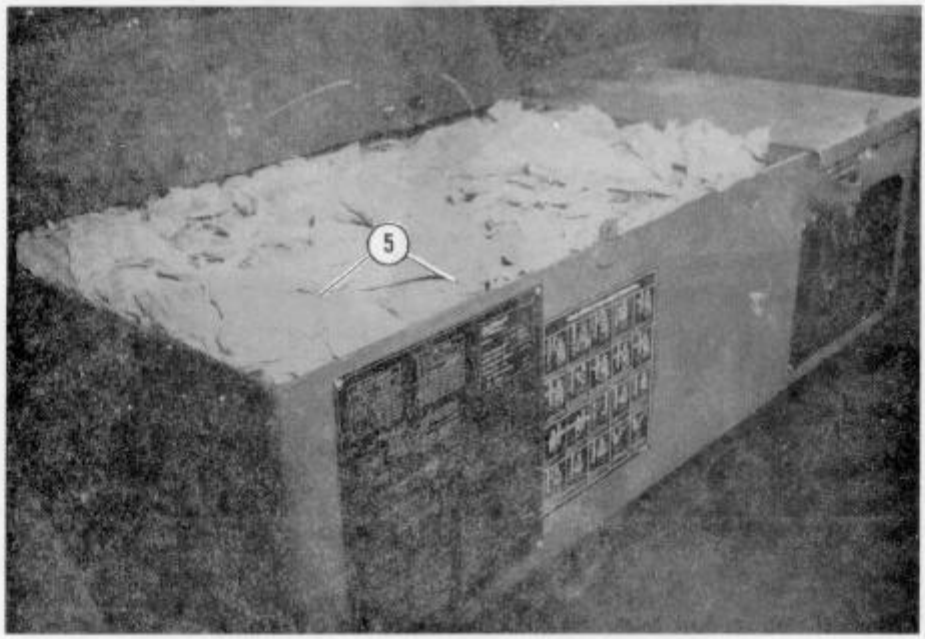

(3) Remove the weight counter balance, and place it in the OVM box.

(4) Remove the work light, and place it in the OVM box.

(5) Pad the OVM box with cellulose wadding.

Figure 4-11. OVM box prepared (continued)

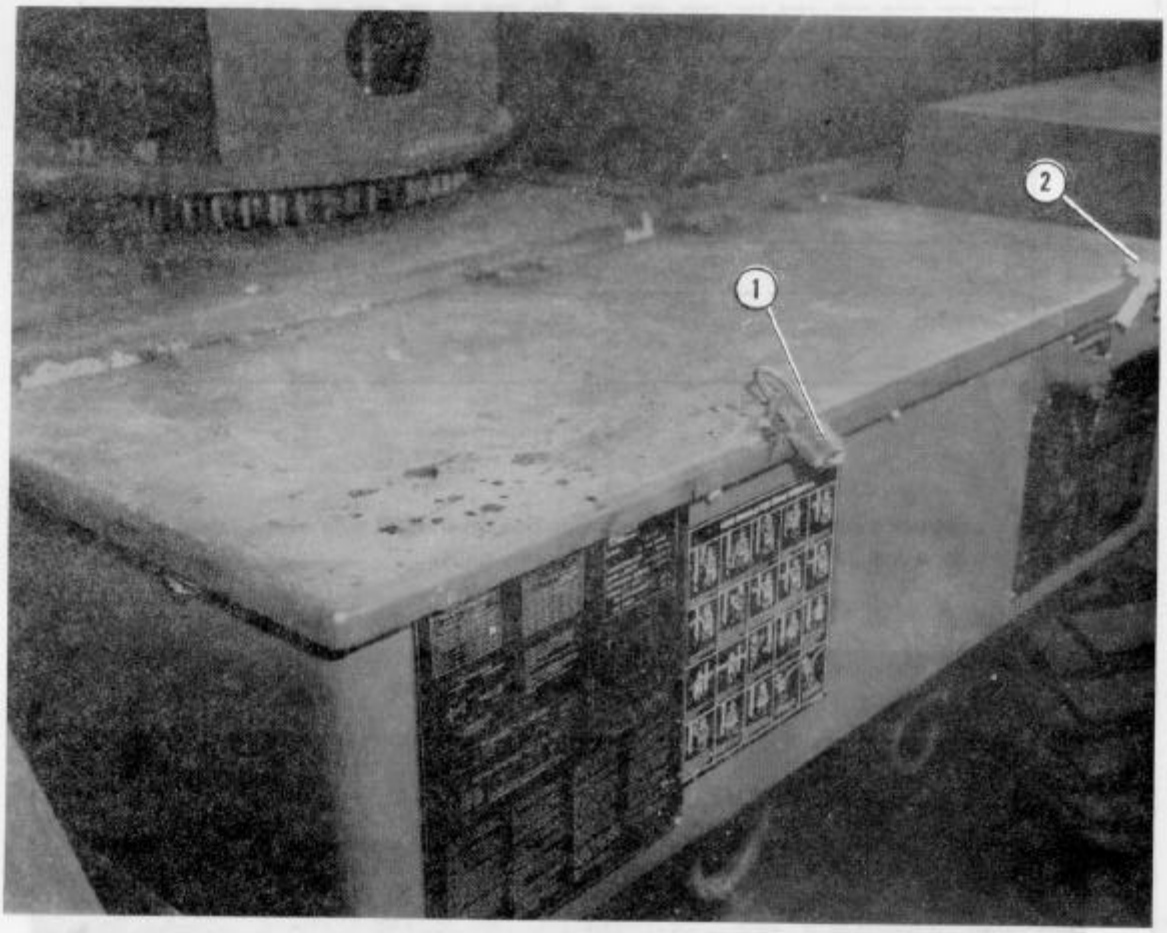

(1) Close the OVM box, and lock or safety it with 1/2-inch tubular nylon webbing.

(2) Safety the battery box with 1/2-inch tubular nylon webbing.

Figure 4-12. OVM and battery box secured

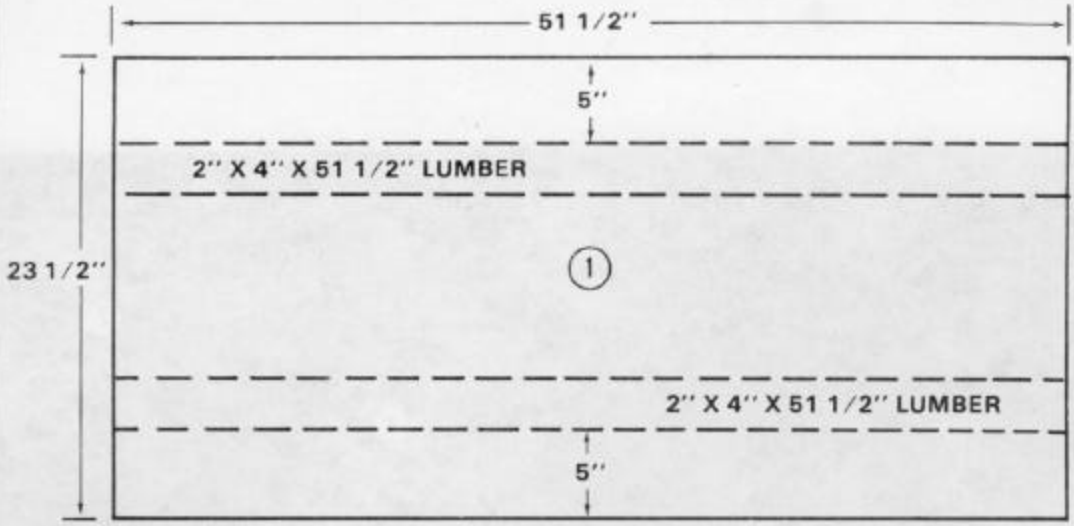

(1) Construct a support tray for the storage box on the left side of the crane as shown above using 3/4-inch plywood and sixpenny nails.

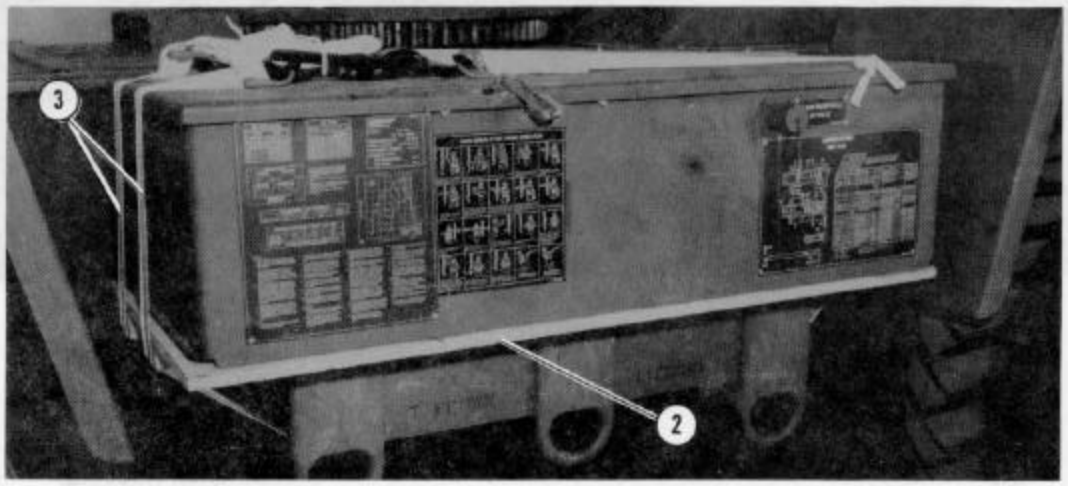

(2) Place the support tray under the storage box.

(3) Secure the support tray to the storage box using two 15-foot lashings. Secure the ends of the lashing with a D-ring and a load binder.

Figure 4-13. Storage box support tray constructed and secured

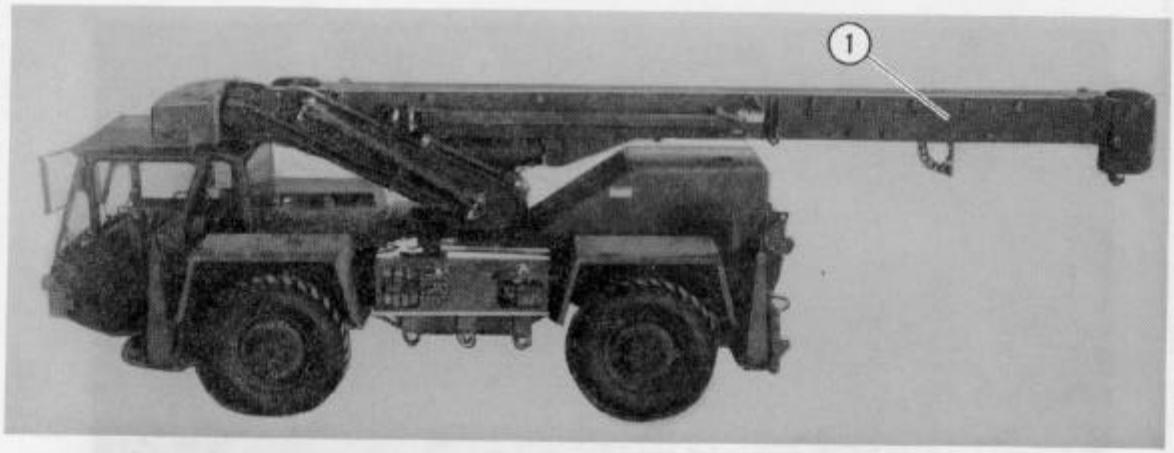

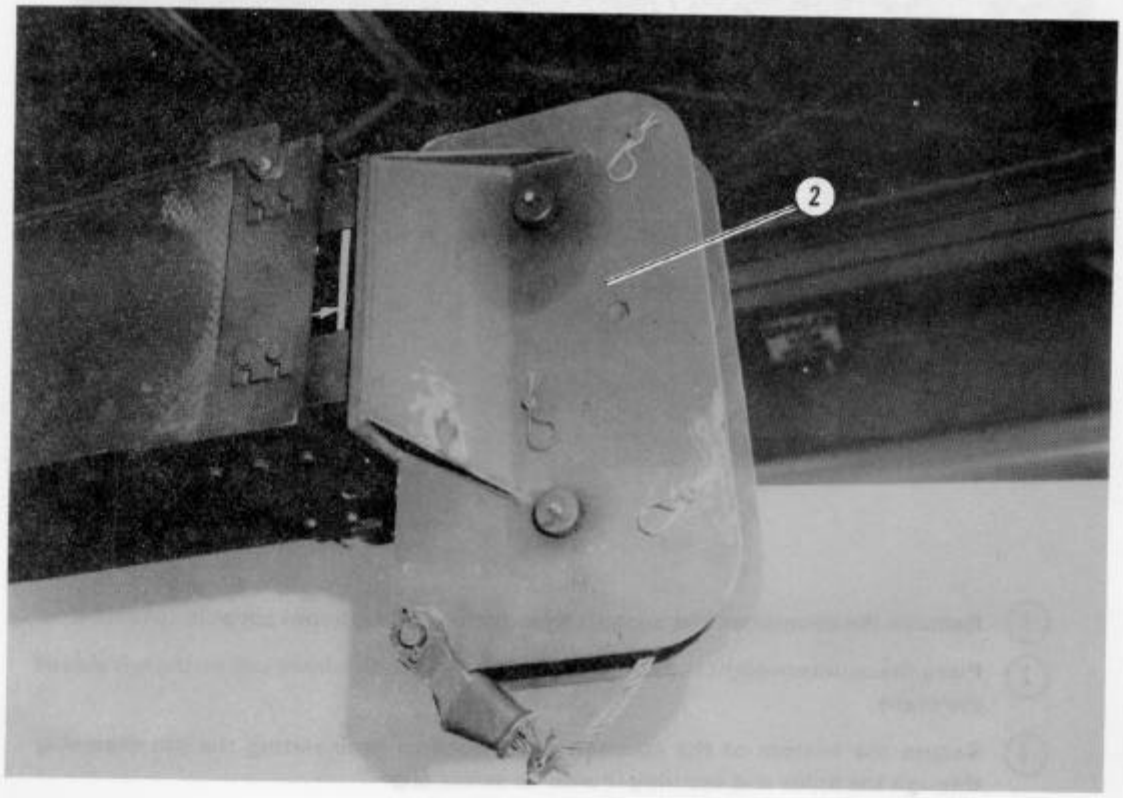

(1) Rotate the boom so that it overhangs the rear of the crane and is centered.

(2) Retract the boom, and fully lower it.

NOTE: Once the weight block is removed when lowering or rotating the boom, the override switch must be used. When the boom is fully lowered, there will be no polished material visible on the actuator cylinder.

Figure 4-14. Boom positioned

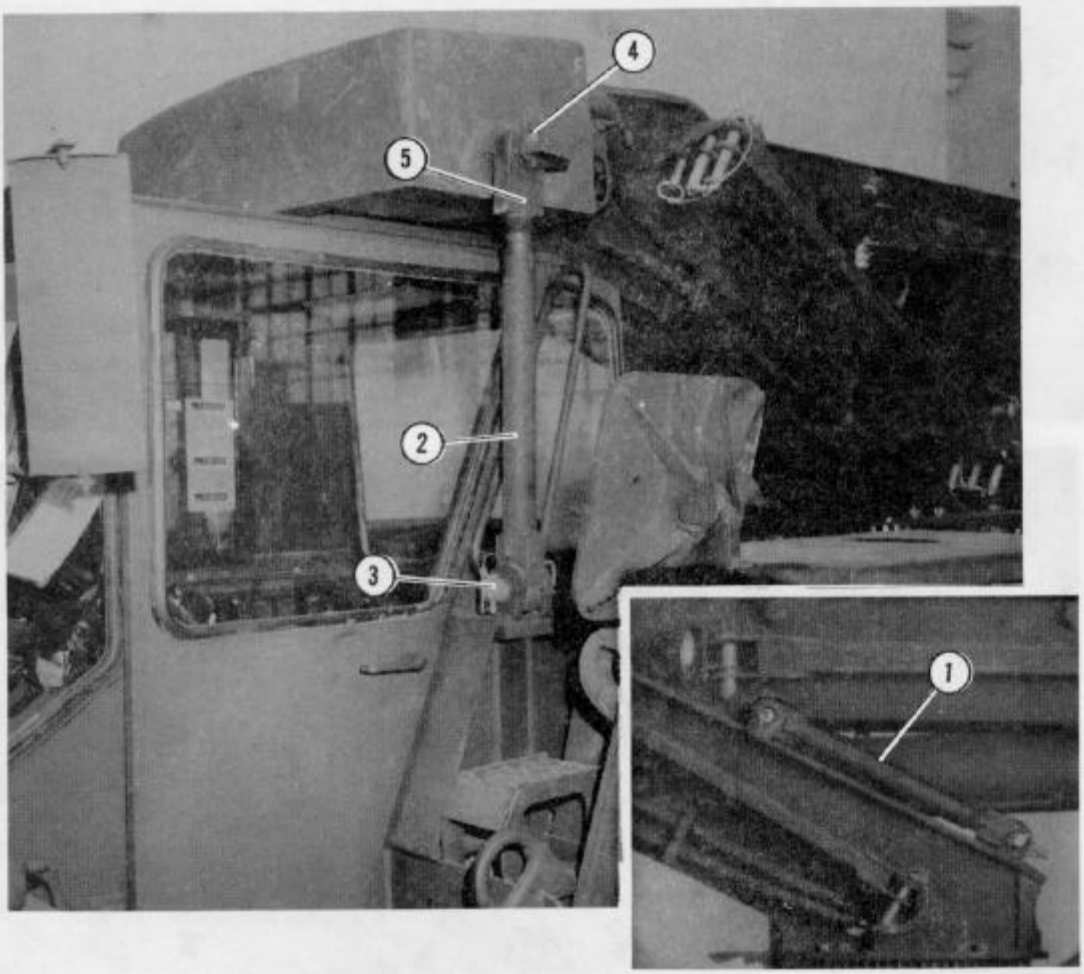

1. Remove the counterweight support from the top of the boom support structure.
2. Place the counterweight support in the fittings next to the driver cab on the left side of the crane.
3. Secure the bottom of the counterweight support by inserting the pin assembly through the holes and securing it with its safety clip.
4. Remove the nut from the side of the counterweight.
5. Adjust the top support by turning the free end until the nut can be placed through the support free end and back into the counterweight. Place the nut through the support and into the counterweight. Tighten the nut.
6. Repeat the procedures in steps 1 through 5 for the right side of the cab.

Figure 4-15. Counterweight supports installed

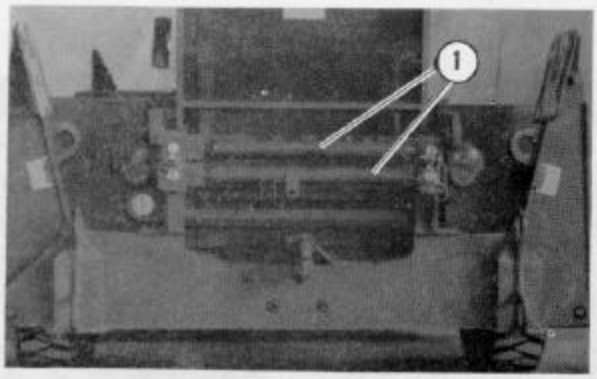

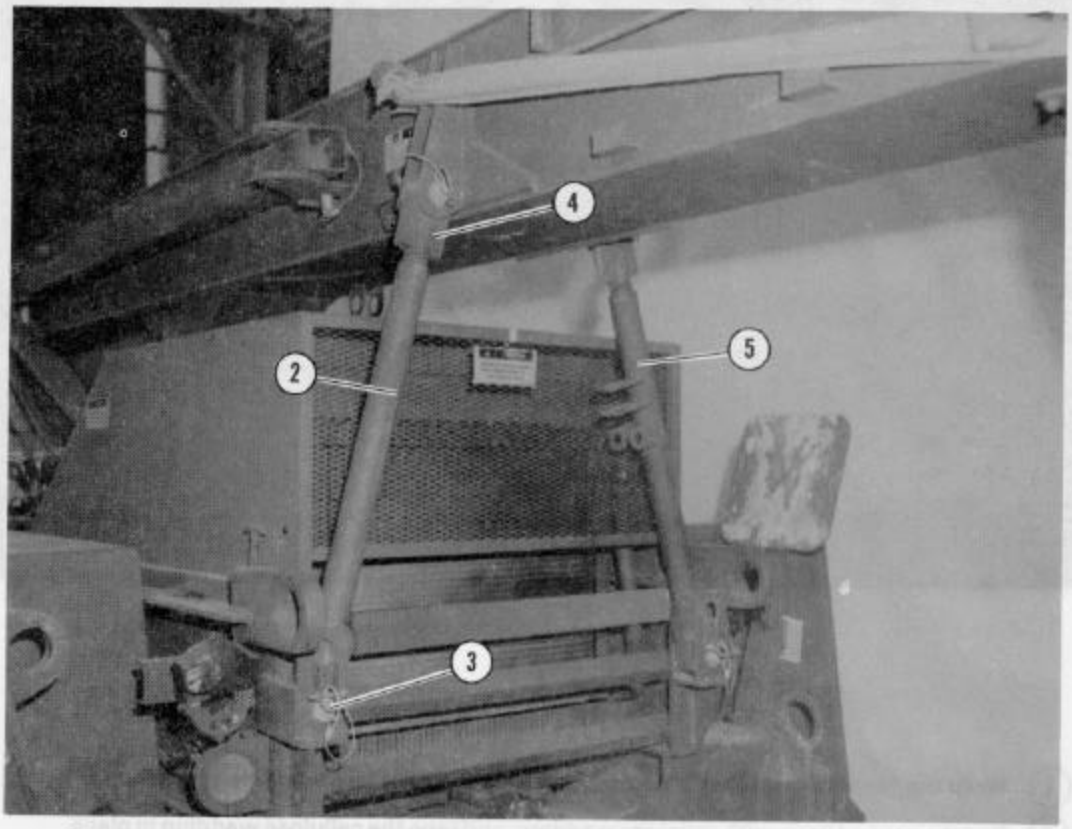

1. Remove the boom support from the rear of the crane.
2. Place a boom support on the left side of the boom.
3. Secure the bottom of the boom support by inserting the pin assembly through the holes and securing it.
4. Adjust the top support by turning the free end until the pin assembly can be inserted through the top support and the boom support. Insert the pin assembly, and secure it.
5. Repeat the procedures in steps 1 through 4 for the right side of the boom.

Figure 4-16. Boom supports installed

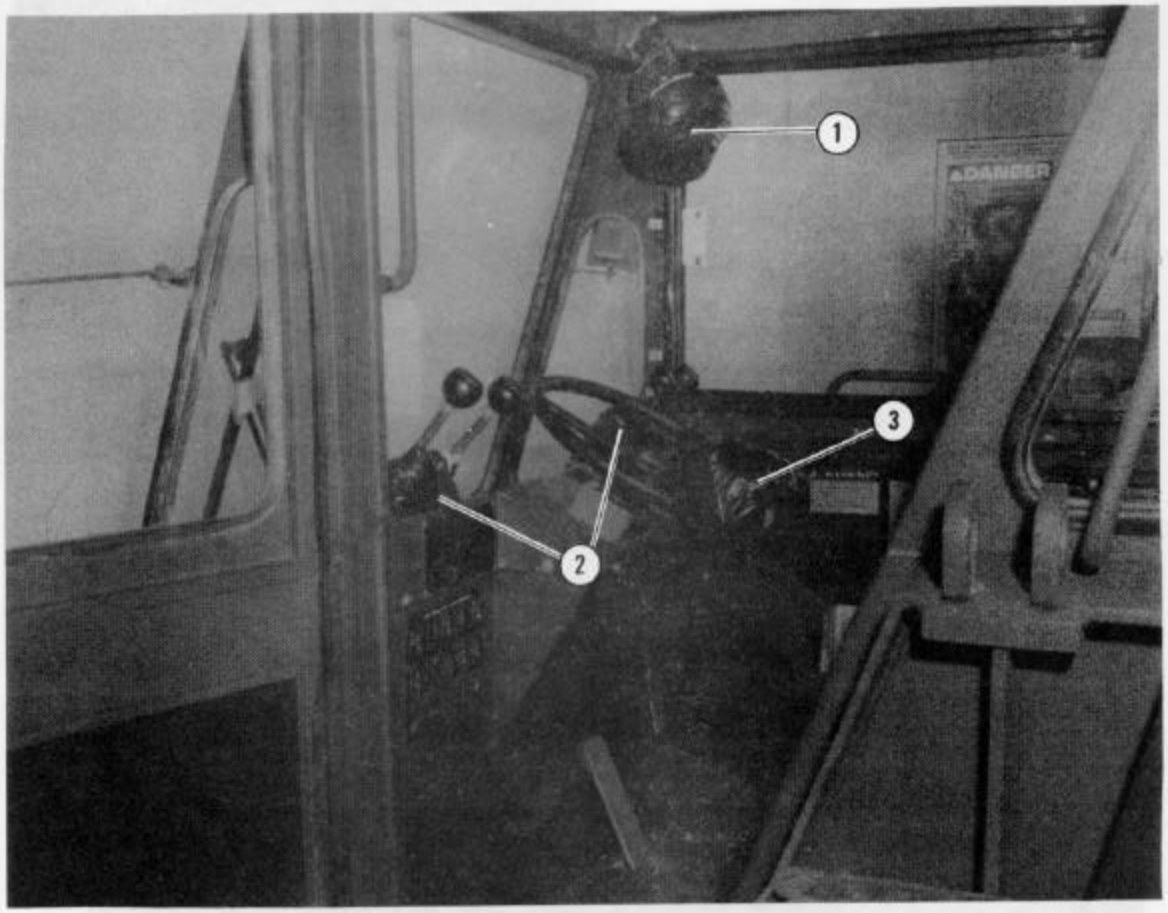

(1) Wrap the fan with cellulose wadding, and tape the cellulose wadding in place.

(2) Pad the control lever with cellulose wadding, and tape the cellulose wadding in place.

(3) Place the air breather cover on the steering wheel. Pad it with cellulose wadding, and tape it to the steering wheel.

Figure 4-17. Inside of cab prepared

NOTES: 1. Tape the edges of each piece of honeycomb used in preparing the cab.

2. When placing honeycomb on the cab, temporarily tape the honeycomb to the cab until it is secured with type III nylon cord.

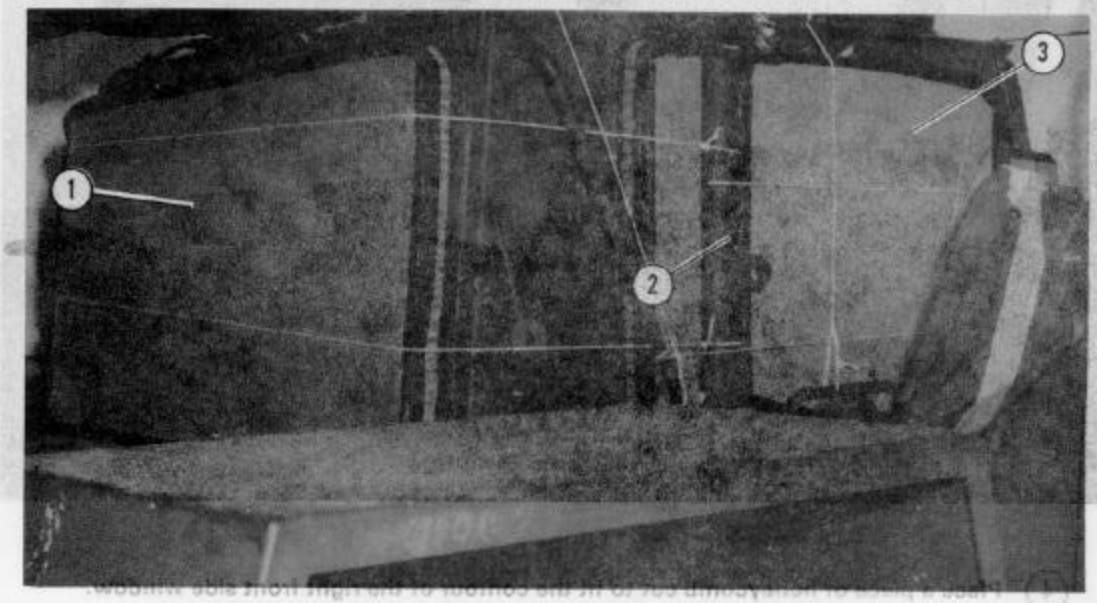

1. Place a 23- by 41-inch piece of honeycomb on the rear window.
2. Place a 6- by 26-inch piece of honeycomb on the right rear side window.
3. Place a 25- by 26-inch piece of honeycomb on the right side window.

Figure 4-18. Cab prepared

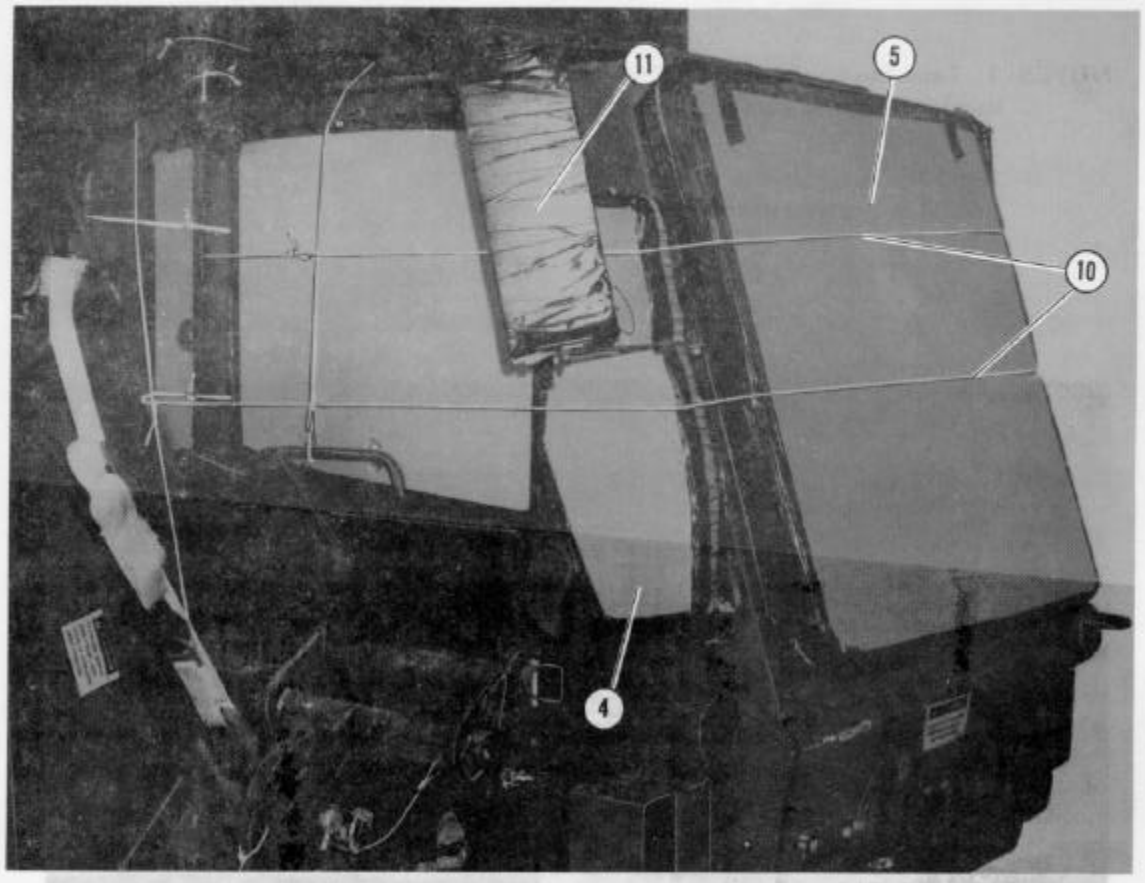

(4) Place a piece of honeycomb cut to fit the contour of the right front side window.

(5) Place a 36- by 41-inch piece of honeycomb on the front of the windshield.

(6) Place a piece of honeycomb cut to fit the contour of the left rear side window (not shown).

(7) Place a 27- by 45-inch piece of honeycomb on the left side window (not shown).

(8) Repeat the procedure in step 3 for the left side window (not shown).

(9) Place a piece of honeycomb cut to fit the contour of the front and rear side windows (not shown).

(10) Secure the honeycomb in place with type III nylon cord.

(11) Wrap the right and left side mirrors with cellulose wadding, and tape the cellulose wadding in place.

Figure 4-18. Cab prepared (continued)

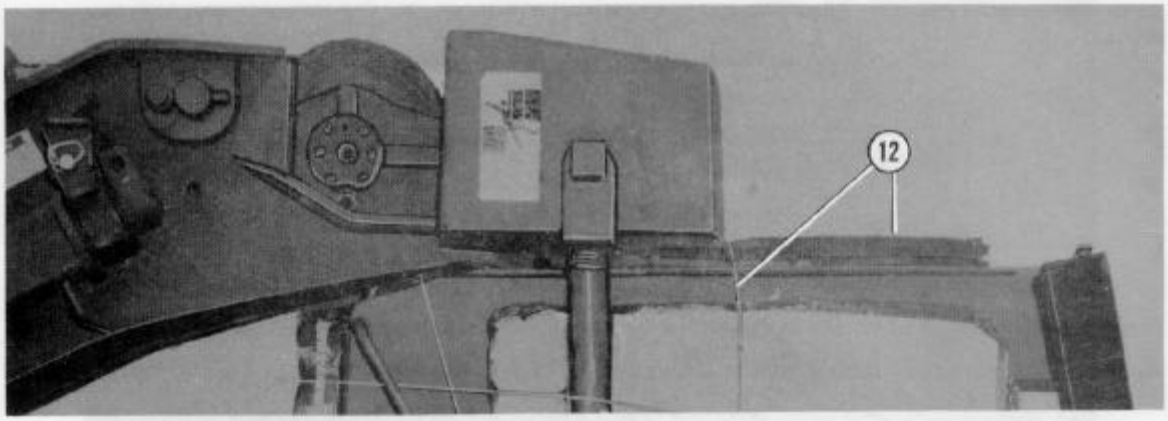

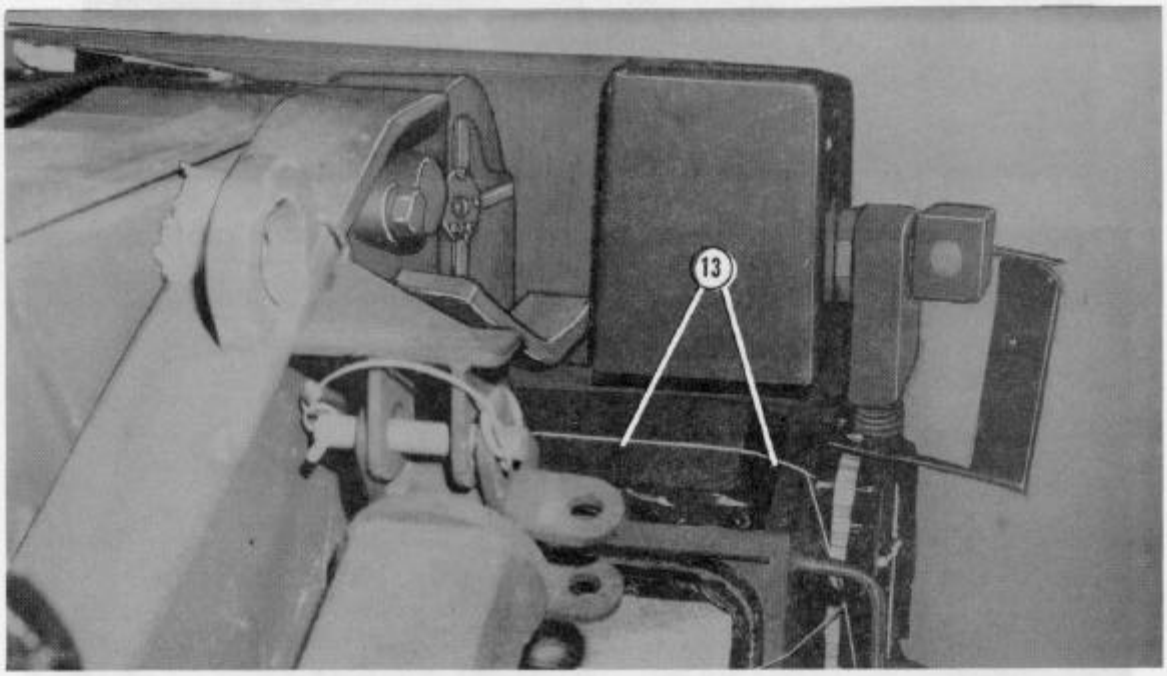

(12) **Place three 30- by 36 1/2-inch pieces of felt on the roof of the cab. Secure them in place with type III nylon cord.**

(13) **Place an 8- by 36-inch piece of felt on the top rear window of the cab. Secure it in place with tape and type III nylon cord.**

Figure 4-18. Cab prepared (continued)

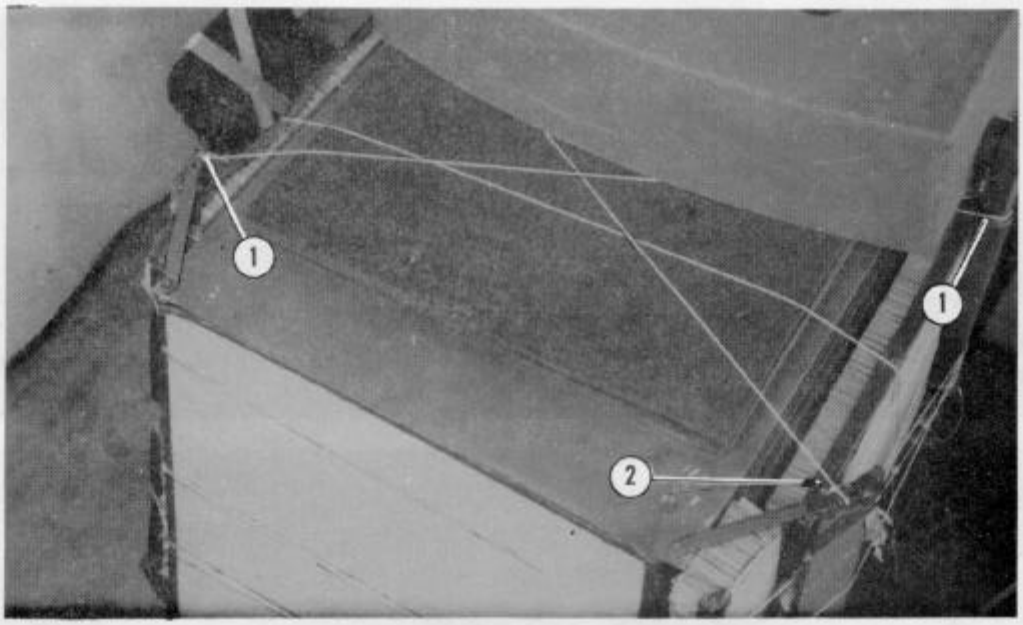

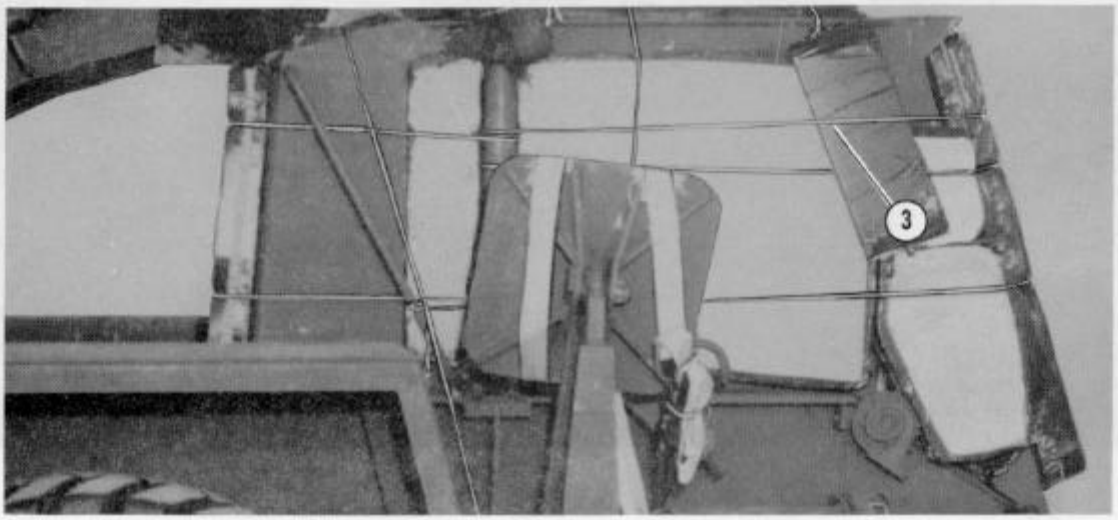

(1) Tie one end of a length of type III nylon cord to the top right mirror frame. Pass the free end over the roof of the cab, and tie it to the left boom support.

(2) Repeat the procedures in step 1 for the left mirror using the right boom support.

(3) Tie one end of a length of type III nylon cord to the right counterweight support. Pass the free end around the front of the cab, and tie it to the left counterweight support.

Figure 4-19. Mirrors secured

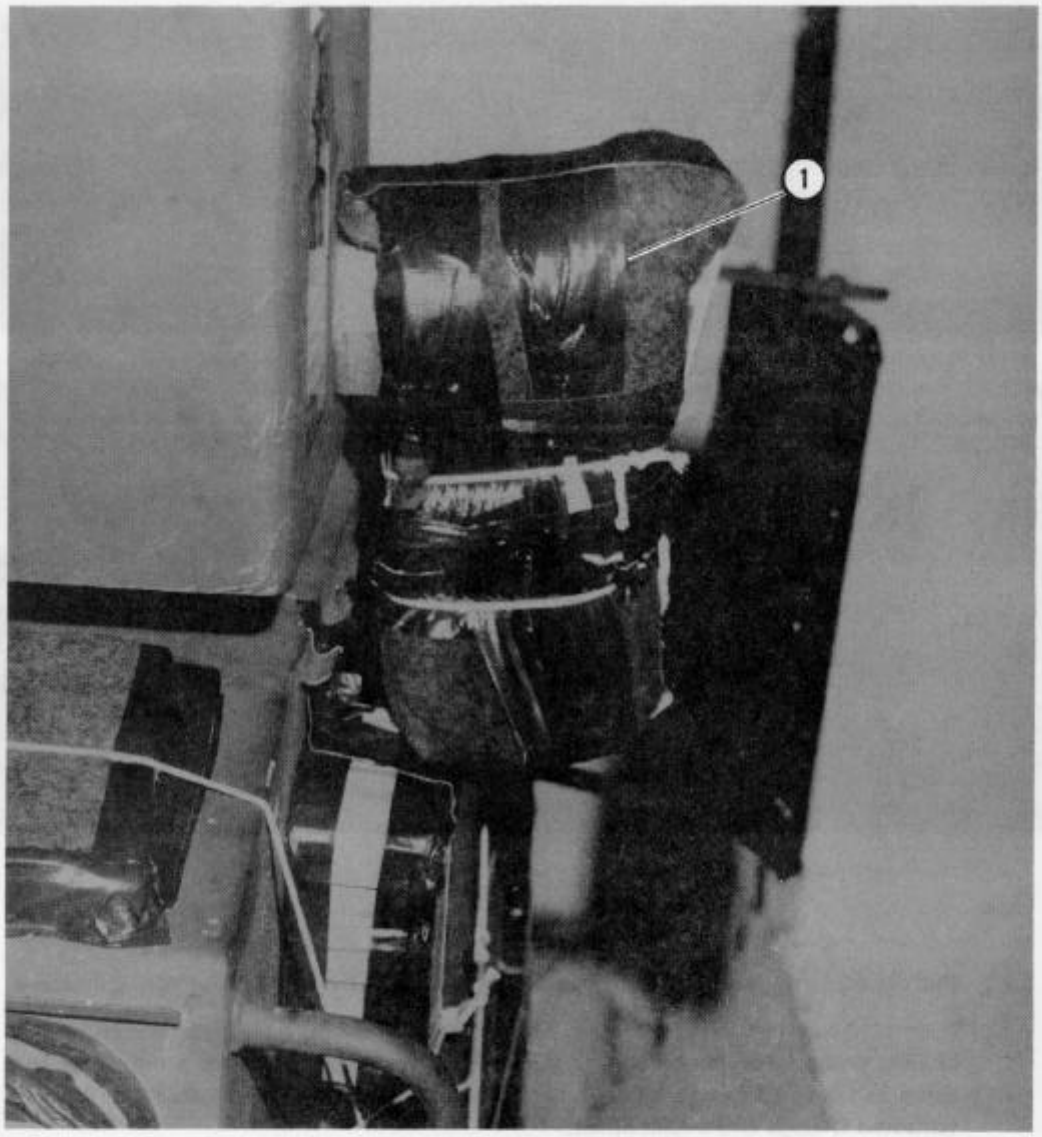

(1) Pad the top of the right counterweight support with felt or cellulose wadding. Secure the felt or cellulose wadding in place with tape and type III nylon cord.

(2) Repeat the procedures in step 1 for the left counterweight support (not shown).

Figure 4-20. Counterweight supports padded

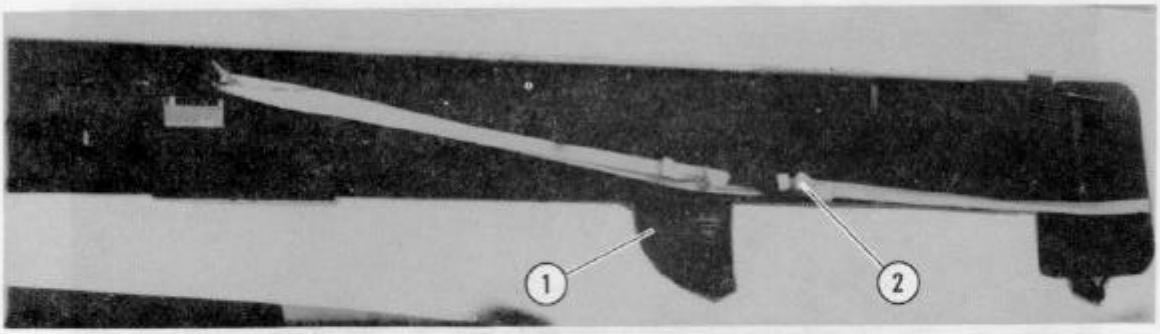

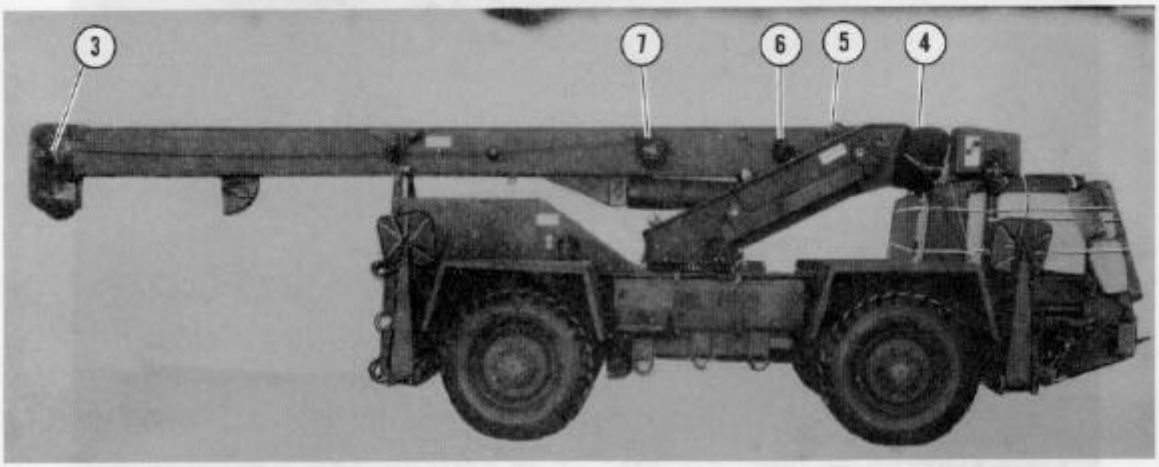

1. Pad the angle finder with cellulose wadding, and tape the cellulose wadding in place.
2. Form a 30-foot lashing according to FM 10-500-2/TO 13C7-1-5. Pass one end of the lashing around the lifting point located 10 feet from the end of the boom. Pass the other end of the lashing around the end of the boom. Secure the ends of the lashing with two D-rings and a load binder.
3. Pad the boom end with cellulose wadding or felt. Tape the cellulose wadding or felt in place.
4. Pad the winch with cellulose wadding, and tape the cellulose wadding in place.
5. Pad the lifting eyes with cellulose wadding, and tape the cellulose wadding in place.
6. Pad the lights with cellulose wadding, and tape the cellulose wadding in place.
7. Pad the tag winder with cellulose wadding, and tape the cellulose wadding in place.

Figure 4-21. Boom prepared

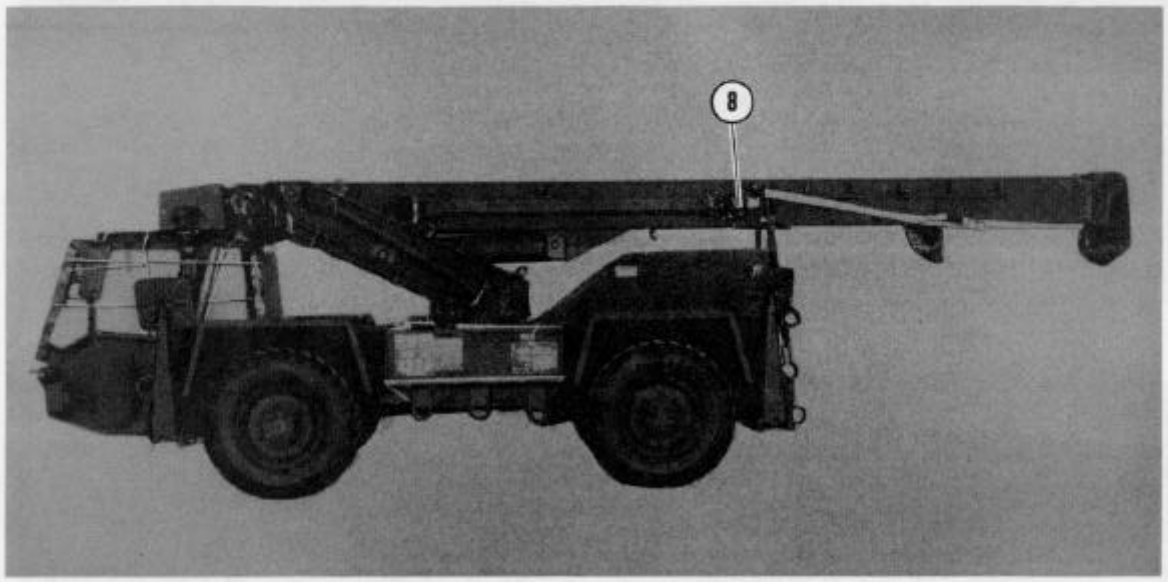

(8) Pad both cylinder extension supports on the left side of the crane with cellulose wadding. Tape the cellulose wadding in place.

(9) Pad sharp or protruding edges of the boom with cellulose wadding, and tape the cellulose wadding in place.

Figure 4-21. Boom prepared (continued)

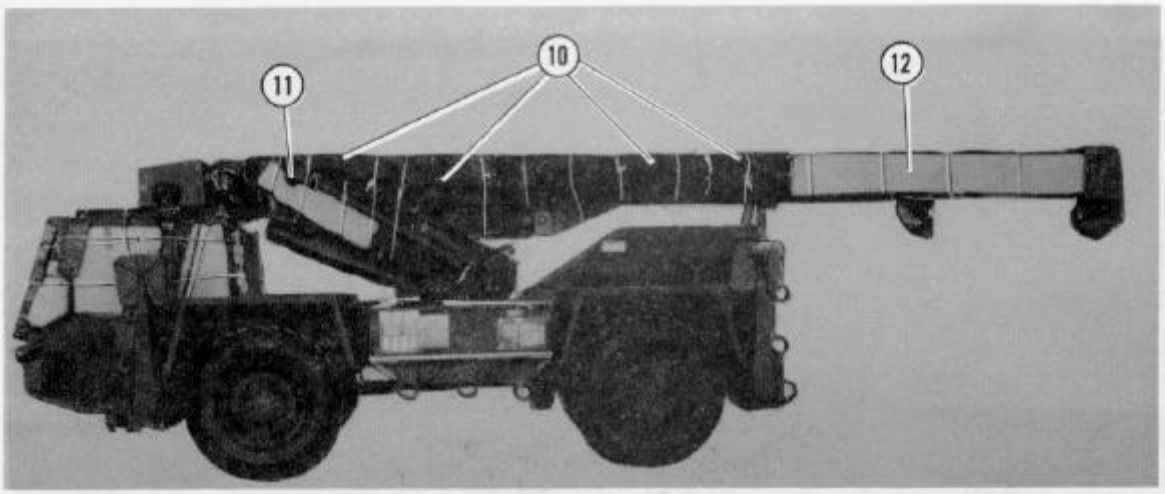

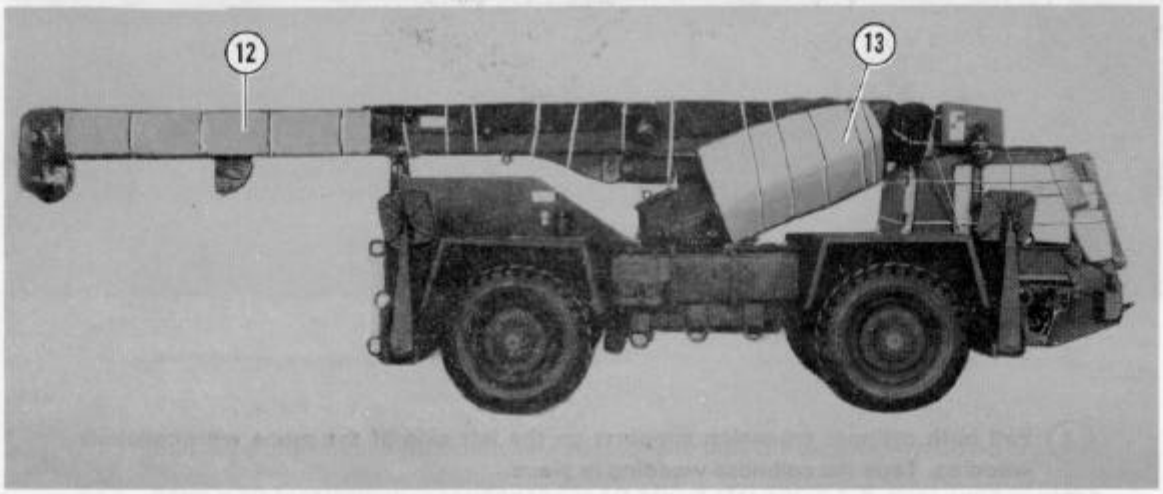

(10) Place five 30- by 36-inch pieces of felt across the top of the boom. Secure the felt in place with type III nylon cord.

(11) Place a 10- by 40-inch piece of honeycomb over the hydraulic lines below the cylinder extension. Secure the honeycomb in place with type III nylon cord.

(12) Place a 14- by 96-inch piece of honeycomb on both sides of the end of the boom. Secure the honeycomb in place with type III nylon cord.

(13) Place a 36- by 55-inch piece of honeycomb over the cylinder on the right side of the crane. Secure the honeycomb in place with type III nylon cord.

Figure 4-21. Boom prepared (continued)

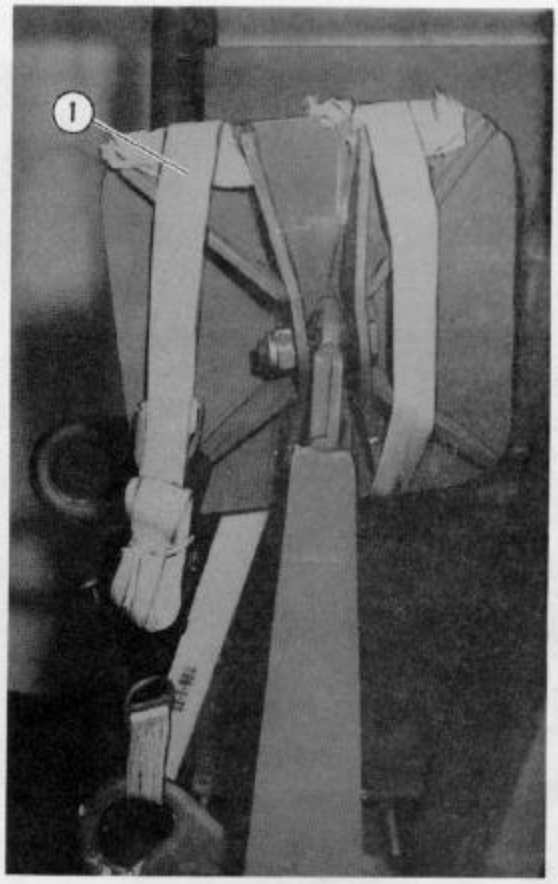

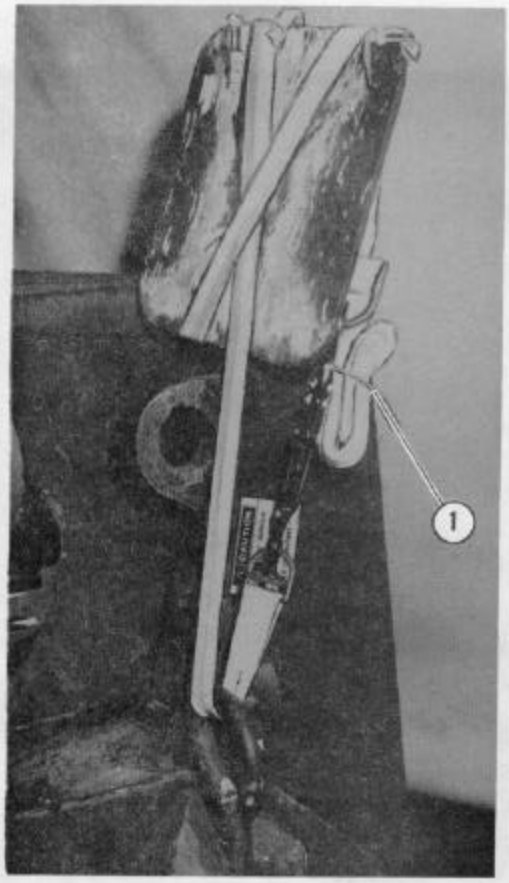

(1) To secure the right rear outrigger, pass a 15-foot lashing through the rear top right tiedown provision, up and over the far side of the outrigger pad, back over the top, and back down forming an X on the pad. Secure the ends of the lashing with a D-ring and a load binder.

(2) Repeat the procedures in step 1 for the left rear outrigger using the rear top left tiedown provision (not shown).

Figure 4-22. Outriggers secured

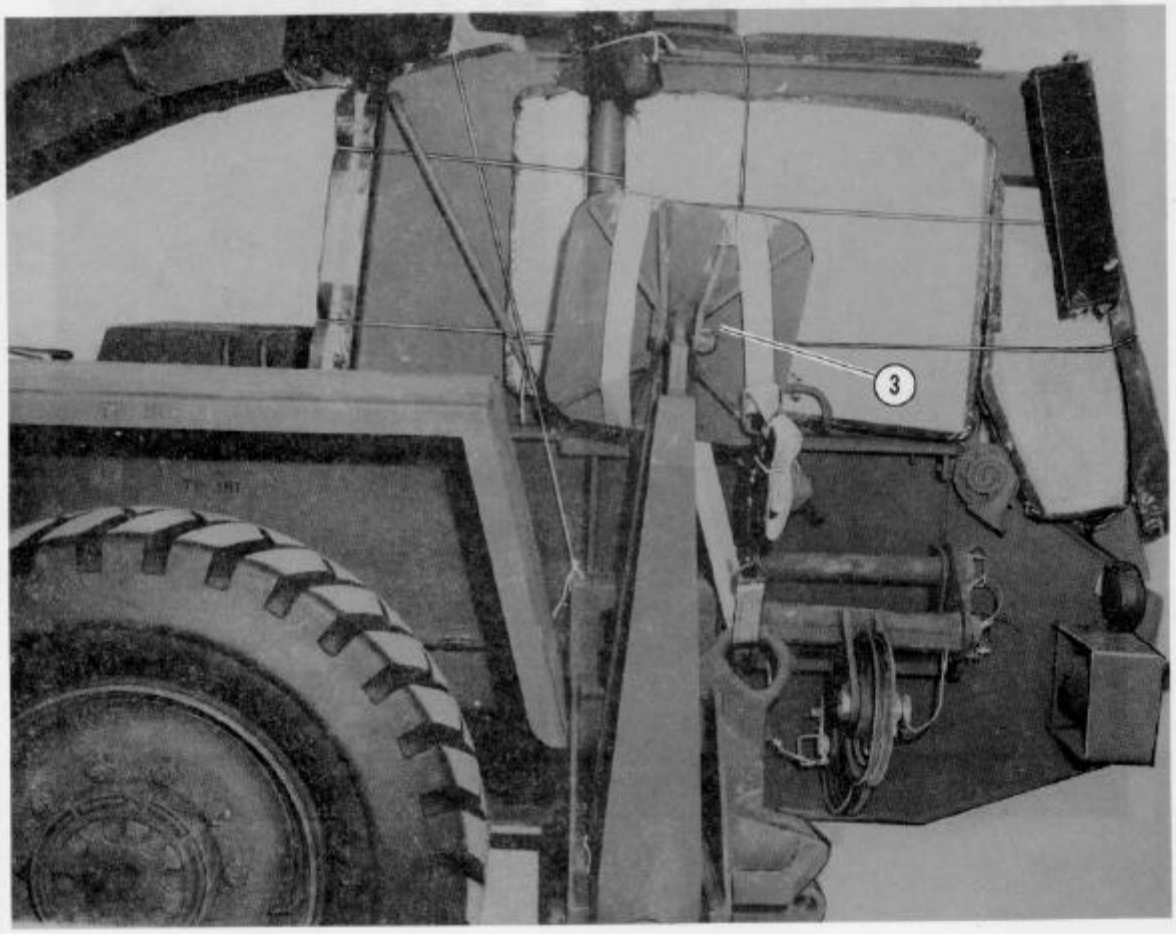

(3) Repeat the procedure in step 1 for the right front outrigger using the front top right tiedown provision.

(4) Repeat the procedure in step 1 for the left front outrigger using the front top left tiedown provision (not shown).

Figure 4-22. Outriggers secured (continued)

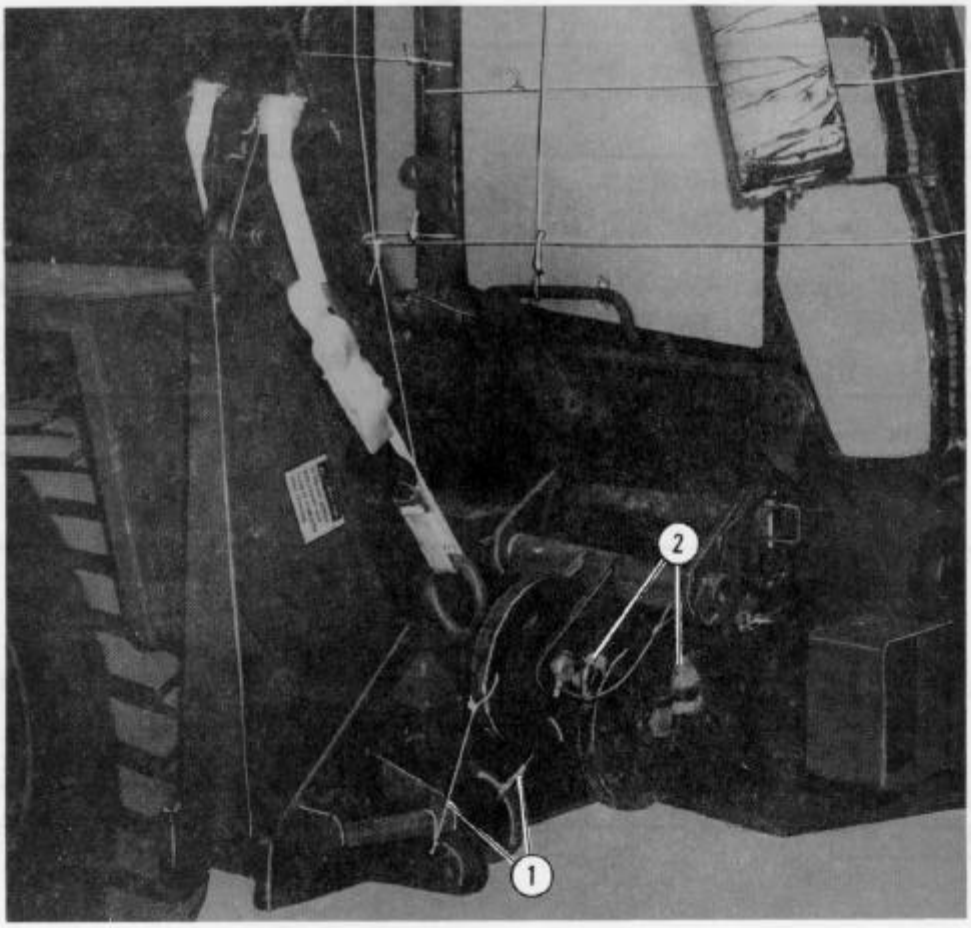

(1) Safety the sheaves on the right side of the cab with type III nylon cord.

(2) Pad any components with metal-to-metal contact using cellulose wadding, and tape the cellulose wadding in place.

Figure 4-23. Sheaves secured

4-5. Building and Positioning Parachute Release Support

Build a parachute release support using eleven 36- by 64 1/2-inch pieces of honeycomb as shown in Figure 4-24. Position the parachute release support as shown in Figure 4-25.

NOTE: These drawings are not drawn to scale.

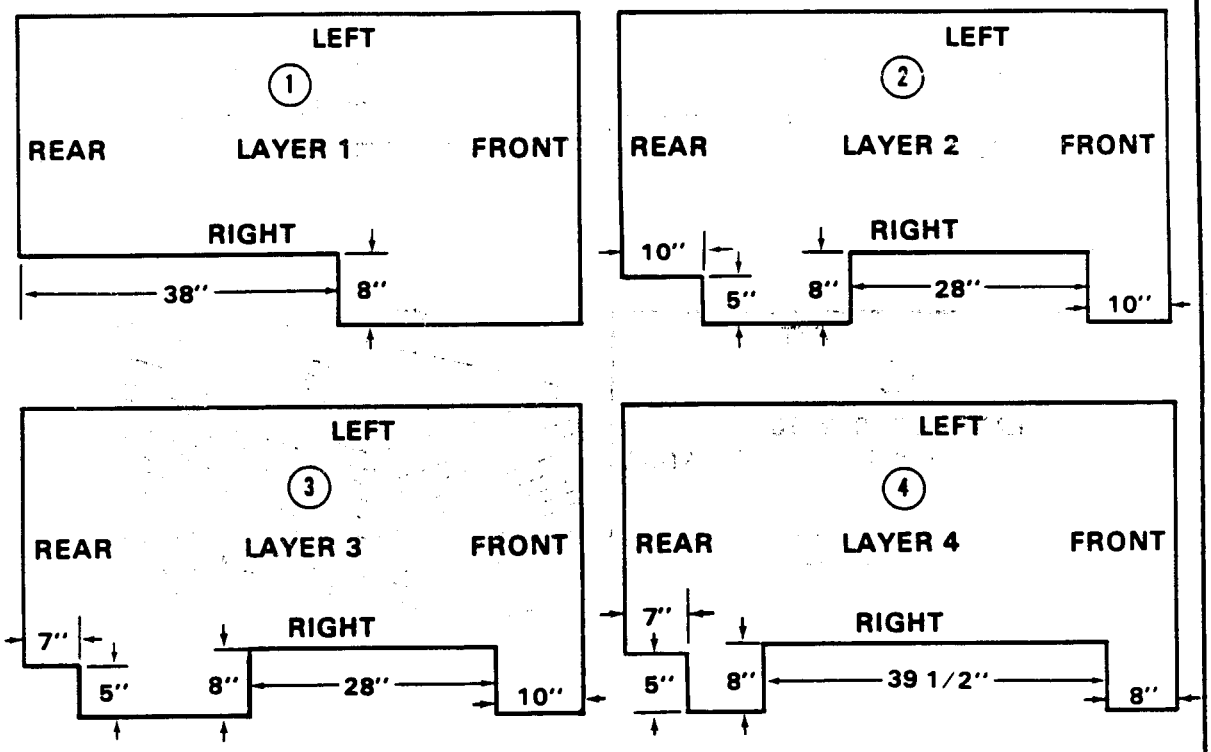

1. Make an 8- by 38-inch cutout in the right rear corner of the first layer.
2. Make an 8- by 28-inch cutout in the right side 10 inches from the front and a 5- by 10-inch cutout in the right rear corner of the second layer.
3. Make an 8- by 28-inch cutout in the right side 10 inches from the front and a 5- by 7-inch cutout in the right rear corner of the third layer.
4. Make an 8- by 39 1/2-inch cutout in the right side 8 inches from the front and a 5- by 7-inch cutout in the right rear corner of the fourth layer.

Figure 4-24. Parachute release support prepared

NOTE: These drawings are not drawn to scale.

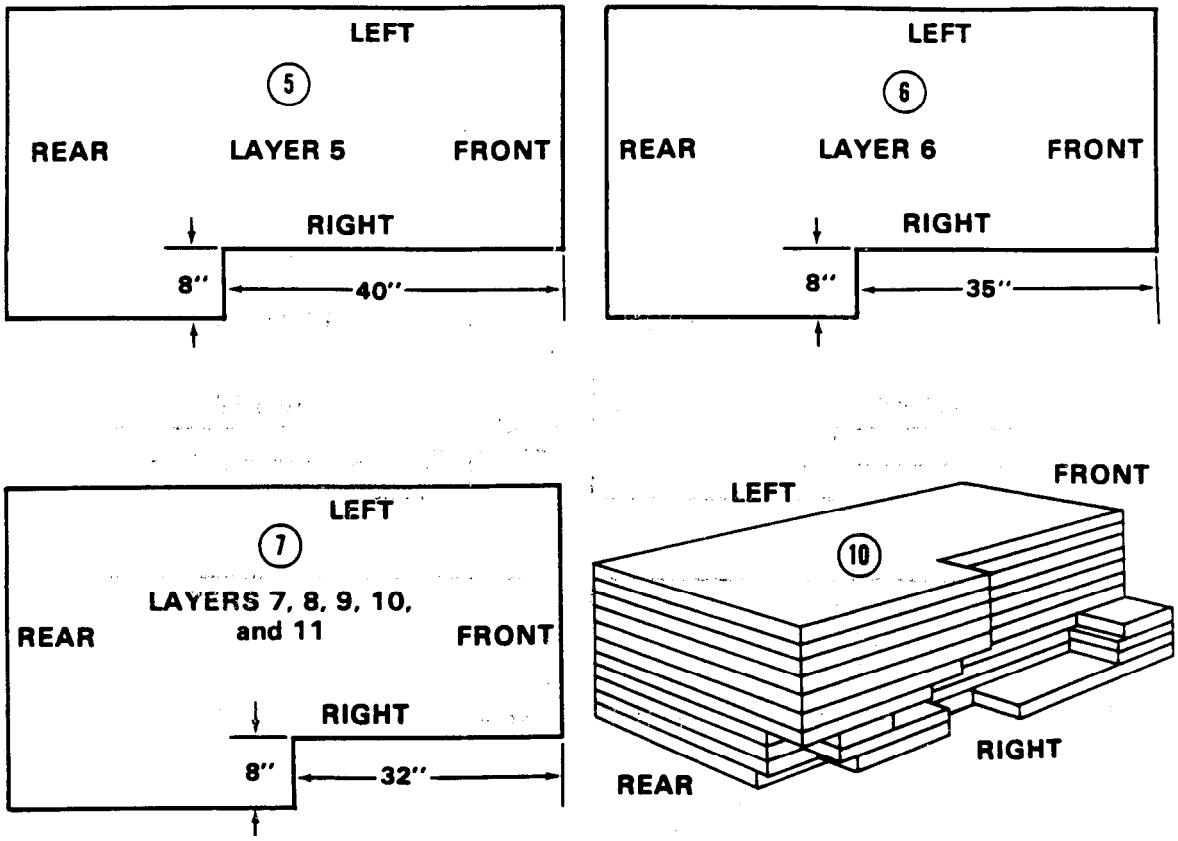

5 Make an 8- by 40-inch cutout in the right front corner of the fifth layer.

6 Make an 8- by 35-inch cutout in the right front corner of the sixth layer.

7 Make an 8- by 32-inch cutout in the right front corner of the seventh layer.

8 Repeat the procedure in step 7 for the eighth, ninth, tenth, and eleventh layers.

9 Tape the top and bottom edges of the stack (not shown).

10 Glue each layer of honeycomb together in numerical order.

Figure 4-24. Parachute release support prepared (continued)

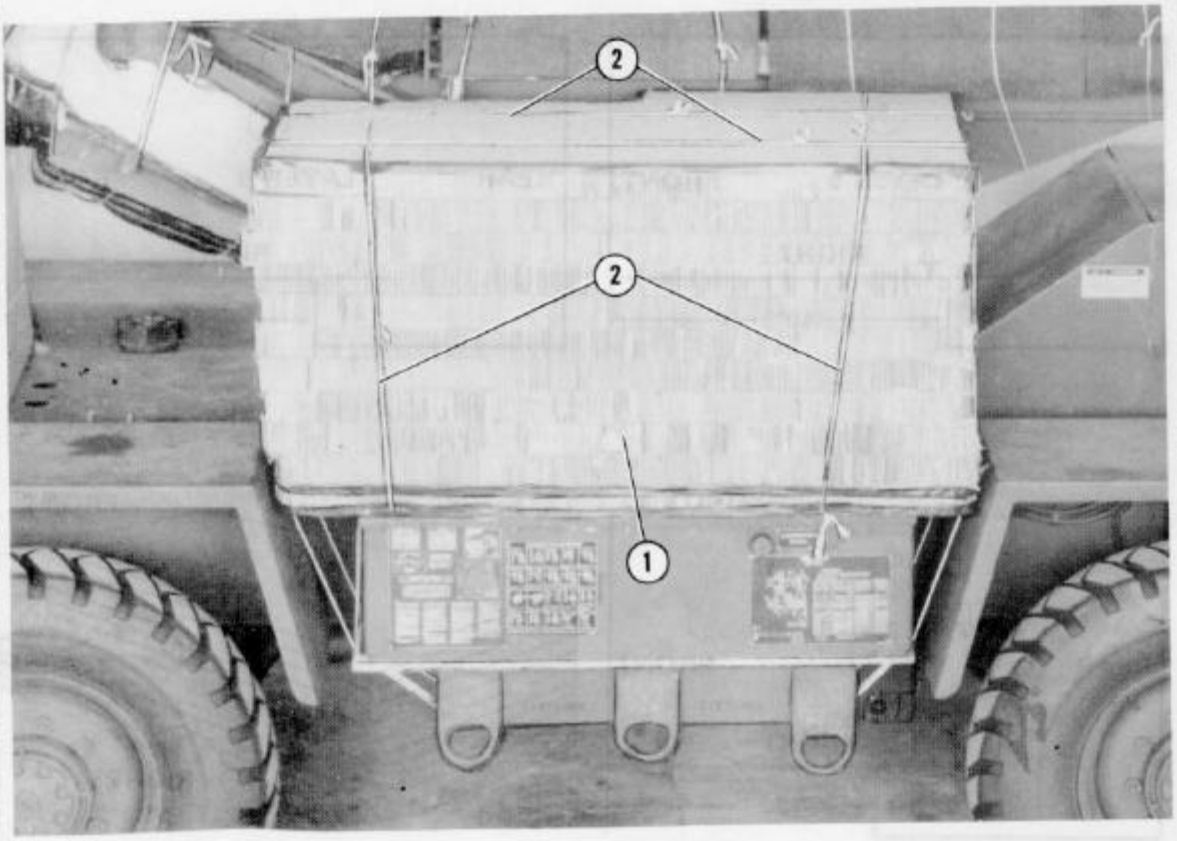

(1) Position the front of the parachute release support to the front of the crane and on top of the toolbox.

(2) Secure the parachute release support with four lengths of type III nylon cord.

Figure 4-25. Parachute release support secured

4-6. Installing Lifting Slings

Install lifting slings as shown in Figure 4-26.

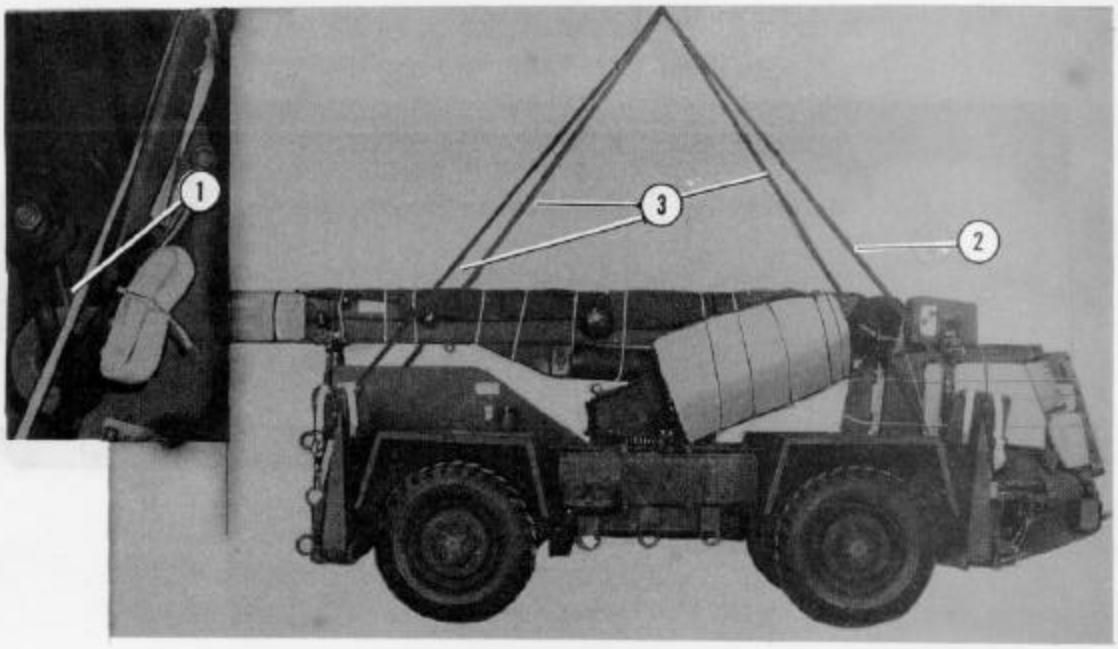

1. Place a large clevis through the right front suspension point on the outrigger.
2. Bolt one end of a 16-foot (4-loop), type XXVI nylon sling to the large clevis.
3. Repeat the procedures in steps 1 and 2 for the other three lifting slings.

Figure 4-26. Lifting slings installed

4-7. Positioning Crane

Position the crane on the honeycomb stacks as shown in Figure 4-27.

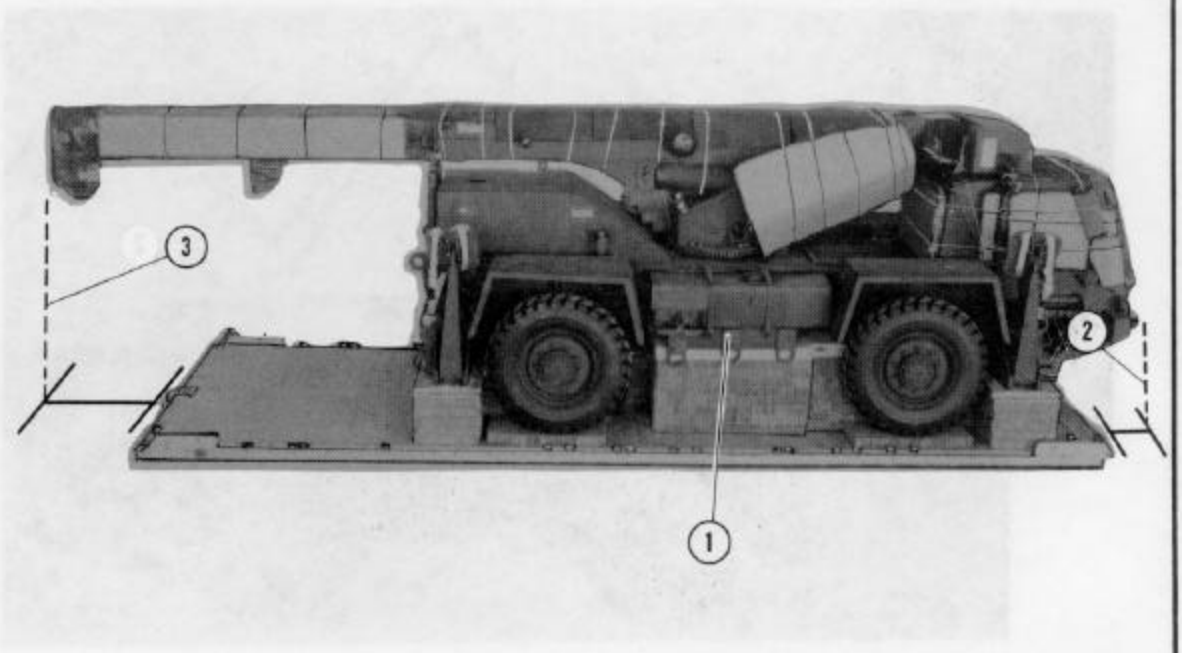

1. Center the crane from side to side on the honeycomb stacks.
2. Position the front of the crane so that there is a 21 3/4-inch overhang from the front edge of the platform.
3. Position the rear of the crane so that the boom has a 36 3/4-inch overhang from the rear edge of the platform.
4. Remove the lifting slings from the crane (not shown).

Figure 4-27. Crane positioned

4-8. Lashing Crane

Lash the crane to the platform using thirty-two 15-foot tiedown assemblies. Install the lashings according to FM 10-500-2/TO 13C7-1-5 and as shown in Figures 4-28 through 4-31.

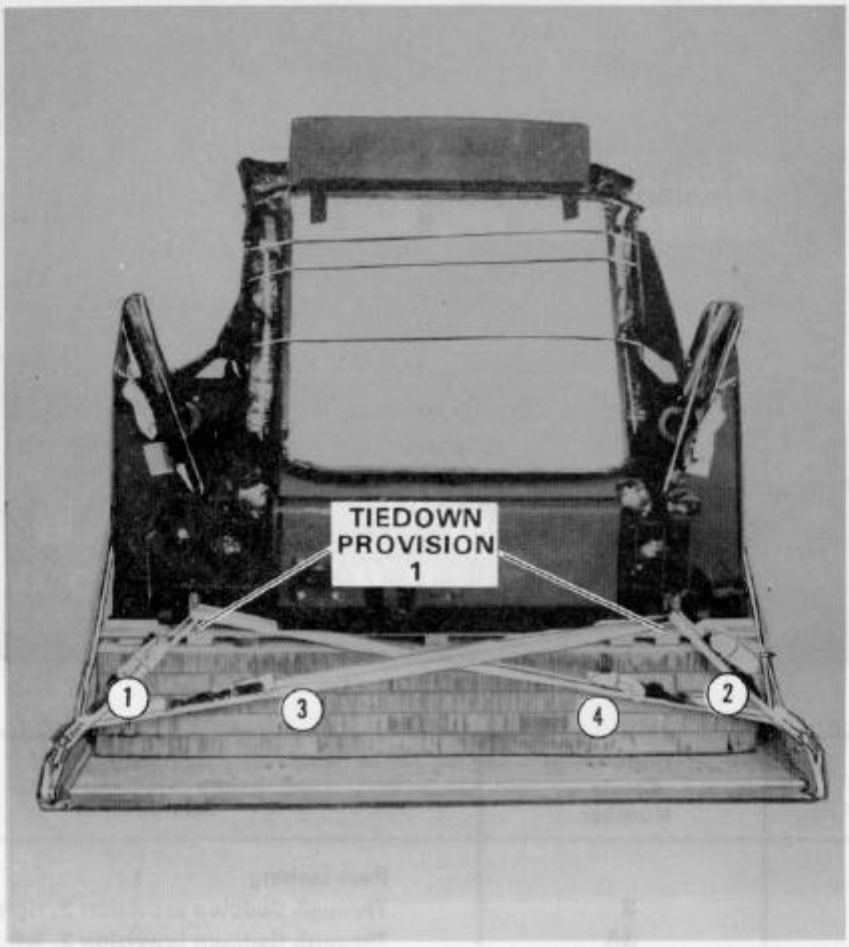

Lashing Number	Tiedown Clevis Number	Instructions
		Pass lashing:
1	1	Through tiedown provision 1, right side.
2	1A	Through tiedown provision 1, left side.
3	2	Through tiedown provision 1, left side.
4	2A	Through tiedown provision 1, right side.

Figure 4-28. Lashings 1 through 4 installed

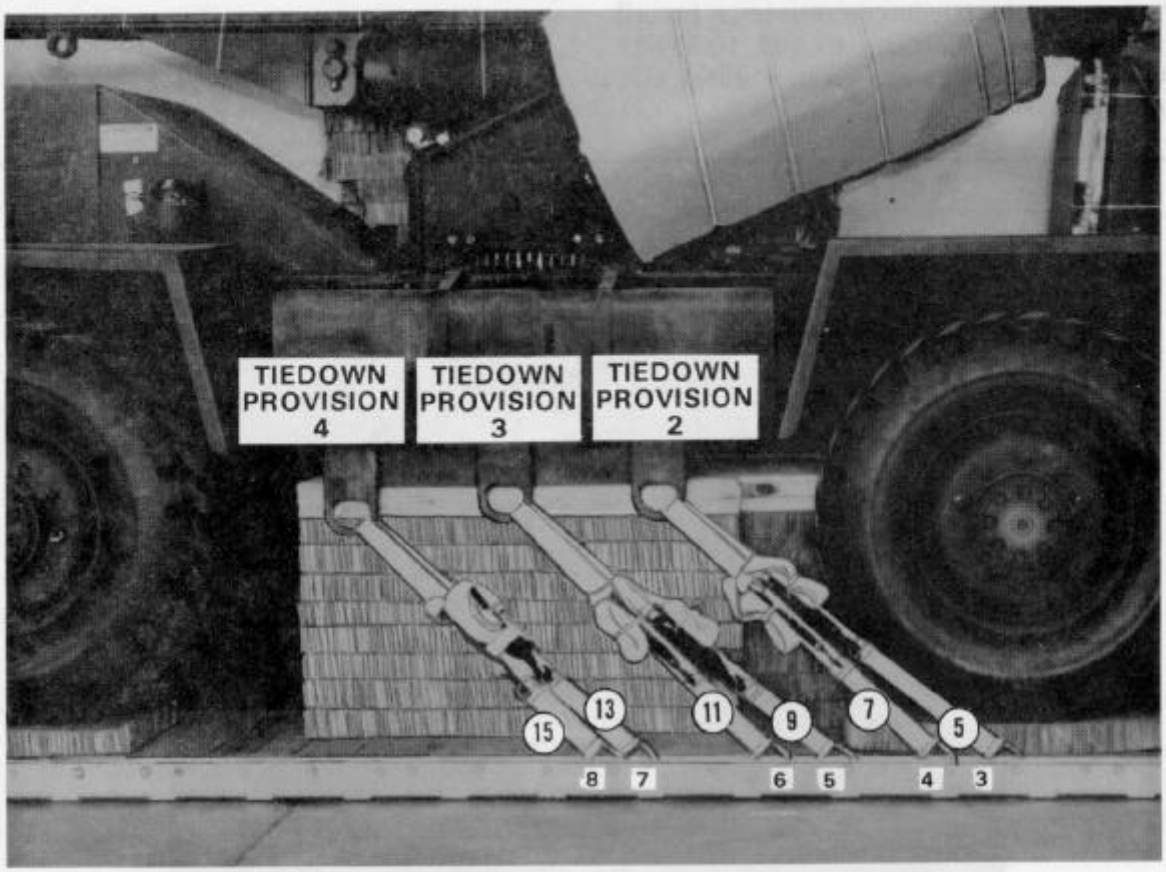

Lashing Number	Tiedown Clevis Number	Instructions
		Pass lashing:
5	3	Through tiedown provision 2, right side.
6	3A	Through tiedown provision 2, left side.
7	4	Through tiedown provision 2, right side.
8	4A	Through tiedown provision 2, left side.
9	5	Through tiedown provision 3, right side.
10	5A	Through tiedown provision 3, left side.
11	6	Through tiedown provision 3, right side.
12	6A	Through tiedown provision 3, left side.
13	7	Through tiedown provision 4, right side.
14	7A	Through tiedown provision 4, left side.
15	8	Through tiedown provision 4, right side.
16	8A	Through tiedown provision 4, left side.

Figure 4-29. Lashings 5 through 16 installed

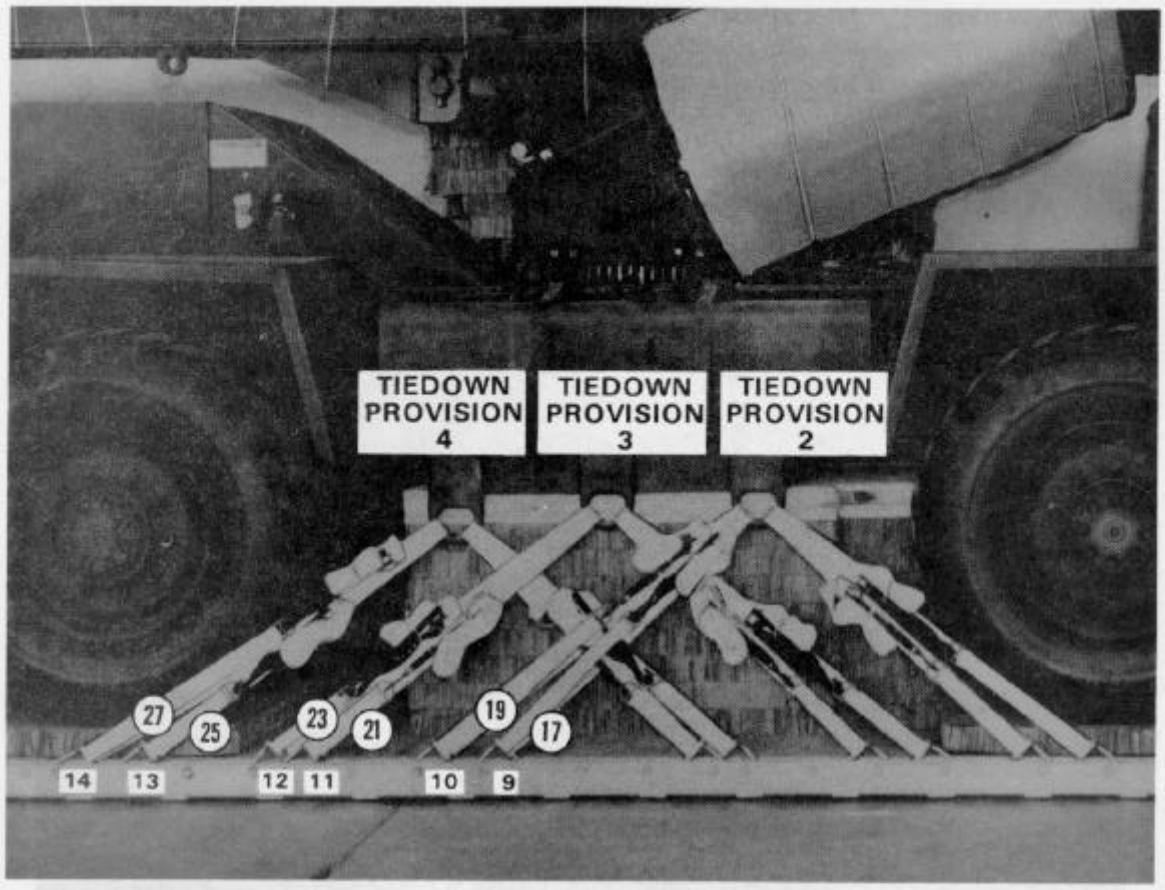

Lashing Number	Tiedown Clevis Number	Instructions
		Pass lashing:
17	9	Through tiedown provision 2, right side.
18	9A	Through tiedown provision 2, left side.
19	10	Through tiedown provision 2, right side.
20	10A	Through tiedown provision 2, left side.
21	11	Through tiedown provision 3, right side.
22	11A	Through tiedown provision 3, left side.
23	12	Through tiedown provision 3, right side.
24	12A	Through tiedown provision 3, left side.
25	13	Through tiedown provision 4, right side.
26	13A	Through tiedown provision 4, left side.
27	14	Through tiedown provision 4, right side.
28	14A	Through tiedown provision 4, left side.

Figure 4-30. Lashings 17 through 28 installed

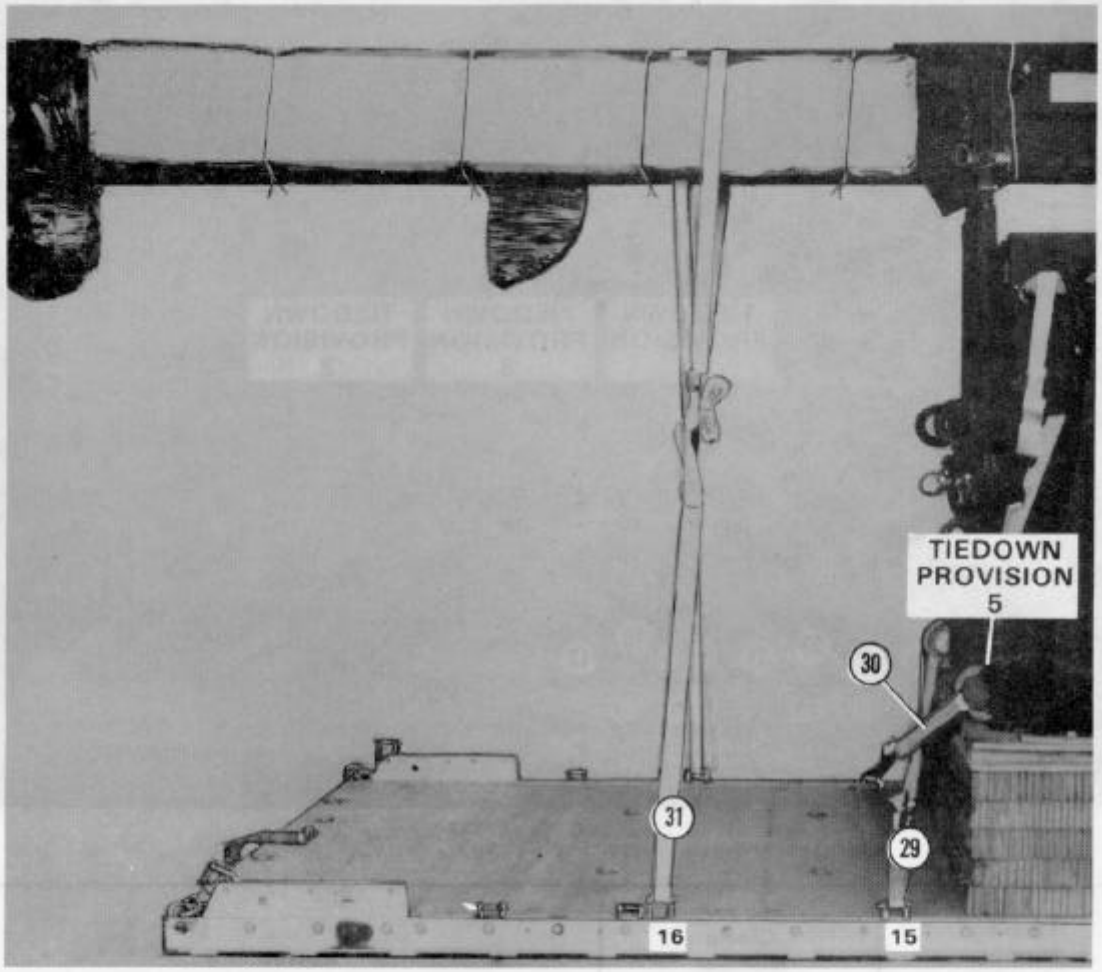

Lashing Number	Tiedown Clevis Number	Instructions
		Pass lashing:
29	15	Through tiedown provision 5, left side.
30	15A	Through tiedown provision 5, right side.
31	16	Up and between the left side of the boom and honeycomb and over the top of the boom to clevis 16.
32	16A	Up and between the right side of the boom and honeycomb and over the top of the boom to clevis 16A.

Figure 4-31. Lashings 29 through 32 installed

4-9. Building and Positioning Parachute Stowage Platform

Build a honeycomb stack as shown in Figure 4-32 to support the parachute stowage platform. Build a parachute stowage platform as shown in Figure 4-33. Position the honeycomb stack and parachute stowage platform as shown in Figure 4-34. Lash the parachute stowage platform as shown in Figure 4-35.

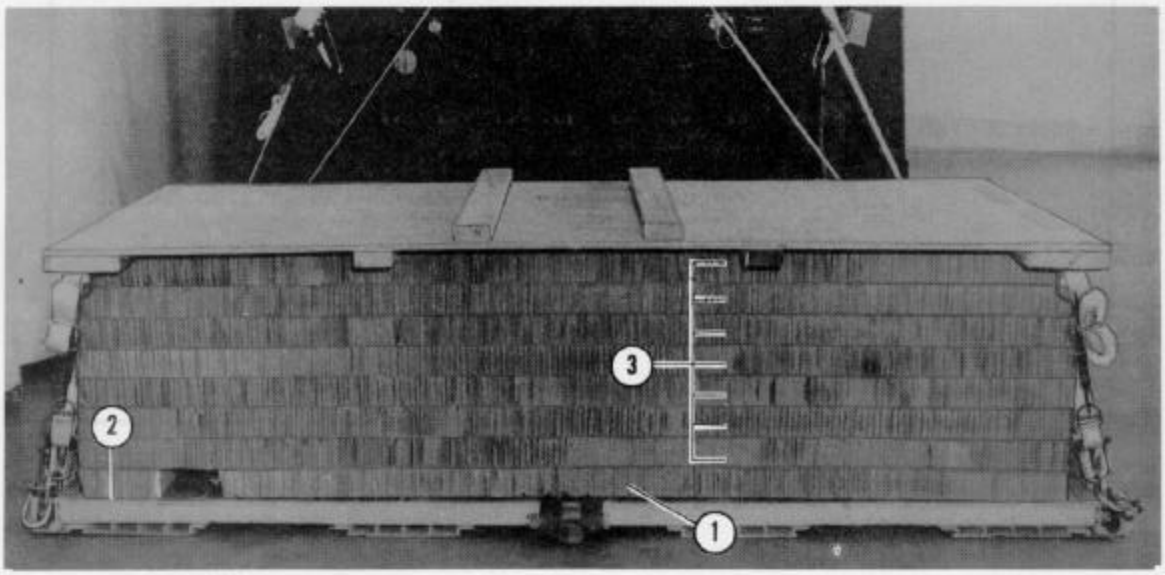

(1) Place a 36- by 80-inch piece of honeycomb on the floor.

(2) Place an 8- by 36-inch piece of honeycomb 8 inches to the left of the 36-by 80-inch piece of honeycomb to form the base layer.

(3) Glue seven 36- by 96-inch pieces of honeycomb on top of the base layer.

Figure 4-32. Honeycomb stack built

NOTE: This drawing is not drawn to scale.

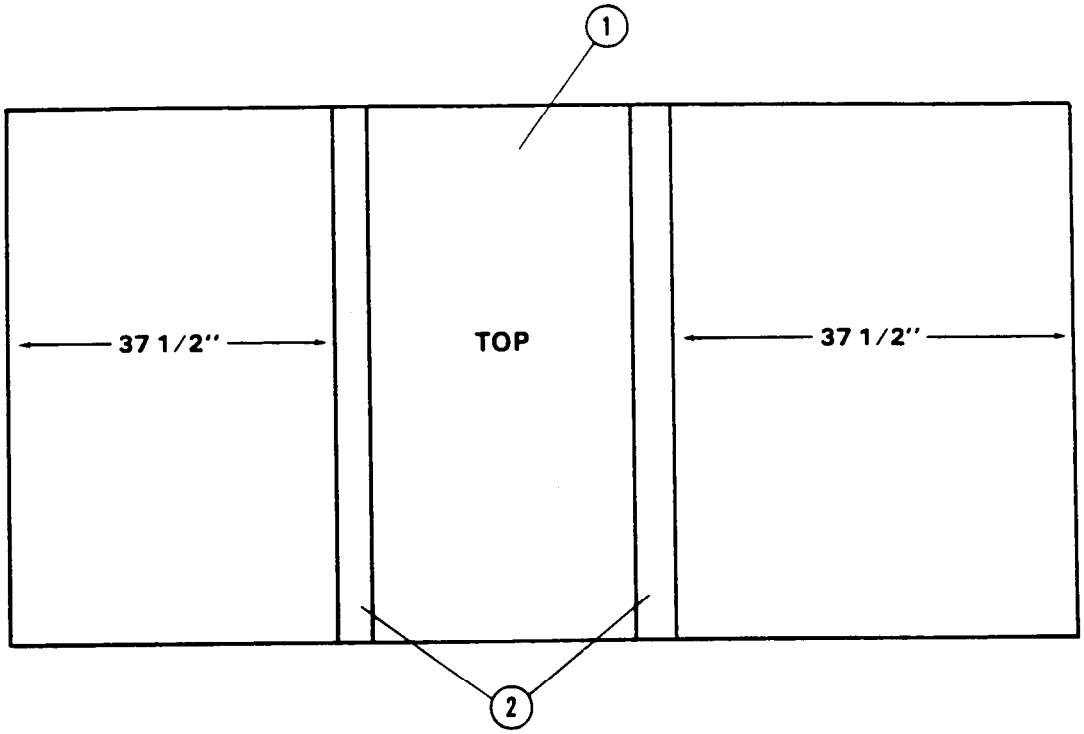

1. Use a 3/4- by 48- by 96-inch piece of plywood for the parachute stowage platform.
2. Cut two 2- by 4- by 48-inch pieces of lumber. Place each piece 37 1/2 inches from each end of the plywood.

Figure 4-33. Parachute stowage platform built

NOTE: This drawing is not drawn to scale.

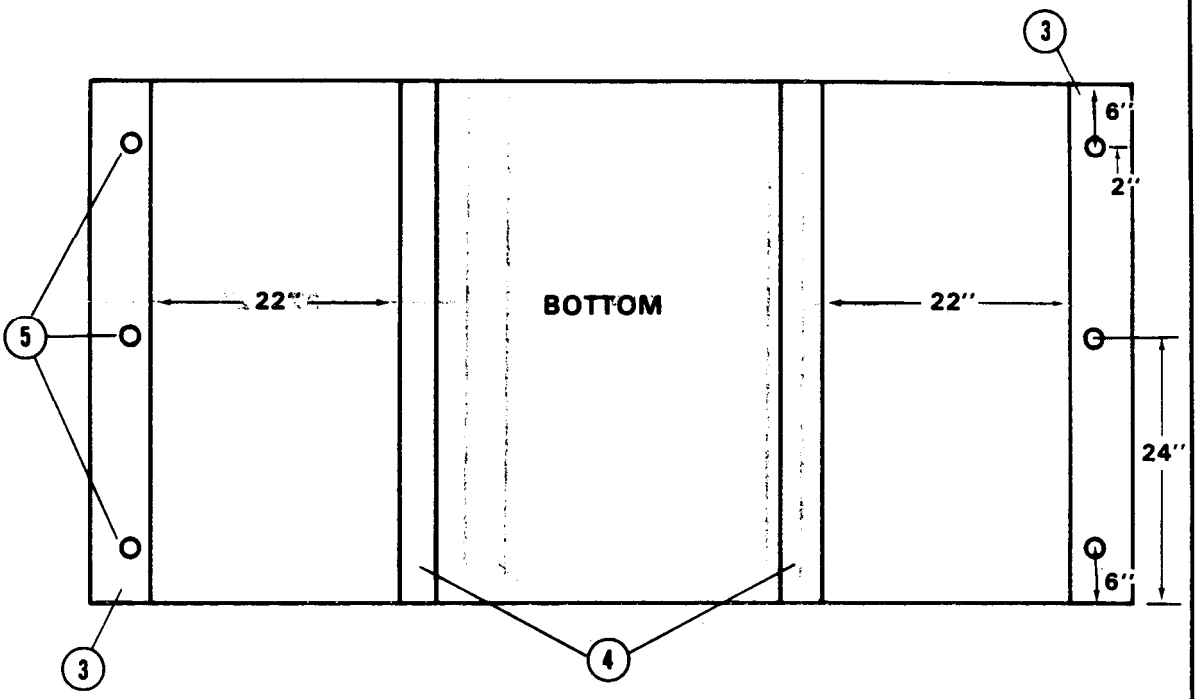

(3) Cut two 2- by 6- by 48-inch pieces of lumber. Place one piece flush at each end on the bottom of the plywood.

(4) Cut two 2- by 4- by 48-inch pieces of lumber. Place one piece 22 inches from the 2- by 6- by 48-inch lumber.

(5) Drill three 2-inch holes on each 2- by 6- by 48-inch piece of lumber as shown.

Figure 4-33. Parachute stowage platform built (continued)

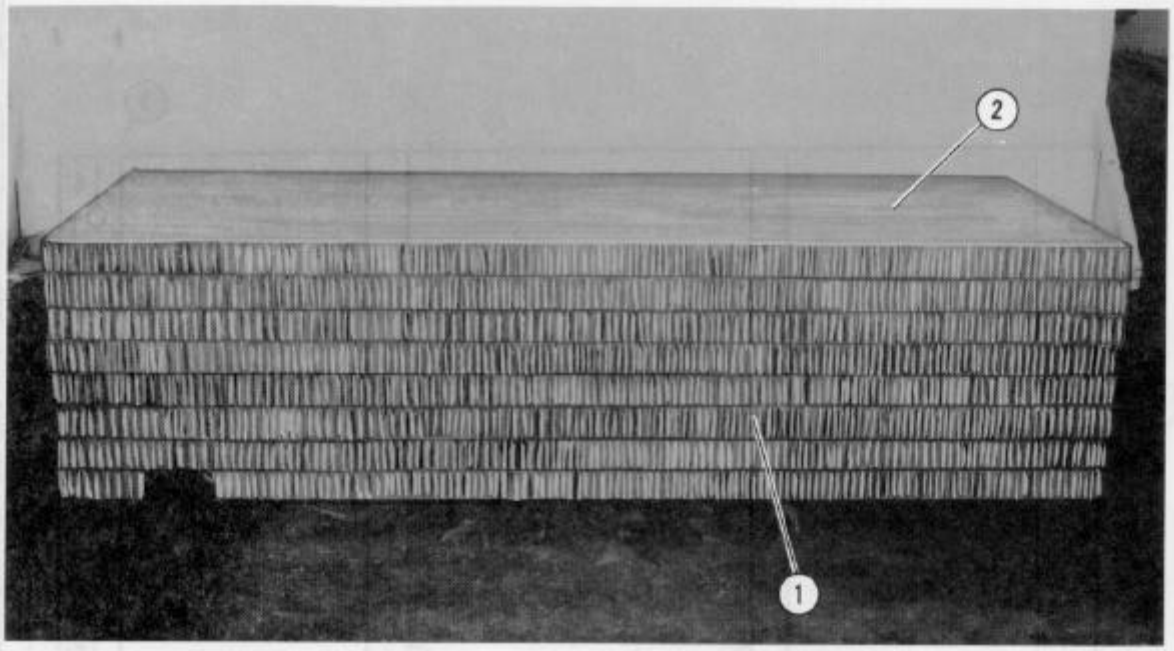

(1) Position the honeycomb stack flush with the rear edge of the platform with the 8- by 36-inch piece of honeycomb on the left side of the platform.

(2) Center the parachute stowage platform on top of the honeycomb stack with an 8-inch overhang on the rear of the platform.

Figure 4-34. Honeycomb stack and parachute stowage platform positioned

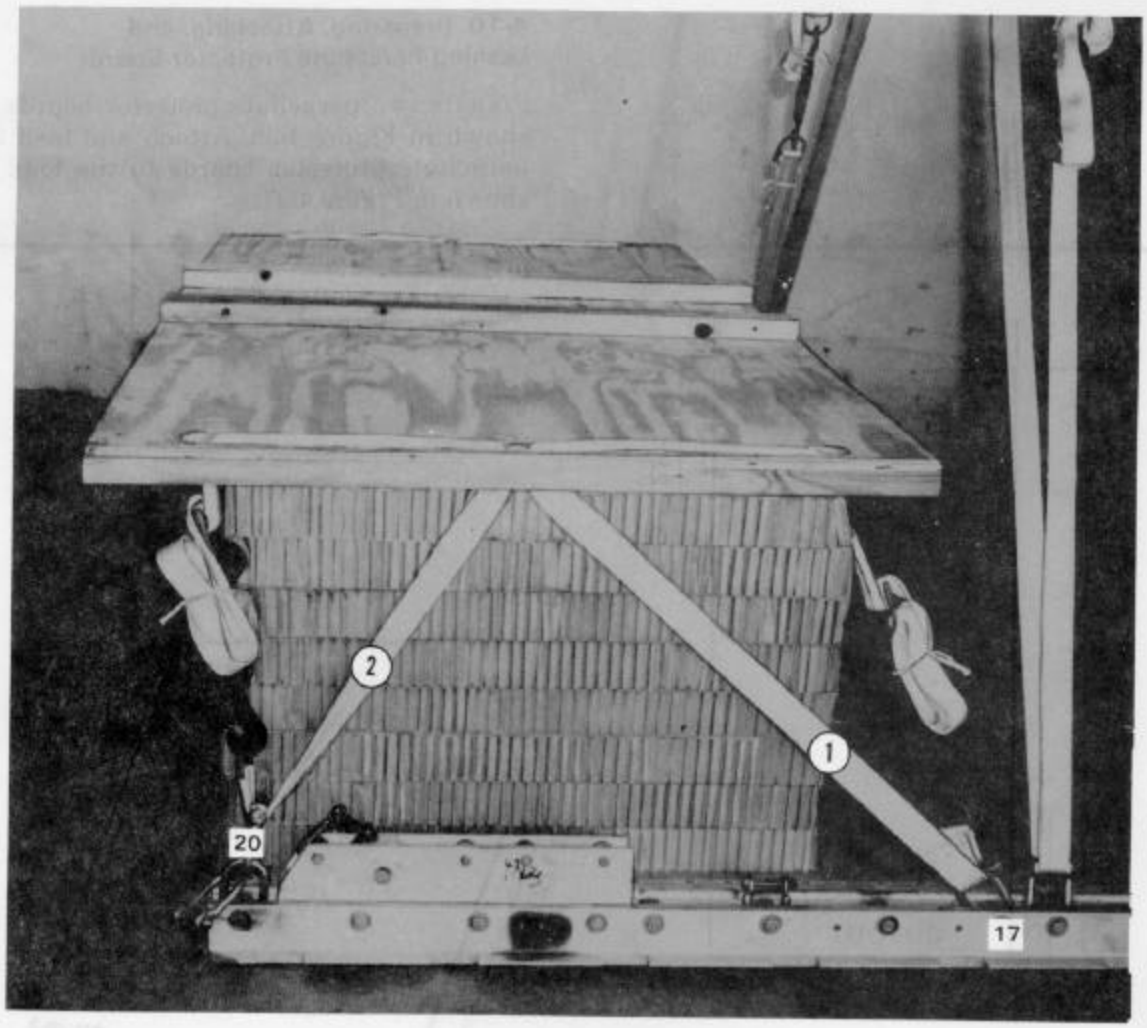

(1) Run a 15-foot lashing through tiedown clevis 17, up through the center hole of the parachute stowage platform, over the top and through the front hole of the platform, and back to tiedown clevis 17. Secure the ends with a D-ring and a load binder.

(2) Run a 15-foot lashing through tiedown clevis 20, up through the center hole of the parachute stowage platform, over the top and through the rear hole of the platform, and back to tiedown clevis 20. Secure the ends with a D-ring and a load binder.

(3) Repeat the procedures in steps 1 and 2 for the left side of the parachute stowage platform using tiedown clevises 17A and 20A.

Figure 4-35. Parachute stowage platform lashed

4-10. Preparing, Attaching, and Lashing Parachute Protector Boards

Prepare two parachute protector boards as shown in Figure 4-36. Attach and lash the parachute protector boards to the load as shown in Figure 4-37.

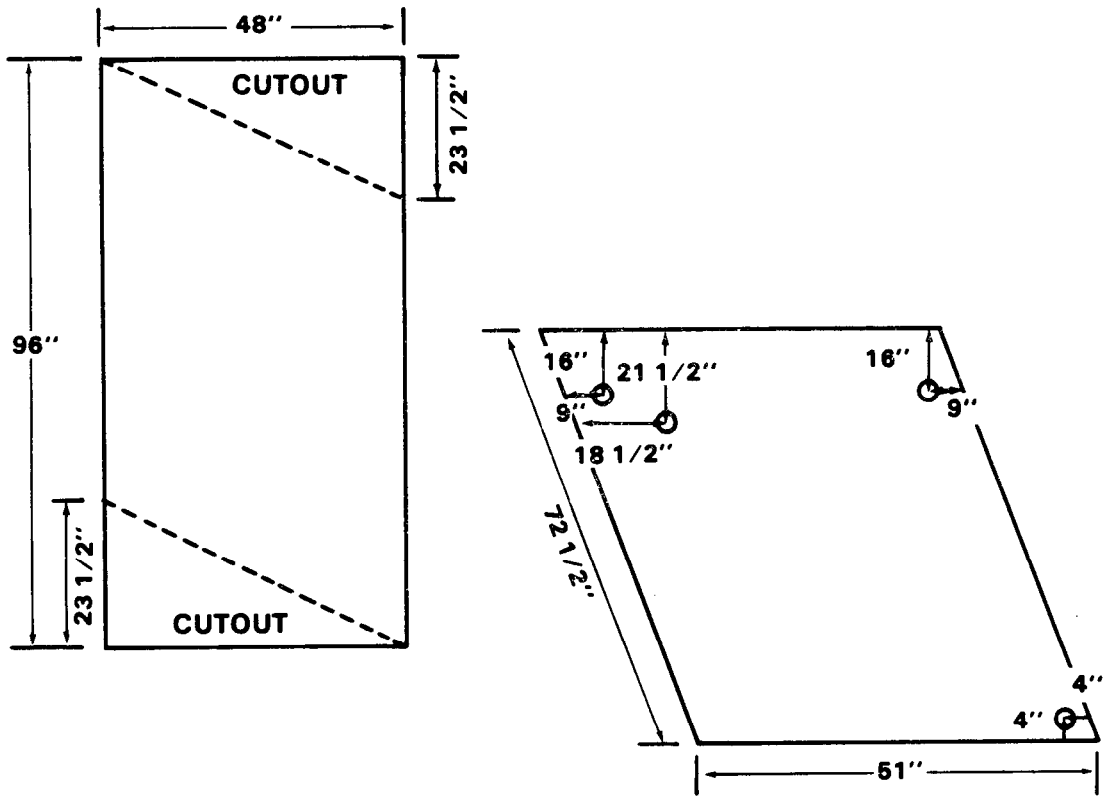

NOTE: These drawings are not drawn to scale.

STEP:

1. Cut two 1/2- by 48- by 96-inch pieces of plywood as shown.
2. Drill four 2-inch holes through each piece of plywood as shown.

Figure 4-36. Parachute protector boards prepared

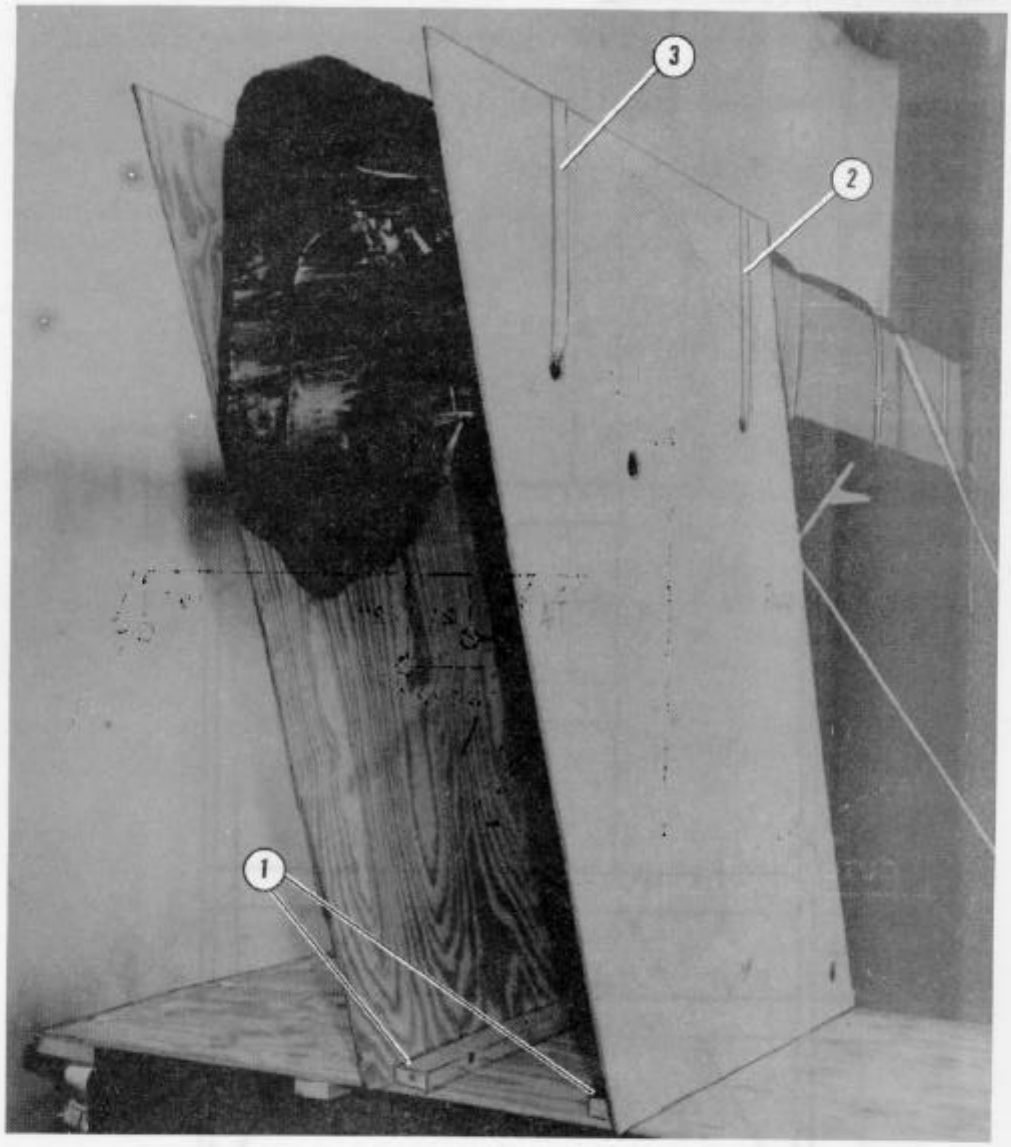

(1) Attach the parachute protector boards to the 2- by 4- by 48-inch pieces of lumber on the parachute stowage platform using sixpenny nails.

(2) Starting between the two boards under the boom, run the free end of a 15-foot lashing through the top right front hole, up and over the top of the boom, and back through the top left front hole. Secure the ends with a D-ring and a load binder.

(3) Repeat the procedures in step 2 using the top rear holes.

Figure 4-37. Parachute protector boards attached and lashed

NOTE: This drawing is not drawn to scale.

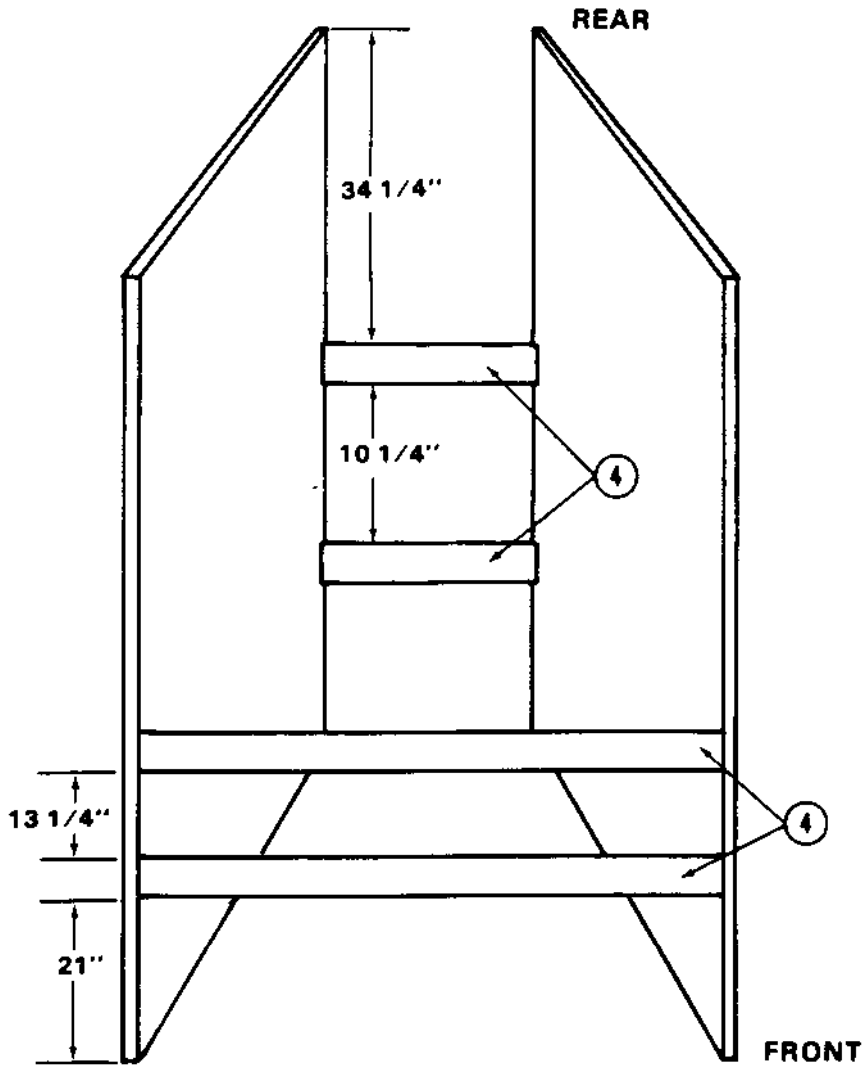

(4) Attach four 2- by 4- by 20 3/4-inch pieces of lumber to the parachute protector boards as shown.

Figure 4-37. Parachute protector boards attached and lashed (continued)

4-12. Installing Suspension Slings, Antitumble Slings, and Deadman's Tie

Install the suspension slings as shown in Figure 4-39. Install the antitumble slings and deadman's tie as shown in Figure 4-40.

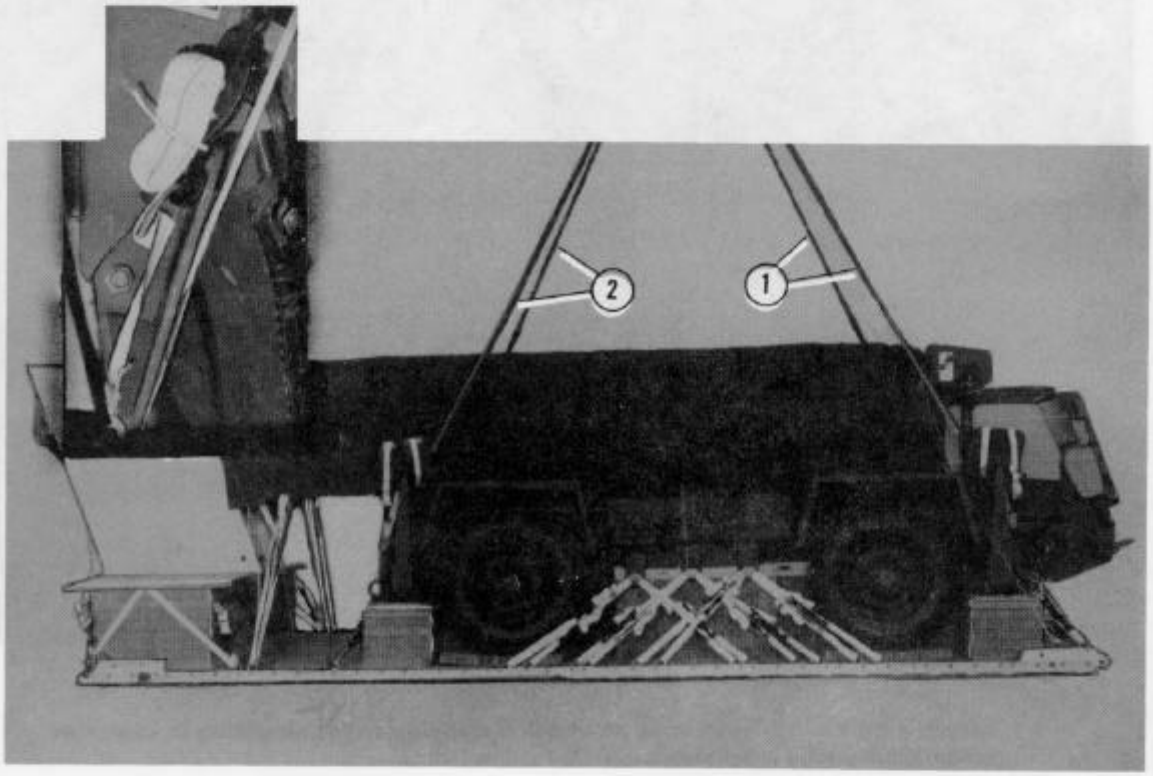

(1) **Attach a 16-foot (4-loop), type XXVI nylon suspension sling to the suspension point on each front outrigger with a large clevis.**

(2) **Attach a 12-foot (4-loop), type XXVI nylon suspension sling to the suspension point on each rear outrigger with a large clevis.**

Figure 4-39. Suspension slings installed

4-11. Placing Load Cover

Place the load cover as shown in Figure 4-38.

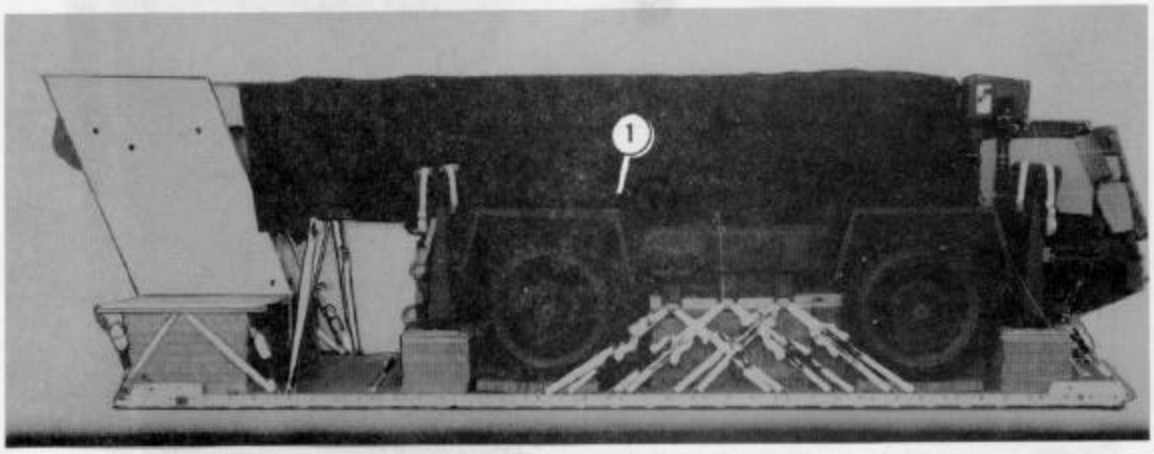

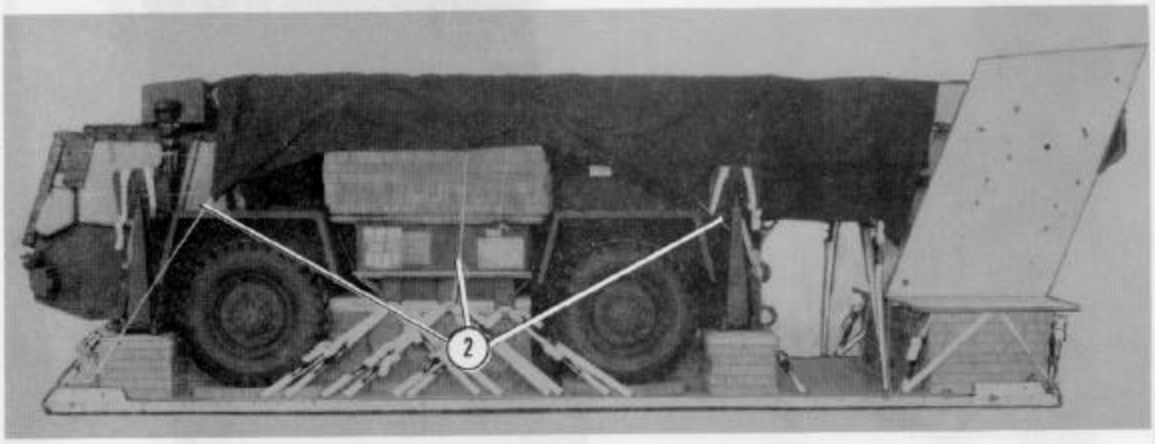

(1) Place a 10- by 19-foot canvas cover over the load.

(2) Secure the cover to convenient points on the load with type III nylon cord.

Figure 4-38. Load cover placed on the load

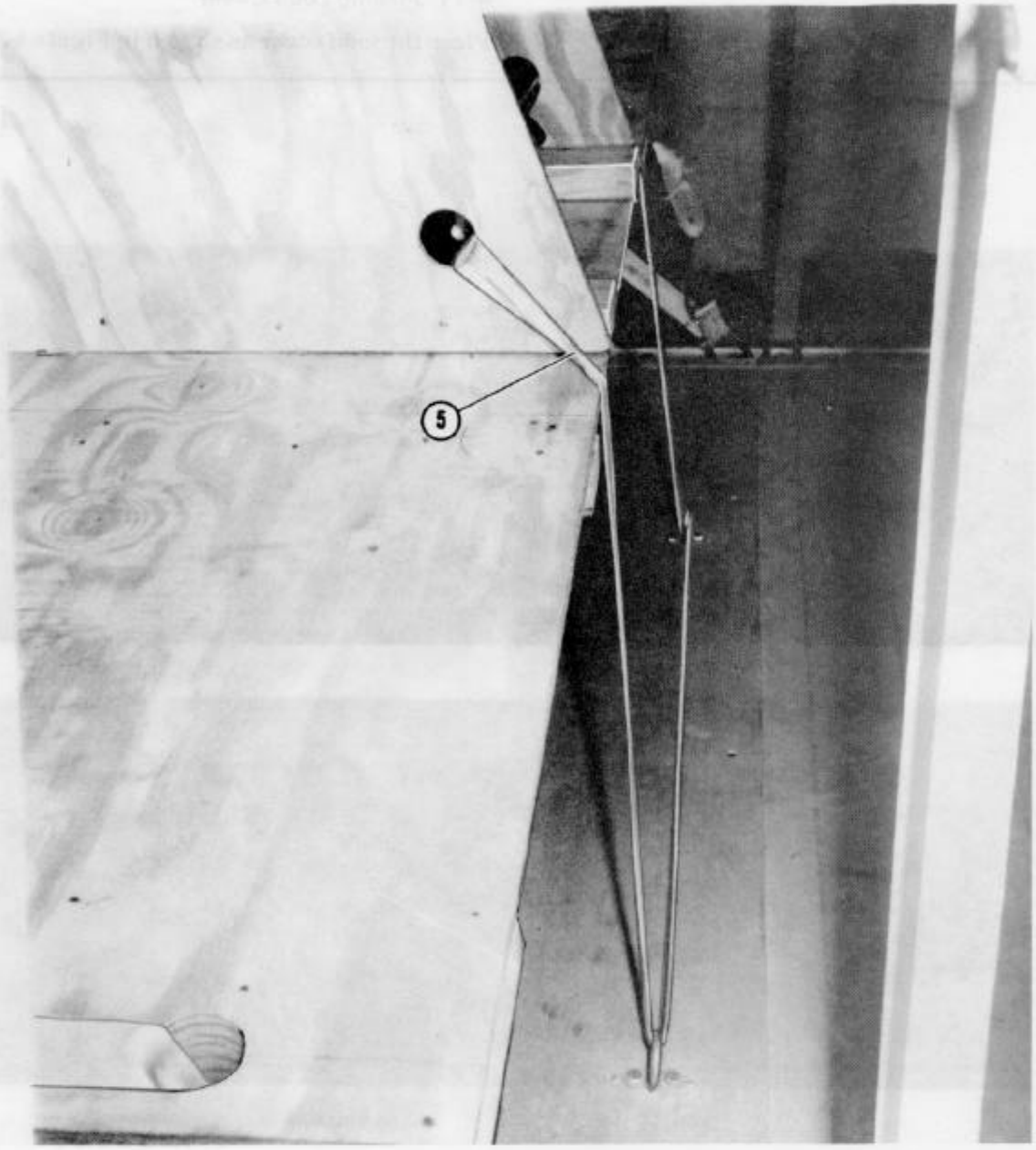

(5) **Starting at the bottom front end between the parachute protector boards, run the free end of a 15-foot lashing through the left board, down to tiedown ring B11, through tiedown ring A11, and up through the hole on the right board. Secure the ends with a D-ring and a load binder.**

Figure 4-37. Parachute protector boards attached and lashed (continued)

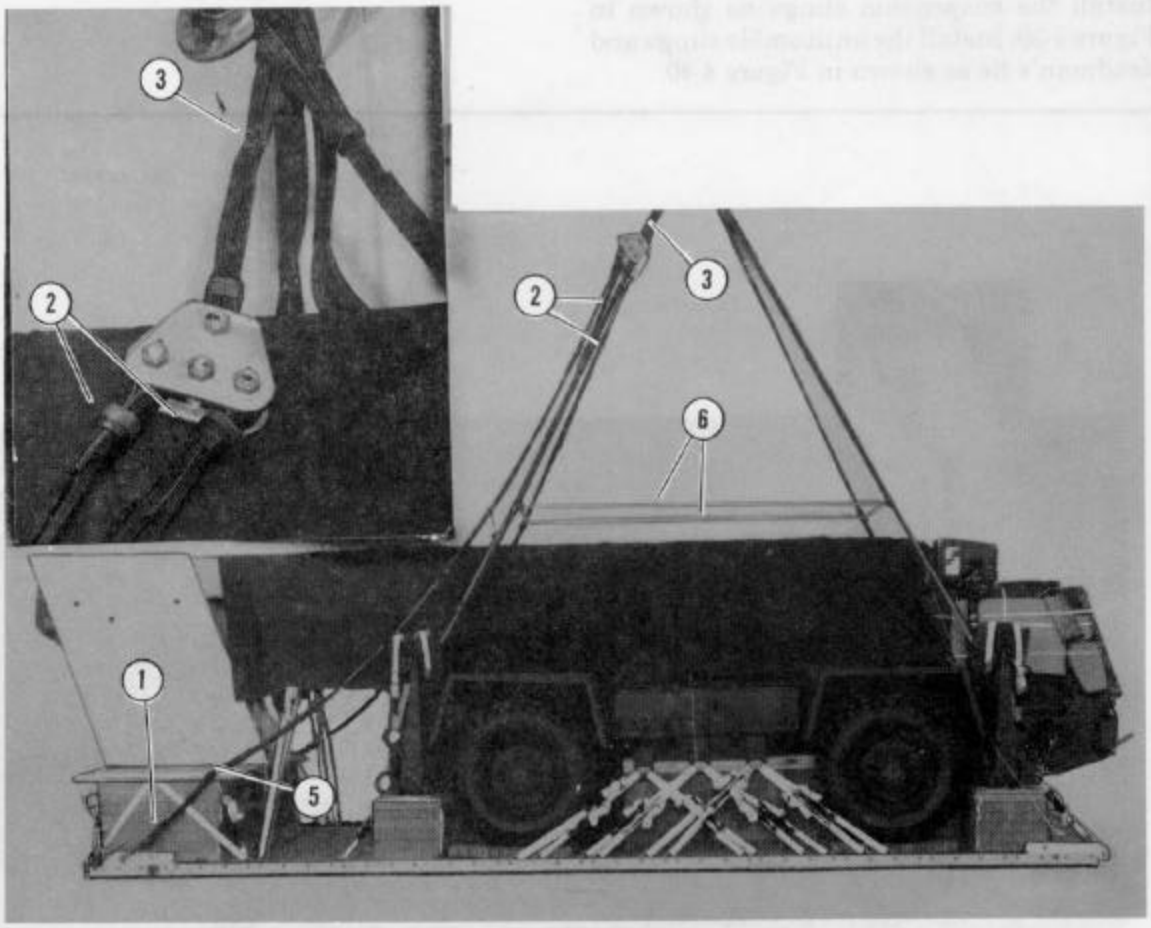

1. Attach a 20-foot (2-loop), type XXVI nylon webbing antitumble sling to each rear tandem link with a large clevis.
2. Attach the free end of the right rear suspension sling and the right antitumble sling to the outside pins of the four-point link assembly.
3. Attach a 3-foot (4-loop), type XXVI nylon webbing sling to the top pin of the four-point link assembly.
4. Repeat the procedures in steps 2 and 3 for the left side.
5. Safety the antitumble slings to the first hole of the parachute stowage platform with type I, 1/4-inch cotton webbing.
6. Safety the suspension slings with a deadman's tie according to FM 10-500-2/TO 13C7-1-5.

Figure 4-40. Antitumble slings and deadman's tie installed

4-13. Stowing Cargo Parachutes

Build a parachute filler as shown in Figure 4-41. Prepare and stow seven G-11A cargo parachutes according to FM 10-500-2/TO 13C7-1-5 and as shown in Figures 4-42, 4-43, and 4-44.

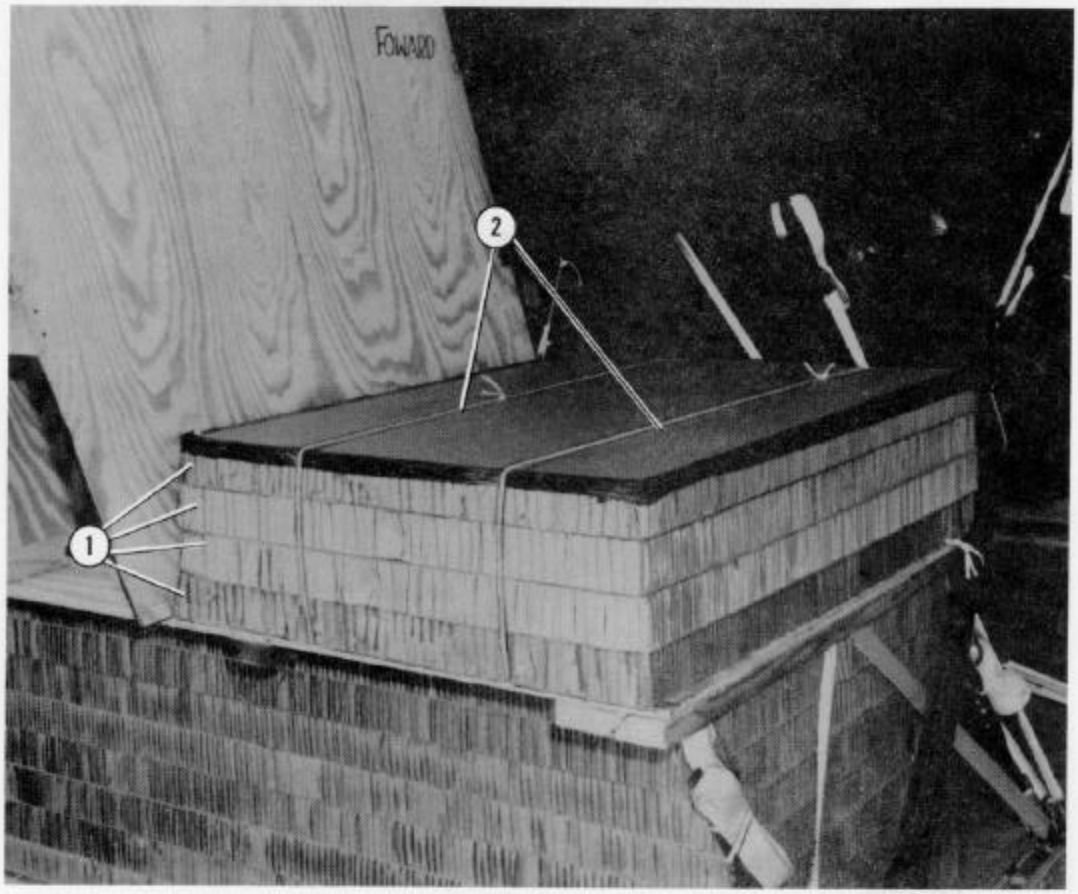

(1) Place four 36- by 48-inch pieces of honeycomb on the right side of the parachute stowage platform. Tape the edges of the top layer of honeycomb.

(2) Run two lengths of type III nylon cord around the honeycomb stack and under the parachute stowage platform. Tie the ends with a surgeon's knot and a locking knot.

Figure 4-41. Parachute filler prepared

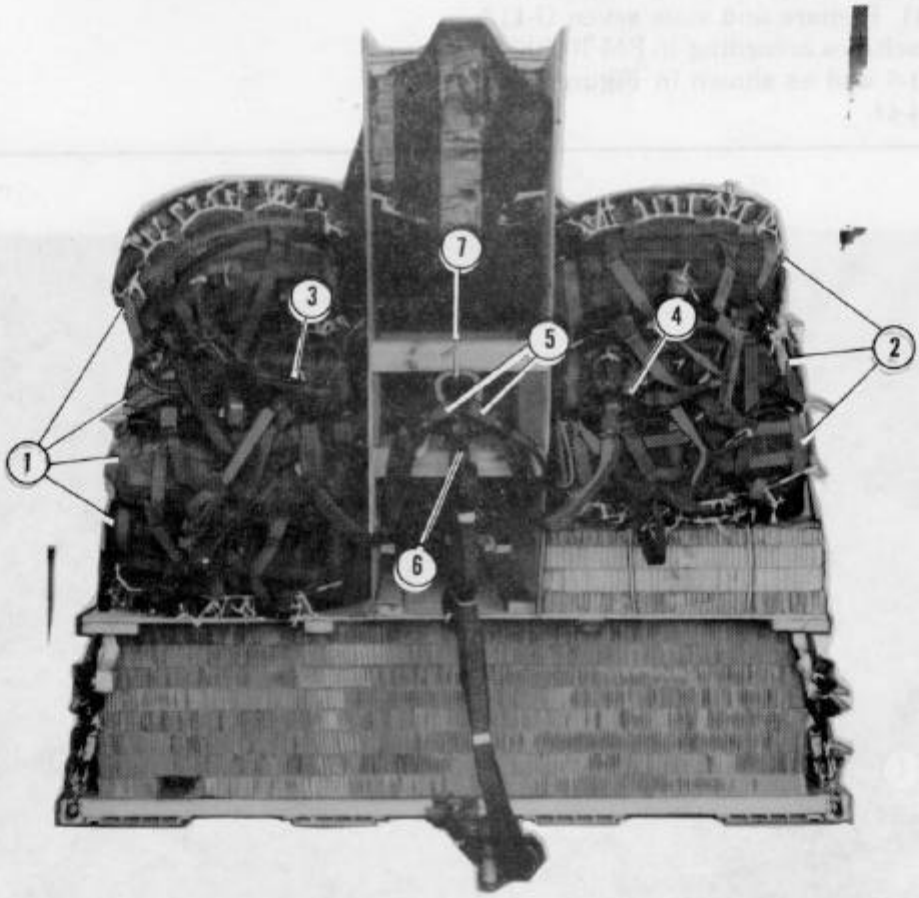

1. Place four G-11A cargo parachutes on the left side of the parachute stowage platform.
2. Place three G-11A cargo parachutes on the right side of the parachute stowage platform.
3. Group the deployment bag bridle loops of the four cargo parachutes on the left with a large clevis. Install a 3-foot (4-loop), type XXVI nylon webbing sling to the clevis bolt.
4. Repeat the procedures in step 3 for the three cargo parachutes on the right.
5. Group the two 3-foot (4-loop), type XXVI nylon webbing slings to a large clevis.
6. Install a 9-foot (4-loop), type XXVI nylon webbing deployment line to the clevis bolt.
7. Safety the large clevis to the top rear 2- by 4- by 20 3/4-inch lumber on the parachute protector boards with a double length of type I, 1/4-inch cotton webbing.

Figure 4-42. Parachutes stowed

CAUTION
The load binders of the parachute restraint straps must be safetied to the clevis with type III nylon cord to prevent loss during airdrop.

(1) Run a length of type X nylon webbing (restraint strap) through the right middle hole on the parachute stowage platform, through the middle outside carrying handles, over the parachute protector boards, through the left outside middle carrying handles, and through the middle hole on the parachute stowage platform. Secure both ends with D-rings and load binders to clevises 19 and 19A.

(2) Run a second restraint strap through the right front hole of the parachute stowage platform, through the top outside carrying handles and bag bridles, around the front of the parachute protector boards, through the bag bridles and the outside carrying handles, and through the left front hole of the parachute protector boards. Secure both ends with D-rings and load binders to clevises 18 and 18A.

Figure 4-43. Front and middle parachute restraint straps installed

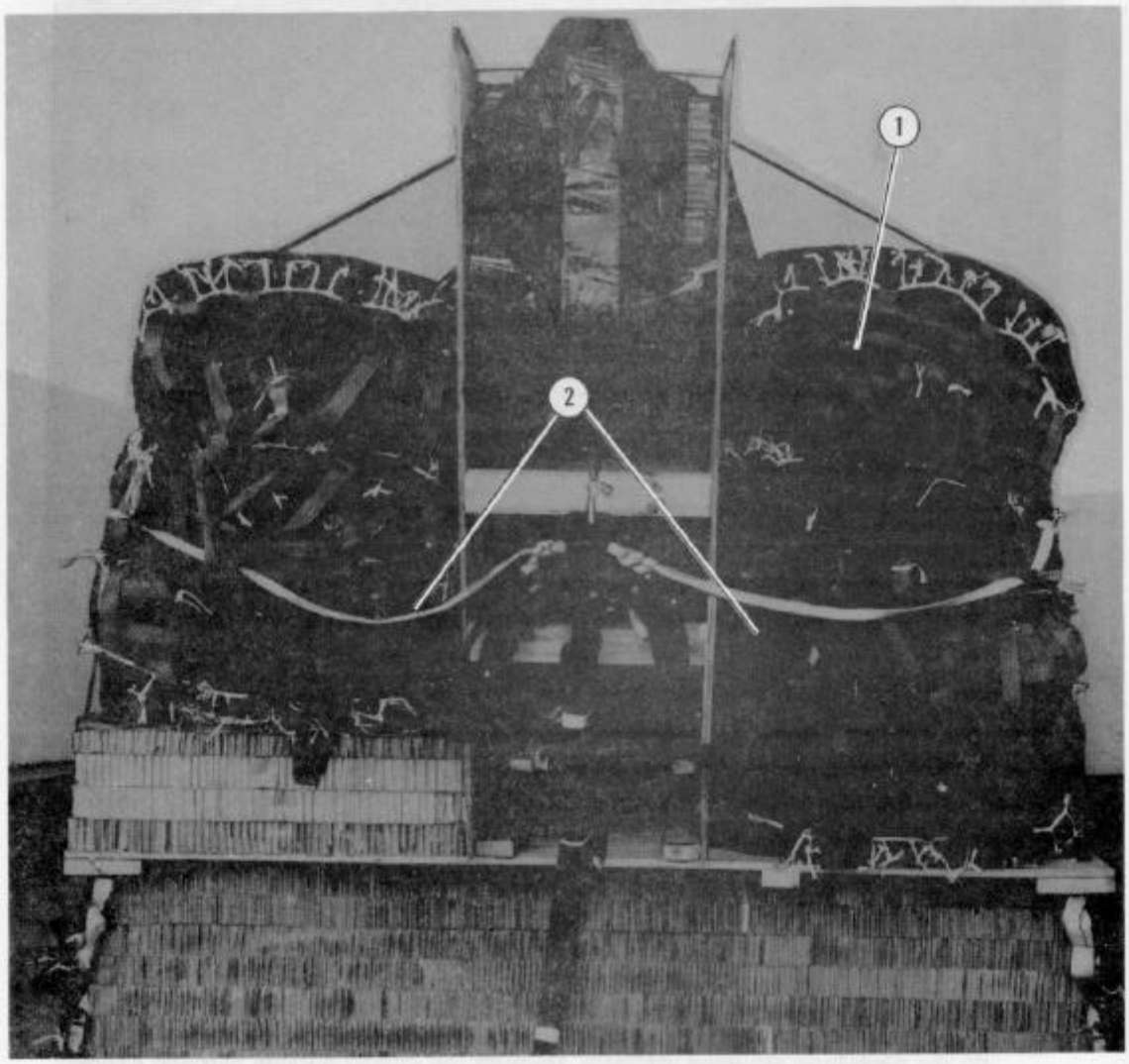

(1) Run a third restraint strap through the right rear hole of the parachute stowage platform, through the bottom outside carrying handles and bag bridles, and through the left rear hole of the parachute stowage platform. Secure both ends with D-rings and load binders to clevises 21 and 21A.

(2) Install two multicut parachute release straps with three release knives according to FM 10-500-2/TO 13C7-1-5.

Figure 4-44. Rear parachute restraint strap and multicut release knives installed

4-14. Installing Extraction System

Install the components of the EFTC according to FM 10-500-2/TO 13C7-1-5 and as shown in Figure 4-45.

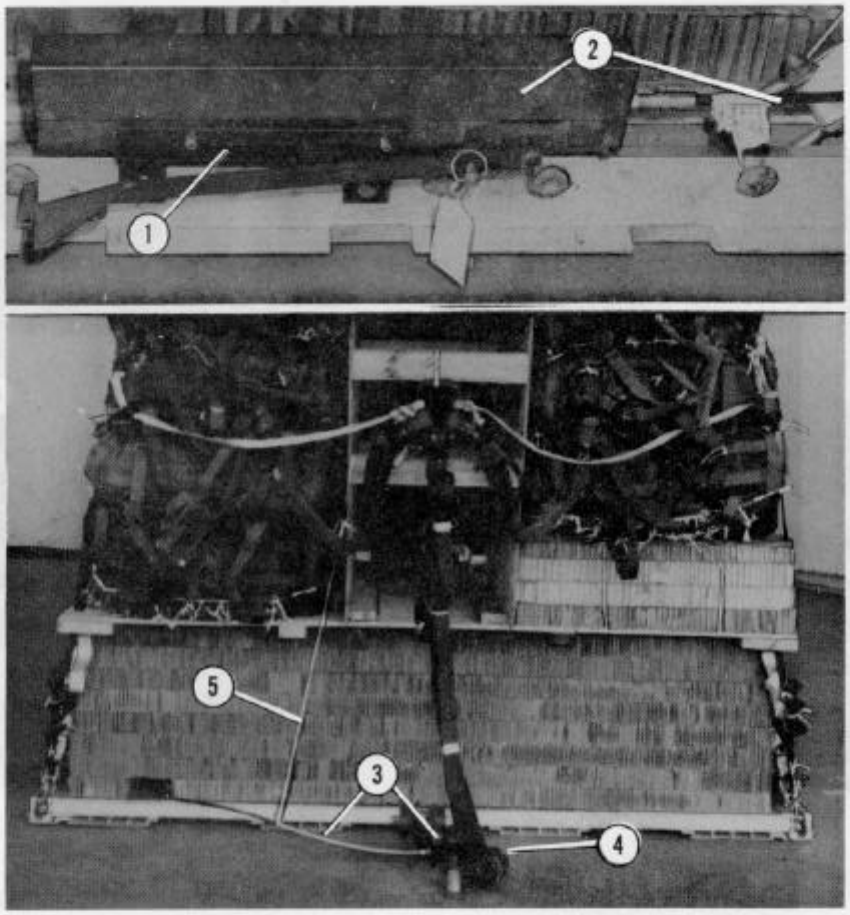

1. Install the actuator brackets to the front mounting holes in the left platform side rail.
2. Install the actuator, and attach a 24-foot cable. Route the cable to the inside of the lashings and under the parachute stowage platform.
3. Install the latch assembly, and attach the cable using the short extraction link.
4. Attach the free end of the 9-foot (4-loop), type XXVI nylon webbing deployment line to the top link assembly. S-fold the deployment line, and tape or tie the fold in two places with type I, 1/4-inch cotton webbing.
5. Safety the cable to the parachute protector board with a length of type III nylon cord.

Figure 4-45. EFTC installed

4-15. Installing Release System

Prepare and attach an M-2 cargo parachute release according to FM 10-500-2/TO 13C7-1-5 and as shown in Figure 4-46.

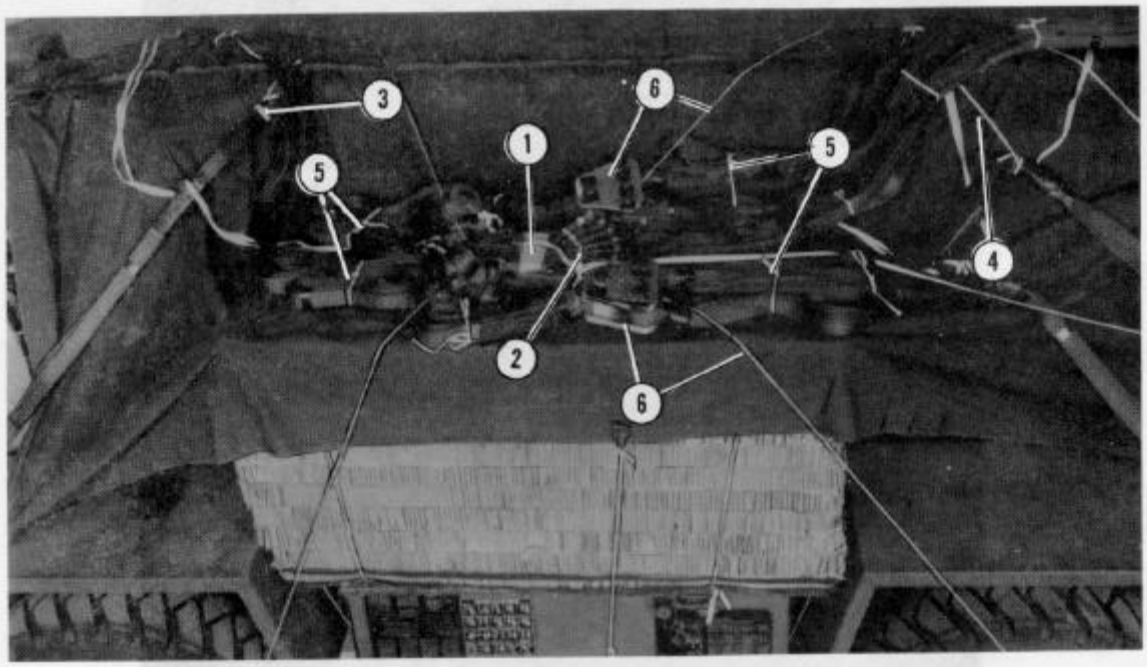

1. Place the M-2 cargo parachute release on top of the parachute release support.
2. Attach the parachute risers to the release according to FM 10-500-2/TO 13C7-1-5.
3. Safety the front suspension slings to the upper lifting provision on the front of the vehicle.
4. Safety the antitumble slings with a length of type I, 1/4-inch cotton webbing by tying it to the left sling, to the right sling, and over the top of the boom.
5. S-fold the excess, and tie it with type I, 1/4-inch cotton webbing.
6. Place the four-point links on each side of the release. Secure the four-point links with the M-2 release with a length of type III nylon cord to the platform bushings.

Figure 4-46. M-2 release installed

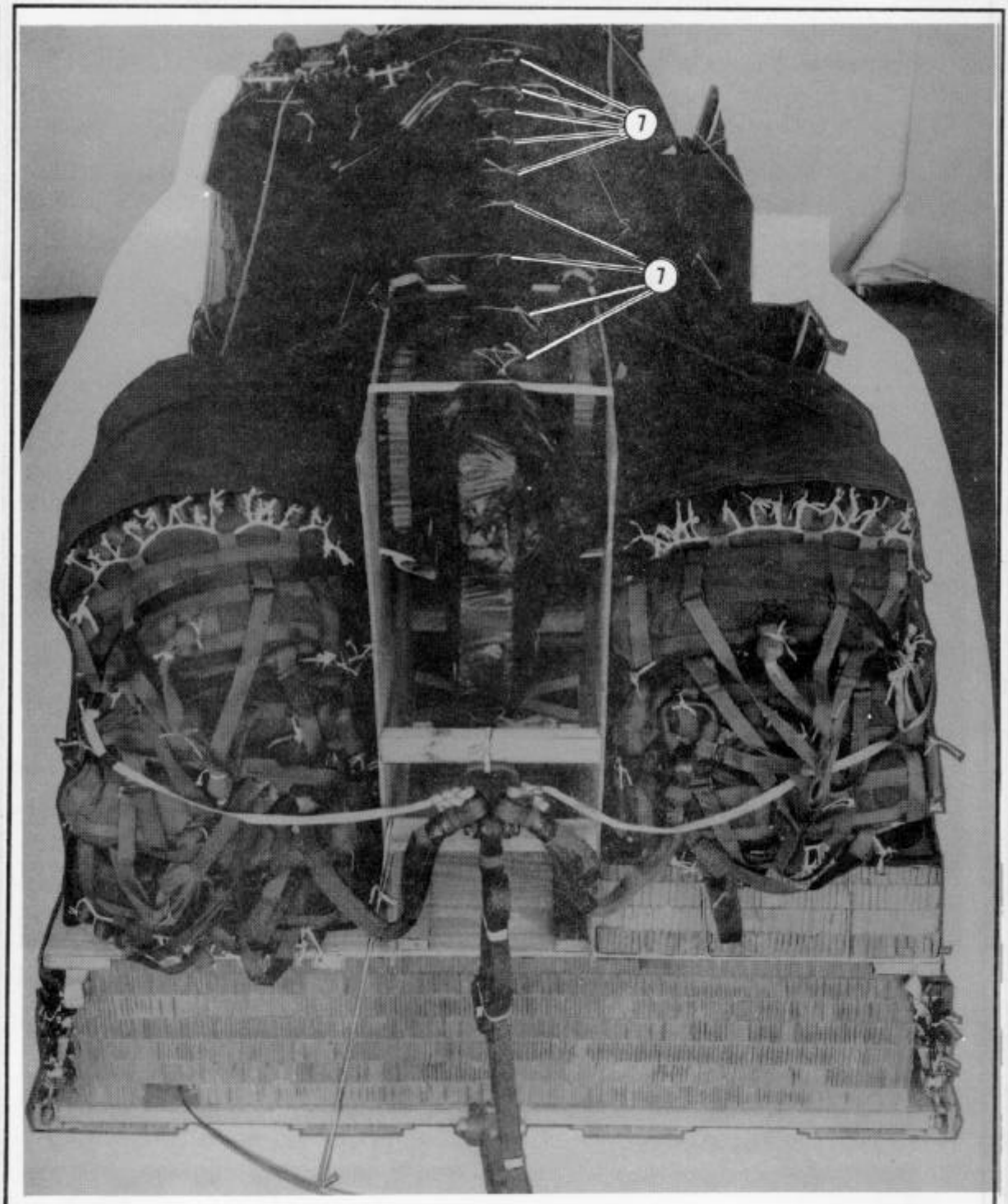

(7) Secure the risers on top of the boom with lengths of type I, 1/4-inch cotton webbing.

Figure 4-46. M-2 release installed (continued)

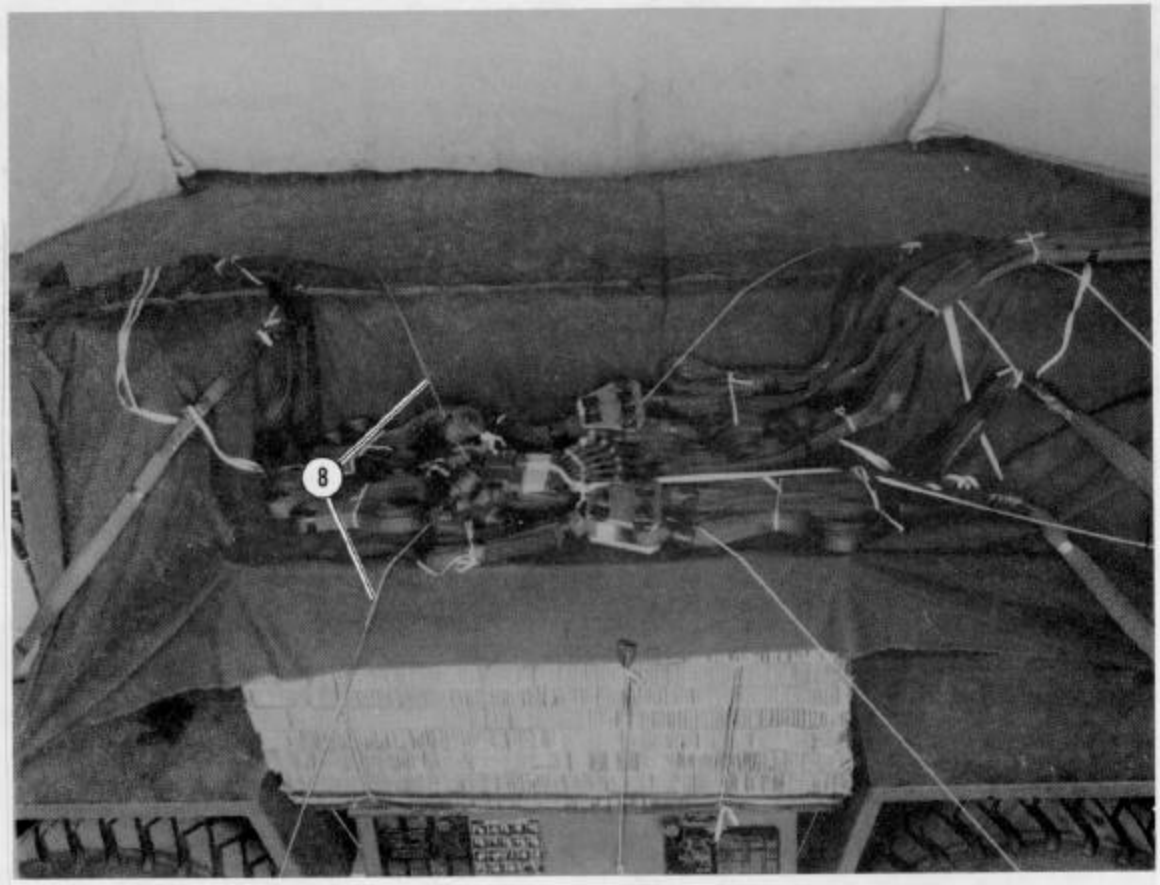

(8) Secure the M-2 release with a length of type III nylon cord to clevises 3 and 3A.

Figure 4-46. M-2 release installed (continued)

4-16. Installing Provisions for Emergency Restraints

Install the emergency restraints according to FM 10-500-2/TO 13C7-1-5.

4-17. Placing Extraction Parachutes

Place the extraction parachutes as described below.

a. C-130 Aircraft. Place two 28-foot cargo extraction parachutes and a 60-foot (6-loop), type XXVI nylon webbing extraction line on the load for installation in the aircraft.

b. C-141 Aircraft. Place two 28-foot cargo extraction parachutes and a 120-foot (6-loop), type XXVI nylon webbing extraction line on the load for installation in the aircraft.

4-18. Marking Rigged Load

Mark the rigged load according to FM 10-500-2/TO 13C7-1-5 and as shown in Figure 4-47. Complete DD Form 1387-2 (Special Handling Data/Certification), and securely attach it to the load. Indicate on DD Form 1387-2 that the fuel tank and battery have been prepared according to AFR 71-4/TM 38-250. If the load varies from the one shown, the weight, height, CB, and parachute requirements must be recomputed.

4-19. Equipment Required

Use the equipment listed in Table 4-2 to rig this load.

CAUTION

Make the final rigger inspection required by FM 10-500-2/TO 13C7-1-5 before the load leaves the rigging site.

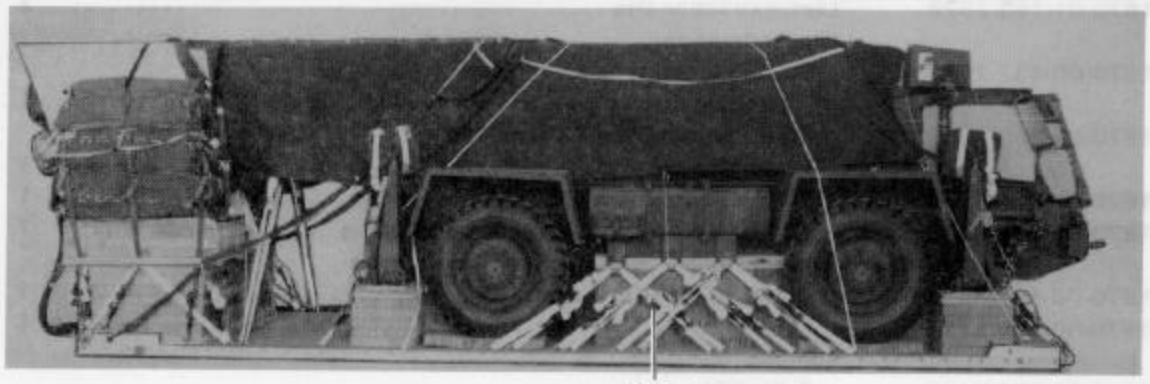

RIGGED LOAD DATA

Weight: Load shown	30,368 pounds
Maximum load allowed	30,400 pounds
Height	100 inches
Width	108 inches
Length	347 inches
Overhang: Front	21 3/4 inches
Rear	36 3/4 inches
CB (from front edge of platform)	123 inches

Figure 4-47. Koehring 7 1/2-ton crane rigged on a type V platform for low-velocity airdrop

Table 4-2. Equipment required for rigging the Koehring 7 1/2-ton crane on a type V platform for low-velocity airdrop

National Stock Number	Item	Quantity
1670-00-162-4979	Adapter, link assembly	1
8040-00-273-8713	Adhesive, paste, 1-gal	As required
1670-00-568-0323	Band, rubber, retainer	As required
3990-00-937-0272	Binder, load, 10,000-lb	55
	Clevis, suspension:	
4030-00-678-8562	3/4-in (medium)	6
4030-00-090-5354	1-in (large)	9
8305-00-242-3593	Cloth, cotton duck, 60-in	As required
4020-00-240-2146	Cord, nylon, type III, 550-lb	As required
1670-00-434-5782	Coupling, airdrop, extraction force transfer w 24-ft cable	1
8135-00-664-6958	Cushioning material, packaging, cellulose wadding	As required
5365-00-937-0147	D-ring, heavy-duty, 10,000-lb	55
8305-00-958-3685	Felt, 1/2-in thick	As required
1670-01-183-2678	Leaf, extraction line	2
	Line, extraction:	
1670-00-432-2513	60-ft (5-loop), type XXVI nylon webbing *or*	1
1670-00-003-1957	60-ft (6-loop), type XXVI nylon webbing *or*	1
1670-01-064-4454	60-ft (6-loop), type XXVI nylon webbing	1
1670-01-062-6312	120-ft (6-loop), type XXVI nylon webbing	1
	Link assembly:	
1670-00-168-6067	Coupling, EFTC	1
1670-00-006-2752	Four-point	1
	Lumber:	
5510-00-220-6146	2- by 4-in:	
	20-in	8
	20 3/4-in	4
	36-in	10
	48-in	4
	51 1/2-in	2
	56-in	1
	63-in	1
	67-in	8
5510-00-220-6448	2- by 6- by 48-in	2
5510-00-220-6274	4- by 4- by 192-in	1
5315-00-010-4657	Nail, steel wire, common, 6d	As required
1670-00-753-3928	Pad, energy-dissipating, honeycomb,	
	3- by 36- by 96-in:	38 sheets
	6- by 26-in	(1)
	8- by 36-in	(1)
	10- by 40-in	(1)

Table 4-2. Equipment required for rigging the Koehring 7 1/2-ton crane on a type V platform for low-velocity airdrop (continued)

National Stock Number	Item	Quantity
	13 1/2- by 9-in	(4)
	14- by 96-in	(2)
	16- by 9-in	(14)
	16- by 36-in	(4)
	18- by 6-in	(6)
	23- by 41-in	(1)
	25- by 26-in	(2)
	26- by 9-in	(1)
	27- by 45-in	(1)
	33- by 67-in	(16)
	36- by 41-in	(1)
	36- by 48-in	(4)
	36- by 55-in	(1)
	36- by 64 1/2-in	(11)
	36- by 80-in	(1)
	53- by 9-in	(5)
	96- by 36-in	(17)
	Parachute:	
	Cargo:	
1670-00-269-1107	G-11A *or*	7
1670-01-016-7841	G-11B	7
1670-00-040-8135	Cargo extraction, 28-ft, heavy-duty	2
	Platform, AD, type V, 24-ft:	1
	Bracket:	
1670-01-162-2375	Inside EFTA	(1)
1670-01-162-2374	Outside EFTA	(1)
1670-01-162-2372	Clevis assembly	(44)
1670-01-162-2376	Extraction bracket assembly	(1)
1670-01-247-2389	Suspension link	(2)
1670-01-162-2381	Tandem link	(2)
	Plywood:	
5530-00-129-7777	1/2- by 48- by 96-in	2
5530-00-128-4981	3/4-in:	
	13 1/2- by 9-in	2
	16- by 9-in	2
	18- by 6-in	1
	23 1/2- by 51 1/2-in	1
	26- by 9-in	1
	33- by 67-in	6
	48- by 96-in	1
	58- by 12-in	2
	96- by 12-in	2
	96- by 36-in	4
1670-01-097-8817	Release, cargo parachute, M-2	1

Table 4-2. Equipment required for rigging the Koehring 7 1/2-ton crane on a type V platform for low-velocity airdrop (continued)

National Stock Number	Item	Quantity
	Sling, cargo airdrop, type XXVI nylon webbing:	
	For antitumble sling:	
1670-01-062-6302	20-ft (2-loop)	2
	For deployment line:	
1670-00-432-2501	9-ft (4-loop) *or*	1
1670-01-062-6305	9-ft (4-loop)	1
	For extraction line:	
1670-01-062-6311	120-ft (2-loop)	8
	For lifting sling:	
1670-00-432-2507	16-ft (4-loop) *or*	4
1670-00-003-7237	16-ft (4-loop) *or*	4
1670-01-062-6308	16-ft (4-loop)	4
	For riser extension:	
1670-01-062-6311	120-ft (2-loop)	8
	For suspension sling:	
1670-00-432-2499	3-ft (4-loop) *or*	4
1670-01-062-6306	3-ft (4-loop)	4
1670-00-432-2506	12-ft (4-loop) *or*	2
1670-01-062-6307	12-ft (4-loop)	2
1670-00-432-2507	16-ft (4-loop) *or*	4
1670-00-003-7237	16-ft (4-loop) *or*	4
1670-01-062-6308	16-ft (4-loop)	4
1670-00-040-8219	Strap, parachute release, multicut comes w 3 knives	2
7510-00-266-5016	Tape, adhesive, 2-in	As required
1670-00-937-0271	Tiedown assembly, 15-ft	55
1670-00-045-9974	Web, adapter, 9-ft (for 28-ft parachute)	2
	Webbing:	
8305-00-268-2411	Cotton, 1/4-in, type I	As required
	Nylon:	
	Tubular:	
8305-00-082-5752	1/2-in *or*	As required
8305-00-268-2453	1/2-in	As required
8305-00-261-8584	Type X *or*	As required
8305-00-260-6890	Type X	As required

GLOSSARY

AD	airdrop
AFB	Air Force base
AFR	Air Force regulation
AFTO	Air Force technical order
attn	attention
C	change
CB	center of balance
d	penny
DA	Department of the Army
DC	District of Columbia
DD	Department of Defense
diam	diameter
EFTA	extraction force transfer actuator
EFTC	extraction force transfer coupling
FM	field manual
ft	feet/foot
gal	gallon
HQ	headquarters
in	inch
LAPE	low-altitude parachute extraction
lb	pound
no	number
NSN	national stock number
OVM	operator vehicle maintenance
rel	release
SL/CS	static line/connector strap
TM	technical manual
TO	technical order
TRADOC	United States Army Training and Doctrine Command
US	United States
w	with
wt	weight
yd	yard

REFERENCES

AFR 71-4/TM 38-250	Packaging and Materials Handling: Preparing Hazardous Materials for Military Air Shipments
FM 10-500-2/TO 13C7-1-5	Airdrop of Supplies and Equipment: Rigging Airdrop Platforms
TM 10-1670-208-20&P/ TO 13C3-4-12	Organizational Maintenance Manual Including Repair Parts and Special Tools List for Platforms, Type II Modular and LAPES/Airdrop Modular
TM 10-1670-268-20&P/ TO 13C7-52-22	Organizational Maintenance Manual With Repair Parts and Special Tools List: Type V Airdrop Platform
TM 10-1670-286-20/ TO 13C5-2-41	Unit Maintenance Manual for Sling/Extraction Line Panel (Including Stowing Procedures)
TO 1C-141-9	Loading Instructions, USAF Series C-141 Aircraft
AFTO Form 22	Technical Order Publication Improvement
DA Form 2028	Recommended Changes to Publications and Blank Forms
DD Form 1387-2	Special Handling Data/Certification Report