FM 10-450-3
MCRP 4-23E, VOL I
NWP 3-04.11

AFJMAN 11-223, VOL I
COMDTINST M13482.2A

# MULTISERVICE HELICOPTER SLING LOAD:

# BASIC OPERATIONS AND EQUIPMENT

**DISTRIBUTION RESTRICTION:** APPROVED FOR PUBLIC RELEASE; DISTRIBUTION IS UNLIMITED

**HEADQUARTERS**
**DEPARTMENT OF THE ARMY**
**DEPARTMENT OF THE AIR FORCE**
**DEPARTMENT OF THE NAVY**
**DEPARTMENT OF TRANSPORTATION**

HEADQUARTERS
DEPARTMENT OF THE ARMY
DEPARTMENT OF THE AIR FORCE
DEPARTMENT OF THE NAVY
DEPARTMENT OF TRANSPORTATION
Washington, DC, 10 April 1997

# MULTISERVICE HELICOPTER SLING LOAD: BASIC OPERATIONS AND EQUIPMENT

## PREFACE

**Note: Effective 1 October 1997 all Army loads will require an inspection by a qualified Sling Load Inspector. See Appendix I.**

This manual is one of a series of manuals for aviation and ground personnel who perform helicopter sling load missions ashore or aboard ship. Other manuals in this series are FM 55-450-4/FMFRP 5-31, VOL II/NWP 42-1,VOL II/AFR 50-16, VOL II/COMDTINST M13482.3 and FM 55-450-5/FMFRP 5-31, VOL III/NWP 42-1,VOL III/AFR 50-16, VOL III/COMDTINST M13482.4.

These manuals are a coordinated effort of the US Army, US Marine Corps, US Navy, US Air Force, and US Coast Guard. All services participate in the sling load certification program begun by the Army in 1984. These manuals include standardized rigging procedures and other information from that program.

Efforts were made to standardize ground crew and hookup procedures and terminology. The terms "helicopter" and "aircraft" refer to vertical lift aircraft that participate in sling load operations. Where service-unique requirements apply to an entire chapter or body of text, the service initials are at the beginning of the chapter or text. Otherwise the initials are at the end of the applicable sentence.

The information in this manual will familiarize personnel with the sling sets, cargo nets, and other sling load equipment in the DOD inventory. It will also acquaint them with the helicopters used for sling load and provide basic procedures for rigging and hooking up loads. Rigging equipment and procedures described in this manual may not be authorized for all aircraft or services because of equipment or service restrictions. This manual does not provide details on aviation operations nor does it present detailed data that is normally contained in unit standing operating procedures (SOPs).

**DISTRIBUTION RESTRICTION:** Approved for public release; distribution is unlimited.

*This publication supersedes FM 55-450-3/FMFRP 5-31, VOL I/NWP 42-1, VOL I/AFR 50-16, VOL I, COMDTINST M13482.2, 11 February 1991.

This manual implements the following International Standardization Agreements (STANAGs):

2949 - Technical Criteria for External Cargo Carrying Slings

2950 - Technical Criteria for External Cargo Carrying Nets

3117 - Aircraft Marshalling Signals

3542 - Technical Criteria for the Transport of Cargo by Helicopter

The proponent of this publication is HQ TRADOC. Recommendations for changes or improvement to the manual are requested.

Army personnel submit DA Form 2028 (Recommended Changes to Publications and Blank Forms) to:

Aerial Delivery and Field Services Department
USA Quartermaster Center and School
ATTN: ADMMO
1010 Shop Road
Fort Lee, VA 23801-1502

Navy personnel submit recommended changes to:

Chief of Naval Operations
Code OP 506
Washington, DC 20350-2000

Marine Corps personnel submit user suggestion form to:

Commanding General
Marine Corps Combat Development Command
Doctrine Division C42
Quantico, VA 22134-5021

With a copy to:

Commanding General
Marine Corps Systems Command (PSE)
Quantico, VA 22134-5021

Air Force personnel submit AF Form 847 (Recommendation for Change of Publication) to:

HQ AFSOC/DOXT
Hurlburt Field, FL 32544-5273

Coast Guard personnel submit rapidraft letter (CG-3883) or AF Form 847 to:

Commandant (G-OAV)
US Coast Guard
2100 2nd Street SW
Washington, DC 20593

With a copy to:

Commander
Aviation Training Center (TRADIV)
Mobile, AL 36117

# TABLE OF CONTENTS


| | | Paragraph | Page |
|---|---|---|---|
| **PREFACE** | | | i |
| **CHAPTER 1** | **FUNDAMENTAL PRINCIPLES OF SLING LOAD** | | |
| | Introduction | 1-1 | 1-1 |
| | Employment Considerations | 1-2 | 1-1 |
| | Factors Affecting Helicopter Lift Performance | 1-3 | 1-1 |
| | Request Procedures | 1-4 | 1-2 |
| | Responsibilities | 1-5 | 1-2 |
| | Safety | 1-6 | 1-4 |
| | Planning | 1-7 | 1-4 |
| | Coordination | 1-8 | 1-5 |
| | Training | 1-9 | 1-5 |
| | Operational Risk Management | 1-10 | 1-6 |
| **CHAPTER 2** | **AIRCRAFT CARGO HOOK SYSTEMS** | | |
| | Introduction | 2-1 | 2-1 |
| | Defining Cargo Hook Systems | 2-2 | 2-1 |
| | Cargo Hook Cross Designation | 2-3 | 2-1 |
| | Helicopter Pendant Systems (USMC, USN) | 2-4 | 2-1 |
| | Releasable Swivel Hook Pendant Sling | 2-5 | 2-1 |
| | Helicopter Cargo Hook Systems | 2-6 | 2-2 |
| **CHAPTER 3** | **PERSONNEL, SUPPORT EQUIPMENT, AND PROTECTION PROCEDURES** | | |
| | Introduction | 3-1 | 3-1 |
| | Ground Crew | 3-2 | 3-1 |
| | Preparing For The Operation | 3-3 | 3-3 |
| | Hookup Team Responsibilities | 3-4 | 3-3 |
| | Personnel Briefing | 3-5 | 3-4 |
| | Receiving Team Responsibilities | 3-6 | 3-4 |
| | Personal Protective Equipment | 3-7 | 3-5 |
| | Discharging Static Electricity | 3-8 | 3-5 |
| | Ground Crew Rendezvous Point (USA) | 3-9 | 3-8 |
| | Hand And Arm Signals | 3-10 | 3-9 |
| **CHAPTER 4** | **LANDING SITE SELECTION AND PREPARATION** | | |
| | Introduction | 4-1 | 4-1 |
| | Landing Zone Designation | 4-2 | 4-1 |
| | Landing Site Selection | 4-3 | 4-1 |
| | Clearing Obstacles | 4-4 | 4-2 |

| | | Paragraph | Page |
|---|---|---|---|
| | Slope of Surface | 4-5 | 4-2 |
| | Approaches to Landing Site | 4-6 | 4-3 |
| | Aircraft Formation Approach (USA) | 4-7 | 4-6 |
| | Marking Landing Points | 4-8 | 4-11 |
| | Marking Obstacles | 4-9 | 4-11 |
| **CHAPTER 5** | **HOOKUP AND RELEASE PROCEDURES AND RELATED OPERATIONS** | | |
| | Introduction | 5-1 | 5-1 |
| | General Hookup Procedures | 5-2 | 5-1 |
| | Safety Precautions for Hookup Personnel | 5-3 | 5-6 |
| | Load Release Procedures | 5-4 | 5-6 |
| | Dual-Point Hookup Procedures | 5-5 | 5-6 |
| | Multiple Single-Point Load Preparation | 5-6 | 5-7 |
| | Piggyback/Accompanying Loads | 5-7 | 5-7 |
| | Extended Sling System | 5-8 | 5-7 |
| | Cargo Hook Loading Pole | 5-9 | 5-9 |
| | Cold Weather Operations | 5-10 | 5-10 |
| | Desert Operations | 5-11 | 5-11 |
| | Night Operations | 5-12 | 5-12 |
| | Shipboard Operations and Safety Procedures | 5-13 | 5-12 |
| **CHAPTER 6** | **CARGO SLINGS** | | |
| | Introduction | 6-1 | 6-1 |
| | Request for Waivers | 6-2 | 6-1 |
| | 10,000- and 25,000-Pound Capacity Sling Sets | 6-3 | 6-1 |
| | 15,000-Pound Capacity Nylon and Chain Multileg Sling Set | 6-4 | 6-10 |
| | 40,000-Pound Capacity Sling Set | 6-5 | 6-18 |
| | Nylon Flat-Web Slings | 6-6 | 6-21 |
| **CHAPTER 7** | **CARGO NETS** | | |
| | Introduction | 7-1 | 7-1 |
| | Flat-Web Nylon Cargo Net | 7-2 | 7-1 |
| | 5,000- and 10,000-Pound Capacity Knotless Nylon Cord Cargo Nets | 7-3 | 7-2 |
| | Placing All Netted Loads for Pickup | 7-4 | 7-6 |
| **CHAPTER 8** | **A-22 CARGO BAG, PALLET SLINGS, PENDANTS, AND SUPPLEMENTAL EQUIPMENT** | | |
| | Introduction | 8-1 | 8-1 |
| | A-22 Cargo Bag | 8-2 | 8-1 |
| | Pallet Slings | 8-3 | 8-3 |
| | Reach Pendants | 8-4 | 8-6 |
| | Vertical Pendants | 8-5 | 8-7 |
| | Supplemental Equipment | 8-6 | 8-9 |

| | | Paragraph | Page |
|---|---|---|---|
| **CHAPTER 9 VERTICAL REPLENISHMENT (USN, USMC, USCG)** | | | |
| | Introduction | 9-1 | 9-1 |
| | Vertical Replenishment Aircraft | 9-2 | 9-1 |
| | Coast Guard Dangerous Cargo Vertrep | 9-3 | 9-1 |
| | Factors Affecting VERTREP | 9-4 | 9-1 |
| | Vertical Replenishment Equipment | 9-5 | 9-2 |
| | Load Preparation | 9-6 | 9-4 |
| | Weight and Identification of Loads | 9-7 | 9-6 |
| | Attaching Slings to Loads | 9-8 | 9-7 |
| | Cargo Staging | 9-9 | 9-9 |
| | Static Electricity Discharge Wand | 9-10 | 9-10 |
| | Load Transfer Procedures | 9-11 | 9-10 |
| | Load Delivery | 9-12 | 9-11 |
| | Clearing the VERTREP Area | 9-13 | 9-11 |
| | Safety | 9-14 | 9-12 |
| | Night VERTREP | 9-15 | 9-13 |
| | Night VERTREP Procedures | 9-16 | 9-13 |
| **APPENDIX A** | **HAND-AND-ARM SIGNALS** | | **A-1** |
| **APPENDIX B** | **NATIONAL STOCK NUMBERS FOR SLINGS, NETS, AND SPARE PARTS** | | **B-1** |
| **APPENDIX C** | **SLING CONVERSION CHARTS** | | **C-1** |
| **APPENDIX D** | **FABRICATION OF A FIELD EXPEDIENT STATIC DISCHARGE WAND** | | **D-1** |
| **APPENDIX E** | **SLING LOAD OPERATION CHECKLIST (USMC HELICOPTER SUPPORT TEAM)** | | **E-1** |
| **APPENDIX F** | **ZONE INSPECTION, PLANNING, PREPARATION, AND OPERATION (ZIPPO) EVALUATION BRIEF FORMAT (NWP 55-9-ASH)** | | **F-1** |
| **APPENDIX G** | **MC-140 HELMET, COMPONENT LISTING (USMC HST) TAMCN C4992** | | **G-1** |
| **APPENDIX H** | **AIR FORCE (TAC) UNIT EQUIPMENT REQUIREMENTS** | | **H-1** |
| **APPENDIX I** | **SLING LOAD INSPECTION RECORD** | | **I-1** |
| **APPENDIX J** | **RECOMMENDED SLING LOAD TRAINING** | | **J-1** |
| **GLOSSARY** | Section 1. Acronyms and Abbreviations | | Glossary-1 |
| | Section 2. Terms | | Glossary-2 |
| **REFERENCES** | | | References-1 |

# CHAPTER 1
# FUNDAMENTAL PRINCIPLES OF SLING LOAD

## 1-1. INTRODUCTION

The helicopter sling load method of carrying cargo and equipment overcomes many of the obstacles that hinder other modes of movement. Helicopter sling load operations are used extensively in the ship-to-shore movement of cargo and equipment during amphibious operations, movement of supplies and equipment over the battlefield, vertical replenishment of ships, and firepower emplacement. The purpose of this chapter is to discuss helicopter employment considerations, request procedures, responsibilities, safety, and planning for sling load missions.

## 1-2. EMPLOYMENT CONSIDERATIONS

**a. Advantages of Sling Load.** The sling load method of moving cargo and equipment has some advantages over other methods. These advantages are:

**(1)** The rapid movement of heavy, outsized equipment, or emergency supplies directly to the user.

**(a)** The ability to bypass surface obstacles.

**(b)** The rapid relocation of supplies and equipment.

**(2)** The use of multiple flight routes and landing sites to enhance sustainability and security of ground units.

**(3)** The establishment of multiple landing sites to support the maneuvering unit requirements.

**(4)** Greater movement flexibility for the ground commander to accomplish the tactical mission.

**b. Limitations of Sling Load.** The sling load method of Aerial Delivery includes the following drawbacks:

**(1)** The weight of the load is restricted to the aircraft's operating capability.

**(2)** Load instability during flight may restrict aircraft airspeed or maneuvering capabilities.

**(3)** Adverse weather and darkness (low visibility) may limit sling load operations.

**(4)** Atmospheric conditions (pressure, altitude, temperature, and winds) affect the helicopter's lift capacity.

**(5)** A limited number of helicopters are available for sling load missions.

**(6)** Landing site surface conditions may restrict helicopter operation. Loose debris, dust, and snow are safety hazards that also limit pilot visibility.

**(7)** Landing site size must be increased during the hours of darkness or reduced visibility to allow the pilot more room to maneuver.

## 1-3. FACTORS AFFECTING HELICOPTER LIFT PERFORMANCE

The supported unit should coordinate with the aviation unit prior to any sling load mission to determine the accurate lifting capability of the helicopter. Several factors affect how much weight a helicopter can carry.

**a. Altitude.** The helicopter loses rotor efficiency at higher altitudes and requires more power to hover than at lower altitudes. This means less capability to lift cargo.

**b. Temperature.** High air temperature has an adverse effect on the power output of helicopter engines. An increase in temperature decreases engine performance. This means decreased lift capability.

**c. Humidity.** As the relative humidity increases, the helicopter's lift performance decreases.

**d. Wind.** Wind affects helicopter performance by increasing rotor lift without an increase in engine power. Therefore, less power is required to hover into the wind than when no wind conditions exist; also, with constant power, the helicopter can hoverinto the wind with higher payloads. This is why wind conditions and direction are important to the performance of the helicopter.

## 1-4. REQUEST PROCEDURES

Aerial support request procedures depend on whether the request is a preplanned mission or an immediate mission.

**a. Preplanned Missions.** Aerial resupply missions that are based on known or projected requirements and are programmed in advance are preplanned requests. The force commander establishes the amount of time required to coordinate preplanned support. These requests are submitted through the S4/G4 logistical channels. Once validated, the request is passed by the S3/G3 to the aviation operations.

**b. Immediate Missions.** Immediate requests are for unanticipated, urgent, or priority missions. In order to reduce delays, immediate requests are submitted through the S3/G3 operational channels to aviation operations.

**c. Request Forms.** Support requests should be processed using DD Form 1974 (Joint Tactical Airlift Request) or in an appropriate format in accordance with standing operating procedures (SOP). Marine Corps mission requests are also submitted to the appropriate command using the Assault Support Request Form. This form may be obtained from each service's respective operations section.

## 1-5. RESPONSIBILITIES

There are normally three elements involved in sling load operations: thesupported unit that requests the mission, the aviation unit that provides the aircraft, and the receiving unit that receives the cargo. Sometimes, as during a unit relocation, the supported and receiving unit are the same. The responsibilities and functions of each element are discussed below.

**a. Supported Unit.** The supported unit is responsible for the following sling load applications:

**(1)** Landing site selection and control (including communications). The flight deck is the landing site during shipboard operations and will be controlled by ship personnel.

**(2)** Rigging the cargo using procedures in the appropriate rigging manual.

**(3)** Providing qualified inspectors and inspection forms (Appendix I) to inspect the rigged load.

**(4)** Distributing completed copies of the Sling Load Inspection Record prior to the time of the sling load mission according to Appendix I.

**(5)** Connecting the rigged load to the aircraft cargo hook unless that responsibility has been assigned to another unit.

**(6)** Verifying the total weight of the load (including rigging equipment). The supported unit relays the load weight along with any other information that may affect the load's flight stability to the pilot.

**WARNING**
**Make sure you accurately determine and report the load's weight to the aircrew. Loads that you report inaccurately could cause the pilot to lose control of the aircraft.**

**(7)** Providing instructions, as required, to the aviation unit on the location of the delivery point landing site.

**(8)** Providing disposition instructions to both the aviation and receiving units for return of cargo slings, A-22 cargo bags, cargo nets, containers, and other rig-

ging equipment.

**(9)** Securing and protecting sensitive items of supply and equipment.

**(10)** Providing communications and terminal guidance during small scale operations.

**(11)** Ensuring proper supervision of the sling load operation including load rigging.

**(12)** (USA, USAF, USCG) Providing qualified ground crews for:

**(a)** Rigging and inspecting all loads, guiding the helicopter, hooking up the loads, and clearing the aircraft for departure. Appendix A describes hand-and-arm signals. (This paragraph implements STANAG 3117.)

**(b)** Requisitioning, storing, inspecting, and maintaining all the rigging equipment needed for sling load operations. Appendix B includes a national stock number listing for sling sets, cargo nets, and miscellaneous equipment.

**(c)** (USA) Designating a safe rendezvous point away from the helicopter emergency landing area.

**(13)** (USN) Providing a qualified sling load team that is aware of the following information:

**(a)** When afloat, the supported unit provides all lifting and rigging equipment.

**(b)** Certain cargo slings may not be available to the supported unit. Coordination is required with a vertical onboard delivery unit for using 15,000-pound and 40,000-pound cargo slings. See Appendix C.

**(14)** (USMC) Provides material used for preparing the cargo such as padding, tape, and rope.

**(15)** (USMC) Establishes helicopter support team (HST) as outlined in FMFM 6-21 and FMFM 4-3. The following are specific responsibilities of the HST:

**(a)** Establishes liaison with aviation and receiving units.

**(b)** Provides slings, nets, and related items for rigging cargo.

**(c)** Provides personnel for rigging, hookup, and staging cargo.

**(d)** Provides personnel for organizing landing site and related duties. Personnel augmentation from the supported unit may be required.

**(e)** Provides landing site control.

**(f)** Ensures a corpsman and radio operator are available at each landing site or that each landing site has access to them for immediate support.

**(g)** Provides accurate cargo weight information to pilot.

**b. Aviation Unit.** The aviation unit is responsible for:

**(1)** Coordinating with the supported and receiving units and, when required, appointing a liaison officer who is familiar with sling load operations.

**(2)** Advising the supported unit on the helicopter capabilities and limitations.

**(3)** Advising the supported and receiving units on the suitability of the selected landing site.

**(4)** Providing comments or recommendations on overall operations relative to safety.

**NOTE: The pilot makes the final decision on whether the cargo will be moved.**

**(5)** Providing assistance, if possible, for recovery and return of the rigging equipment as required by the supported unit.

**(6)** Arranging for the aircraft to be at the landing site on schedule.

**(7)** (USMC) Providing the HST with personnel and equipment for the helicopter control element (HCE) during large scale operations or when the HST nucleus is provided by the landing support company.

**(8)** (USMC) Providing pathfinders to the helicopter assault landing zone contact team, when required.

**(9)** (USCG) Providing cargo slings, nets, and other rigging equipment as required.

**c. Receiving Unit.** The receiving unit is responsible for:

**(1)** Selecting, preparing, and controlling the landing site (to include communications).

**(2)** Receiving and derigging the load.

**(3)** Ensuring proper supervision of the derigging operation.

**(4)** Coordinating the return of lifting equipment and support personnel to the supported unit, if required.

**(5)** Preparing, coordinating, and inspecting backloads, such as slings, cargo nets, and A-22 cargo bags, and preparing them for hookup or loading.

## 1-6. SAFETY

In order to safely conduct sling load operations, each individual must be aware of the safety hazards he will face, such as static electricity, rotor wash, and other operations involving close proximity to the aircraft. The helicopter crew will conduct the flight in accordance with applicable service procedures and regulations.

**a. Static Electricity.** In flight, a helicopter generates and stores a charge of static electricity. When the helicopter lands, this charge passes to the ground through the helicopter grounding system. However, in flight, this charge remains stored in the helicopter until a path is provided to ground. Static electricity must be discharged in all helicopters prior to connecting a cargo sling or net to the aircraft's hook, except when using a reach pendant, even when insulated lineman gloves are worn. To avoid the possibility of a ground crewman being shocked by this static charge, a static discharge wand is used to ground the helicopter. Contact between the wand and cargo hook must be maintained until hookup is completed. Appendix D contains fabrication instructions for a field expedient static discharge wand.

**NOTE: A helicopter will generate static electricty within 5 seconds after grounding is disconnected.**

**WARNING**
**Static electricity is dangerous and may cause injury or death.**

**b. Rotor Wash.** Rotor wash is the high velocity air movement under a hovering helicopter. Large helicopters, such as the CH-47 and CH-53, can generate rotor wash in excess of 120 knots. This strong wind may cause ground crew personnel difficulty in walking or standing and its force can move unsecured material. The greatest rotor wash velocity occurs between 20 and 60 feet outside the rotor disc and will diminish once the aircraft is over the ground crew. Before conducting sling load operations, brief the ground/deck crew on the rotor wash potential of the helicopter.

**WARNING**
**Personnel working beneath a hovering helicopter will wear personal protective equipment. Ground personnel who inadvertently encounter high velocity rotor wash should drop to a sitting or prone position to keep from being injured.**

## 1-7. PLANNING

**a. Purpose of Planning.** A very important part of the sling load mission is prior planning. Prior planning, along with the coordination of plans with the aviation liaison officer, is essential for a smooth, safe operation. During the planning phase, the entire mission is reviewed to include aircraft limitations, landing site selection, and items to be lifted along with their weights. For example, helicopter lift capacity may change depending on envi-

ronmental conditions. Consequently, coordination is made with the aviation unit as to the helicopter's lift capacity. If a particular item of equipment presents a problem that cannot be resolved, it should be referred to the operations department/section of the participating units or another mode of movemnet considered.
Consider the following planning factors:

**(1)** Number of ground crew personnel.

**(2)** Equipment to be moved (for example, weight, size, quantity, and destination).

**(3)** Alternate means of movement available.

**(4)** Number of aircraft and sorties required.

**(5)** Landing site and required delivery time.

**(6)** Special lifting devices required.

**(7)** Primary and alternate radio frequencies and quantity of radios required.

**(8)** Ground crew and aircraft emergency procedures.

**(9)** Review of maps, landing site description, and local terrain features.

**(10)** Safety hazards.

**(11)** Landing site condition and security.

**b. Personnel Requirements.** The number of ground crew personnel needed for sling load operations depends primarily on how the commander plans to accomplish his mission. Selected personnel or all unit members can be trained as ground crew members. Helicopter support teams are the primary source of ground support for the Marine Corps, but selected Marine unit members should be trained as ground crew personnel in case the HST is not available. Consideration for the number of crews needed (including HST) should include:

**(1)** The quantity and type of equipment to be sling loaded.

**(2)** The number of available aircraft.

**(3)** The amount of time that the unit has to relocate or resupply other units.

**(4)** How often the unit will move equipment by helicopter.

**c. Equipment Requirements.** A complete inventory of unit equipment should be made to determine quantity of rigging material and number of helicopter sorties required to move the unit. Rigging procedures for common equipment are found in FM 55-450-4/FMFRP 5-31, VOL II/NWP 42-1, VOL I/AFR 50-16, VOL I/COMDTINST M13482.3 and FM 55-450-5/FMFRP 5-31, VOL III/NWP 42-1, VOL III/AFR 50-16, VOL III/COMDTINST M13482.4 (see Preface). The unit SOP should contain rigging and loading plans to assist the ground crew and reduce confusion at a time when speed and control are needed. Army units must requisition the required number of sling sets and cargo nets to move unit equipment.

## 1-8. COORDINATION

As plans are being finalized, the information is provided to the aviation unit. The liaison officers from the supported, aviation, and receiving units must agree that the mission is supportable prior to execution.

## 1-9. TRAINING

Proper training of personnel involved in sling load operations is essential in maintaining an adequate level of proficiency and knowledge, especially in the areas of safety, rigging, and sling load inspection.

**a. Training Responsibility.** Unit commanders are responsible for training their personnel and determining the level of proficiency for those personnel involved in sling load operations. Appendix J provides a recommended list of types and hours of sling load training. A Training Support Package (TSP) is available from the Quartermaster Center and School at the Army address on page ii.

**NOTE: Sling load training must be conducted by sling load inspector qualified personnel (see Appendix I).**

**b. Training Objectives.** All personnel involved in

the operation must be thoroughly familiar with the following training objectives:

**(1)** Identify inspection procedures and fill-in inspection forms.

**(2)** Determine and identify lifting devices (for example, slings, nets, and pendants).

**(3)** Operate and maintain slings and other lifting devices.

**(4)** Conduct rigging procedures for sling loads.

**(5)** Determine helicopter capabilities for sling load operations (see Chapter 2).

**(6)** Perform hookup procedures.

**(7)** Identify hazards and safety procedures.

**(8)** Develope load plans for sling load operations.

**(9)** Perform ground crew tasks and responsibilities.

**(10)** Perform signalmen's duties and responsibilities.

**(11)** Perform standard hand-and-arm signals (see Appendix A).

**(12)** Conduct proper radio procedures and communications security, as required.

**(13)** Conduct shipboard operations, as required.

**(14)** Determine and identify safety equipment and procedures.

**c. Communications Security (COMSEC).** Radio security is an important part of ground crew training. In a hostile area, the safety of both the helicopter and ground crew is at risk if the enemy determines your position.

## 1-10. OPERATIONAL RISK MANAGEMENT

Beginning in the planning cycle, a risk management program must be implemented to determine safety risks and considerations in order to conduct smooth, safe sling load operations.

**a. Risk and Accidents**. Risk is defined as an expected/estimated loss, danger or peril, due to or resulting from a hazard. Risk is expressed in terms of hazard severity and probability; the consequences (loss or injury) of an accident. Historically and in general, accidents have taken a heavy toll of U.S. Army resources. Current experience indicates that projection of accident losses using relevant historical records, especially for wartime scenario, the impact of equipment/personnel losses and accident costs will be significantly greater in future operations. These losses are a measurement of loss of combat effectiveness and fighting potential of a force. A definite cause to 80 percent of all Army accidents, ground and air, in military and civilian operations, has been determined to be by human error. Material/system failure or inadequate precautions for environmental factors account for additional accidental mishaps.

**b. Risk Management**. Risk management approach reduces losses in both combat and training consistent with objectives of mission, operation, training, collective/individual tasks employed, and system(s) used by building safety into these activities. Consequently, risk management is defined as the process of making “high” risk operations safer by eliminating or reducing risks while retaining overall mission benefit. Formal risk management process encompasses the following actions:

**(1)** Identify the risks in unit mission, collective and individual tasks, and routine unit activities that point to accidental potential.

**(2)** Assess the risk associated with each hazard. Develop, review, and assess alternative techniques, practices, procedures, or plans which allow mission accomplishment while minimizing accidental risk.

**(3)** Make decisions and develop control measures. Select and implement the techniques, procedures, or plan most likely to eliminate unnecessary accident risks while accomplishing the unit mission, collective and individual tasks, or operation in question.

**(4)** Make safety and the use of risk control proce-

dures standard practice by executing the following acts:

**(a)** Stress the ties between leadership responsibilities/awareness and safety. Each member of the chain of command must keep in mind that the overall purpose of unit safety is to keep soldiers free from injury.

**(b)** Embed risk control measures in unit SOPs, training, job aids, etc..

**(c)** Conduct all training to standard. Safe performance is a result of training to standard. Failure to train to standard or to enforce standards is the cause of many human-error-related accidents.

**(d)** Supervise. All leaders in the chain of command down to the individual soldier responsibility are to advise on safety matters which may effect soldiers and equipment in accomplishing the mission. Use the "Tough Caring" approach to safety enforcement by incorporating safety and risk control techniques into After Action Reviews and, then, incorporate any safety lessons learned into SOPs, training, and future operations.

**c. Risk Management for Sling Load Operations** . There are numerous hazards and the potential for accidents inherent to sling load operations and procedures for conducting those operations. For example, the risk of static discharge increases when the operating distance between the aircraft and the sling load is extremely small. As a risk-reducing control measure, the use of a reach pendant (instead of a static discharge wand) would increase the safety margin, assist in ease of hook-up (decreasing the time the aircraft and hook-up crew are close), and decrease the number of personnel required for hook-up.

# CHAPTER 2

# AIRCRAFT CARGO HOOK SYSTEMS

## 2-1. INTRODUCTION

Helicopters rapidly move troops and supplies where they are needed. They can aerial deliver cargo inside the aircraft or below the aircraft suspended from the cargo hook. This chapter covers capabilities, limitations, and characteristics of the utility and cargo helicopters that are capable of sling load operations.

## 2-2. DEFINING CARGO HOOK SYSTEMS

Cargo hooks are attached to the bottom of the aircraft and are opened manually and/or electrically by the aircrew or, in an emergency, manually by the ground crew. During hookup, the cargo sling or cargo net apex fitting/web ring is attached directly to the cargo hook. The spring-loaded keeper prevents the apex fitting/web ring from slipping off the load beam/cargo hook. Descriptions of the types of hookups are as follows:

- Single-point rigged loads are connected to a cargo hook on the bottom of the helicopter.

- Normally, dual-point loads are connected to the forward and aft cargo hooks.

- Multiple-point loads are connected to three or more attachment points or cargo hooks.

## 2-3. CARGO HOOK CROSS DESIGNATION

Natick Research, Development, and Engineering Center (NRDEC) has indicated that any single point sling load certified under a specific aircraft is also certified for any aircraft with suitable lift capability.

**CAUTION**
**This certification is limited to single-point loads only.**

**a. Lifting Capability.** The load must be within the lifting capability of the desired helicopter model and not exceed the rated capacity of the sling set being used.

**b. Rigging Procedure.** The load shall be rigged in accordance with the certified rigging procedure.

**c. Airspeed.** The recommended stable airspeed is specified for the load in the applicability section of the rigging procedure.

**WARNING**

**When working below a helicopter, do not exit to the rear of the aircraft because the tail rotor or tail boom may descend low enough to strike personnel causing injury or death.**

## 2-4. HELICOPTER PENDANT SYSTEMS (USMC, USN)

The cargo sling or net apex fitting can be connected directly to the cargo hook or to a releasable swivel hook pendant sling assembly, commonly called a pendant (Figure 2-1). Pendants provide greater clearance between the helicopter and the load. Load hookup is faster and the added clearance provides more protection to the hookup team. Some helicopters use pendants that are specifically designed for that aircraft. Those types of pendants are discussed in the section dealing with that helicopter.

## 2-5. RELEASABLE SWIVEL HOOK PENDANT SLING

The Marine Corps/Navy AC6000500 Mod-1 pendant is attached to the helicopter cargo hook system and suspended under the helicopter. The swivel prevents the load lifting sling from wrapping up if the load twists. The pendant is 8 feet long and weighs about 53 pounds.

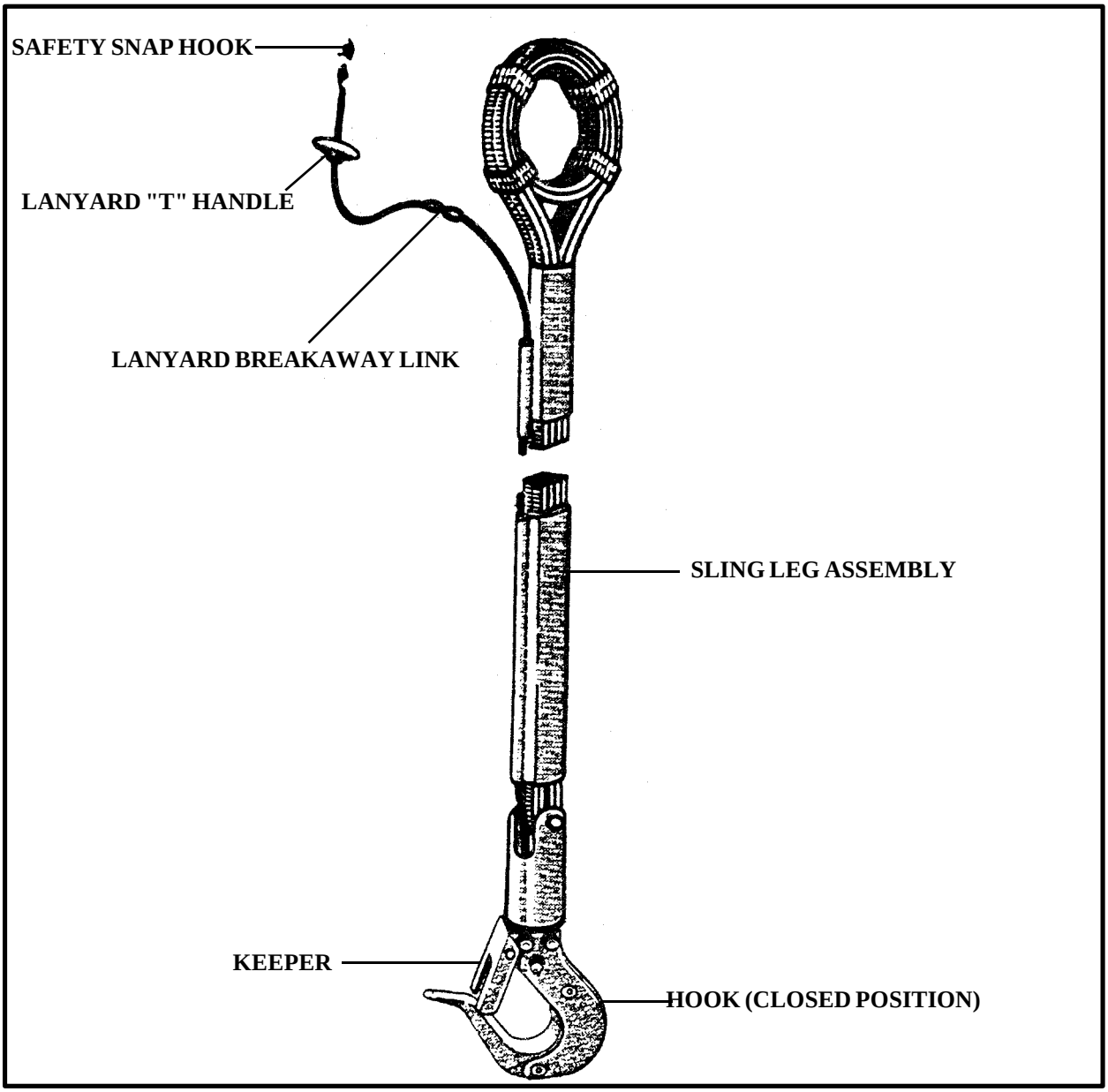


*Figure 2-1. Releasable Swivel Hook Pendant Sling (AC 6000500 Mod-1)*

The pendant is 8 feet long and weighs about 53 pounds. The safe working load capacity of the pendant during sling load operations is 12,000 pounds. The aviation unit will provide the pendant.

**NOTE: The pendant cargo hook cannot be opened electrically. The aircrew opens the hook by pulling on the lanyard inside the aircraft. The ground crew must relatch the cargo hook each time the hook is opened.**

## 2-6. HELICOPTER CARGO HOOK SYSTEMS

Helicopter cargo hooks have maximum rated capacities which are shown in this paragraph. Several factors affect a helicopter's lifting capability (see paragraph 1-3).

**NOTE: Contact the supporting aviation unit to obtain accurate sling load weights for the aircraft being used.**

Table 2-1 identifies the helicopter and its corresponding cargo hook system. In the cases where the mission symbol is not given, the information applies to all the models of that particular helicopter design number. For example, H-53E information applies to all helicopters with that design and model designation.

**Table 2-1. Helicopter Cargo Hook Systems**

| HELICOPTER | HOOK SYSTEMS |
|---|---|
| UH-1 | Single-point |
| SH-2 | Single-point |
| H-3, SH-3G, HH-3F | Single-point |
| CH-46 | Single-point |
| H-47 | Single-, Dual-, or Multiple-point |
| H-53 | Single-point |
| H-53E | Single- or Dual-point |
| H-60 | Single-point |
| H-65A | Single-point |

**a. UH-1.** The UH-lH/P is a single engine, single main rotor helicopter (Figure 2-2) manufactured by Bell Helicopter Textron. The UH-LN is a twin engine version. The UH-1 is a general-purpose aircraft that has a limited cargo-carrying capability. It is used for such missions as aerial delivering troops, cargo, and injured personnel.

**(1)** The UH-lH/P and UH-LN cargo hook maximum capacity is 4,000 pounds and 5,000 pounds respectively. The cargo hook is suspended in a well in the belly of the aircraft directly below the main rotor system (Figure 2-3). The AC6000500 pendant can be used with this cargo hook (USMC, USN).

**(2)** The UH-1 does not have an opening in the cabin floor for the crewman to easily see the cargo hook and monitor the load. Therefore, the ground signalman is very important during the load hookup. The ground crew must pay close attention because the cargo hook and skids of the UH-1 are close together and can restrict the movement of the ground crew.

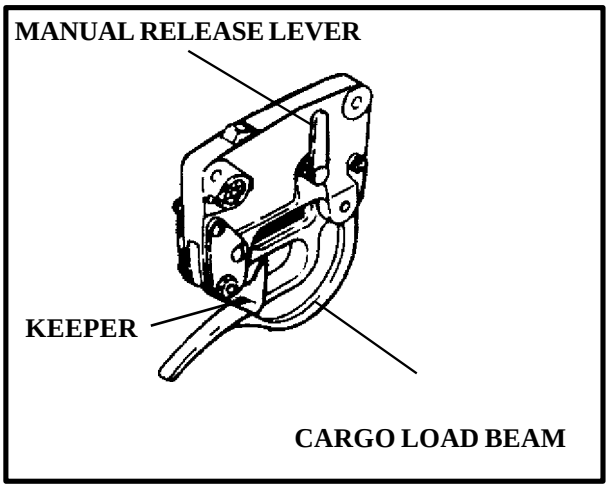


*Figure 2-3. UH-1 Cargo Hook*

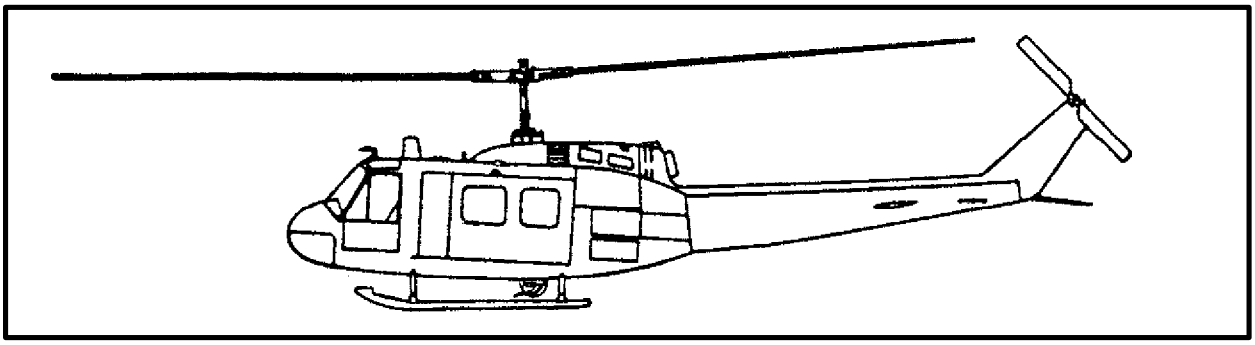

*Figure 2-2. UH-1 Iroquois (Huey)*

**(3)** The cargo hook is normally opened electrically or manually by the aircrew. A manual release lever is located on the left side of the cargo hook. In an emergency, the ground crew can move the lever aft and the cargo hook will open.

**(4)** Due to the unique shear pin design of the cargo hook, a nylon donut/web ring must be used when sling loading. Do not attach the sling set metal apex fitting directly to the cargo hook.

**b. SH-2F.** The SH-2F Sea Sprite is a twin engine, single main rotor helicopter (Figure 2-4) manufactured by Kaman Aerospace Corporation. The cargo hook maximum capacity is 4,000 pounds and is mounted under the fuselage aft of the main landing gear (Figure 2-5). The cargo hook has a small throat opening between the load beam and keeper. Some sling equipment is too large to fit on the cargo hook. Coordinate with SH-2 unit to make sure your sling equipment will fit on the cargo hook.The cargo hook is normally opened electrically or manually by the aircrew. A manual release lever is located on the left side of the cargo hook. In an emergency, the ground crew can move the lever aft to open the cargo hook.

**c. H-3, SH-3G, and HH-3F.** The SH-3G Sea King, HH-3F Pelican (Figure 2-6), and H-3 Jolly Green Giant are twin engine, single main rotor helicopters manufactured by Sikorsky Aircraft. The H-3 helicopter models have two different cargo hook systems: the cable-suspended cargo sling system, rated at 6,000-pound capacity; and the low response cargo sling system, rated at 8,000-pound capacity.

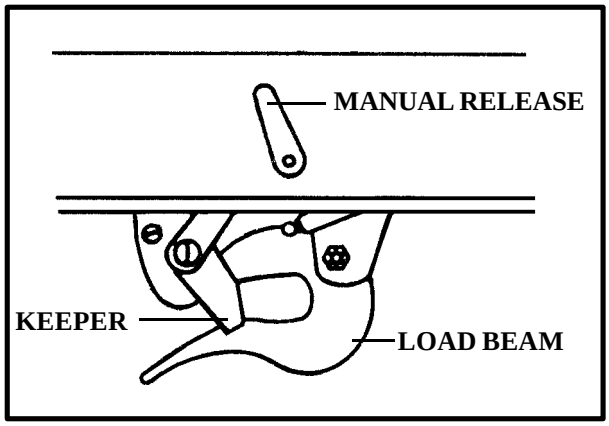


*Figure 2-5. SH-2F Cargo Hook*

**(1)** The cargo hooks are the same but are mounted differently to the aircraft. Four cables extend from the fuselage attaching points to the cargo hook in the cable suspended system (Figure 2-7).

**(2)** In the low response system (Figure 2-8), the cargo hook is attached to a suspension frame through cables and pulleys.

**(3)** Both cargo hooks (Figure 2-9) are normally opened manually or electrically by the aircrew. A manual release lever is located on the right side of the cargo hook. In an emergency, the ground crew can move the lever aft to open the cargo hook. If the manual release lever should fail to open the cargo hook, do not use the cargo hook.

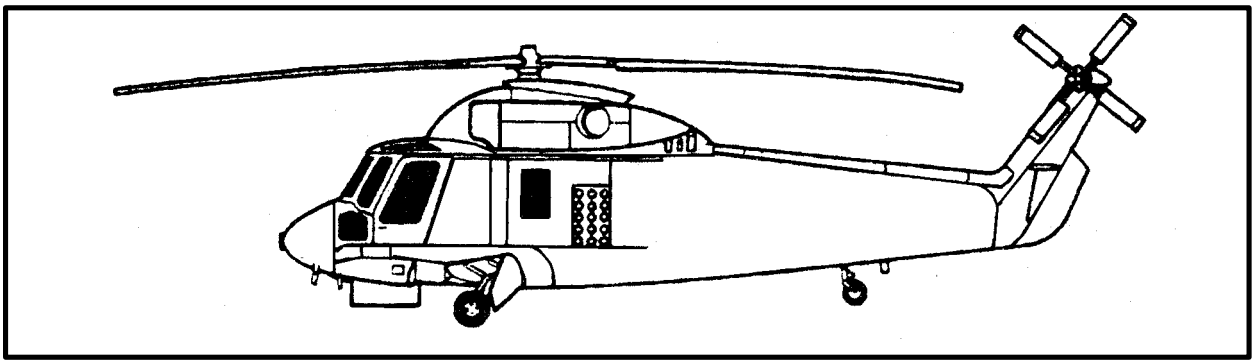

*Figure 2-4. SH-2F Sea Sprite*

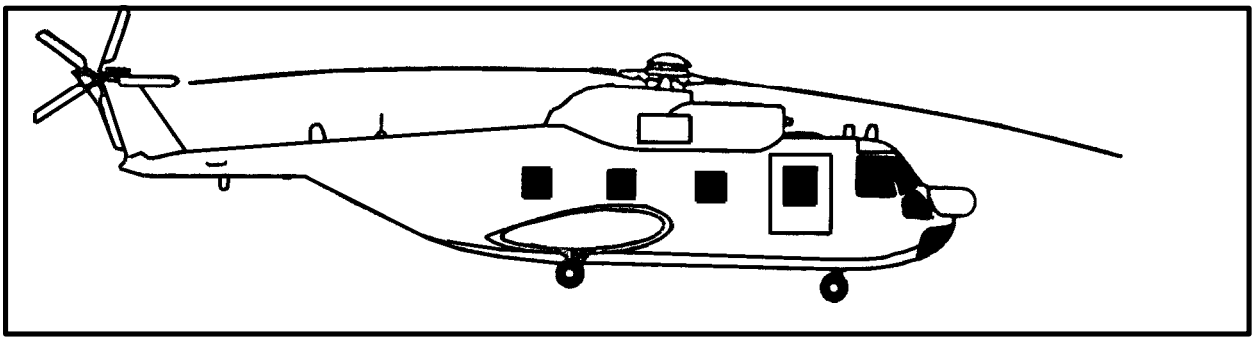

*Figure 2-6. HH-3F Pelican*

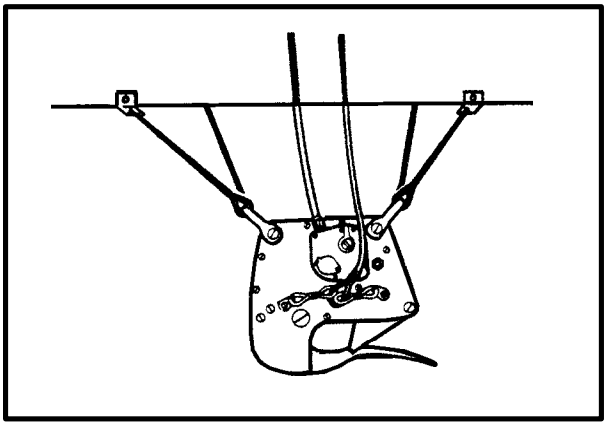

*Figure 2-7. Cable Suspended System*

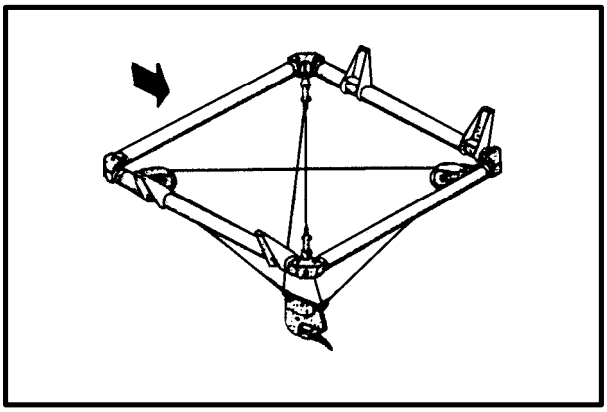

*Figure 2-8. Low Response System*

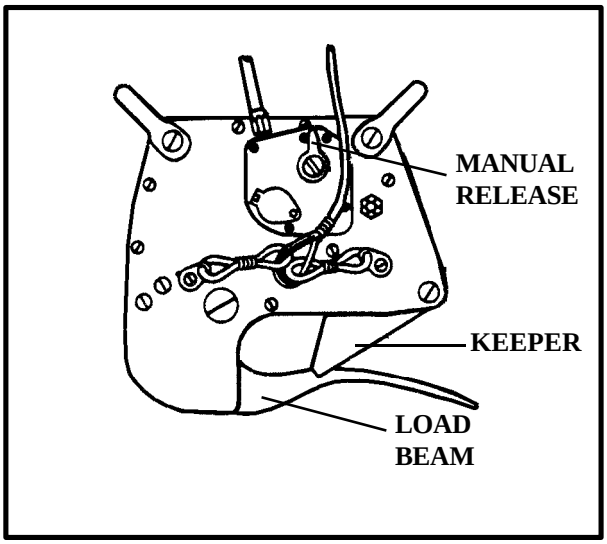


*Figure 2-9. H-3 Cargo Hook System*

**d. CH-46A/D/E.** The CH-46A/D/E Sea Knight (Figure 2-10) is a twin engine, tandem rotor helicopter manufactured by the Boeing Vertol Company. The primary mission of the CH-46 is to rapidly aerial deliver combat troops, support equipment, and supplies, and perform vertical replenishment (VERTREP). The cargo hook maximum capacity is 10,000 pounds (Figure 2-11). The AC6000500 Mod-1 pendant may be used with this helicopter. The cargo hook is normally opened electrically or manually by the aircrew. The manual release cable is mounted on top of the cargo hook and is only accessible to the aircrew.

**e. H-47.** The H-47 Chinook (Figure 2-12) is a twin engine, tandem rotor helicopter manufactured by the Boeing Vertol Company. The primary mission of the Chinook is to aerial deliver personnel, supplies, and equipment. The flight engineer lays on the floor and guides the pilot by giving him directions to help him position the aircraft directly over the load.

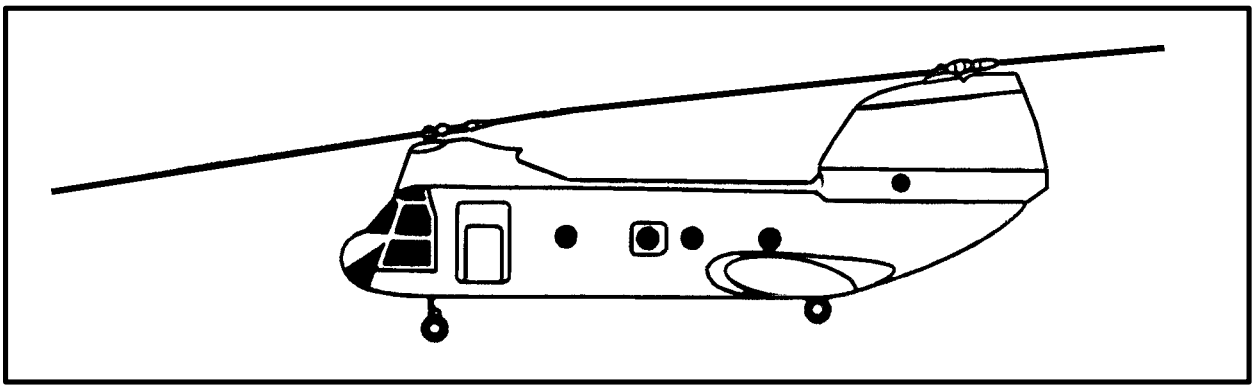

*Figure 2-10. CH-46 Sea Knight*

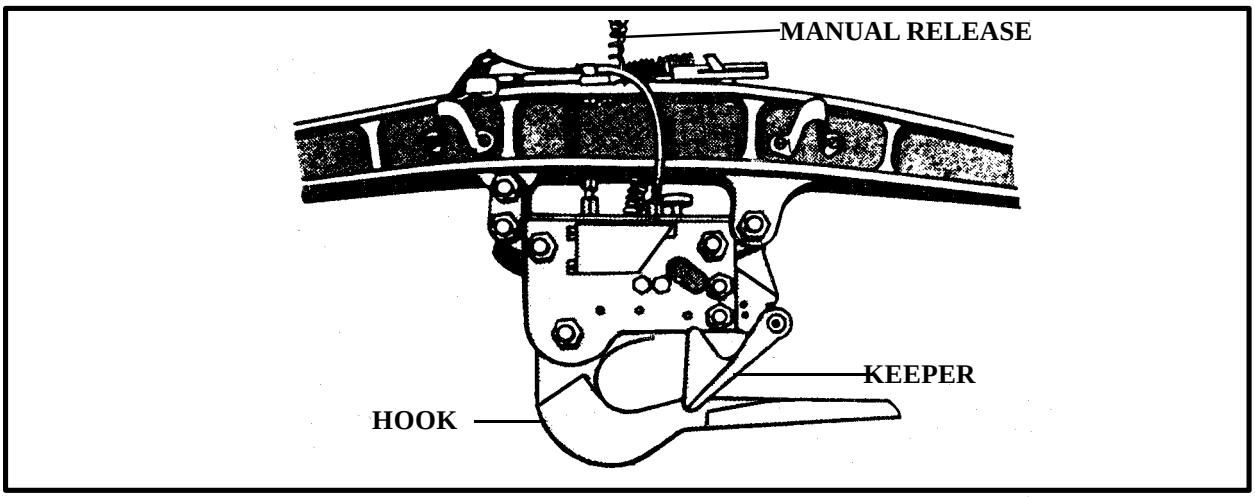


*Figure 2-11. CH-46 Cargo Hook System*

**(1)** The H-47's center cargo hook and two additional cargo hooks (Figure 2-13) increase sling load capacity and stability. The two additional cargo hooks, designated as the forward and aft cargo hooks, are bolted to the bottom of the aircraft about 6 1/2 feet fore and aft of the center (main) cargo hook.

**(2)** The center cargo hook maximum capacity is 26,000 pounds and is attached to an I-beam mounted in an opening in the floor (Figure 2-14). The aircrew can open the cargo hook electrically or manually. The manual release is not accessible to the ground crew; therefore, the ground crew must manually depress the spring-loaded keeper and remove the apex fitting from the cargo hook.

**(3)** The forward and aft cargo hook (Figure 2-15) maximum capacity when used to carry individual single-point loads is 17,000 pounds; however, loads that weigh 7,000 to 10,000 pounds are normally carried on the center cargo hook. Normally, the two hooks are used together to carry a dual-point (tandem) load and the maximum load weight capacity is 25,000 pounds. The aircrew can open the forward or aft cargo hook electrically or manually from inside the aircraft. A manual release knob is located on the right-hand side of either cargo hook. In an emergency, the ground crew can rotate the manual release knob counterclockwise to open the cargo hook.

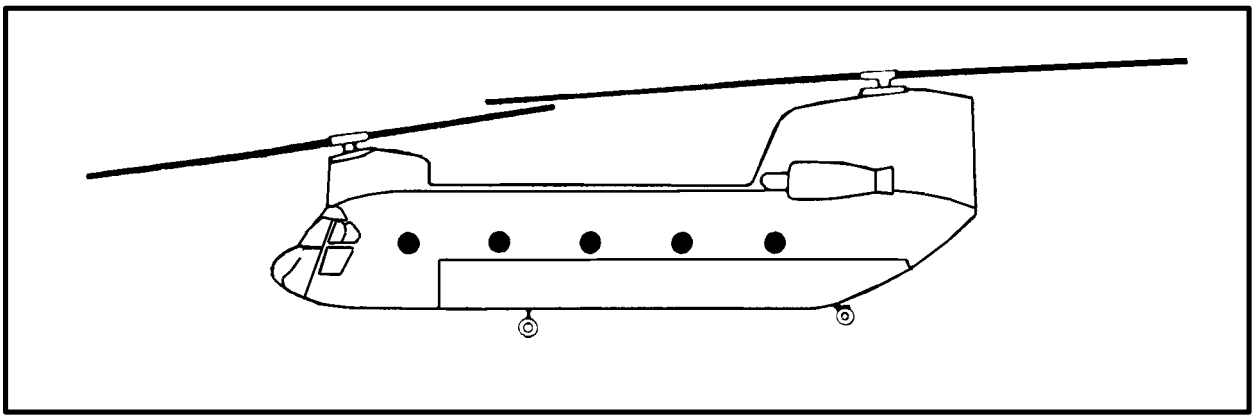

*Figure 2-12. H-47 Chinook*

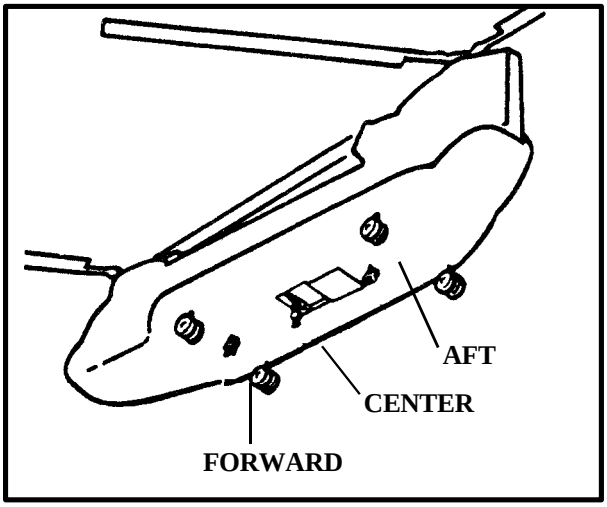


*Figure 2-13. H-47 Cargo Hook Locations*

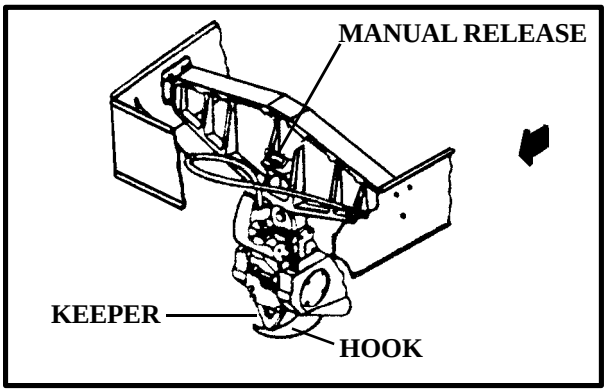


*Figure 2-14. H-47 Center Cargo Hook*

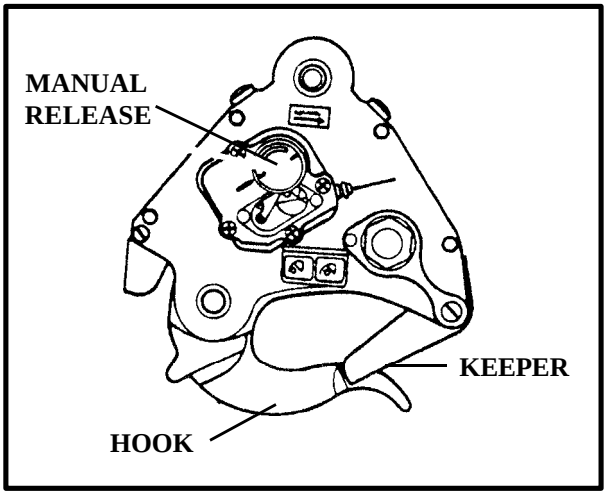


*Figure 2-15. H-47 Forward and Aft Cargo Hooks*

**(4)** The additional cargo hooks were added to increase load stability during flight when moving large bulky cargo such as communications shelters and vehicles. However, you can use all three hooks to carry three individual loads with one load connected to each hook, such as cargo nets, fuel drums, or A-22 cargo bags. The heaviest load should be connected to the center hook, the next heaviest connected to the forward hook, and the lightest load to the aft hook. If only two separate loads are lifted, connect the heavier load to the forward cargo hook and the lighter load to the aft hook. These guidelines will help keep the aircraft center of balance within allowable limits. Remember, do not exceed the overall capacity of the aircraft. The aircrew is the final authority in determining which load is connected to what

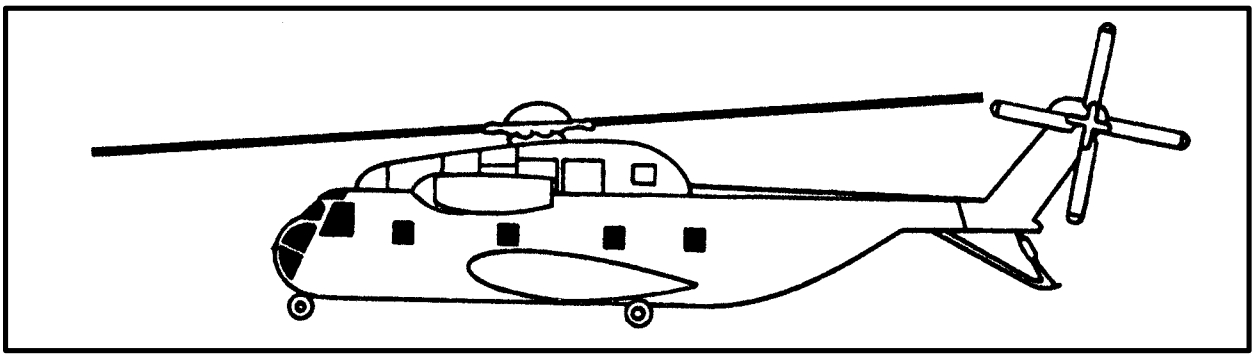

*Figure 2-16. H-53A/D Stallion*

cargo hook. During night operations, be certain the correct hook is engaged because it is very easy to engage the wrong hook.

**f. H-53.** The H-53 Stallion (Figure 2-16) is a twin engine, single main rotor helicopter produced by Sikorsky Aircraft. Its primary mission is to either aerial deliver supplies and equipment or conduct airborne mine countermeasures (mine sweeping). The maximum capacity of the single cargo hook is 20,000 pounds (Figure 2-17). The cargo hook is suspended from an opening in the floor. The AC6000500 Mod-1 pendant system can be used with this aircraft. The aircrew can open the cargo hook electrically or manually. A manual release knob is located on the right side of the hook. In an emergency, the ground crew can rotate the manual release knob clockwise to open the cargo hook, if directed by the aircrew. If the manual release knob fails to open the cargo hook, the hook is not usable and another aircraft must be used to lift the load.

**g. H-53E.** The triple engine H-53E Super Stallion (Figure 2-18) is a growth variant of the CH-53D. Its

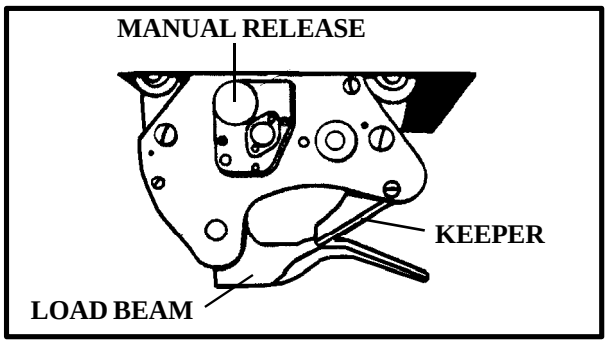


*Figure 2-17. H-53 Cargo Hook System*

primary mission is either vertical on board delivery, airborne mine countermeasures or aerial delivering supplies and equipment.

**(1)** The center cargo hook, suspended on the end of a pendant below the fuselage near the centerline, is used for single-point loads (Figure 2-19). Even though the hook capacity is greater, the aircraft maximum lift capacity is 32,000 pounds. The aircrew can open the cargo hook manually or electrically. A manual release knob

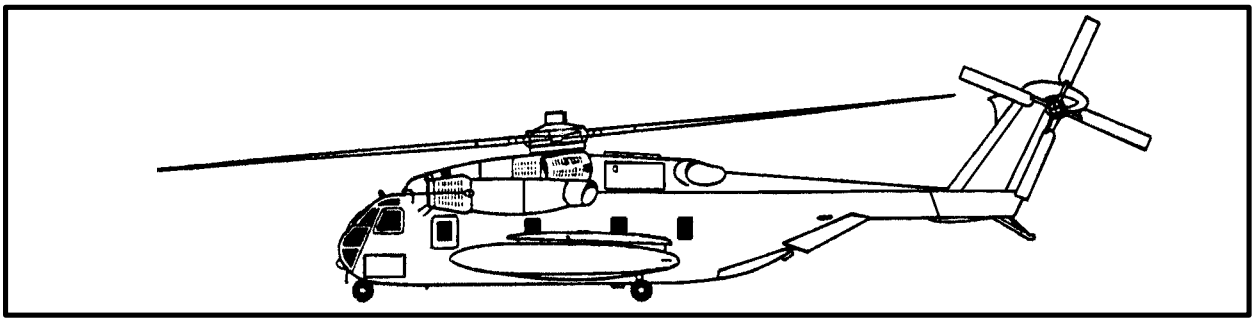

*Figure 2-18. H-53E Super Stallion*

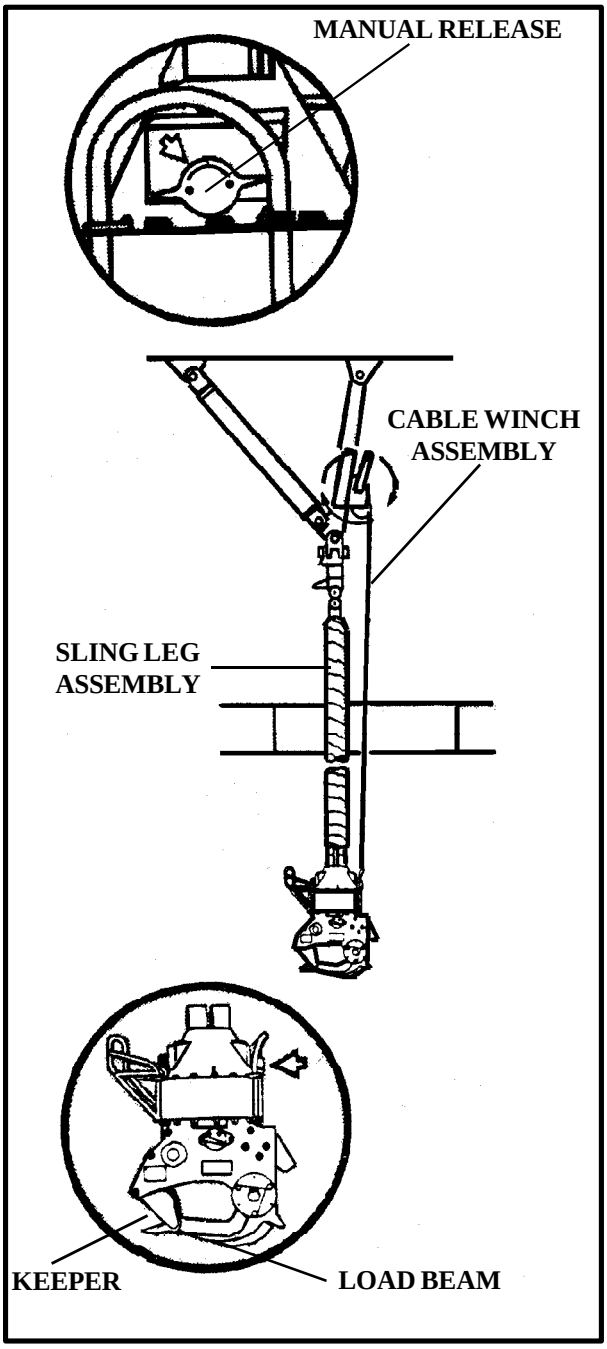


*Figure 2-19. H-53E Center Cargo Hook*

is located on a side of the top part of the hook. In an emergency, a ground crewman can open the cargo hook by rotating the knob clockwise.

**(2)** A dual-point suspension system, similar to the CH-47D, uses a forward and aft cargo hook (Figure 2-20). These two cargo hooks, located 10 feet apart, must be used for dual-point loads. The aircraft maximum lift capacity when carrying a dual-point load is 32,000 pounds with a maximum of 60 percent of the sling load on either the forward or aft hook. A pendant specifically designed for the H-53E is used with the dual-point system to provide additional clearance between the helicopter and the hookup team. The aircrew can open the forward or aft cargo hook electrically or manually. A manual release lever is located on the left side of the cargo hook. In an emergency, the ground crew can open the hook by moving the manual release lever up.

**(3)** The pendant cargo hook is not opened electrically. The aircrew member opens the pendant cargo hook by pulling on the lanyard inside the aircraft. The ground crew can rotate the manual release knob on the side of the cargo hook to open the hook. The ground crew must also relatch the pendant cargo hook after it is opened each time.

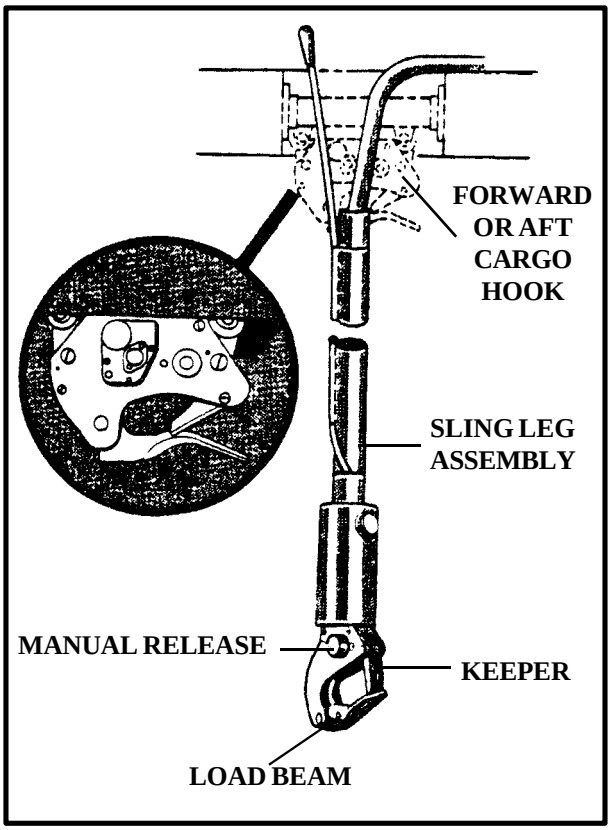


*Figure 2-20. H-53E Forward and Aft Cargo Hooks*

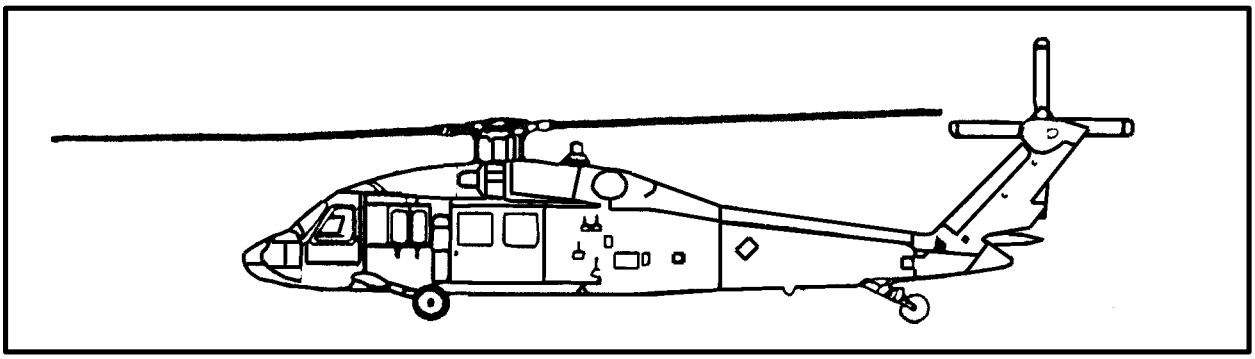

*Figure 2-21. H60 Blackhawk*

**h. H-60 Blackhawk.** The H-60 (Figure 2-21) is a twin engine, single main rotor helicopter manufactured by Sikorsky Aircraft. Its primary mission is to aerial deliver personnel, supplies, and equipment or perform antisubmarine warfare duties.

**(1)** The Army UH-60A cargo hook has a maximum load capacity of 8,000 pounds. The Army UH-60L and USAF MH-60G cargo hook has a maximum load capacity of 9,000 pounds.The cargo hook load capacity of the Navy version, SH-60B, is 4,000 pounds. The cargo hook capacity of the Navy HH-60H and Coast Guard HH-60J is 6,000 pounds. The cargo hook (Figure 2-22) is mounted in an opening inthe floor of the aircraft just aft of the main rotor. The aircrew can open the hook electrically or manually. A manual release knob or lever is located on the right side of the cargo hook. In an emergency, the ground crewman or aircrew member can rotate the knob or lever counterclockwise and open the cargo hook.

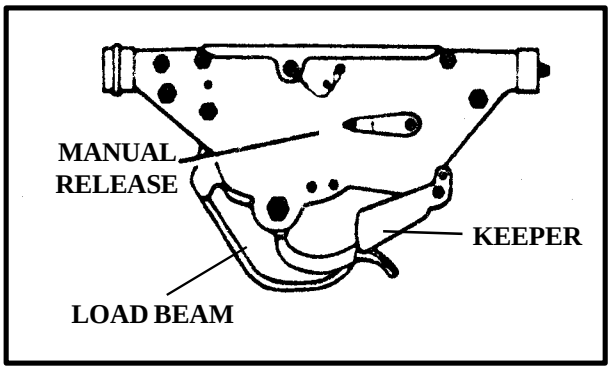


*Figure 2-22. H-60 Cargo Hook System*

**(2)** The apex fitting spacer must be used when transporting loads rigged with the 10,000-pound capacity sling set. If the apex fitting pin spacer is not installed, the pin can oscillate under and lift the cargo hook keeper and the apex fitting can slide off the cargo hook. Remove the spacer on the 25,000-pound capacity sling set because it will not fit in the cargo hook opening and the pin is too big to oscillate under and lift the cargo hook keeper.

**(3)** (USA) Do not use a nylon donut to connect loads to the UH-60 helicopter. The donut can twist up on the load beam of the hook and prevent jettison of the load in case of an emergency.

**i. HH-65A.** The HH-65A Dolphin (Figure 2-23) is a twin engine, single main rotor helicopter manufactured by Aerospatiale Helicopter Corporation. The primary mission of the HH-65A is search and rescue, but it also has a limited utility capability.

**(1)** The flight mechanic stands at the right door of the cabin to direct the pilot over the load. The ground crew should approach and depart the helicopter from the right so the flight mechanic can monitor their position.

**(2)** The cargo hook (Figure 2-24), rated at 2,000-pound capacity, is mounted on the underside of the helicopter directly below the main rotor. The aircrew can open the cargo hook electrically or manually. A manual release knob is located on the right-hand side of the hook. In an emergency, the ground crew can rotate the manual release knob clockwise to open the cargo hook.

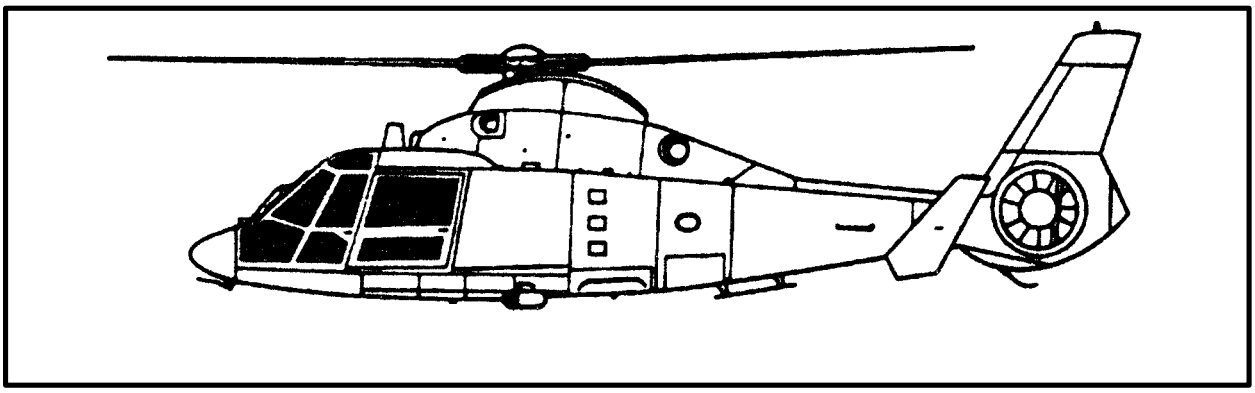

*Figure 2-23. H-65A Dolphin*

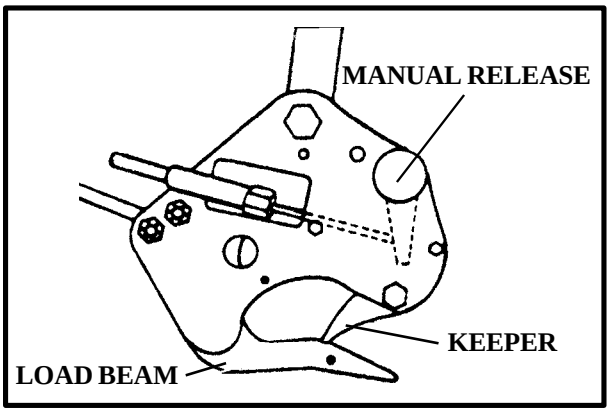


*Figure 2-24. HH-65A Cargo Hook System*

# CHAPTER 3

# PERSONNEL, SUPPORT EQUIPMENT, AND PROTECTION PROCEDURES

## 3-1. INTRODUCTION

Current concepts for our armed forces require a highly mobile logistical support structure to maintain our fast-moving fighting forces. As such, units will be involved in helicopter support operations. Some units will be moved while others will be resupplied by helicopters. Ground crew teamwork and proficiency are very important to the success of a sling load operation. How well ground crew personnel are trained and how familiar they are with their equipment may determine the final outcome of the mission. All units should have an ongoing sling load training program to keep their ground crews current on unit equipment and to train new ground crew personnel. The implementation of a ground crew training program is a command responsibility. This chapter discusses the ground crew, their equipment, and responsibilities.

## 3-2. GROUND CREW

Ground crew teams are classified by their locations: the hookup team at the supported unit landing site and the receiving team at the receiving unit landing site.

**a. The Hookup Team.** The hookup team consists of a minimum of either four (USMC, USN) or three persons (USA, USAF, USCG). The team is made up of the signalman, static wand person, and the hookup man. The USMC and USN hookup team also has a team supervisor as the fourth person. Aboard ship, the landing signal officer/enlisted (LSO/LSE) will perform the duties of the signalman. Additional hookup men are required when using dual and multiple-hook aircraft, such as the CH-47D and H-53E. The H-53E requires a separate static wand person for each cargo hook, while the CH-47D requires only a single static wand person.

**b. The Receiving Team.** The receiving team consists of a signalman to direct the placement of the load, a hookup man familiar with manual release procedures, and when required, a static wand person. The hookup man and static wand person are necessary if they have to manually open the cargo hook.

**c. The Helicopter Support Team (HST).** Helicopter support teams are the primary source of ground support for the Marine Corps, but selected Marine unit members should be trained as ground crew personnel in case the HST is not available.

**d. Responsibilities.** Since the unit owning the equipment is responsible for properly rigging the equipment and using correct procedures during the sling load operation, the ground crew must be thoroughly trained in the complete operation. Ground crew duties include the following:

**(1)** Clear the landing site.

**(2)** Rig and derig the loads.

**(3)** Direct the aircraft over the load for hookup and over the landing point for load release.

**(4)** Hook up the load to the cargo hook.

**NOTE: Large items of equipment may require more than three people to prepare, rig, and hook them up to the helicopter. Although each crew member has specific duties during the operation, each person should be trained to perform all duties.**

**e. Safety Considerations.** Ground crew personnel must be careful and alert at all times while working near operating aircraft because the hazards found in operating under a hovering helicopter are not always apparent. Only trained crews should be used to rig loads and hook them to the aircraft. The following safety considerations are provided to minimize the chances of injury during a hookup operation. They should be read, practiced, and

included in the unit's applicable training program.

**(1)** Avoid flying debris and foreign object damage.

**(2)** Avoid cargo sling leg entanglement.

**(3)** Avoid sharp objects protruding from loads or aircraft.

**(4)** Avoid top-heavy or unbalanced loads.

**(5)** Avoid being caught between the load and the aircraft.

**(6)** Always watch the aircraft and be ready to quickly move out of the way in the event the helicopter has an emergency.

**(7)** Avoid moving and protruding parts of the aircraft such as main rotor blades, tail rotor blades, landing gear, and cargo hooks.

**(8)** Stay clear of swinging cargo hooks and cargo.

**(9)** Avoid tripping over static discharge wand grounding cable.

**(10)** Be alert for vehicles without brakes, with faulty brakes, or brakes not engaged.

**(11)** Be alert for loads with damaged lifting provisions.

**(12)** Take special care on slippery and wet surfaces, pitching decks, and in high winds.

**(13)** Wear all required safety equipment.

**(14)** Be aware of procedures being performed; know what you are doing.

**(15)** Use static discharge wand as required.

**(16)** Be aware of obstacles on the ground or deck that may cause you to fall.

**(17)** Keep an eye on your fellow crew members; their safety is important.

**(18)** Double check the load for proper rigging and sling attachment.

**(19)** Do not participate in or allow horseplay.

**(20)** Know your position in relation to the helicopter(s) at all times, especially during shipboard operations.

**(21)** Watch movement of the aircraft and signals from the aircrew in case of an emergency. Remember, you will be under it!

**(22)** Follow established emergency procedures. Be alert for signals from the signalman in case of an emergency.

**(23)** Make sure brakes or chock blocks are engaged or installed as required.

**(24)** Keep the area clear of loose equipment which could damage the aircraft or injure personnel.

**(25)** Remain clear of the hookup area unless you are participating.

**(26)** (USA) Know where the rendezvous point is in case of an emergency.

**f. Team Supervisor Safety Considerations.** The team supervisor has specific safety related duties. He must perform the following actions:

**(1)** Inspect sling equipment for serviceability.

**(2)** Establish and maintain radio communications with the aircrew, if applicable.

**(3)** Appoint a signalman to give hand-and-arm signals to the aircrew.

**(4)** Conduct a safety briefing with the aircrew, if the situation permits.

**(5)** Make sure all ground crew/HST personnel have the proper protective equipment.

**(6)** (USMC, USN) Make sure static wand persons and hookup men wear electrician/lineman gloves.

**(7)** (USA, USAF, USCG) Make sure hookup men wear leather gloves.

**(8)** Abort the operation if conditions are present that would injure personnel or cause a safety hazard. Inform the aircrew if time permits.

**(9)** Brief ground crew/HST on safety hazards and make sure that proper safety procedures are followed.

## 3-3. PREPARING FOR THE OPERATION

The unit commander must provide local security for the operation (this task is not the responsibility of the ground crew). Once the commander has designated the areas to be used for sling load operations, ground crew personnel clear the zone and set up markings to identify the area from the air.

**a. Inspection.** Before the operation starts, the ground crew must make sure that the cargo to be transported has been correctly prepared, rigged, and inspected for sling load movement. All loads must be inspected before rigging. Give special attention to the lifting points. Bolts and retention pins in lifting shackles must be serviceable and properly installed. Equipment with unauthorized repairs or improper replacement parts on lifting provisions are unsafe to sling load. Equipment could be damaged if it is not prepared and rigged properly.

**b. Breakaway Safety Ties.** Breakaway taping is used to hold lines and sling legs in place before the aircraft arrives in the pickup area. The tape temporarily holds the legs in place and prevents them from entangling or wrapping aroundprojecting items, mirrors, exhaust stacks, or steering wheels during hookup and lift-off. When the aircraft puts pressure on the lifting legs, the tape pulls off or breaks away from the place where it was taped.

## 3-4. HOOKUP TEAM RESPONSIBILITIES

For more detailed instructions for each member, see Chapter 5.

**a. Team Supervisor (USMC/USN Only).** The team supervisor is responsible for overall team coordination, equipment, logistic support, communications, and safety. (Appendixes E and F have checklists to assist him.) To accomplish coordination, he:

**(1)** Coordinates with the supported unit to determine type of mission, location of the cargo, and equipment required to conduct the operation.

**(2)** Establishes liaison with the aviation unit to include a preoperation briefing.

**(3)** Organizes and assigns duties to each ground crew member based on the mission.

**(4)** Directs and supervises the ground crew in preparing and inspecting all HST equipment.

**(5)** Ensures that ground crew personnel are properly equipped with individual safety equipment.

**(6)** Directs and supervises all rigging and derigging operations.

**(7)** Establishes and maintains communications with the aircraft commander at all times throughout the operation.

**(8)** Organizes the landing site to include avenues of approach and exit; establishes staging areas (vehicles and cargo) and marshaling areas (personnel); and selects landing points within the landing site.

**(9)** Supervises all operations within the landing site.

**b. Signalman.** For USMC HST operations, the outside director is referred to in this manual as the signalman.

**(1)** The signalman initially identifies the load to be lifted and provides hand-and-arm signals to the pilot to position the aircraft over the load. As the helicopter approaches the load, the signalman moves to a position approximately 45 degrees off the nose of the aircraft.

**(2)** The signalman moves with the aircraft to make sure that the pilot can see the signals. The signals must be precisely given to prevent any misunderstandings between the signalman and the pilot. (Hand-and-arm signals are explained in Appendix A.) The pilot uses an

aircrew member for primary directions when the aircraft is over the load. The signalman is used as an additional reference. The signalman clears the aircraft for departure once the load is off the ground. He maintains a continuous watch for other aircraft entering the landing site area or vehicles that may affect the safety of the operation.

**c. Inside Signalman (If Required) (USMC HST Ashore Only).** The inside signalman is especially important when conditions make it difficult for the signalman to see the hookup crew and load. The inside signalman assists in properly positioning the aircraft over the load. He positions himself to best observe the aircraft cargo hook in relation to the load and uses hand-and-arm signals which are relayed by the signalman to the aircraft crew.

**d. Static Wand Person.** The static wand person must be thoroughly familiar with the effects of static electricity. He provides the primary protection against severe electrical shock for the hookup/manual release crew by touching the static discharge wand to the cargo hook and maintaining contact until the hookup/manual release crew clears the load.

**e. Hookup Man.** The hookup man positions himself on or near the load in a stable position and attaches the sling or net apex fitting to the cargo hook. If required, he performs the manual release of the cargo hook.

**f. Sling Leg Crew (If Required).** The sling leg crew is used when there is not enough time or equipment to permit breakaway taping or the load has many obstructions which could entangle the sling legs. The sling leg crew personnel perform the following actions:

**(1)** Position themselves on or near the load on a stable surface.

**(2)** Hold the sling legs clear of obstructions until the aircraft has lifted enough to apply tension to the sling which will remove all slack from each leg.

**(3)** Exit the area of the load and move to the team's rendezvous point or exit direction.

**(4)** Stand by to return to the load on the team leader's signal, in case the helicopter dips down and the sling legs become entangled in the load.

**g. Additional Personnel.** Any extra personnel, such as equipment operators, will be positioned so that they are clear of the maneuver area and away from the landing points. The rendezvous point is a good position for these additional personnel (USA).

## 3-5. PERSONNEL BRIEFING

All personnel involved with the mission should be thoroughly briefed on their duties and responsibilities. The briefing should include, but not be limited to, discussion of the following items:

- Cargo to be carried.
- Operating area description and peculiarities.
- Aircraft approach direction, cargo hookup/release, and aircraft departure.
- Ground/aircrew duties including communications, static grounding, personnel approach/exit procedures, and special safety precautions.
- Procedures to follow in the event of aircraft emergency.

## 3-6. RECEIVING TEAM RESPONSIBILITIES

The receiving team, along with the HST team supervisor, is responsible for:

- Locating, clearing, and marking the receiving landing site.
- Establishing and maintaining required communications.
- Directing and controlling helicopters within the landing site.
- Discharging static electricity if manual release is required.
- Conducting manual release of the sling from the cargo hook, as required.

- Derigging delivered cargo.
- Providing vehicle and personnel ground control.
- Ensuring recovery of all sling equipment.

## 3-7. PERSONAL PROTECTIVE EQUIPMENT

Ground personnel involved in helicopter sling load operations are exposed to hazards that could cause serious injury. These hazards include noise, rotor wash, static electricity, flying debris, and operations around suspended cargo. Certain items of personal protective equipment must be worn to provide for maximum personnel safety.

**a. Head and Neck Protection.** A helmet or cranial protector is required to provide protection from flying debris and other objects. It also offers some protection if personnel are struck by the helicopter or cargo hook. The helmet must be securely fastened to ensure that it cannot be blown off or lifted up into the helicopter blades. Appendix G has a component listing for the MC-140 helmet.

**b. Eye and Ear Protection.** A protective mask or eye goggles are required to protect ground crewmen's eyes and to allow them to see well enough to operate effectively. Hearing protection, such as ear plugs, must be used to protect ears from noise and the entry of sand or dust. The MC-140 multiple-purpose helmet provides protection against all the hazards listed above. This helmet also includes a shroud for neck protection.

**c. Hand Protection.** Marine Corps/Navy static wand person/hookup men are required to wear electrical workers gloves for static discharge burn protection. All other personnel (USA/USAF/USCG) should wear leather gloves to help protect their hands and fingers. If electrical workers gloves are available, all static wand persons should wear them for added protection from static discharge burns. To ensure adequate protection from static electric shock, electrical workers gloves must be inspected before and after each operation. They should be checked for excessive wear, fraying, holes, and tears. Do not use a glove that is torn. Even a small hole leaves a person unprotected from static electric shock. Gloves can be checked for holes by filling them with water and squeezing while holding the open end closed. The gloves can also be checked by blowing air into them like a balloon. Submersion in water will indicate whether there are leaks.

**d. Clothing.** To prevent clothing from flapping or snagging on cargo, the ground crew will roll their sleeves down and button their shirts and jackets. Military-approved combat, flight, or safety boots will be worn during sling load operations ashore. During shipboard sling load operations, shoes with rubber heels and soles are required. Personnel should remove watches, rings, and jewelry to prevent them from being caught in the sling set or load. Army personnel must wear their identification tags during a sling load operation.

**NOTE: During a sling load operation with an H-53E, all personnel should wear body armor (flak jacket) because of the amount of debris blown by the rotor wash.**

**e. Flotation Equipment (Life Vest).** All personnel involved in shipboard operations or operations near water must wear flotation equipment.

**f. Other Equipment.** The static discharge wand is used to protect the hookup man from static electric shock. Smoke grenades are used to mark the location of the landing site and/or indicate wind direction. Flashlights with wands are used to give hand-and-arm signals at night. Figure 3-1 shows equipment that is normally needed. The equipment national stock numbers (NSN) are listed in Appendix B.

## 3-8. DISCHARGING STATIC ELECTRICITY

In flight, the stored static electric energy of any helicopter increases with helicopter weight, low humidity, and amount of debris blown by the rotor system (for instance, dust, sand, or snow). Extremely high static electric discharges may also occur when operating in or near thunderstorms. When the helicopter touches the ground, this charge is grounded out. However, while the helicopter is in flight, this charge remains stored in the aircraft. A ground crewman provides a path for this charge to follow into the ground when he connects the apex fitting to the cargo hook. This charge may cause severe electrical burn or injury.

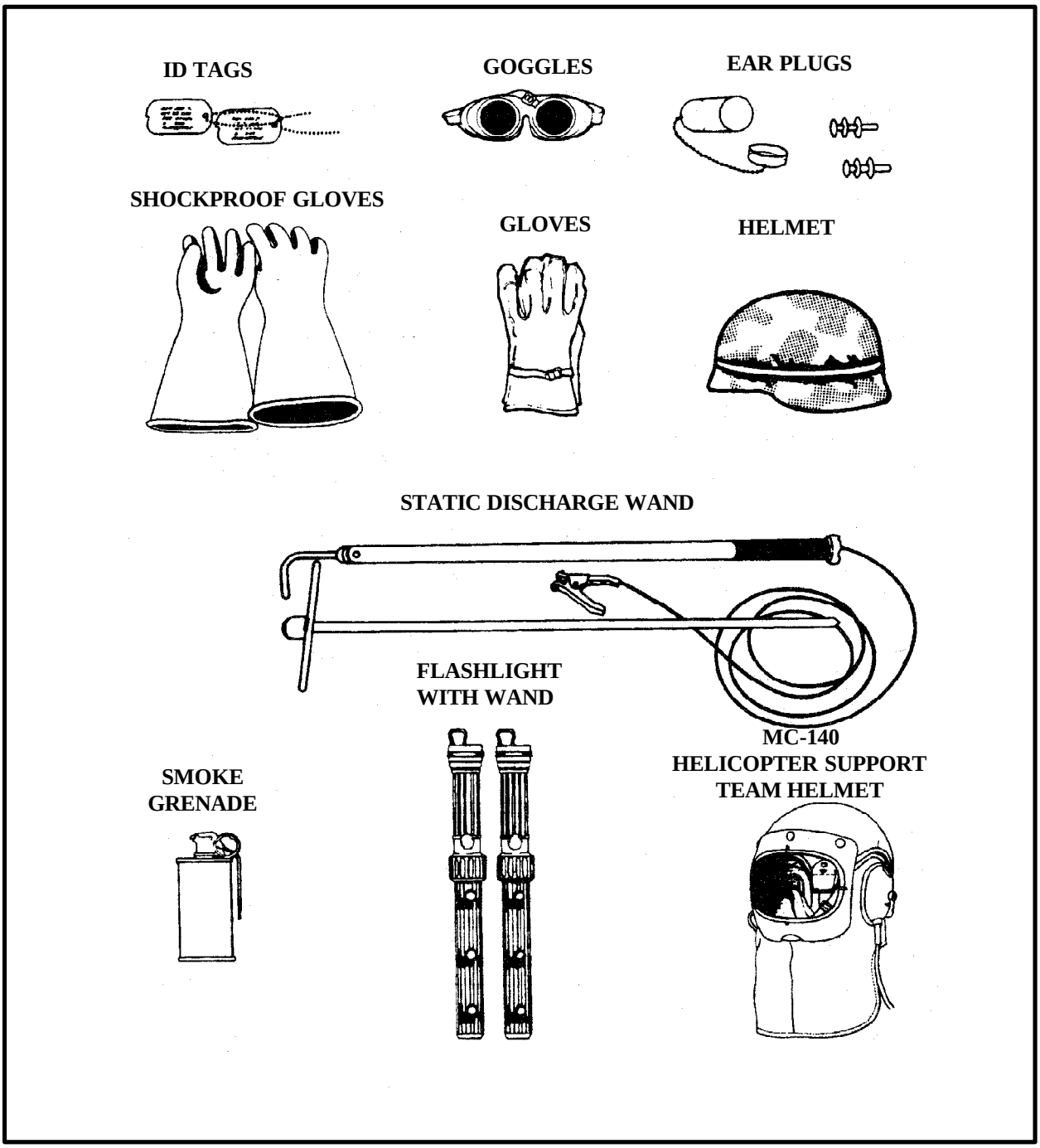


*Figure 3-1. Personal Protection Equipment*

**NOTE: The static discharge wand is not required when a reach pendant is used.**

**NOTE: Qualified medical personnel should be available during sling load operations involving multiple pickups or deliveries. If medical personnel are not available, a member of the ground crew should be thoroughly familiar with basic lifesaving procedures. A first-aid kit should be included in the crew's equipment.**

**a. Static Discharge Wand.** To avoid the possibility of a static electric shock, ground crewmen use discharge wands (field expedient and manufactured) to ground the cargo hook. Since these wands connect the helicopter to the ground, the static electric charge is dissipated and the hookup man will not receive a shock when he connects the apex fitting to the cargo hook. Figure 3-2 shows a manufactured static discharge wand. This wand may be ordered through supply procedures. Appendix D provides instructions, materials list, and a diagram needed to fabricate a field expedient static discharge wand.

**b. Manufactured Static Discharge Wand Inspection.** The manufactured grounding wand consists of an insulated plastic tube with a metal hook on one end and an attached grounding cable and clamp on the other end. A ground rod is also included. The grounding wand is not intended to be repaired. If the wand or first 10 feet of cable (closest to the wand handle) is punctured or cracked, discard the wand. If either of the black plugs on the ends of the wand come out (they are allowed to rotate), discard the wand. Never attach metal fittings to the wand or cable. The following maintenance will preserve the electrical capability of the wand and cable:

**(1)** Remove fuel, grease, or oil from wand. Remove salt water residue or dirt. Wipe dry. Contaminants on the wand may be conductive and allow an electrical discharge to travel the outside surface of the wand and reach the operator.

**(2)** Store the wand in a dry place out of direct sunlight. Turn the wand upside down and coil the cable lariat-style into several loops (12-inch diameter). With the last remaining loop, interlace the cable around the loops several times and attach the clamp to the end plug. Hang the wand upright by the wand hook. Do not attach clamp jaws to the grounding cable because you may puncture the cable insulation.

**c. Operating Instructions for All Static Discharge Wands.** Inspect static wand to make sure it is in serviceable condition. Select the grounding rod location. The recommended location is on the side of the load opposite from rendezvous point or ground crew exit direction so that the hookup team will not trip over the cable as they depart the load.

**(1)** Drive the rod into the ground until firmly seated. A minimum of 6 to 8 inches is required in firm ground, 24 inches in sandy or loose soil. Drive the grounding rod in at a 45-degree angle away from the side of the load. This angle will cause the rod to bend, resulting in

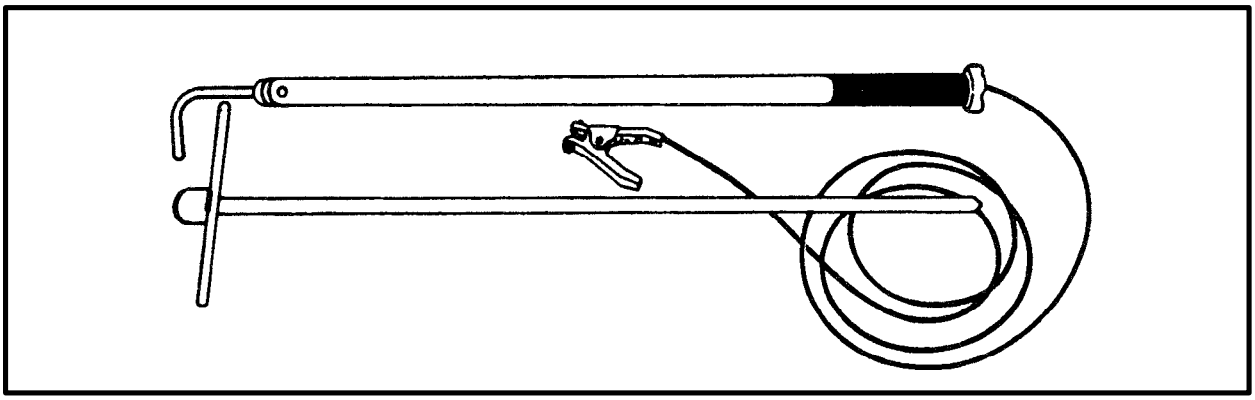

*Figure 3-2. Manufactured Static Discharge Wand*

a less severe injury if someone should fall on it. Connect the cable clamp to the vertical shaft of the stake (Figure 3-3).

**(2)** When operating on concrete or asphalt surfaces, position loads as close to the edge of the surface as possible so that the grounding rod can be driven into the ground. For shipboard operations, the cable clamp is attached to a deck pad eye or designated grounding point.

**(3)** Do not hold the discharge wand within 14 to 16 inches of the metal hook end. A strong static charge can jump up to 12 inches. To be effective, the grounding wand must maintain contact with the cargo hook during the hookup operation (Figure 3-4). If contact is lost, all personnel will pull back from the hook until contact is reestablished between the wand and the aircraft's cargo hook.

## 3-9. (USA) GROUND CREW RENDEZVOUS POINT

The most dangerous phase of the sling load operation occurs as the aircraft hovers over the load; therefore, the ground crew must clearly understand the emergency exit procedure. The first area to identify is the aircraft emergency area, because the rendezvous point location is directly influenced by the aircraft emergency area location.

**a. Aircraft Emergency Area.** In an emergency situation, the pilot will attempt to maneuver the aircraft to an open area that affords the crew the best chance of survival. In other words, if the pilot has any control of the aircraft, he will not land in an area that has trees, wires, or buildings. Therefore, try to keep an open area clear of any loads and designate that area as the aircraft emergency area. Since the terrain at each landing site

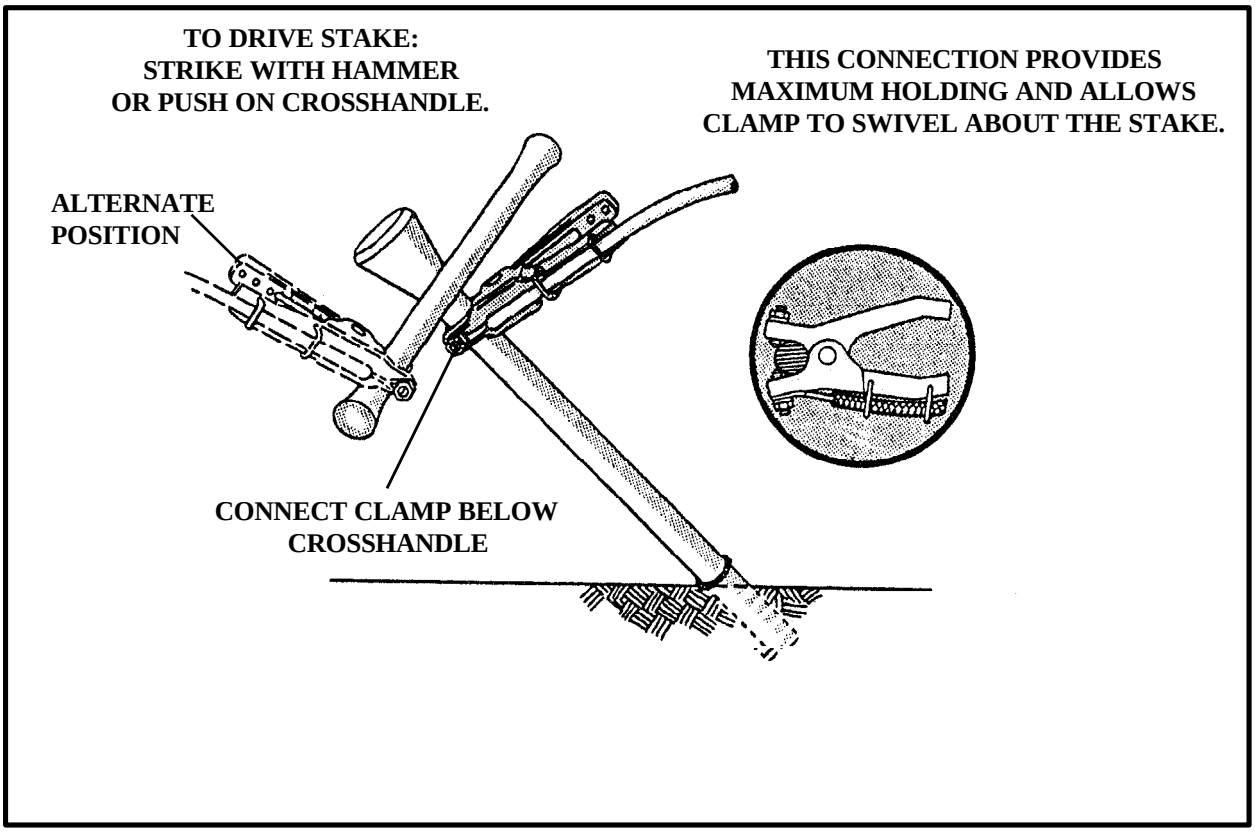


*Figure 3-3. Grounding Rod Connection*

location is different, the aircraft emergency area may not always be in the same general location (for instance, always to the right or left of the load). Hence, you must designate and identify the aircraft emergency area for each landing site through prior coordination with the aviation unit.

**b. Rendezvous Area.** The NCOIC must identify a rendezvous point where his ground crew can assemble after each hookup or in the event of an emergency. The rendezvous point should be well away from the aircraft emergency area. During an emergency, the ground crew should be as far away from the aircraft emergency area as possible. The rendezvous point is also a good location for all personnel not involved with the hookup operation. The rendezvous point should be an area that is easily identified (for instance, tree, bunker, building, vehicle, wooded area) by the ground crew because they may be disorientated during an emergency.

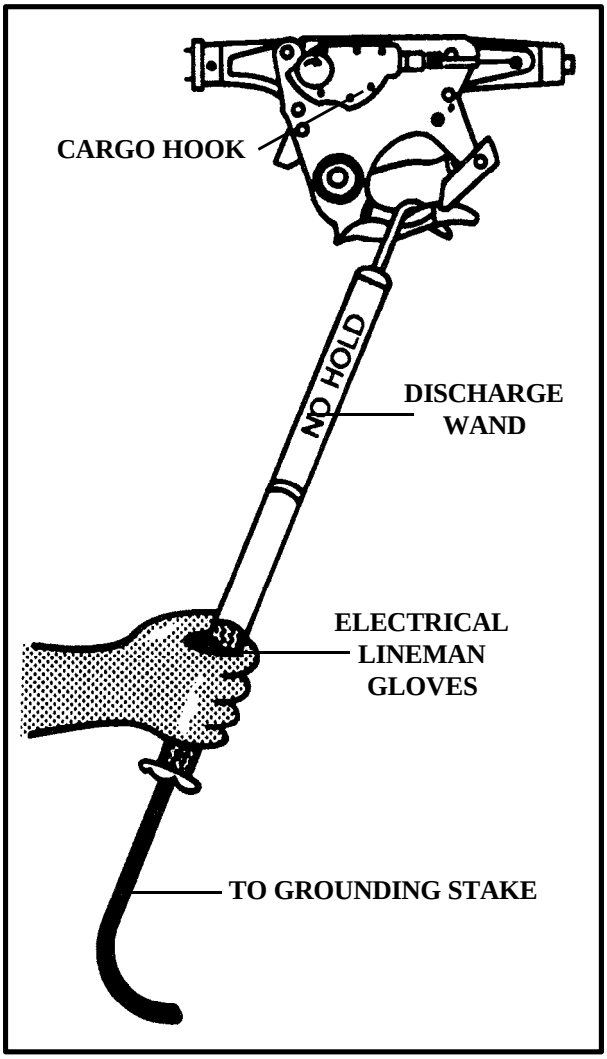


*Figure 3-4. Positioning the Static Discharge Wand on Aircraft's Hook*

**NOTE: If the wind direction changes from when you initially positioned the loads in the landing site, you may have to redesignate the aircraft emergency area and the rendezvous point because the aircraft approach direction may change.**

**c. Coordination.** If at all possible, coordinate both the aircraft emergency area and the rendezvous point with the aviation liaison officer or helicopter crew before the start of the operation. Helicopter emergency procedures depend on terrain, wind direction, and pilot choice. Good prior coordination will prevent the helicopter and the ground crew from moving in the same direction.

**d. Working Area.** Ground crew personnel should make every effort to work at the side of the load closest to the rendezvous point so that during an emergency they can clear from under the aircraft without climbing over or moving around the load. Ground personnel may or may not be told to clear the aircraft by a crew member in the event of an emergency. If the pilot is able, he will rapidly flash the landing light as a visual warning to the ground crew to clear the aircraft. All personnel involved with the sling load mission must exercise sound judgment and common sense in positioning themselves so that if the load should be accidentally dragged or lifted, they can move clear immediately to avoid injury. Figure 3-5 shows a typical layout for a landing site and a good location for the emergency landing area and rendezvous point. The landing site must be policed to prevent a flying object hazard. Any object that can be lifted by the rotor wash could become a missile and cause damage to equipment or injury to personnel.

## 3-10. HAND-AND-ARM SIGNALS

The radio is the initial means of communication and a landing zone control net should be established for sling load operations. However, the signalman uses hand-and-arm signals to communicate with the aircrew. These

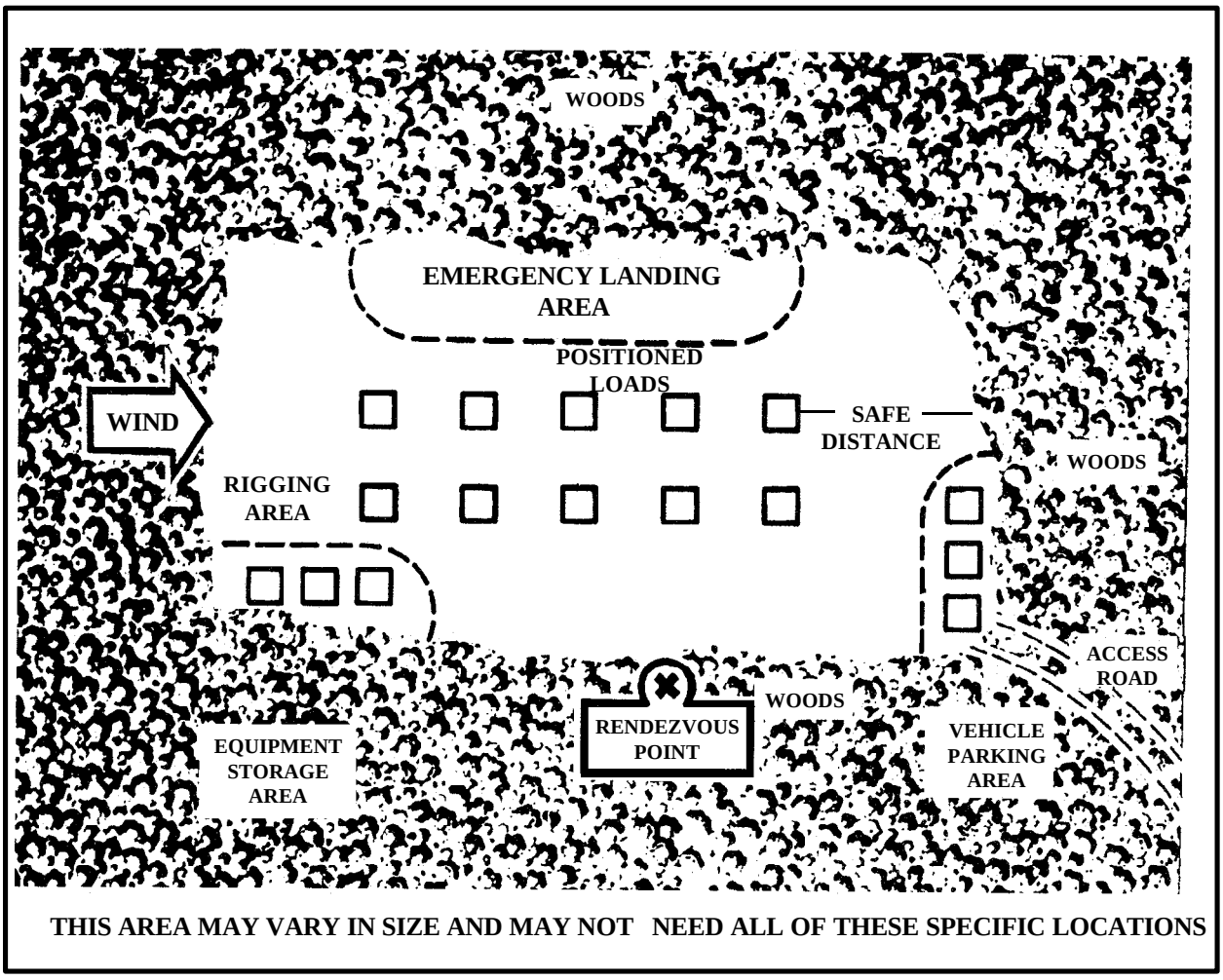


*Figure 3-5. Typical Layout of a Landing Site*

signals must be practiced and given with care. There can be no misunderstanding between the signalman and the pilot. The best way to learn these signals is to practice them. You should look at each signal and practice it in front of a friend or a mirror. Two or more people working together will speed up this part of the ground crew training. You will notice in the illustrations in Appendix A that the person on the right is using lighted wands (flashlights with plastic wands attached to the ends) for night operations. Chemlights should be used when the aircrew is using night vision goggles. Although not shown in the illustrations, the signalman sometimes uses paddles to make his signals more visible.

# CHAPTER 4

# LANDING SITE SELECTION AND PREPARATION

## 4-1. INTRODUCTION

The selection of a usable landing site is extremely important. Logistical and tactical considerations must be analyzed and taken into account to assure that the landing sites are located at the best place to support the mission. The area must also be accessible to the aircraft that are going to use the site. Since helicopters carrying sling loads may also be carrying internal loads and therefore have to land, this chapter covers the selection and preparation of a complete landing site. The supported or receiving unit commander, in coordination with the aviation liaison officer, if available, selects and prepares the landing sites. The aviation unit liaison officer or aircraft pilot makes the final decision concerning minimum requirements or the suitability of the sites. A landing site is an area within a landing zone (LZ) that contains one or more landing points.

## 4-2. LANDING ZONE DESIGNATION

An LZ is an area used for helicopter landing operations. The aircraft may not actually have to land on the ground but may only need to hover over a load. An LZ may include a number of landing sites with various landing points for individual helicopters (Figure 4-1). Landing zones may be designated by a series of code names. Landing sites and points are marked as designated by the aviation unit. Marine Corps landing sites are designated by color and landing points are identified by two-digit numbers such as 11, 15, or 32. The number of landing sites required for an operation depends upon the mission, terrain, number of aircraft, and the amount of equipment to be lifted.

## 4-3. LANDING SITE SELECTION

The supported or receiving unit, with advice from the

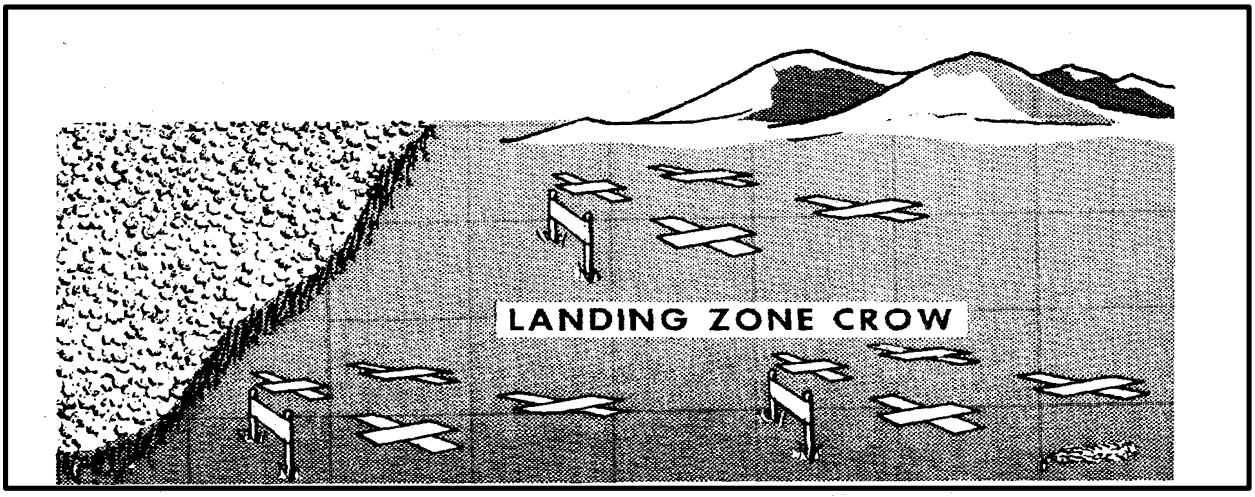


*Figure 4-1. Typical Landing Zone Layout*

aviation unit liaison officer, selects the location of the helicopter landing sites to best support the operation. The following factors should be considered in the selection of a landing site:

**a. Security and Concealment.** Landing sites should be located in areas that allow for maximum security or protection. They should be shielded from enemy observation by wooded areas or by masking the terrain. The selection of the approach and exit routes should also be based on the availability of good masking features.

**b. Convenience.** Landing sites that are used primarily for supply or resupply should be located near storage or supply points to reduce ground movement of cargo after it is delivered.

**c. Size.** The size of the landing site depends upon the number of landing points within it, the size of the landing points, the obstructions near or around the landing site, and the tactical dispersion required between the landing points. Minimum distance between landing points within a landing site is measured from the center of one landing point to the center of another. The diameter of the landing point for each type helicopter is shown in Table 4-1.

**Table 4-1. Required Landing Point Sizes**

| HELICOPTER SIZE | MINIMUM DIAMETER OF LANDING POINT | TYPE HELICOPTER |
|---|---|---|
| 1 | 80 feet (25 meters) | OH-6<br>OH-58 |
| 2 | 125 feet (35 meters) | UH-1<br>H-65 |
| 3 | 160 feet (50 meters) | UH-60<br>H-2 |
| 4 | 264 feet (80 meters) | CH-47<br>CH-53<br>H-3 |
| 5 | 328 feet (100 meters) | N/A |

## 4-4. CLEARING OBSTACLES

Each landing point must be level and firm enough to keep a fully loaded aircraft's landing gear from sinking into the ground. The ground is firm enough for size 1 and 2 helicopters if it can support a 1 1/4-ton truck. If the ground can support a 5-ton truck, size 3 through 5 helicopters can land without risk of sinking. The entire landing point must be cleared of any loose material or debris to prevent it from being blown into the ground crew or rotor blades, or drawn into the helicopter engines. Figure 4-2 shows the three different areas and conditions for each size landing point.

**CAUTION**

**All trees, brush, stumps, or other obstacles that could cause damage to the rotor blades or the underside of the aircraft must be cleared around the landing points. If trees must be cut, stumps in the immediate vicinity of the landing points must be cut as close to ground level as possible. It may be necessary to use axes, machetes, chain saws, or demolitions to clear underbrush and trees. It is not necessary to clear grass shorter than 1 foot that covers a level field unless a fire risk exists. Hard packed sod makes the best natural landing area.**

## 4-5. SLOPE OF SURFACE

Although helicopters can touchdown hover (one or two but not all of the wheels are placed on the ground) on any sloping ground which also provides the necessary rotor clearance, landing sites should be selected that are as level as possible. Where a slope is present, it should be uniform (Figure 4-3).You must confirm the landing site with the aviation unit, if the following criteria cannot be met:

**a. Daylight Approaches.** During daylight approaches,

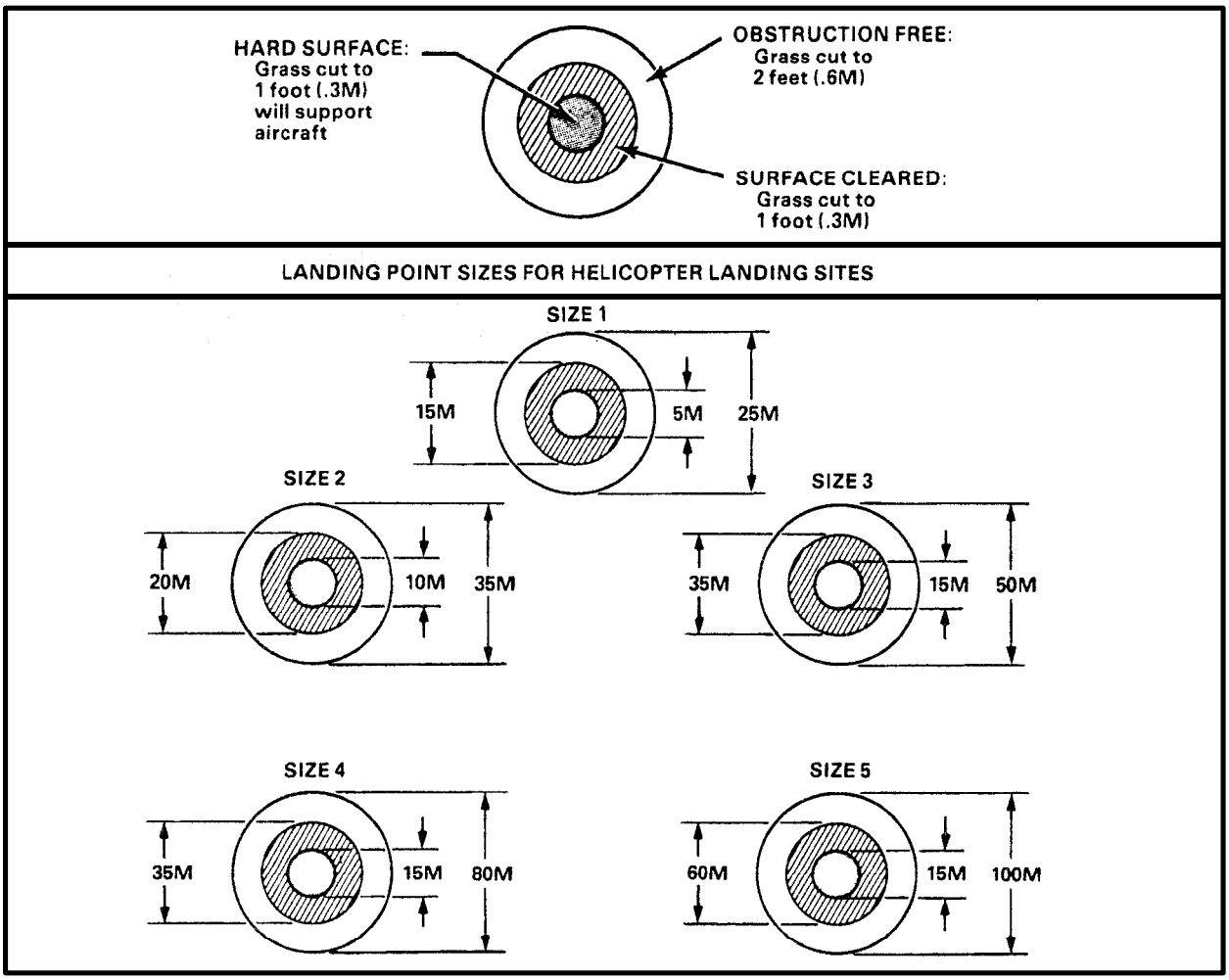


*Figure 4-2. Required Landing Point Characteristics*

the slope should not exceed 7 degrees or 13 percent if the helicopter must land. A greater slope may be acceptable for hover operations.

**b. Night Approaches.** During a night approach, a downslope as viewed from the approach path is not normally acceptable. Forward and/or lateral slopes should not exceed 3 degrees or 5 percent.

## 4-6. APPROACHES TO LANDING SITE

It is not desirable to establish landing sites that require the helicopter to take off or land vertically without any forward flight. Helicopters require greater power to ascend or descend vertically, thereby reducing their allowable payload. The helicopter will require less power if it can depart with some forward airspeed. Ideally, there should be an obstruction-free approach and exit path into the wind. These approach and exit paths should meet the following criteria. Approaches which do not meet these criteria may be acceptable, depending on the nature of the operation. However, when these criteria cannot be met, the supported or receiving unit must coordinate with the aviation unit or liaison officer.

**a. Day Approach.** Within the day approach and exit path, the maximum obstruction angle should not exceed 6 degrees measured from the landing point center to a distance of 500 meters (1,640 feet) (Figure 4-4). The maximum obstacle height at 500 meters is 52 meters

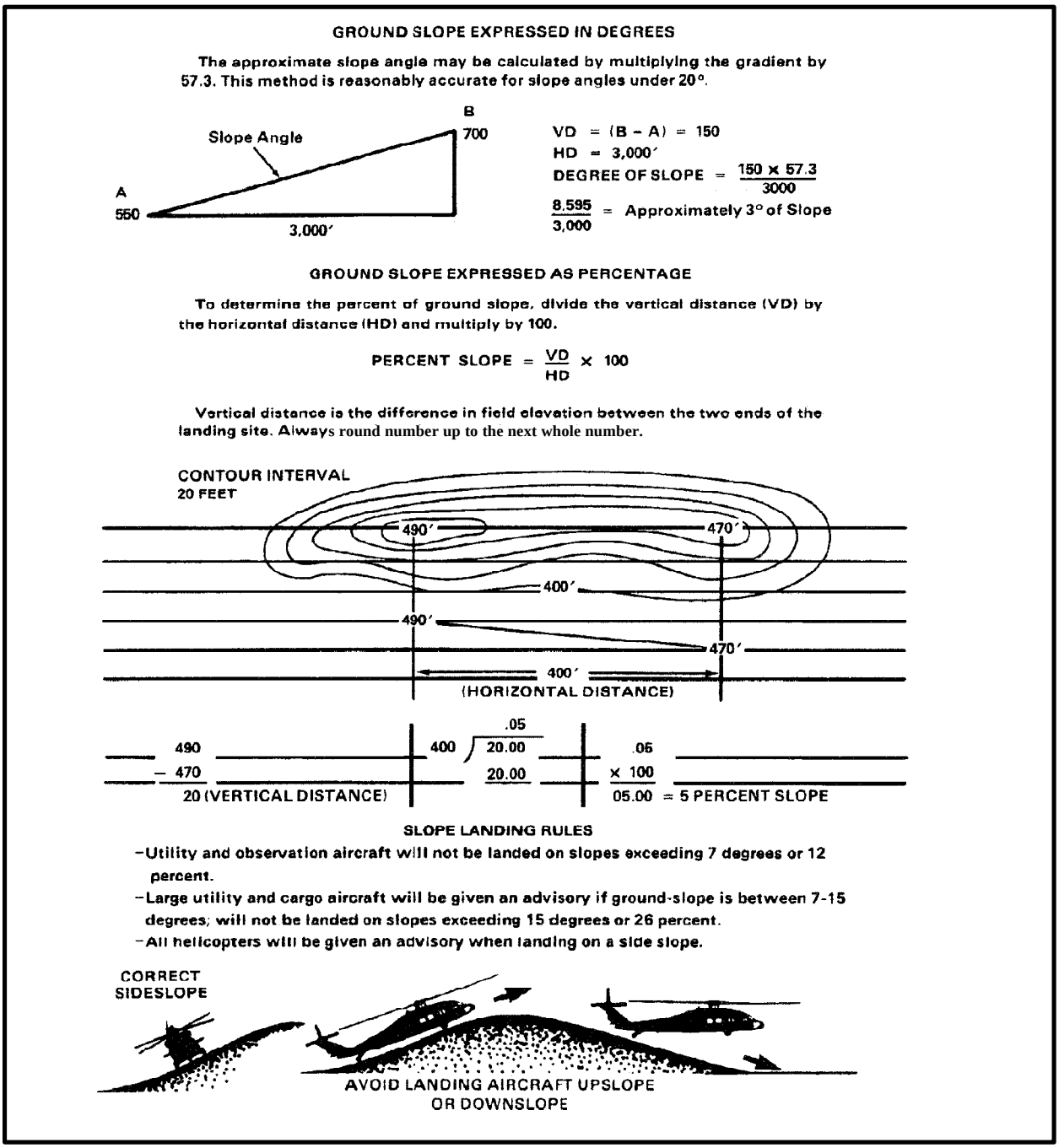


*Figure 4-3. Determining Ground Slope*

(171 feet). The 10:1 ratio (a field expedient formula) is that for every meter of vertical obstacle, you must have 10 meters from the center of the landing point to the obstacle. That is, a landing point center must be 200 meters from a 20-meter (66-foot) tree if the helicopter must approach or depart directly over the tree.

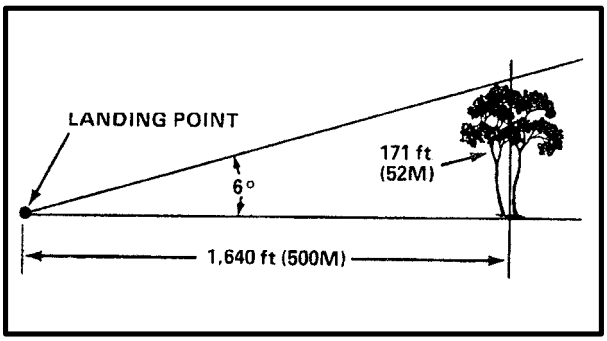


*Figure 4-4. Maximum Angle of Approach (Daylight)*

**b. Night Approach.** Within the night approach and exit path, the maximum obstruction angle should not exceed 4 degrees measured from the center of the landing point to a distance of 3,000 meters (9,843 feet) (Figure 4-5). The maximum obstacle height at 3,000 meters is 210 meters (689 feet). The field expedient formula is that for every meter of vertical obstacle, you must have 14 meters of distance from the center of the landing point to the obstacle. That is, a landing point must be 280 meters from a 20-meter tree if the helicopter must approach or exit directly over the tree. Another night operation planning consideration is the helicopter approach and exit path area and the maximum obstacle height within that area. Remember, this criteria applies to both the approach path to the landing point as well as the exit path from the landing point. First we must define the

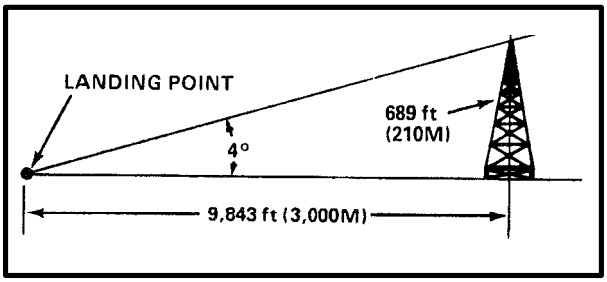


*Figure 4-5. Maximum Angle of Approach (Night)*

**c. Approach and Exit Path.** The approach and exit path is a 16-degree (277 mils) sector or arc extending outward and is measured from the center of the landing point (Figure 4-6). The V-shaped approach and exit path is depicted by the dashed and dotted line in the illustration. The 4-degree maximum obstruction angle applies to the entire area within the approach and exit path (both the dark and light shaded area) measured from the landing point center to a distance of 3,000 meters.

**d. Night Operations.** During night operations, as the pilot gets closer to the landing point, he needs a wider area for a safe approach than just the 16-degree sector. Therefore, the minimum width of the approach and exit path, illustrated by the darker shaded area, must be equal to or wider than the width of the landing point that must be cleared to a maximum height of 2 feet (Figure 4-2). The length of the minimum width area, dimension X, will vary depending on the size of the landing point. See Table 4-2.

**Table 4-2. Length of Minimum Width Area**

| LANDING POINT SIZE | WIDTH OF LANDING POINT (meters) | DIMENSION X (meters) |
|---|---|---|
| 1 | 25 | 90 |
| 2 | 35 | 125 |
| 3 | 50 | 180 |
| 4 | 50 | 285 |
| 5 | 100 | 355 |

Follow along as we use a UH-60 Blackhawk as an example to help clarify the night approach and exit path criteria. Table 4-1 identifies the UH-60 Blackhawk as a size 3 helicopter. Next we must determine the landing point area that must be free from obstructions and grass cut to maximum height of 2 feet. Figure 4-2 indicates 50 meters as that area for a size 3 landing point. Therefore, the minimum width of the night approach and exit path is 50 meters. The minimum width distance intersects the 16-degree V-shaped arc (night approach and exit path) 180 meters from the center of the landing point. In other words, the night maximum obstruction angle applies to the complete approach and exit path; both the rectangular-shaped wedge (dark shaded area of the diagram) as well as the 16-degree V-shaped arc (light shaded area and dotted line).

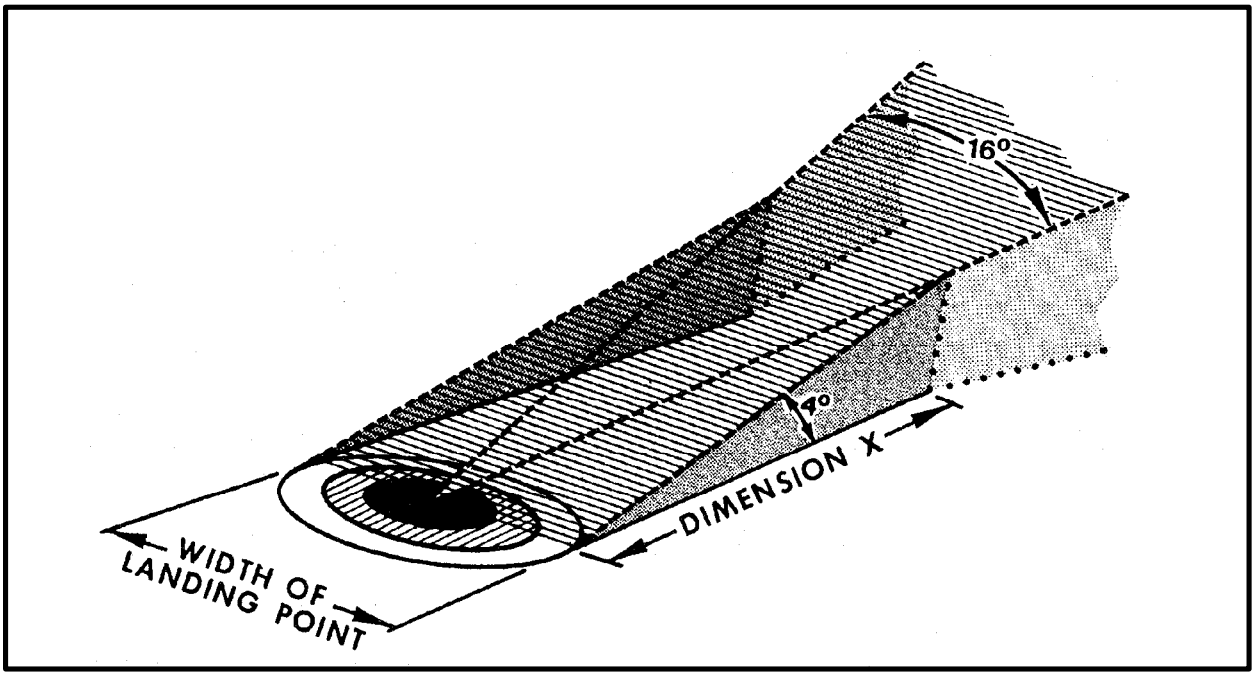


*Figure 4-6. Approach and Exit Path*

## 4-7. AIRCRAFT FORMATION APPROACH (USA)

In large tactical relocations or resupply missions, the helicopters will normally fly in formation. The landing site and the ground crew must be prepared to receive them. When possible, helicopters should land in the same formation in which they are flying. However, planned formations may require modification for helicopters to land in some areas. If a modification in flight formation is required for landing, the change requiring the least shift of helicopters should be used and the flight leader notified as soon as radio contact is made. For common aircraft formations, see Figure 4-7. Figure 4-8 illustrates a landing site for three size 3 helicopters landing in a vee formation. Many times size 4 helicopters will not fly in standard flight formations and therefore will be received one or two at a time. In such cases, the landing site configuration in Figure 4-9 is suggested. Each aircraft initially approaches and hovers at the inverted "Y" light formation and is then guided to its cargo pickup point by the signalman.

**a. Daylight Markings.** The landing site should be marked with marker panels or other visual means. Smoke may be used, but it also may disclose your position to the enemy. If marker panels are used alone, the wind direction is indicated by placing the crossmembers or top of the "T" into the wind. The marker panels must be securely fastened to prevent the helicopter rotor wash from tearing them from the ground. If smoke is used, only release it after the pilot requests smoke. The pilot will then identify the color and relay it to the ground crew. Make sure the smoke canister is far enough away from the landing point that the rotor wash does not pick up the smoke and obstruct the aircrew's vision.

**b. USMC Markings.** When using marker panels to identify landing sites, the panels must correspond to the color name of the landing site. If a wind sock is used, position it securely in the center of the landing site. Landing points are indicated by placing the corresponding colored marker panels in the form of a cross on the landing point (Figure 4-10). Smoke may also be used to identify landing points.

**c. Army Markings.** Army signalmen identify the landing site by either holding both arms vertically overhead or by holding a folded VS-17 marker panel (NSN 8345-00-174-6965) chest high. He then points to the

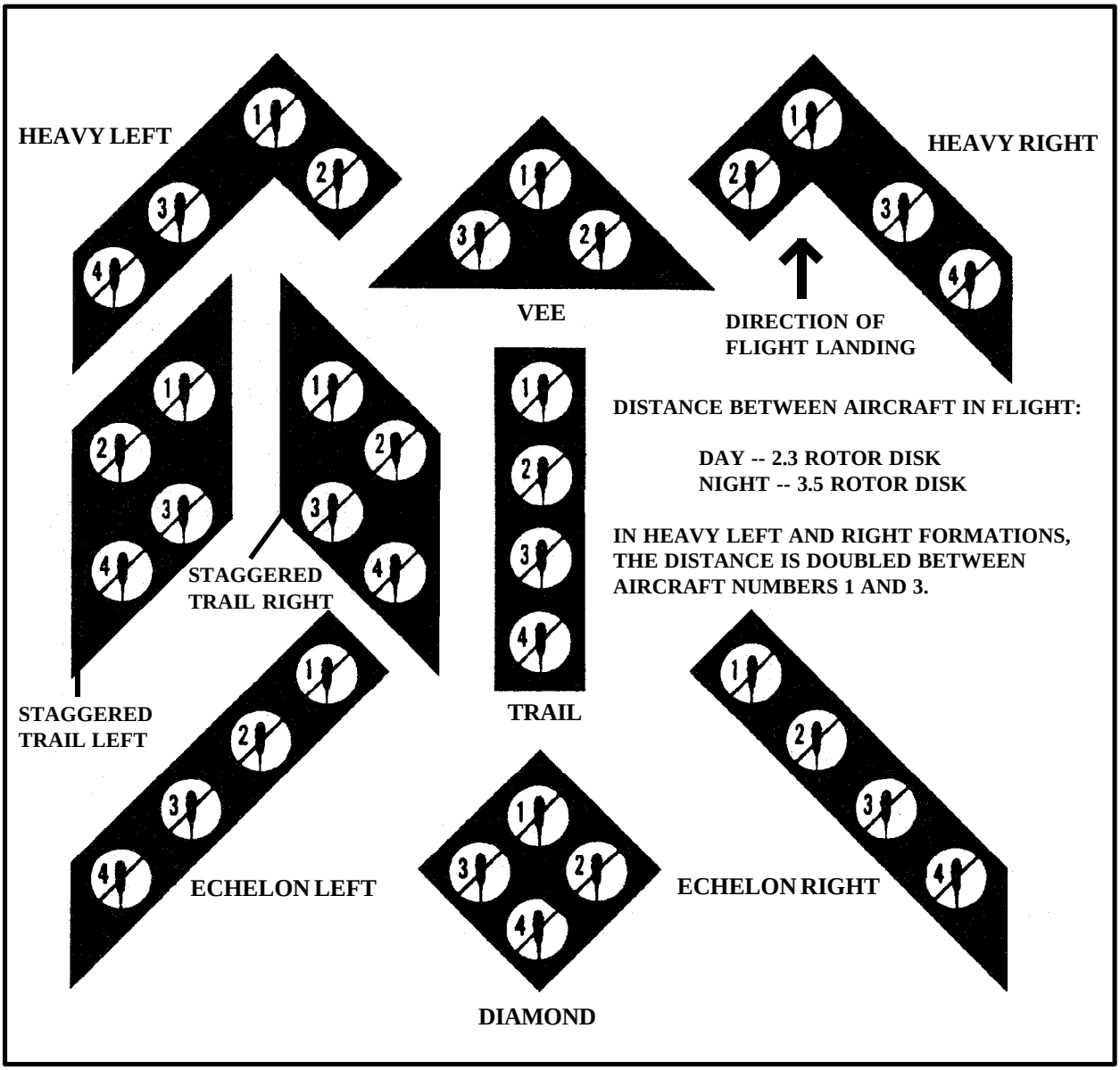


*Figure 4-7. Standard Flight and Landing Formations*

correct landing point.

**d. Night Markings.** Landing sites and landing points used during night operations are carefully marked because the terrain features used during daytime operations are obscured. Two methods are used: the "T" or inverted "Y" light pattern or the glide angle indicator light (GAIL) system (USMC). The "T" or inverted "Y" light system is used to assist the pilot in locating, landing, and maneuvering within the site. Keep the following factors in mind:

**(1)** Bright lights, especially intense or high beams, will temporarily blind the pilot. Only use dim lights in the vicinity of the landing site.

**(2)** Chemlights, wands, or flashlights can be used to mark landing sites and points.

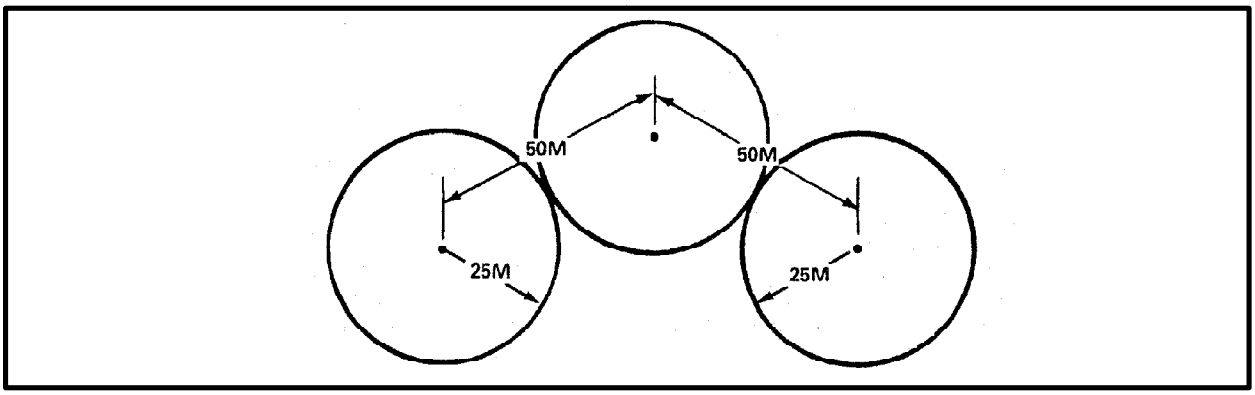


*Figure 4-8. Aircraft Landing Site for Three Size 3 Helicopters in Vee Formation*

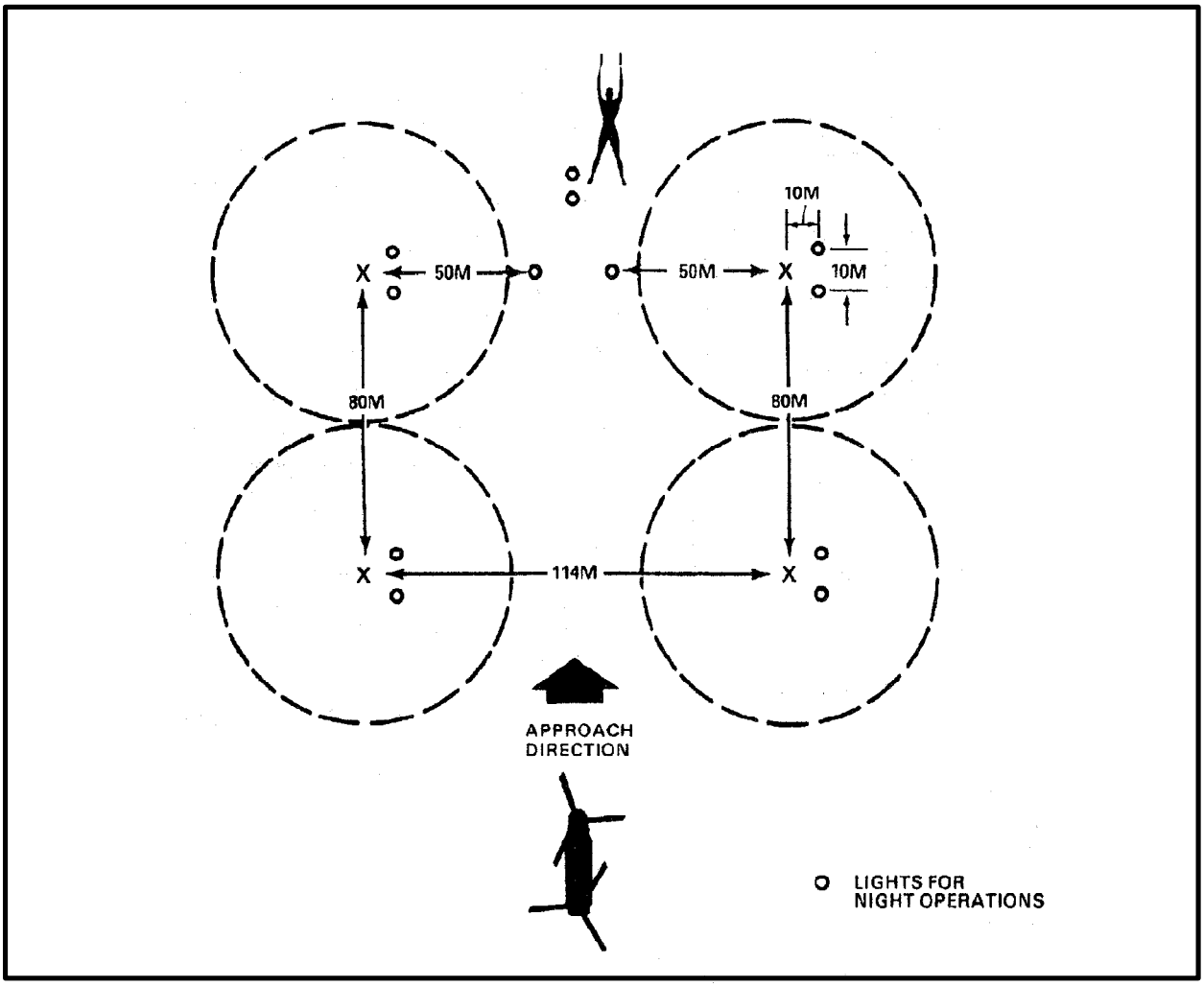


*Figure 4-9. Size 4 Helicopter Landing Site*

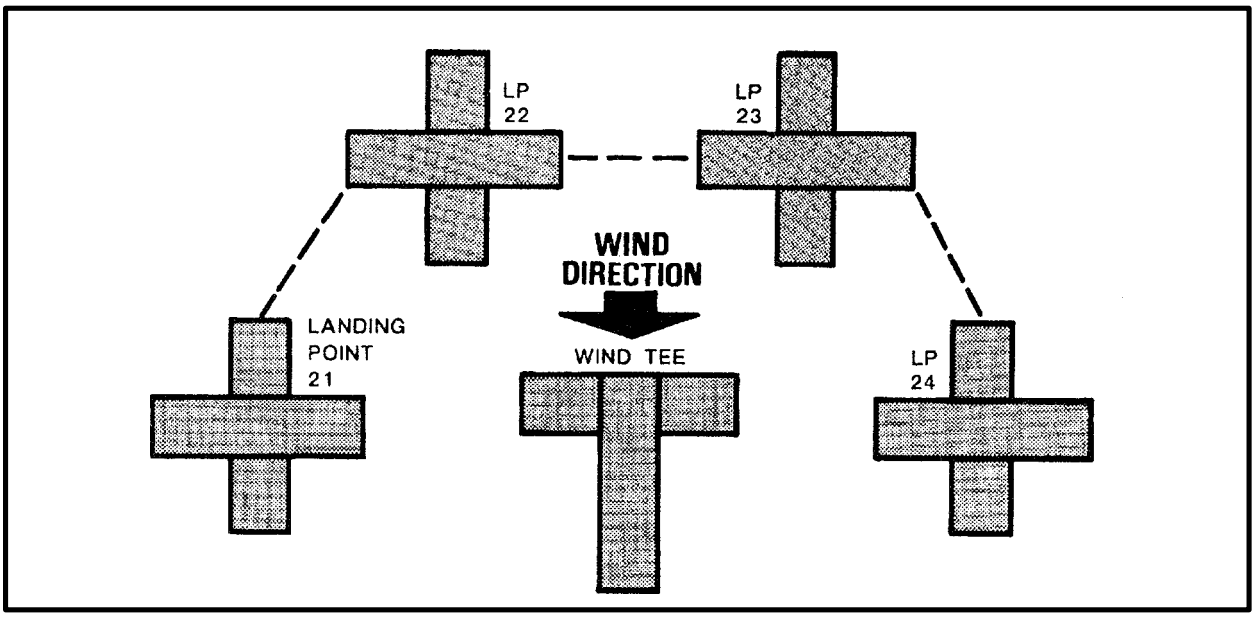


*Figure 4-10. Daylight Landing Site Markings (USMC)*

**(3)** Night vision goggles (NVG) compatible (blue-green) lighting must be used when the aircrew is using NVG.

**e. The Inverted "Y" Light Formation.** The inverted "Y" light formation is set up using four lights positioned according to Figure 4-11. The cargo is placed between the two stem lights and aligned with the base and directional lights. The single aircraft or lead aircraft in a formation flight will touch down or hover into the "Y," midway between the legs of the "Y."

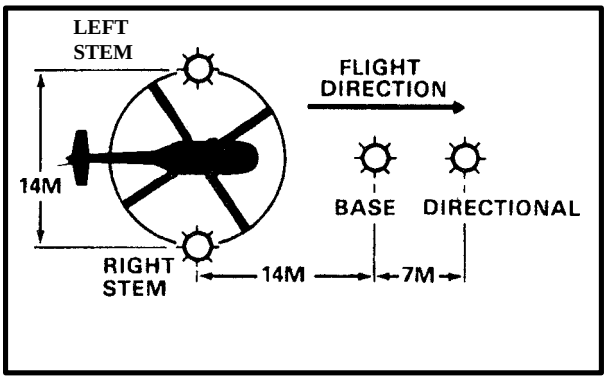


*Figure 4-11. Inverted "Y" Light Formation*

**f. The "T" Light Formation.** The "T" light formation is set up using five lights placed according to Figure 4-12. The cargo is positioned 5 meters to the left of the base light and midway between the base light and stem light. The lead aircraft lands to the left of the base light and just short of the stem lights.

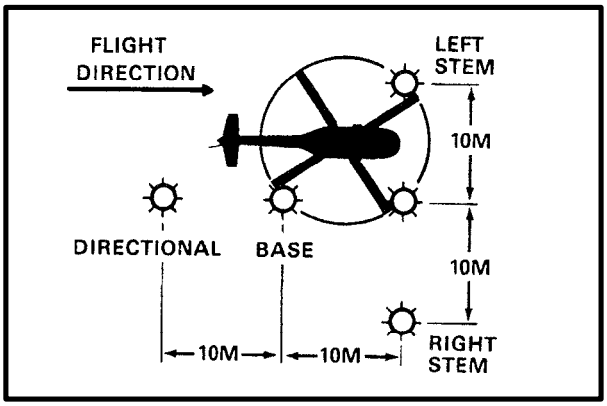


*Figure 4-12. "T" Light Formation*

**g. Lights**. Beacon (bean bag) lights are used for both the inverted "Y" and "T" light formations. If beacon lights are unavailable, several alternate methods can be used to mark the landing site. Cyalume light sticks (commonly referred to as chemlights) are often used to

mark the landing site. These lights (Figure 4-13) are plastic tubes filled with a liquid chemical and a glass vial inside containing another chemical. When the glass vial is broken (by squeezing the plastic tube), a chemical reaction between the two liquids produces a glowing light. Depending upon the size of the tube, the glow lasts from 30 minutes to 12 hours. The chemlights can be taped or tied to stakes and positioned in the landing site. Chemlights are available in different colors and glow times (see Appendix B).

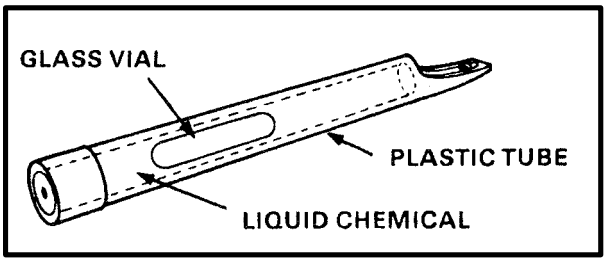


*Figure 4-13. Chemlight Stick*

**h. Emergency Lighting.** During an emergency, various lighting patterns can be used with proper coordination between the aircrew and ground personnel. A common method using vehicles is shown in Figure 4-14. This method should only be used in an emergency because it impairs the pilot's night vision and can disclose the landing site position. Refer to the NWP-55-9-ASH for other variations of night landing patterns (USMC).

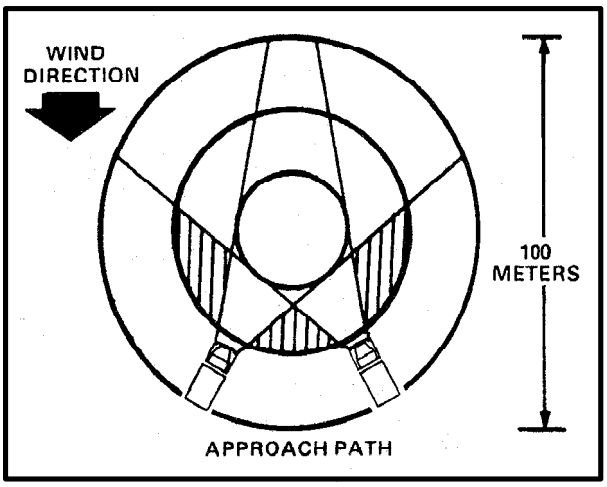


*Figure 4-14. Emergency Lighting Pattern*

**i. Glide Angle Indicator Light (GAIL).** (USMC) The GAIL system is used whenever possible (Figure 4-15). The GAIL is positioned to project its beam along the preferred direction of approach. The glide path angle must provide clearance over the highest obstacle along the avenue of approach. Glide path angles from 3 to 8 degrees are common and acceptable. Angles greater than 8 degrees are considered too steep and could cause difficulty in maintaining the aircraft on the glide path. Since the GAIL has a narrow beam width, assist the pilot in finding it by placing additional lights in the landing site. Remember, the preferred direction of approach is into the wind. However, when the landing site size does not allow the glide path to be directed into the wind without exceeding 8 degrees, the GAIL system should be shifted left or right to a glide path of less than 8 degrees. Ap-

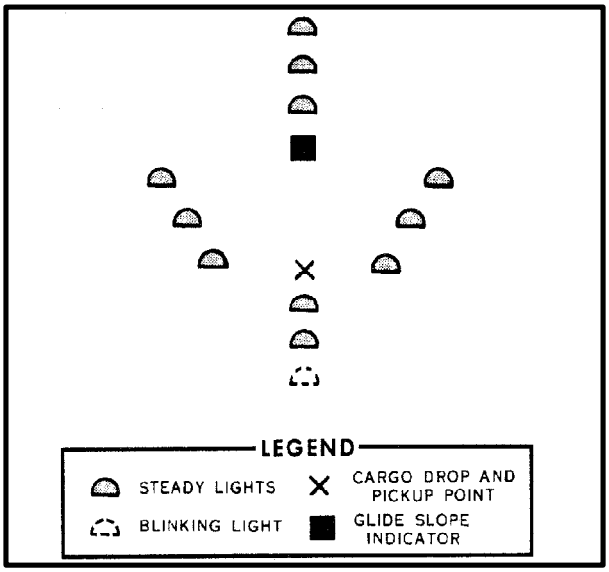


*Figure 4-15. GAIL System*

**j. Crow's foot.** (USMC) The crow's foot is an optional lighting system used during night operations. Infrared chemlites are attached to tent stakes at 15 meter intervals as shown in figure 4-16.

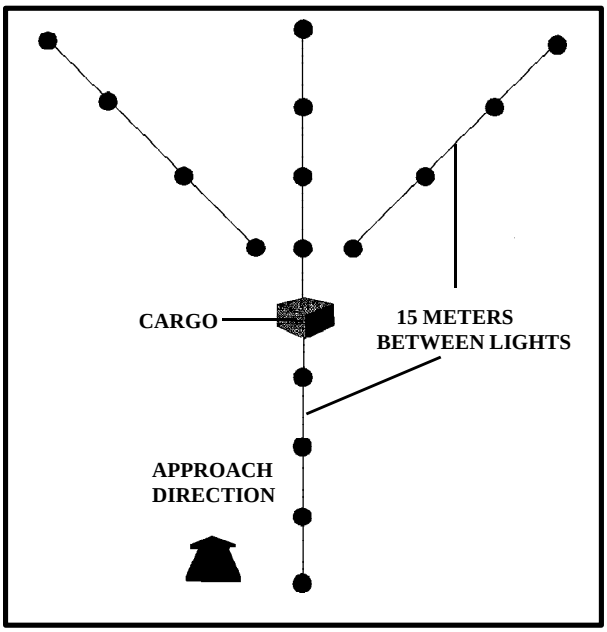


*Figure 4-16. Crow's Foot System*

## 4-8. MARKING LANDING POINTS

The inverted "Y" and "T" light formations identify the landing site. Multiple landing points must be marked within the landing site so that the pilot will know where the load is located. Landing points for size 1 through 3 helicopters are marked with a single light. Landing points for size 4 and 5 helicopters are marked with two lights spaced 10 meters apart. The aircraft lands to the left of the lights. Figure 4-17 illustrates how to mark individual landing points for size 4 helicopters. As an additional reference point to assist the pilot, three lights may be placed in a triangular formation 25 meters upwind of the landing point. The three lights are positioned 5 meters apart from each other with two of the lights placed in a straight line with the landing point. The third light is placed to the right of the line midway between the two lights. Whenever the landing site permits, the landing points should be increased to the next larger size to provide an extra margin of safety for night operations.

## 4-9. MARKING OBSTACLES

During daylight operations, obstacles that are difficult to detect or impossible to remove, such as wires, holes, stumps, and rocks, are marked with red panels or any other easily identifiable means. Use red lights (NSN 6230-00-115-9996) to mark obstacles for detection at night. The tactical situation may not permit you to mark all obstacles in the approach or exit path. However, red lights should be used whenever possible to mark all obstacles and hazards. Inform pilots of all unmarked hazards and obstacles.

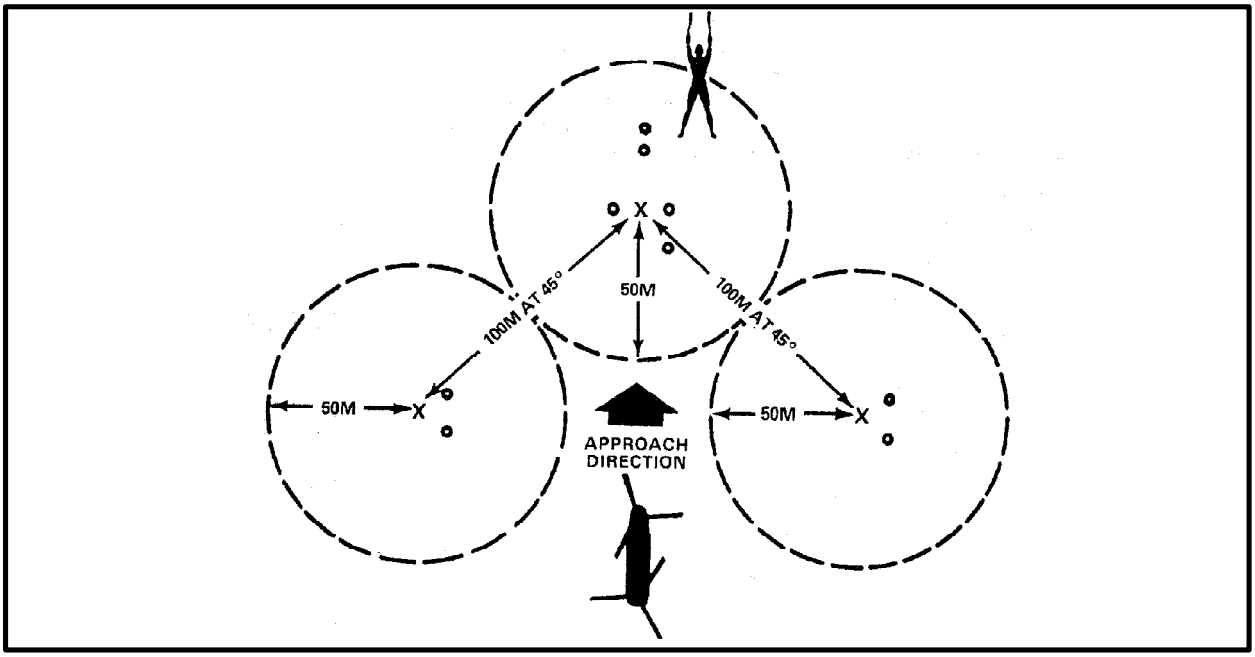


*Figure 4-17. Landing Points Marked for Size 4 Helicopter*

# CHAPTER 5

# HOOKUP AND RELEASE PROCEDURES AND RELATED OPERATIONS

## 5-1. INTRODUCTION

This chapter discusses general load hookup and release procedures and related operations including types and preparation of some loads. It also discusses operations under difficult conditions, such as desert, snow, aboard ship, and at night.

## 5-2. GENERAL HOOKUP PROCEDURES

Positions in relation to the aircraft are referred to by an o'clock system (Figure 5-1): 12 o'clock position is the nose of the aircraft, 3 o'clock position is the right (starboard) side, and 9 o'clock is the left (port) side. Avoid approaching or departing under the aircraft from the 4 o'clock position clockwise around to the 8 o'clock position due to hazards presented by landing gear, tail rotor, and the inability of the aircrew to monitor the ground crew.

**a. Planning.** Thorough planning is a very important phase of any sling load mission. Select the landing site area that avoids flight over vehicles, buildings, or con-

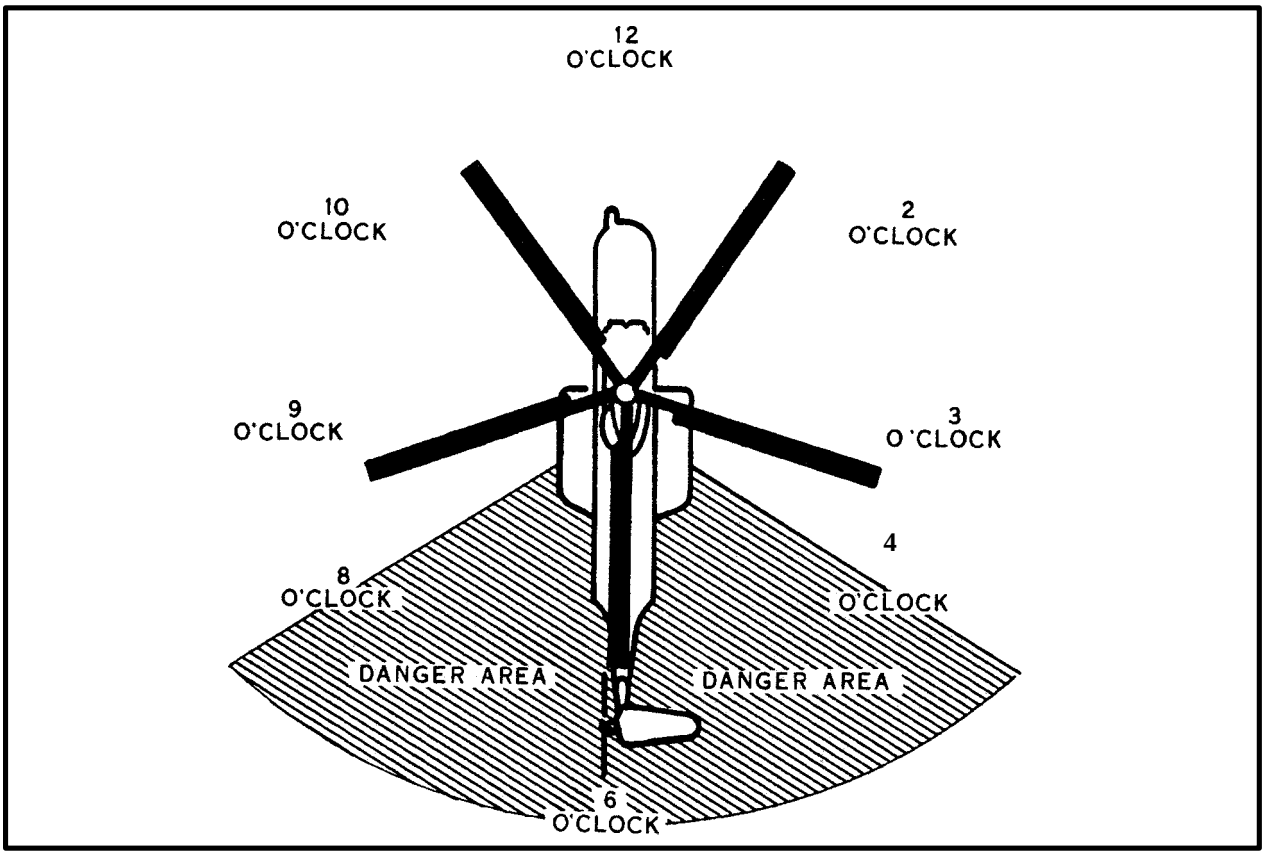


*Figure 5-1. Helicopter Station Diagram*

gested areas and provides optimum safety. Avoid areas of dust, mud, snow, or ice.

**b. Surface Conditions.** Grassy fields, edges of runways, ramps, or paved roads normally provide good surface for sling load operations. Once the commander has designated the areas to be used, ground crew personnel clear the landing site and set up markings to identify the area from the air. When the situation permits, they coordinate with the pilot to determine which way the helicopter will go in an emergency.

**c. Cargo Preparation.** Before the operation starts, the ground crew must make sure that the cargo has been correctly prepared, rigged, and inspected for sling loading. If vehicles or equipment are not prepared properly, they could be damaged when lifted by the helicopter. Loads should be pre-positioned to expedite hookup.

**d. Static Wand.** The static wand person drives the grounding rod into the ground on the side of the load opposite the rendezvous point/exit path. See Chapter 3 for detailed instructions concerning the grounding rod and static discharge wand.

**e. Positioning Personnel (Army).** As the helicopter approaches the landing site, the ground crew personnel put on their equipment and take up their positions. The signalman positions himself at the aircraft's 12 o'clock position, upwind of the load, facing the load and the aircraft (Figure 5-2). The USMC outside director is referred to as a signalman.

**f. Positioning Personnel (USMC).** Marine Corps HST operations require different positions for the HST personnel (Figure 5-3). As the helicopter approaches the landing site, the outside director is at a position of 2 (or 10) o'clock upwind of the load. From this position he is able to guide the helicopter over the load with the pilot's [illegible] approach. The helicopter is to

**g. Positioning Hookup and Static Wand Personnel.** The hookup man and static wand person go to their positions on top of the load. The hookup man is the first to depart the load; therefore, he should be on the side of the load closest to the rendezvous point exit path. The

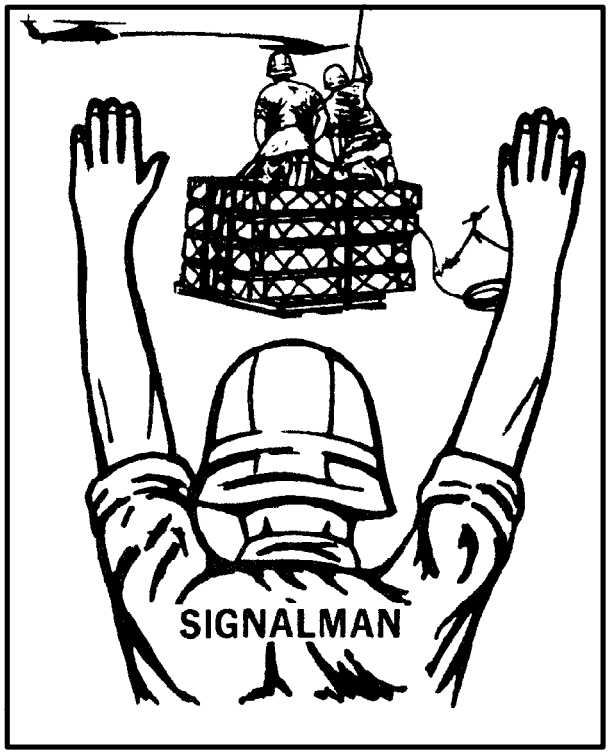


*Figure 5-2. Ground Crew Initial Position*

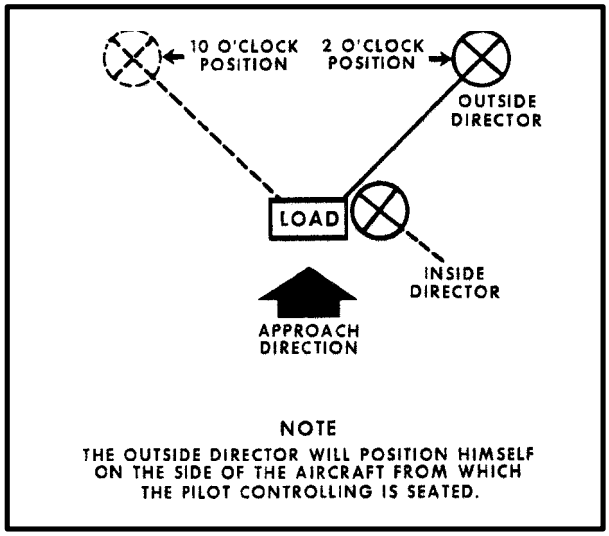


*Figure 5-3. HST Initial Position*

static wand person is the last person to leave the load, so he should be on the opposite side of the load. The hookup team may be stationed on the ground along the side of

the load if the load is difficult or unsafe to stand on. Any extra personnel, such as equipment operators, will be positioned so that they are clear of the hookup area and away from the approach and exit paths. No personnel should be positioned on the ground in the approach path between the load and the aircraft.

**h. Hookup Team Procedures.** Hookup team personnel should kneel down, brace themselves, and hold securely to the load because of the rotor wash. The hookup man will have the apex fitting/web ring in his hands ready for hookup. The static wand person will hold the static discharge wand so that the red line or the **DO NOT HOLD** area is above the hookup team's helmets, as in Figure 5-4.

**(1)** The signalman identifies himself and the load for the pilot by holding up both arms,palms forward, as in Figure 5-5. As the pilot continues his approach, the signalman should move to one side or the other so the pilot can easily see his hand-and-arm signals.

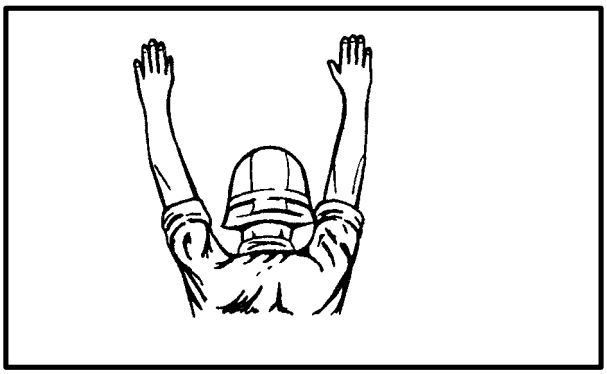

*Figure 5-5. Assume Guidance*

**(2)** The pilot controlling the helicopter may indicate which side the signalman should move to by use of either the radio, landing lights, or some other means. The signalman then moves to the aircraft's 10 o'clock position if the pilot on the left controls the aircraft or to the 2 o'clock position if the other pilot has control. Ensure that the pilot controlling the aircraft and the signalman

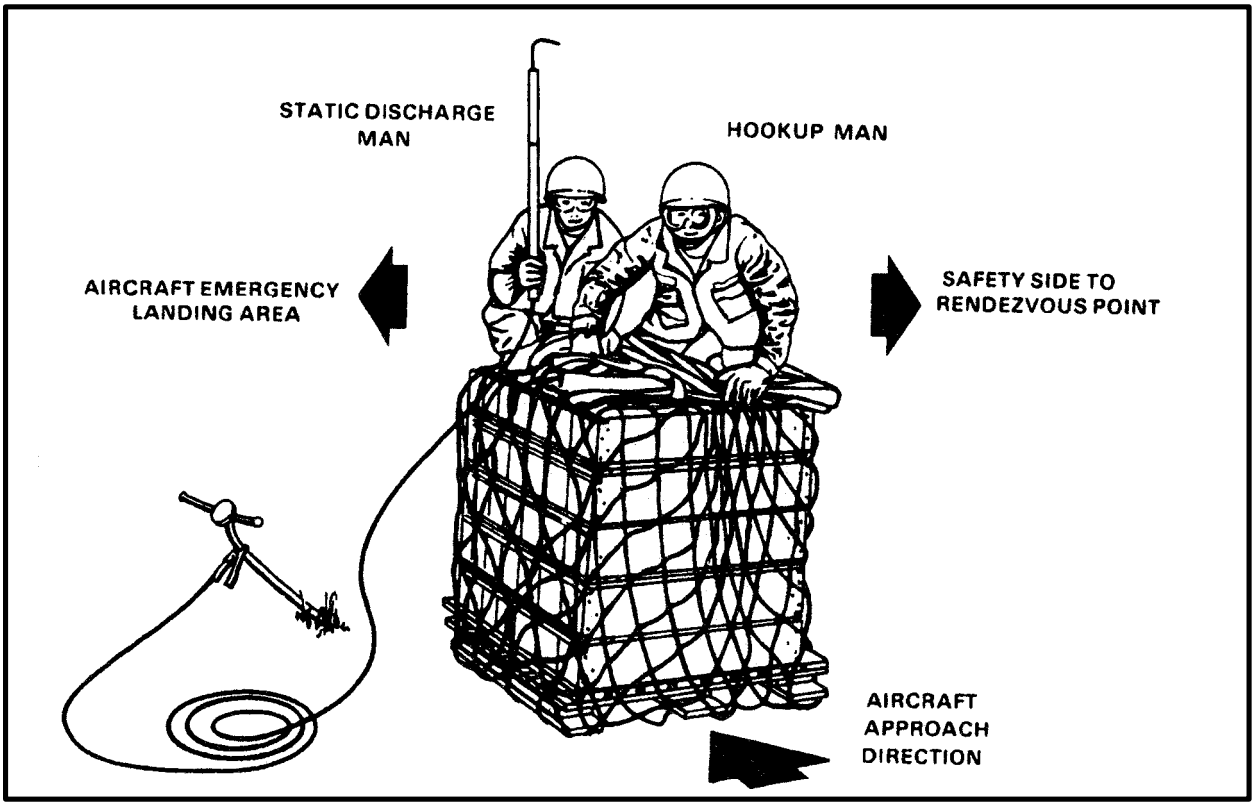


*Figure 5-4. Hookup Team Position*

maintain visual contact at all times throughout the hookup.

**(3)** If the signalman cannot determine which pilot is flying the aircraft, he should position himself at a 45-degree angle from the nose of the aircraft in an open area so the pilot can clearly see him and his hand-and-arm signals. The signals must be precisely given to prevent any misunderstandings between the signalman and the pilot. While the helicopter is hovering, the signalman is responsible for the safety of the hookup team. The hookup team must alertly watch the helicopter during the complete operation (Figure 5-6).

**(4)** The helicopter approaches the load with the pendant or hook prepared for hookup. The pilot maneuvers in position over the load as directed by the signalman and the aircrew member. The aircrew member normally gives final maneuver and hookup instructions to the pilot over the aircraft interphone.

**(5)** After the aircraft passes over the hookup team, the rotor wash decreases. At that time, the hookup team stands up and watches for the cargo hook or moves under the aircraft for hookup on signal from the aircrew if not pre-positioned on or by the load. Once the helicopter is in a stable hover and correctly positioned, the signalman signals the pilot to maintain his hover and the ground crew begins the hookup.

**(6)** The static wand person grounds the cargo hook prior to any contact by the hookup man and maintains that grounding contact until the hookup is complete. If the static discharge wand contact is broken with the aircraft hook, hookup personnel should not touch the cargo hook until wand contact is reestablished. The hookup man maintains visual contact with the static wand person and does not attempt hookup until the hook is grounded. If using the H-53E dual-point hookup system, each hook must be grounded before the sling is connected to the cargo hook. This requires one static wand person for each hook. The CH-47D dual-point system requires only one static wand person.

**WARNING**

**Helicopters are susceptible to high levels of stored static electrical energy. Severe electrical shock may result from improper grounding of the cargo hook system.**

**NOTE: When a reach pendant is used a static discharge wand is not required.**

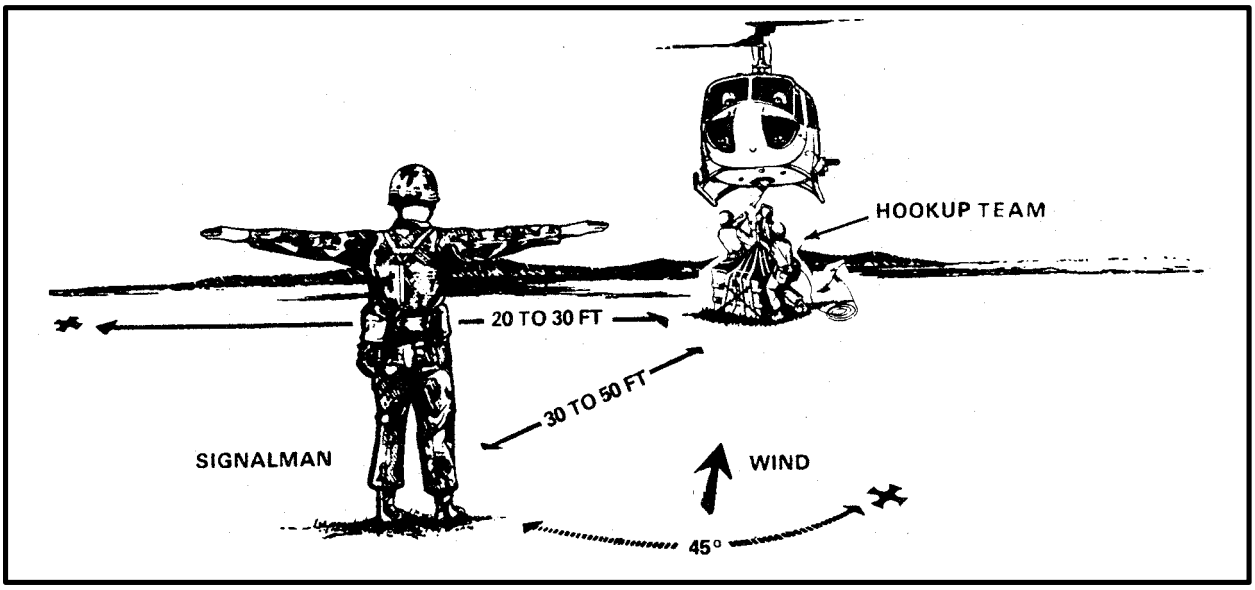


*Figure 5-6. Relationship of Aircraft, Signalman, and Hookup Crew*

**(7)** The hookup man places the apex fitting/web ring on the cargo hook as soon as he can reach it after the hook is grounded. Make sure that the apex fitting/web ring is connected in the proper orientation. If the apex fitting is backwards when it is placed on the cargo hook, the load will be carried opposite to the direction it was rigged. After hooking up the apex fitting to the cargo hook, check to make sure the hook is locked by giving a sharp pull on the sling legs. The hookup man lets the signalman know if there is anything wrong with the hook or the load by gesturing.

**(8)** After completing the hookup, the hookup man climbs off the load. The static wand person breaks contact with the cargo hook and then drops the static discharge wand to the ground. He must make sure the wand is in the vicinity of the grounding rod so no one will trip on the grounding wire while dismounting the load. The hookup team departs the hookup area forward of the aircraft's 8 or 4 o'clock position to the rendezvous point or other briefed location. Initially, they should move away from the load about 50 feet.

**(9)** After the hookup team is clear, the signalman signals to the pilot that the load is hooked up. He then signals the pilot to move upward to take the slack out of the sling legs. The inside signalman, if used, ensures that all ground crew personnel are clear of the load before the aircraft lifts the load. As the aircraft rises, the signalman and hookup team watch the load for any problems with the rigging or if the load may require correction. If the rigging is correct, the signalman gives the pilot the affirmative signal.

**(10)** When the load is 10 to 20 feet higher than the surrounding loads or obstacles, thesignalman gives the takeoff signal in the direction he wishes the pilot to depart the landing site. When pointing, the signalman steps off in the same direction as he is pointing to make his signal more pronounced. He then moves out of the way so the helicopter does not pass directly overhead. After the pilot completes any required aircraft checks, he departs the area (Figure 5-7).

**(11)** If the sling legs could not be taped or tied (breakaway technique) to prevent them from becoming entangled during lift-off, the hookup team or additional personnel may be required to guide the sling legs as the aircraft lifts up and removes the slack from the sling legs. These personnel must use extreme caution so that they do not become trapped between the sling legs and the load. Proper breakaway technique taping prevents the sling legs from becoming entangled on the load. If the helicopter settles back down once the load is hooked

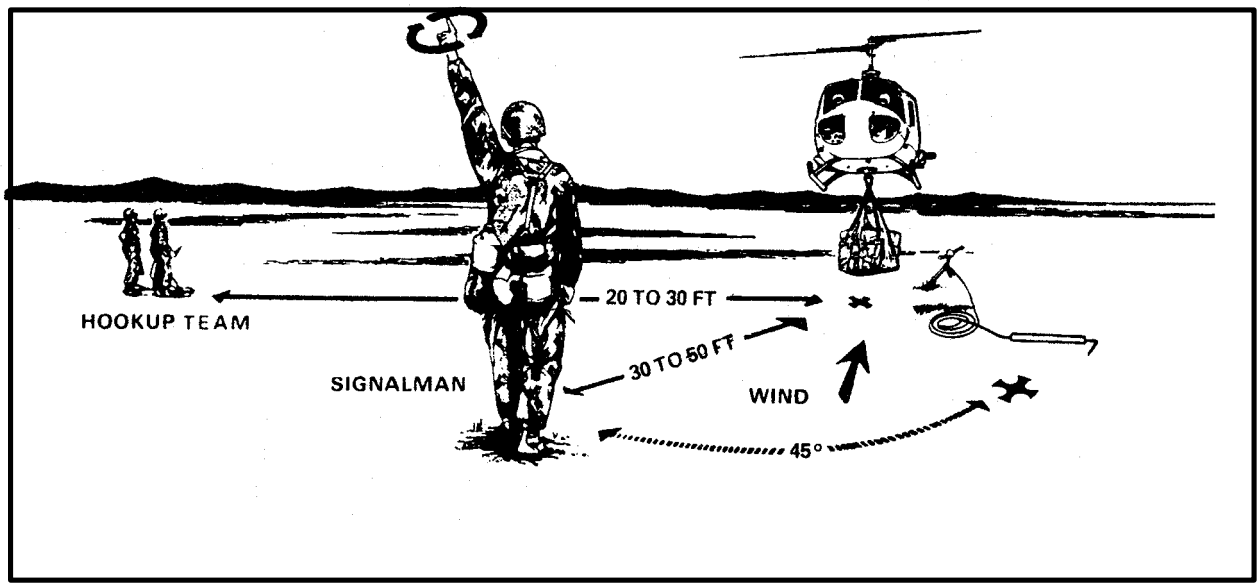


*Figure 5-7. Ground Crew Positions During Helicopter Takeoff*

up, make sure the sling legs are not entangled on the load.

**(12)** If the load is not correct (for instance, tangled slings or uneven loads), the signalman gives the pilot the "hookup" signal followed by the "negative" signal. He directs the pilot to lower the load to the ground. If the problem can be easily corrected, he signals the hookup team or sling leg team to return to the load to guide the sling legs as described in the previous paragraph. If the problem is more serious, he signals the pilot to release the load so that the sling legs can be untangled and the hookup repeated. The pilot hovers away from the load, if required, so that the ground crew and sling legs are not blown about by the rotor wash.

## 5-3. SAFETY PRECAUTIONS FOR HOOKUP PERSONNEL

The following safety precautions are recommended for hookup personnel:

- Clear the area around the load of all objects that could be blown around by the rotor wash.

- Limit the number of personnel involved in the hookup operation.

- Wear protective equipment. A protective mask or helmet with a visor, such as the MC-140 helmet, is recommended to aid vision during high winds and turbulence caused by the rotor wash. At a minimum, wear eye goggles. Wear clothing that will protect against blowing sand and dust and not become snagged on the cargo.

- Place the apex fitting/web ring and sling legs on top of the load (or to the side of the load) so that during the hookup or lift-off, the legs will not become entangled on the load.

- Use hand-and-arm signals to direct the helicopter as shown in Appendix A.

- Maintain adequate clearance between the hovering helicopter and ground personnel at all times.

- Wear electrical workers gloves as applicable and use a static discharge wand during all hookups.

- Exercise sound judgment and common sense when stationing yourself by or on a sling load so that if the load is either accidentally dragged along by the hovering helicopter or prematurely lifted from the ground, you can move clear to avoid injury.

- For more details concerning these safety precautions and the designated rendezvous point (USA), see Chapters 1 and 3.

## 5-4. LOAD RELEASE PROCEDURES

Landing site preparation, safety precautions, protective equipment, and ground crew requirements for load release are similar to those required for hookup. The signalman is located in the same position with respect to the helicopter and landing point and directs the pilot to the load release point. When the load is over the release point, he signals the pilot to lower the load to the ground and hover to the side before giving the pilot the "release-load" signal. The pilot hovers to one side of the load to prevent the apex fitting from falling on the load and causing damage. If spreader bars are used in rigging the load, the pilot should hover low enough to rest the spreader bars on the load before releasing the apex fitting. If the aircrew cannot open the cargo hook, the pilot will notify the signalman. After the aircrew signals to the ground crew, they approach the cargo hook to manually release the load. The static wand person uses the static discharge wand to contact the cargo hook. The hookup man either depresses the spring-loaded keeper on the cargo hook or rotates the manual release knob/lever. When the load is released, the signalman gives the "affirmative" signal, followed by the "take-off' signal.

## 5-5. DUAL-POINT HOOKUP PROCEDURES

The same basic safety and hookup procedures apply during dual-point load hookup as during single-point hookup. An extra hookup person is required for the additional apex fitting. The H-53E requires a static wand person for each cargo hook. Since the CH-47D requires only one static wand person, he may maintain contact with any one of the three cargo hooks, but because no hookup man is at the center hook, it usually is the easiest hook to contact.

**a. Dual-point Procedures.** Dual-point load rigging procedures may be different from single-point rigging procedures, When possible, coordinate with the aircrew before attempting a dual-point hookup. Either cargo hook can be connected first. Do not mistakenly connect one of the slings to the center cargo hook.

**b. Aircraft Position.** The hookup teams must constantly be aware of the position of the aircraft and cargo hook. It is difficult for the aircrew member to watch both hookup teams as the aircraft hovers over the load. The pendant system on the H-53E (Figure 5-8) enhances hookup team safety by increasing load separation.

**WARNING**

**Use extreme caution when attaching the apex fitting to the cargo hook during a dual-point hookup. The aircraft must hover close to the load which could cause the aircraft to strike the load or personnel. Special care must be taken when connecting the aft hook. The rear of the aircraft has a tendency to dip down if the pilot has to move to the rear.**

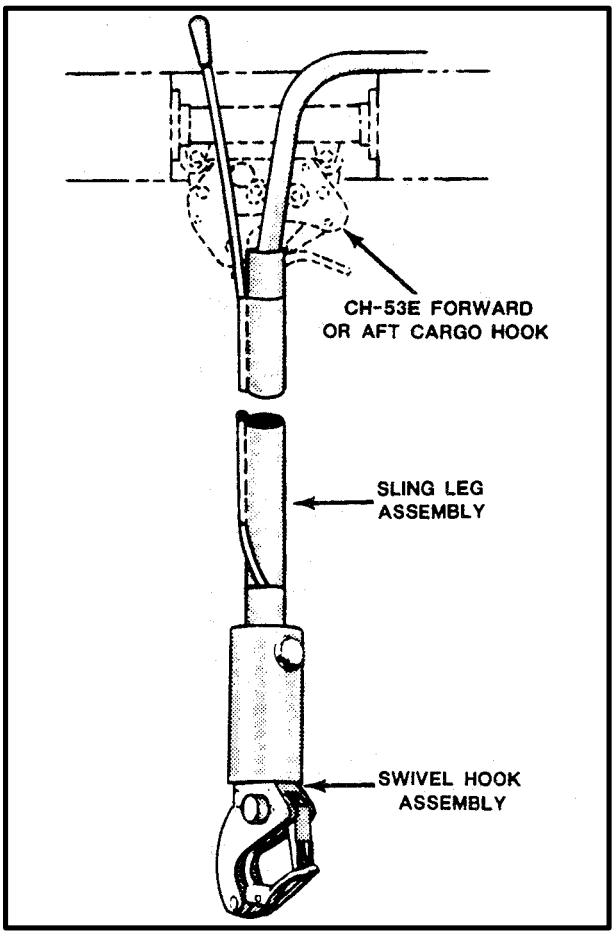


*Figure 5-8. H-53E Dual-Point Pendant System*

## 5-6. MULTIPLE SINGLE-POINT LOAD PREPARATION

Cargo nets, fuel drums, and water drums are common multiple single-point loads transported by the CH-47D (Figure 5-9). Load height and weight must be considered during the planning phase. Keep in mind that when the aircraft is at a hover, the rear cargo hook is lower than the front hook. In order to keep the aircraft center of balance within the allowable limits, if the loads will be released at different landing sites, the heaviest load should be connected to the center hook and the lightest load to the aft hook.

## 5-7. PIGGYBACK/ACCOMPANYING LOADS

Piggyback or accompanying loads are used to expedite the movement of weapon systems and ammunition at the same time. Small quantities of ammunition are bundled on the howitzer trails. Larger quantities are carried in cargo nets or A-22 cargo bags attached to the weapon using one or more sling legs. The weapon and accompanying load are positioned next to one another. The hookup man stands on the weapon to hook up the load. The helicopter lifts the weapon clear of the ground, hovers over the top of the accompanying load, and continues its vertical lift of the A-22 cargo bag or cargo net until it clears the ground (Figure 5-10).

**CAUTION**

**Do not exceed sling set, cargo hook, and aircraft capabilities.**

## 5-8. EXTENDED SLING SYSTEM

The extended sling system improves tactical efficiency and preserves the integrity of the crew and the sling load

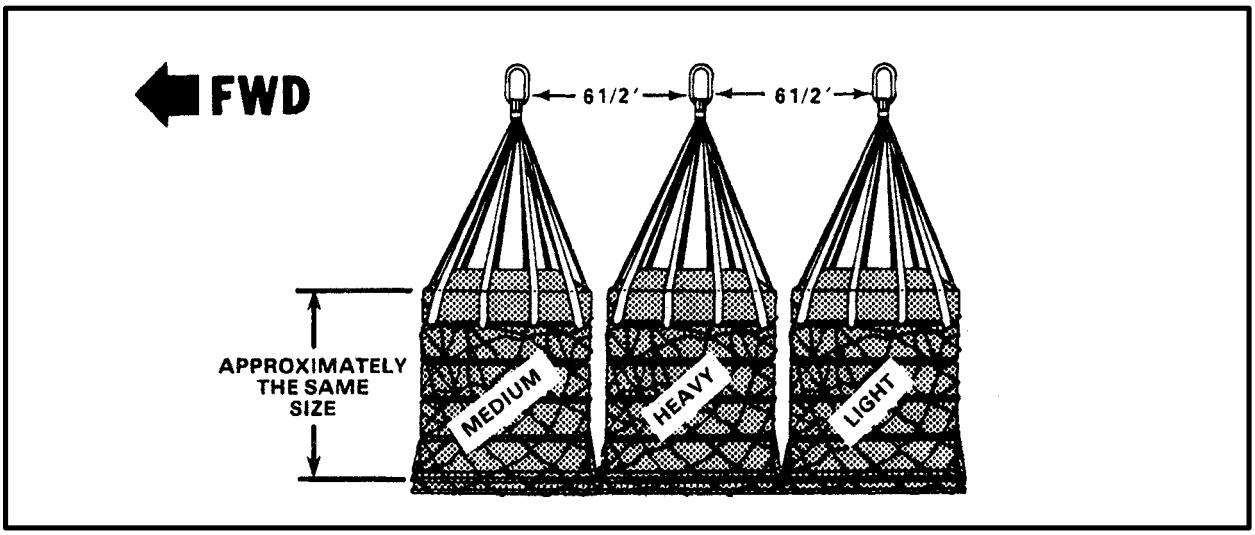


*Figure 5-9. Multiple Single-Point Load*

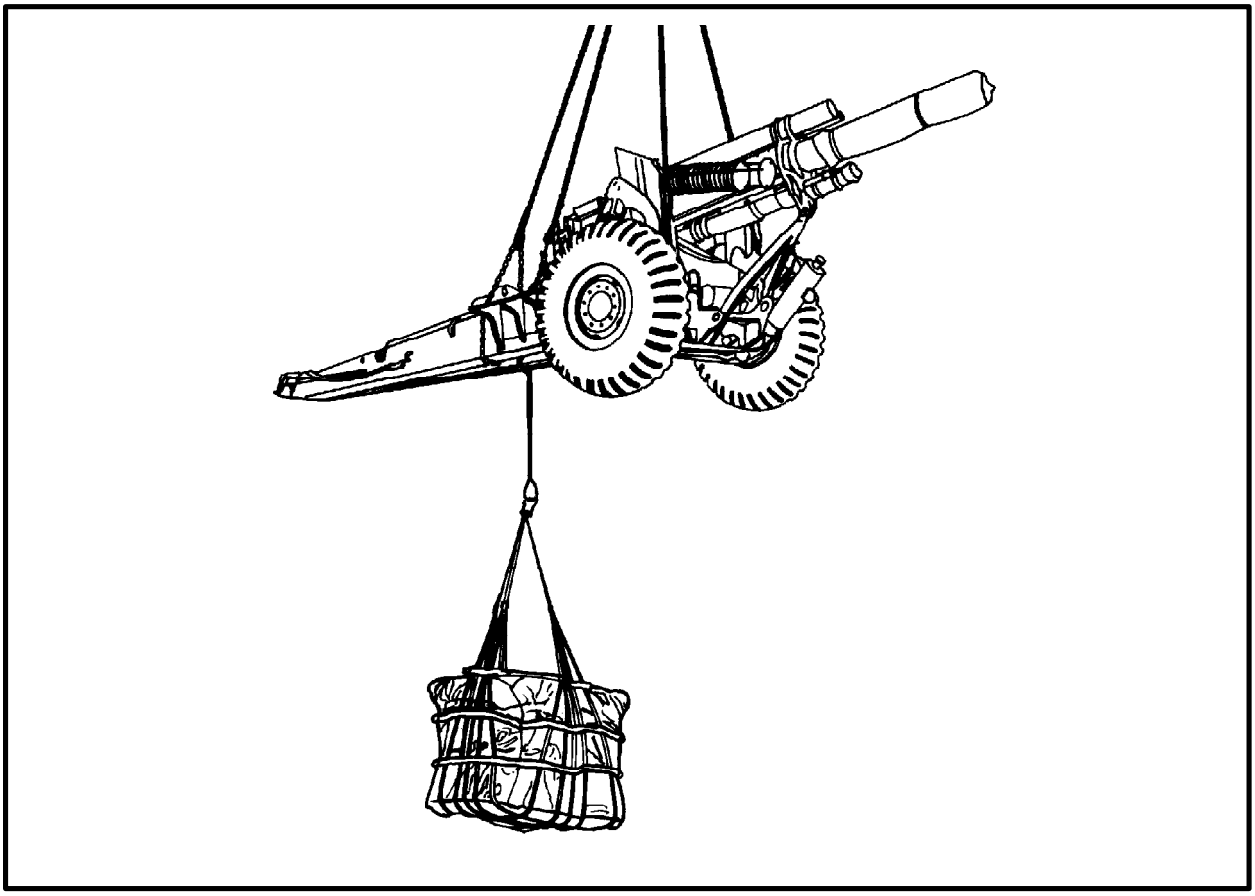

*Figure 5-10. Piggyback/Accompanying Load*

(for example, a howitzer, ammunition, and assigned gun crew). This system eliminates the need for a static wand person because the staticelectricity is discharged when the aircraft lands. Also, all of the equipment, crew, and accompanying ammunition can be moved in one lift. A vertical pendant is connected to the apex fitting of the normally rigged load. A second apex fitting is used on the other end of the vertical pendant to hook to the helicopter (Figure 5-11). A polyester roundsling of suitable capacity or a leg from a 25,000-pound capacity sling set may be used. The helicopter lands next to the rigged load. The hookup man takes the apex fitting, crawls under the helicopter, and places the apex fitting on the cargo hook. The entire crew, to include the signalman and hookup man, waits for the aircrew member to signal them to board the aircraft. Make sure you follow their directions. The aircrew member watches the load and directs the pilot over the load as the aircraft lifts off the ground.

**WARNING**
**The rigged load must weigh less than the capacity of the vertical pendant.**

**WARNING**
**Aircraft must land when using the extended sling system. If the load is on a slope, make sure the area upslope of the load is clear to allow the helicopter to land on the upslope side of the load.**

### 5-9. CARGO HOOK LOADING POLE

Some aircraft are equipped with a cargo hook loading pole (shepherd's hook). Using this pole eliminates the need for ground hookup personnel. The aircrew member uses the pole to pick up the apex fitting and connect it to the aircraft cargo hook as the aircraft hovers over the load. This method is only used on the center hook after coordination with the aviation unit.

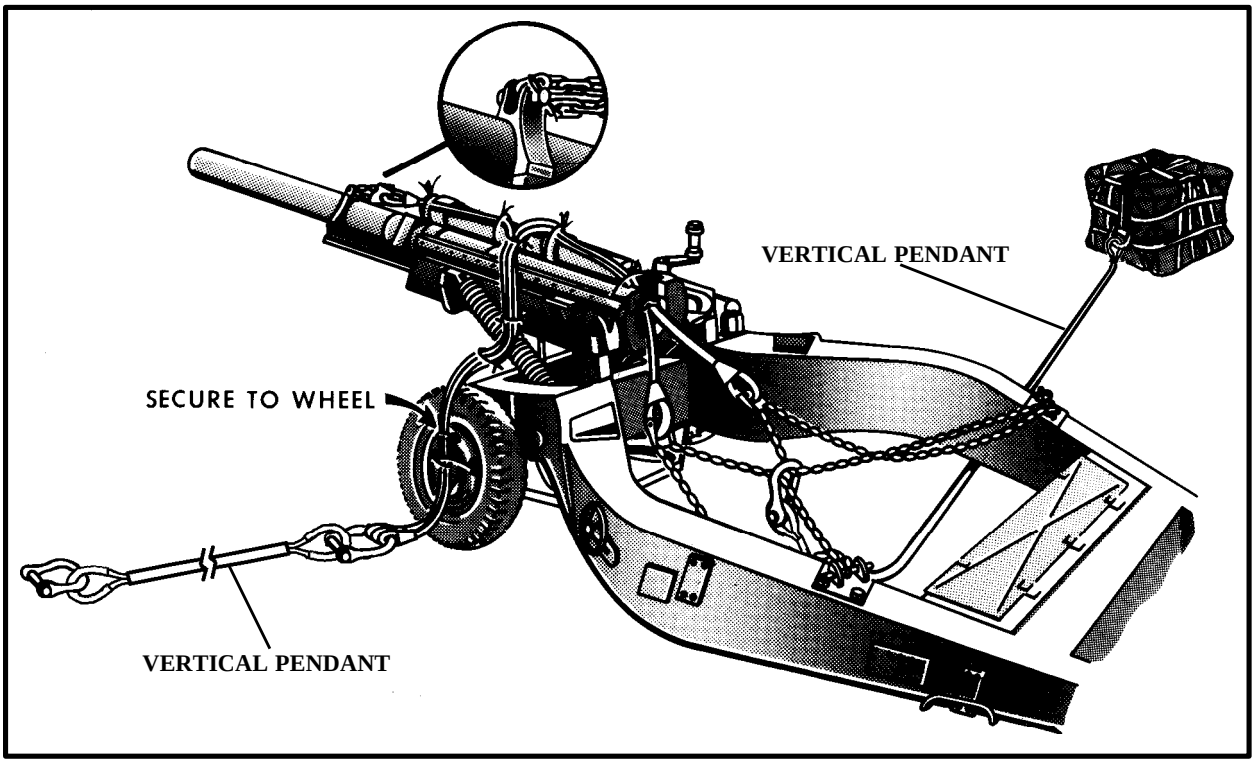


*Figure 5-11. Extended Sling System*

## 5-10. COLD WEATHER OPERATIONS

When helicopter sling load operations are conducted in a cold climate, ground personnel must know cold weather hazards and safetypractices. Cold weather adversely affects personnel performance which increases the hazards of conducting helicopter sling load operations. Personnel could become careless and that could lead to misrigging cargo and improper hookup. Personnel may also be more likely to fall off equipment.

**a. Special Considerations for Operating in Cold Weather.** When conducting sling load operations in cold weather, maintain a high level of combat readiness and morale, by doing the following:

**(1)** Plan ahead. Know the immediate environment, weather conditions, emergency medical procedures, and support sources.

**(2)** Prepare personnel and equipment for cold weather exposure.

**(3)** Use heated shelters, if available. If construction is limited, rotate personnel to a heated shelter. Ten-man tents with a heater can serve this purpose.

**(4)** Ensure ground crew wears required protective equipment. Clothing should provide protection from the elements, including rotor wash, snow, water, and ice particles, without restricting movement of personnel. In order to prevent hands from freezing to cold metal surfaces, personnel should wear anticontact gloves. For the Marine Corps, the cold weather squad survival kit is required for each ground crew team.

**b. Windchill Precautions.** Cold weather causes your body to lose heat through convection and the loss is accelerated as wind velocity increases. The combined cooling effect of wind and cold air is called windchill factor. Table 5-1 shows the effect of wind on temperature. Helicopter rotor wash has the same windchill effect as wind. Arctic windchill near a hovering aircraft can freeze exposed flesh quickly. Personnel must be aware of this hazard and must be briefed on the increased chances of frostbite. All personnel should be trained to recognize the signs of hypothermia and frostbite and how to apply proper first aid.

**c. Static Discharge Precautions.** In dry arctic air, static electricity from a hovering helicopter can produce a large voltage shock. The dry air, colder temperatures, and blowing snow increase the amount of static electricity generated by and stored in the aircraft. Proper grounding of the aircraft's cargo hook is absolutely essential. Snow and low temperatures increase the problem with proper grounding due to snow depth and frozen ground.

**Table 5-1. Windchill Temperatures**

| WIND SPEED (KNOTS) | TEMPERATURE (Degrees Fahrenheit)* | | | | | | | | | | | | | | | |
|---|---|---|---|---|---|---|---|---|---|---|---|---|---|---|---|---|
| | AIR TEMP | 40 | 35 | 30 | 25 | 20 | 15 | 10 | 5 | 0 | -5 | -10 | -15 | -20 | -25 | -30 |
| 3-6 | | 35 | 30 | 25 | 20 | 15 | 10 | 5 | 0 | -5 | -10 | -15 | -20 | -25 | -30 | -35 |
| 7-10 | | 30 | 20 | 15 | 10 | 5 | 0 | -10 | -15 | -20 | -25 | -35 | -40 | -45 | -50 | -60 |
| 11-15 | | 25 | 15 | 10 | 0 | -5 | -10 | -20 | -25 | -30 | -40 | -45 | -50 | -60 | -65 | -70 |
| 16-19 | | 20 | 10 | 5 | 0 | -10 | -15 | -25 | -30 | -35 | -45 | -50 | -60 | -65 | -75 | -80 |
| 20-23 | | 15 | 10 | 0 | -5 | -15 | -20 | -30 | -35 | -45 | -50 | -60 | -65 | -75 | -80 | -90 |
| 24-28 | | 10 | 5 | 0 | -10 | -20 | -25 | -30 | -40 | -50 | -55 | -65 | -70 | -80 | -85 | -95 |
| 29-32 | | 10 | 5 | -5 | -10 | -20 | -30 | -35 | -40 | -50 | -60 | -65 | -75 | -80 | -90 | -100 |
| 33-36 | | 10 | 0 | -5 | -15 | -20 | -30 | -35 | -45 | -55 | -60 | -70 | -75 | -85 | -95 | -100 |
| | | | LITTLE DANGER | | | | INCREASED DANGER (FLESH MAY FREEZE WITHIN 1 MINUTE) | | | | | | GREAT DANGER (FLESH MAY FREEZE WITHIN 30 SECONDS) | | | |

* Degrees Celsius = 5/9(Degrees Fahrenheit - 32)

The grounding rod must be inserted into the ground a minimum of 6 inches. This may require the ground crew to dig out the snow and break up the ground so that the grounding rod can be properly inserted.

**d. Equipment Precautions.** Do not store cargo slings and nets in extremely cold weather for long periods of time. Store them in heated areas, if possible. It is especially important to keep all lifting devices dry in cold weather operations. The coating on the 40,000-pound capacity sling set may become brittle. Slings and nets may also become brittle, reducing their useful life and increasing the chances of sling failure. All sling loads should be moved slightly before pickup to ensure that they are not frozen or otherwise held fast to the surface. If the load is icy, use extreme caution to keep your footing when walking or standing on it, especially during hookup.

**e. Landing Site Preparations.** Information in Chapter 4 also applies to landing site selection considerations in cold weather. Blowing snow from the rotor wash (whiteout) causes a loss of vision for the aircrew and ground crew. Site preparation and marking may deviate from standard operations because of snow conditions (for instance, depth of snow, extent of coverage, presence of ice, frozen ground, and possible low visibility). To prepare a snow covered landing site, follow these procedures:

**(1)** The ground crew determines the depth of the snow in the appropriate locations for helicopter landing points.

**(2)** If time and snow density allow, pack the snow or compress the snow to prevent it from blowing and to provide a solid surface for the helicopter to land.

**(3)** Make sure all personnel remain clear of the rotor blades, as they may be closer to the ground than normal because of the snow height.

**(4)** Probe the snow under the landing point for obstacles such as large rocks, stumps, and uneven or steep terrain which could damage the helicopter. If the area cannotbe cleared for safe landing, select a new landing point.

**(5)** If more than one helicopter will be landing simultaneously, the landing points should be at least 100 meters apart to prevent blowing snow from obstructing the view of other helicopter crews.

**f. Marking the Landing Site.** Marking the landing site and landing points is critical because of the rotor wash which causes blowing or driven snow (whiteout condition). This condition can blind both the aircrew and ground crew. The helicopter crew must be provided with markings to be used as reference points at each landing point.

**(1)** The landing site or point can be marked using conventional panels, GAIL lights, strobe lights, or similar indicators. The area can also be marked by using rescue survival dyes, food coloring (or food items such as Kool-Aid), dirt sprinkled in the snow, or any dark material.

**(2)** A smoke grenade can be used to mark the landing site or point and also to indicate wind direction, but it must be placed on a hard surface to prevent it from sinking or melting into the snow. Do not use white smoke.

**(3)** (USMC) Landing guides are used to guide the pilot to a safe landing or hover at each landing point. Landing guides are ground personnel who stand at the helicopter's 12 o'clock position and act as additional reference points. They do not provide hand-and-arm signals. The landing guides should wear international orange vests and face masks. If landing guides are not available, large, dark colored bags filled with snow and placed in the landing guides' positions may be used as landing point indicators. Advise the aircraft unit as to the depth of snow (packed or unpacked), type of snow (powder, crusted, or hard), and any special considerations that will delay hookup.

## 5-11. DESERT OPERATIONS

Many of the same problems or considerations found in cold weather operations are also present in desert operations. Brownout (loss of vision from blowing sand) presents the same visual and reference problems as whiteout. The procedures of using additional reference points and paddles are considered essential for safe and efficient sling load operations. High temperatures and ex-

cessive dust particles greatly increase the buildup of static electricity. Again, proper grounding is required to adequately protect the ground crew. Drive the grounding rod as far into the ground as possible and wet the area around the base of the grounding rod to increase conductivity.

## 5-12. NIGHT OPERATIONS

**a. General Considerations.** Since it is more dangerous to conduct sling load operations during darkness, extensive training and detailed planning become increasingly important. It is important to realize that certain problems will exist at night that do not occur during daylight operations. Common night problems include increased time required for hookup, tendency for helicopter to drift during hover, and lack of depth perception for crew members and ground personnel. During night operations, hand-and-arm signals are the same as in day operations except that flashlight wands with night vision goggles (NVG) compatible lighting or infrared chemlites are used.

**b. Night Equipment.** Whenever possible, and if the tactical situation permits, personnel should wear reflective vests. At a minimum, the signalman should wear NVG. Chemlights attached to the top of the load assist the aircrew in identifying the load; likewise, a chemlight attached to the cargo hook aids the hookup team during the hookup operation. Some helicopters are equipped with lights positioned by the cargo hook. The aircrew identifies which cargo hook to use by illuminating the corresponding light.

**c. NVG Operations.** The preferred method of conducting night sling load operations is with fully trained ground crews or HST support and with utilization of night vision goggles (NVG). Normal nighttime illumination (white or red lights) can temporarily blind personnel wearing NVG. Therefore, you must use NVG-compatible lights (blue-green) when conducting NVG sling load operations. Infrared chemlights, blue-green chemlights, or flashlights with blue-green lens covers and plastic wands are effective during NVG operations.

## 5-13. SHIPBOARD OPERATIONS AND SAFETY PROCEDURES

**a. Operations.** Helicopter sling load operations aboard ships require a greater level of awareness than shore operations because of the increased hazards. Some of the major hazards are:

**(1)** Confined helicopter operating area.

**(2)** Pitching and rolling decks.

**(3)** Wet and slippery decks.

**(4)** Helicopter rotor wash and ship's movement.

**(5)** Potential of being blown overboard.

**(6)** Increased instability of hovering helicopters due to winds and turbulence.

**(7)** Increased potential of being struck by helicopter rotor blades.

**b. Training.** The most important factor in shipboard sling load operations is thoroughly trained personnel. During shipboard operations, designated ship personnel are responsible for supervising and controlling all sling load operations. On a landing ship dock (LSD), landing helicopter assault (LHA), landing platform helicopter (LPH), landing ship tank (LST), and landing platform dock (LPD), embarked Marines or soldiers are assigned to assist the combat cargo officer (CCO) and the flight deck officer.

**NOTE: Other services' equipment may be different from the Navy's and require different hookup procedures. It may be necessary to request modification of the safety requirements listed in NWP-42, Shipboard Helicopter Operating Procedures. Personnel participating in sling load operations must be thoroughly trained and wear the required protective clothing. In all cases, safety is the primary consideration.**

**c. Types of Operations.** Shipboard operations involve three types of sling load missions: vertical replenishment (see Chapter 9), vertical on board delivery, and logistical missions involving ship-to-shore movement. All of these missions require strict adherence to established shipboard safety procedures.

**d. Planning.** During planning for shipboard sling load operations, the supported unit and transporting unit

should review NAVAIR 00-80T-106, LHA/LPH NATOPS manual; or when sling load operations are to be conducted from an LPD or LSD, review NWP-42. A liaison meeting should be conducted with a representative from the following ship's divisions: operations, air, deck, and combat cargo. A complete inventory of each unit's equipment is contained in the unit's embarkation/debarkation plan and specific equipment that is planned to be lifted by helicopter should be provided to the CCO.

**e. Safety Procedures.** During sling load operations, personnel must be thoroughly trained on safety procedures and wear appropriate protective clothing. During shipboard operations, all personnel must adhere to the following:

**(1)** Strict compliance to signals by the landing signal enlisted (LSE).

**(2)** During hookup, all personnel except the LSE, the hookup man, and static wand person must clear the pickup or delivery area.

**(3)** Flight deck personnel and ground crew must wear approved life jackets, helmets with chin straps and fasteners, goggles, safety shoes, and ear protection. Loose articles of clothing should not be worn. Personnel must remove all loose articles (such as covers and rags) from their pockets.

**(4)** All personnel in the vicinity of the helicopter must remove their soft covers/hats while the helicopter rotors are turning.

**(5)** Observe the aircraft carefully for any sign of malfunction and immediately report any such conditions to flight deck personnel in charge.

**(6)** Personnel must be instructed concerning the danger created when rotor blades strike a solid object.

**(7)** The flight deck must be cleared of all objects which can be blown around by the rotor wash or ingested into the engines.

**(8)** Do not attempt to steady a load or move towards the load until the load is on the deck.

# CHAPTER 6
# CARGO SLINGS

**THIS CHAPTER IMPLEMENTS STANAG 2949**

## 6-1. INTRODUCTION

The various loads described in FM 55-450-4/FMFRP 5-31, VOL II/NWP 42-1, VOL I/AFR 50-16, VOL I/COMDTINST M13482.3 and FM 55-450-5/FMFRP 5-31, VOL III/NWP 42-1, VOL III/AFR 50-16, VOL III/COMDTINST M13482.4 are sling loads that use five different capacity cargo slings. This chapter discusses the characteristics, use, maintenance, and inspection of the 10,000-pound, 15,000-pound, 25,000-pound, and 40,000-pound capacity sling sets along with the aerial delivery slings and multi-loop nylon lines.

## 6-2. REQUEST FOR WAIVERS

Physical characteristics of the four sling sets are shown in Table 6-1. Appendix B contains NSN information for each sling set. Services should submit requests for waivers to their respective points of contact.

USA - Cdr, ATCOM, ATTN: AMSAT-R-EIG, St. Louis, MO 63120-1798

USMC - CG, MCCDC, Quantico, VA 22134-5021 with copy to CG, MARCORSYSCOM (PSE), Quactico, VA 2314-5021

USN - Director, NAEC (Lakehurst), Lakehurst, NJ 08733

USAF - Applicable major command (DO)

USCG - Cmdt (G-OAV), Washington, DC 20330

**WARNING**

**Components of different capacity sling sets are not interchangeable. Sling or load failure may result if components of different capacity sling sets are intermixed.**

## 6-3. 10,000- AND 25,000-POUND CAPACITY SLING SETS

The 10,000- and 25,000-pound capacity sling sets are discussed together because of their similarity. For clarity, only one of the four lifting legs is shown in Figure 6-1. Become familiar with the parts of the sling set and their locations. Both sling sets aresimilar, except for a few minor differences. All parts are clearly marked; take care not to mix up the sets. If a part is damaged, each component of the sling set is replaceable.

**a. Apex Fitting.** The metal apex fitting (Figure 6-2) gathers the sling legs and attaches the sling set to the helicopter hook. Each apex fitting consists of a clevis, pin, spacer, and castelated nut and cotter pin. The 10,000-pound capacity clevis is made of aluminum and uses a 1 1/8-inch diameter pin. The 25,000-pound capacity clevis is made of alloy steel and is fitted with a 1 1/2-inch diameter pin.

**NOTE: The use of any sling load lifting device not listed in this manual is not authorized.**

**Table 6-1. Identifying Characteristics of Sling Sets**

| Identifying Characteristics of Sling Sets | | | | |
|---|---|---|---|---|
| CAPACITY (LB) | 10,000 | 15,000 | 25,000 | 40,000 |
| SLING LEG MATERIAL | Nylon Rope | Nylon Web | Nylon rope | Kevlar Rope |
| LEG COLOR | Olive Drab | Olive Drab | Black | Blue |
| DIAMETER/ WIDTH | 7/8-inch | 1 3/4-inch | 1 1/4-inch | 1 1/8-inch |
| LEG LENGTH | 12 feet | 15 feet | 12 feet | 12 feet |
| APEX FITTING MATERIAL | Aluminum | Nylon Donut | Steel | Steel |
| APEX SPACER | Aluminum | None | Aluminum | Steel |
| LENGTH ADJUSTER | Grabhook | Grab link | Grabhook | Grab link |
| CHAIN LINKS | 110-115 | 64 | 86-88 | 70 |
| CHAIN LENGTH | 8 feet | 6 feet | 8 feet | 8 feet |
| WEIGHT (LB) | 52 | 84 | 114 | 175 |

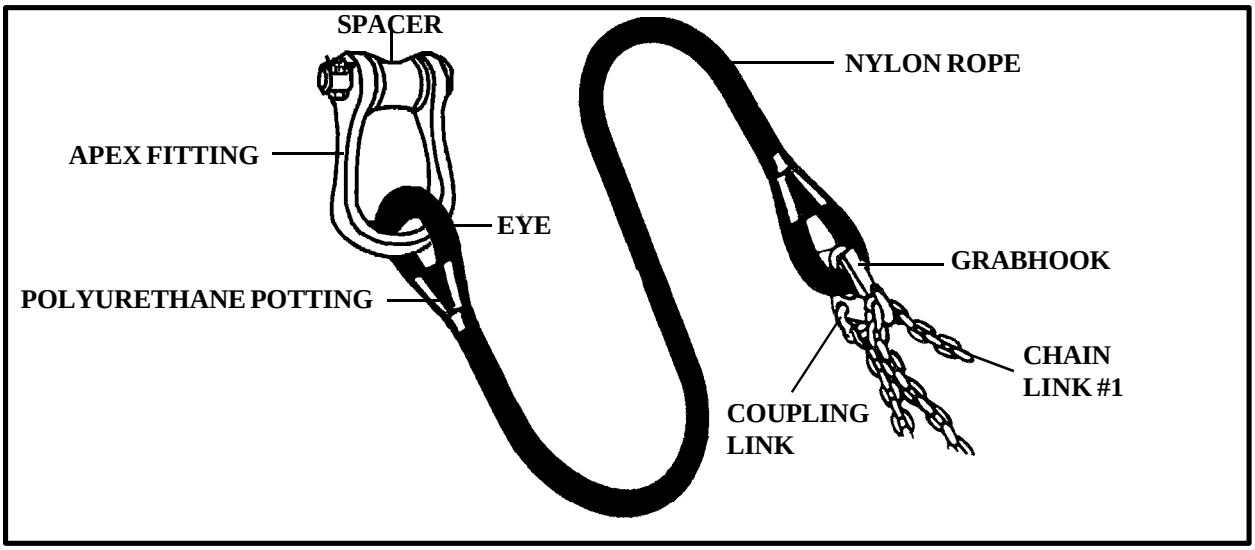


*Figure 6-1. 10,000-and 25,000-pound Capacity Sling Set Components*

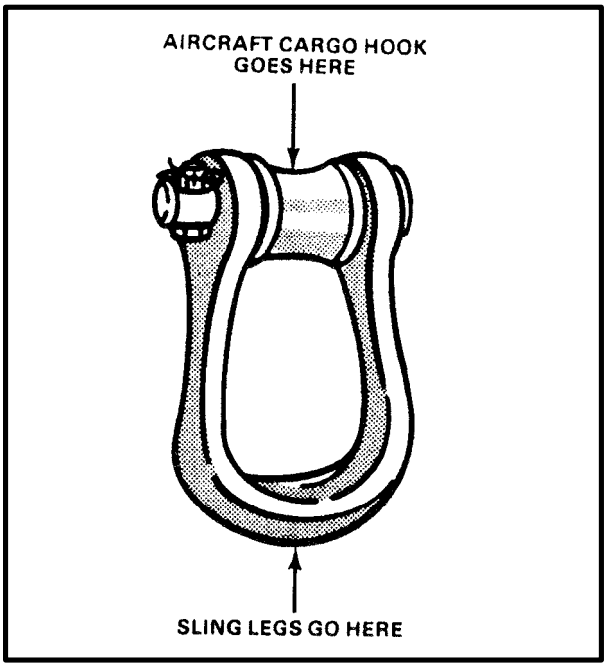


*Figure 6-2. Apex Fitting Components*

**(1)** The pin on both apex fittings is secured with a 3/8-inch bolt and a castellated nut and cotter pin.

**(2)** The castellated nut and a cotter pin are a more positive means of securing the bolt since the cotter pin is easily visible. Tighten the nut until the cotter pin can be placed through a castellation in the nut and the hole in the bolt. Spread the ends of the cotter pin apart to keep the nut from loosening.

**(3)** The apex fitting pin is placed directly onto the cargo hook, except for the UH-1. A 3-foot nylon aerial delivery sling or 10-inch nylon donut must be used between the sling and aircraft hook because of the unique shear pin design on the UH-1 hook. Use a basket hitch to place the 3-foot nylon aerial delivery sling on the apex fitting (Figure 6-3).

**(4)** All new sling sets are furnished with an improved apex fitting assembly which includes an aluminum spacer. This spacer is required on the 10,000-pound capacity apex fitting when the load is lifted by a UH-60 helicopter. The spacer prevents the apex fitting from working under and raising the spring-loaded keeper. The spacer also centers the apex fitting on any cargo hook and reduces the shock load to the cargo hook caused by oscillating and rotating loads. Since these spacers are made of aluminum, some deformation or gouging of the surface is to be expected. This in no way affects the serviceability of the apex fitting. File down any burrs or gouges.

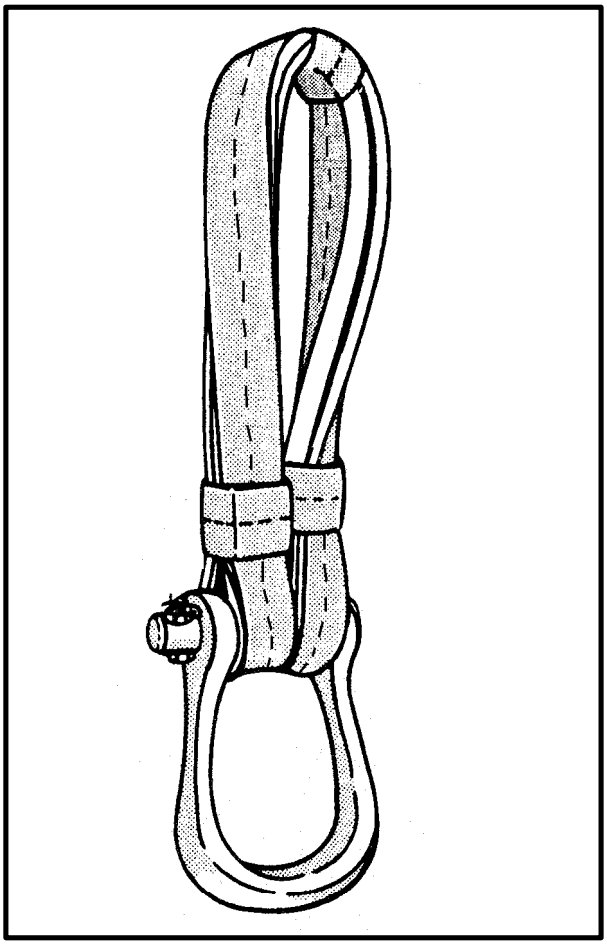

*Figure 6-3. Three-foot Sling, Basket-Hitched on Apex Fitting for UH-1*

**(5)** You can continue to use apex fittings without spacers on other aircraft, but you should update your sling sets by ordering the proper spacer. The 25,000-pound capacity apex fitting with a spacer will not pass through the opening in the UH-60 cargo hook.

**NOTE: The pin always goes up and attaches onto the aircraft cargo hook (Figure 6-4).**

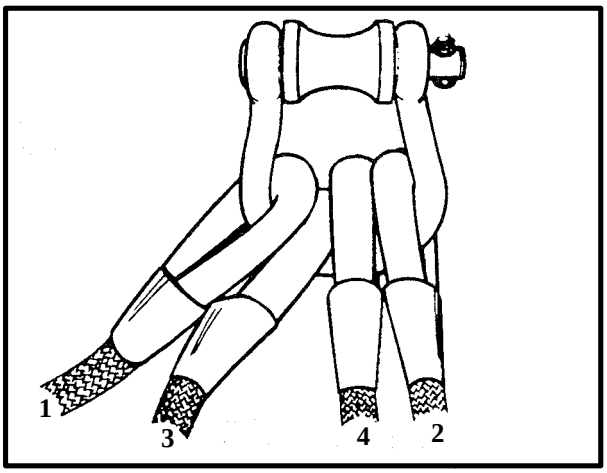


*Figure 6-4. Proper Orientation of Apex Fitting*

**(6)** Four nylon rope legs are usually attached to the apex fitting. Six rope legs can be attached to one apex fitting if the load requires it. In order to keep the sling legs from becoming tangled, sling legs are numbered in the following sequence: 1 and 2 are the outer sling legs, 3 and 4 are the inner sling legs, and if necessary, 5 and 6 are the innermost sling legs (Figure 6-5). Odd-numbered sling legs are connected to the left side of the load; therefore, they are on the left side of the apex. Apex fittings can be interchanged between both sling sets as long as the apex fitting capacity is greater than the load weight. If a load is rigged with only one sling leg, you can attach the top eyelet of the sling leg directly on the cargo hook, eliminating the need for the apex fitting.

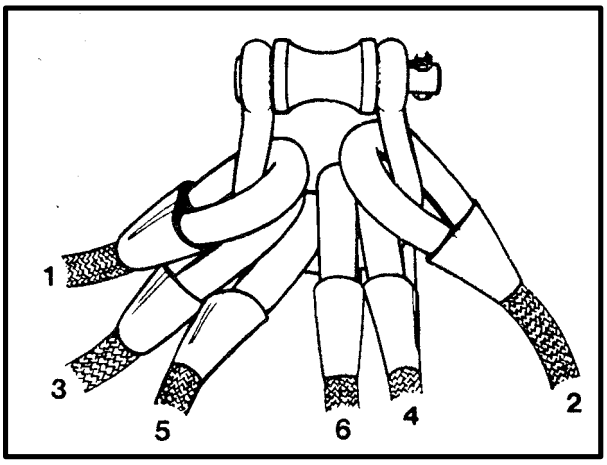


*Figure 6-5. Sling Leg Numbering Sequence*

**b. Nylon Rope Assembly.** The nylon rope assembly is made from double-braided nylon rope with an eye splice at each end. Cutting and splicing of the rope is carefully controlled to produce an assembly which is approximately 12 feet long. During manufacture, the outer braid is covered with a liquid nylon which, when dry, provides protection against scuffing and shields the rope against ultraviolet radiation. This process and other environmental conditions during shipment and storage can result in considerable shrinkage in the rope assembly length. Much of this shrinkage is temporary and the specified length should be restored with use. To ensure proper load distribution, the variation in length of the rope legs used in a sling assembly should not exceed 6 inches. The 10,000-pound capacity sling set has olive drab colored ropes while the 25,000-pound capacity sling [redacted]

**c. Grabhook Assembly.** The grabhook assembly (Figure 6-7) is attached to the lower eye of the nylon rope and attaches the nylon rope assembly to the chain. It is used to adjust the chain length. The upper part of the grabhook (the yoke) contains a pin and spacer that are used to attach the nylon rope to the grabhook. A snap ring holds the pin in place. The spacer provides a large diameter surface for the eye of the nylon rope. The bottom part of the grabhook has an eye at one side. The attached coupling link connects the chain to the grabhook assembly. Opposite the eye is a hook into which any selected chain link is inserted to vary the length of

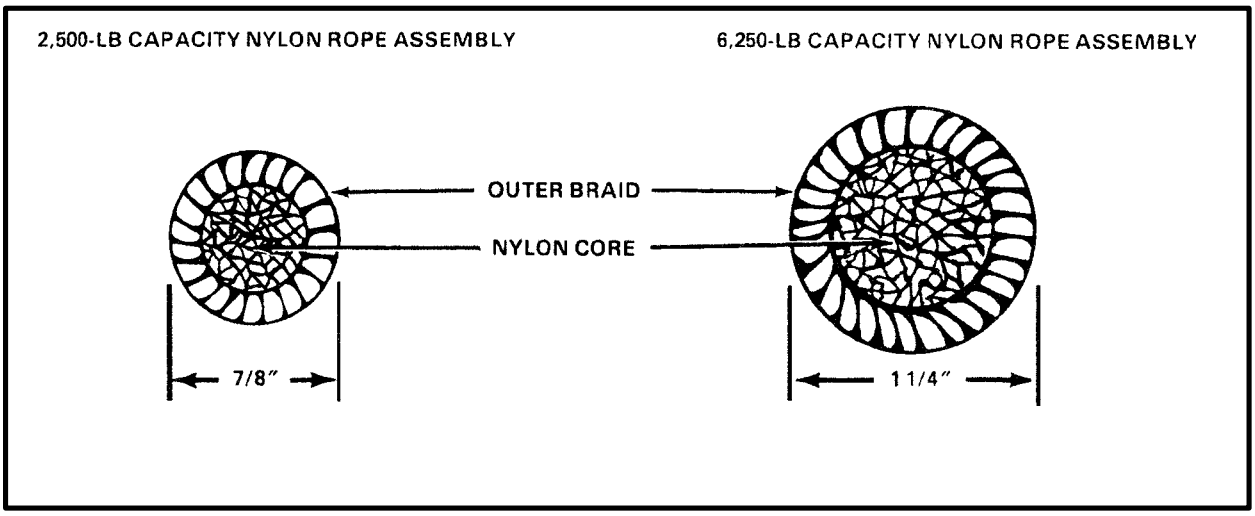


*Figure 6-6. Cross Section View of Nylon Ropes*

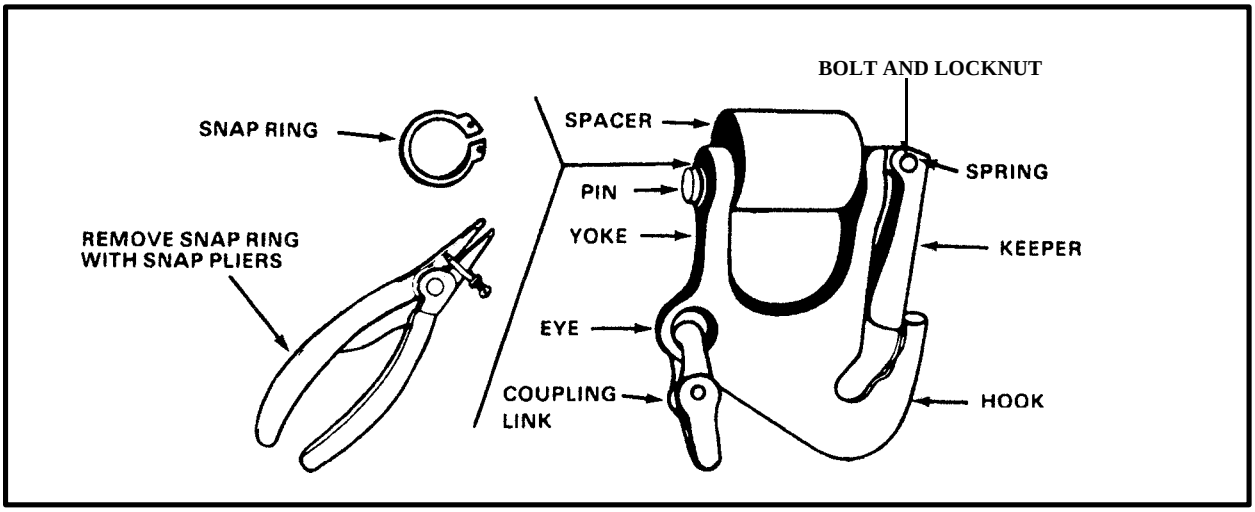


*Figure 6-7. Grabhook Assembly*

the chain loop when rigging a load. The chain is kept in the grabhook by a spring-loaded keeper. The same type of grabhook is used on the 10,000- and 25,000-pound capacity slings; however, the grabhooks are different in size and should not be interchanged. The slot on the 25,000-pound capacity sling set grabhook is too large to adequately secure the chain from a 10,000-pound sling set. The assembly part number and capacity are embossed on the side of the grabhook. The spring-loaded keeper is secured with a bolt and locknut. Grabhooks with roll pins will be replaced with the bolt and locknut to reduce the possibility of losing the keeper and having the chain fall out of the hook. Redrill the keeper using a 13/64-inch diameter drill and install the nut and bolt to upgrade the grabhook. See Appendix B for the bolt and nut NSNs.

**d. Chains.** The welded steel-alloy chains for both sling sets are 8 feet long. Since the chain is used as a loop, this length allows for adjustments from 0 to 4 feet. There are 110 to 115 links in the 8-foot section of the 10,000-pound capacity sling set and 86 to 88 links in the 25,000-pound capacity sling set. The links in the 25,000-pound capacity sling set are larger than those used in the

**WARNING**

**Breakage or other sudden separation at the load (chain) end of the nylon rope leg assembly will result in the rope and chain snapping back, causing damage to the aircraft and possible serious injury to personnel. Riggers must ensure that the attachment points on all equipment are sound and that proper rigging procedures are used. Chapter 8 contains information on connecting sling legs used as vertical pendants.**

10,000-pound capacity sling set. Every tenth link is painted olive drab to help when you count the links. The chain is attached to the grabhook so that the free end will contain 10 links to the first painted link (Figure 6-8). If the tenth link is not painted, you may want to remove the paint from all of the painted links and repaint the links making sure you paint each tenth link starting from the free end. When rigging a load, always count the chain links from the free end. If an additional chain length is required by the rigging procedures, use a coupling link to add it to the existing chain.

**CAUTION**

**Nylon cord or pressure-sensitive tape should be used to secure the excess chain. Tying off the excess links just below the grabhook will help keep the chain in the slot and prevent the chain from damaging the item being lifted. If the rigging procedures prescribe a 10,000-pound capacity sling set, but a 25,000-pound capacity sling set is the only one available, use the conversion table in Appendix C to cross-reference the chain links.**

**WARNING**

**Do not use a 10,000-pound capacity sling set when a 25,000-pound capacity sling set is required.**

**e. Making the Sling Set Fit the Load.** A complete sling set comes with four legs. However, some loads may have more than four lifting provisions and others may have less. The following information explains in detail how to add or remove legs from either sling set.

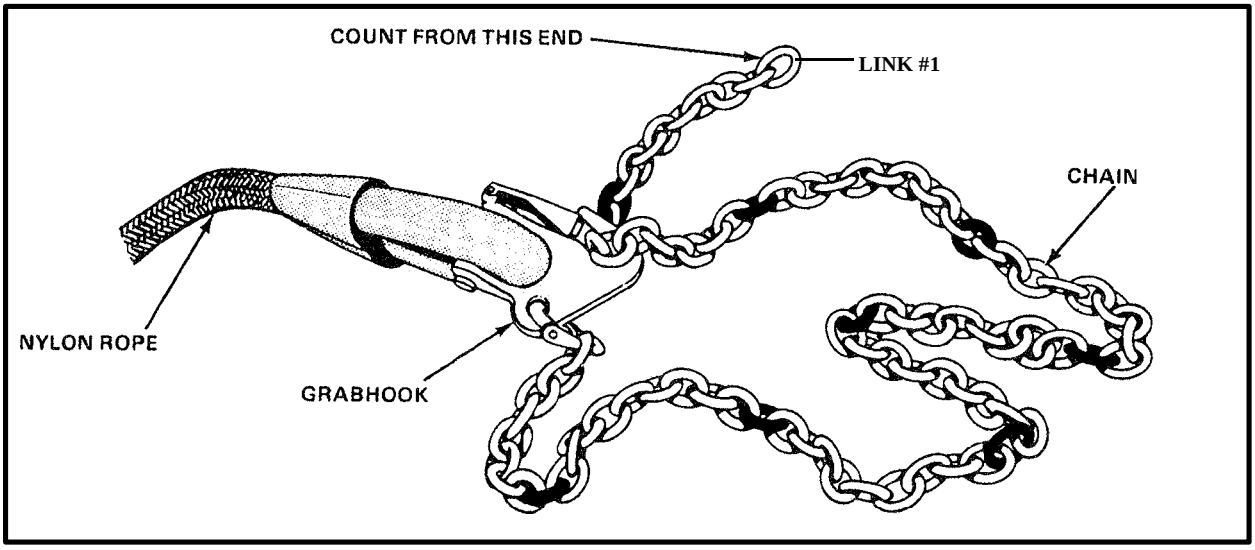


*Figure 6-8. Chain Attached to Grabhook by Coupling Link*

**(1)** The overall capacity of the sling set changes as we add or subtract sling legs. If you add legs to a sling set, the capacity of the clevis does not change. Therefore, a six-legged 10,000-pound capacity sling set will still safely carry only 10,000 pounds. If one leg is removed, the 10,000-pound capacity set will be able to carry only 7,500 pounds while the 25,000-pound capacity sling set can carry 18,750 pounds.

**WARNING**

**Each of the four legs of the 10,000- and 25,000-pound capacity sling sets will carry only one-fourth of the overall capacity of the set.**

**(2)** You may rig a load such as a fuel drum that has only two lift points. In this case, run two chains through each hookup point. This will allow the full capacity of the sling to be used. If the load is less than half the capacity of the sling set, you can use just two sling legs, one leg to each hookup point as shown in Figure 6-9.

**(3)** You may also use this method when hooking up a load with only three lift points (Figure 6-10). Route the extra chain leg through one of the hookup points and use the same chain link number. You will be less likely to lose the fourth sling leg, and the sling set will be ready for another load.

**(4)** Some loads use six lift provisions. Figure 6-11 shows that the apex fitting was disassembled and two additional legs were added.

**(5)** Remember, this sling set can still only transport 10,000 pounds of cargo. Even though the six sling legs could carry 15,000 pounds, the apex fitting can only carry 10,000 pounds.

**(6)** Some loads can be carried in the dual-point configuration. Dual-point loads require an additional apex fitting for the extra sling set (Figure 6-12).

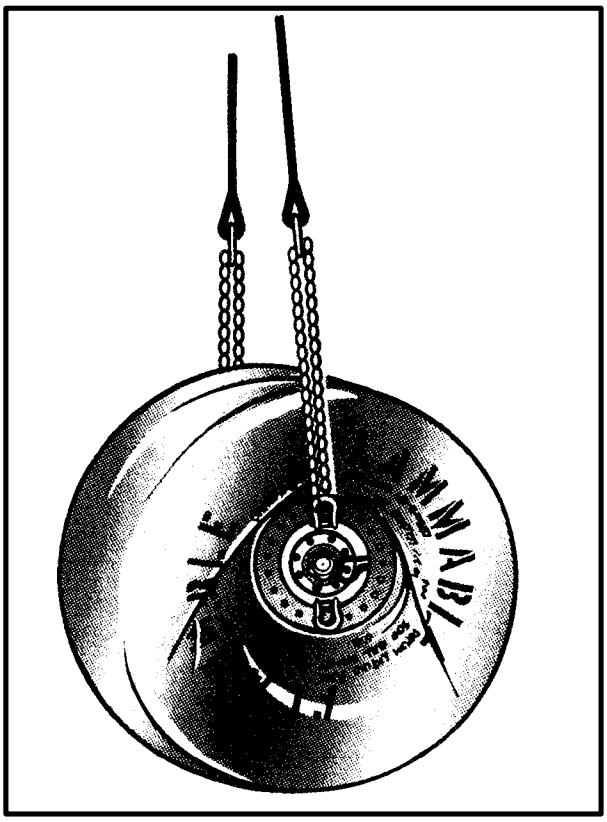

*Figure 6-9. Load with Two Lift Points*

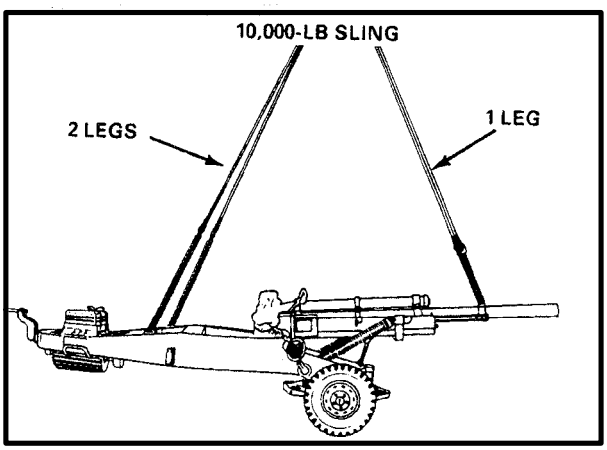


*Figure 6-10. Load with Three Lift Points*

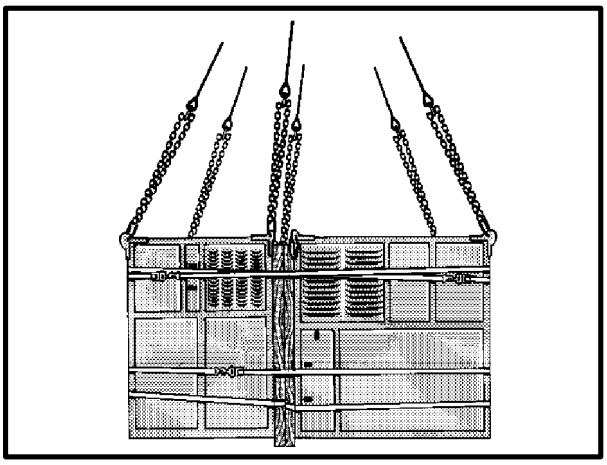

*Figure 6-11. Six-leg Sling Set*

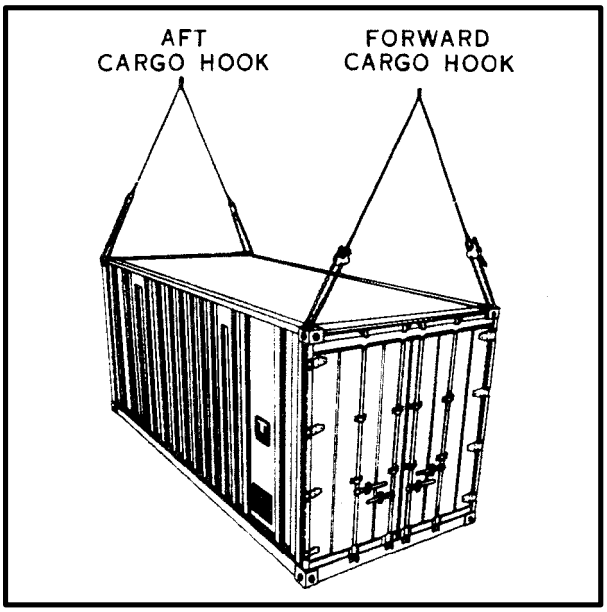


*Figure 6-12. Dual-Point Load*

**f. Adding or Subtracting Sling Legs.** Follow these five steps when adding or subtracting sling legs:

**(1)** Remove cotter pin and nut from the apex fitting pin bolt.

**(2)** Remove the bolt from the pin (Figure 6-13).

**(3)** Pull the pin and spacer out of the clevis.

**(4)** Add or remove the sling legs as required.

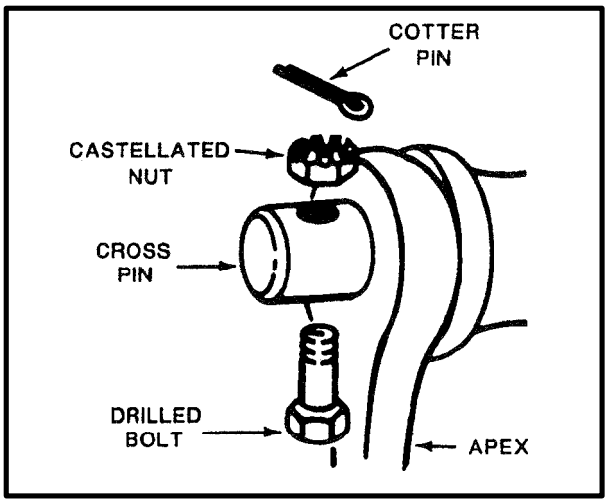


*Figure 6-13. Bolt Assembly*

**(5)** Place the apex fitting spacer in the clevis opening. Install the pin, bolt, and nut and secure with the cotter pin.

**CAUTION**

**Check to make sure the nut is tight and the cotter pin is installed on the castellated nut before every lift.**

**NOTE: If the nylon rope portion of the sling leg is severely damaged, you must replace the nylon rope assembly of the sling. Besides removing one end from the apex fitting, you must also remove the other end from the grabhook assembly. When replacing a nylon rope, make sure the replacement rope length is within 6 inches of the other sling legs.**

**g. Disassembling the Grabhook Assembly.** The following steps explain how to replace a rope assembly or component of the grabhook assembly. Disassemble the keeper and pin as follows:

**(1)** Using a pin punch and hammer, drive out the roll pin. If the roll pin has been replaced by a bolt and nut, unscrew the nut and remove the bolt (Figure 6-14).

**(2)** Tilt the grabhook and remove the spring and keeper (Figure 6-15).

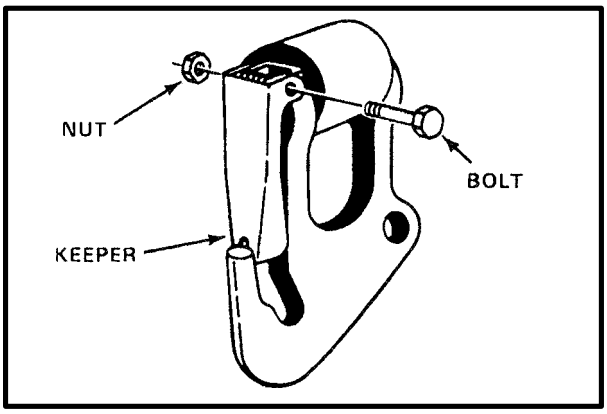


*Figure 6-14. Removing Bolt and Nut from Grabhook*

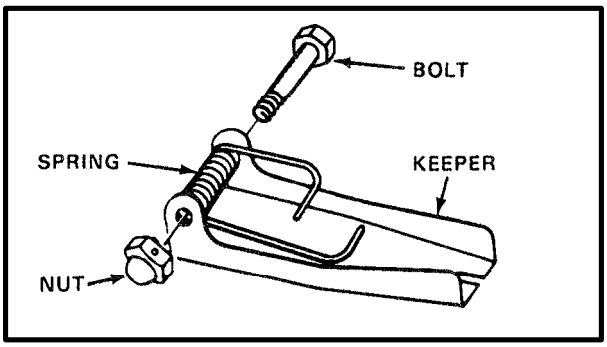


*Figure 6-15. Spring-Keeper Assembly*

**(3)** Remove the snap ring that secures the pin. Do not over-expand the snap ring because this may cause it to break or not spring back into shape.

**(4)** Remove the pin and the spacer bar.

**(5)** Replace the sling leg, if necessary.

**h. Reassembling the Grabhook.** Reassemble the grabhook as follows:

**(1)** Place the spacer inside the sling leg eyelet and position the sling leg in the grabhook opening. Install pin through grabhook and spacer so the head of the pin is on the keeper side. Reinstall the snap ring. Do not reuse a snap ring if it does not seat uniformly into the snap ring groove.

**(2)** Position the long end of the keeper spring against the inside edge of the keeper with the short end against the pin.

**(3)** Position the small end of the keeper so that the notch cut is centered on the protruding portion inside the hook. Push down on the other end of the keeper to align the holes.

**(4)** Use a pointed tool, such as an ice pick or awl, to help align the spring, grabhook, and keeper. Slowly withdraw the tool as you install the roll pin or bolt.

**(5)** Install the nut on the bolt. Do not overtighten the nut because the keeper must be free to move.

**i. Removing and Reinstalling Coupling Links.** Removing and reinstalling the coupling link is a simple operation. Use a hammer and a small pin punch to remove the securing pin from the coupling link or hammer lock. A spring inside the spacer secures the pin. Drive out the pin. Reassemble the coupling link in reverse order of disassembly. Replace the coupling link if the spring does not secure the pin inside the spacer. Figure 6-16 shows the coupling link that is used to attach the chain leg to the grabhook.

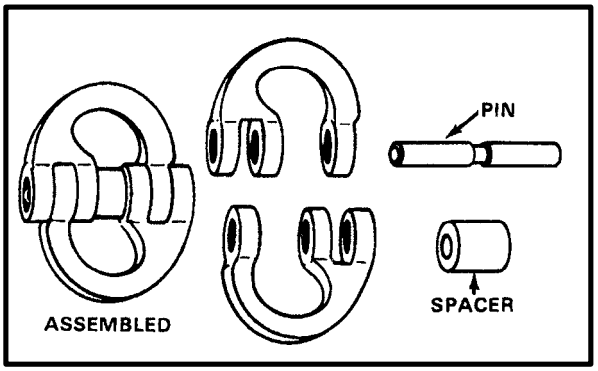


*Figure 6-16. Coupling Link*

**j. Sling Set Proof Load Testing.** Neither initial nor periodic proof load testing of the 10,000- and 25,000-pound capacity sling sets is required to be performed by using units. Each sling set component is proof load tested by the manufacturer before delivery. In addition, breaking strength testing of the rope assemblies is done on a sampling basis. Proof load testing of repaired sling sets is not required since the only authorized repair is by replacement of tested components. The above proof testing satisfies the requirements of Army TB 43-0142 for the 10,000- and 25,000-pound capacity sling sets. If these slings are inspected according to the requirements

of the next paragraph and Table 6-2 that follows, there should be no fear of dropping a sling load through failure of the sling components.

**k. Sling Set Inspection.** Inspect the sling set by using the procedures in TM 10-1670-295-23&P. Table 6-2 is a guide to assist in determining the type of damage on a sling set.

**(1)** Before using a sling set, inspect all metal components for proper operation, rust, corrosion, cracks, bends, distortions, burrs, sharp edges, grease, oil, acid, or foreign matter. Check for any missing components. If bends, cracks, distortions, or other damages are present, the sling cannot be used until you have compared the damage with the damage criteria chart. Replace any components that are damaged beyond the allowable limit.

**(2)** Determining the servicability of the sling legs is the most difficult and important part of inspecting the sling set. Serious damage or weakening of sling legs can occur without visual damage to the fibers. Ropes that are known to have been severely overloaded or shock loaded, such as the remaining legs of a sling set after one leg has broken, should be removed from service. Ropes can also be severely weakened by exposure to certain chemicals. Ropes with rust stains or stains of unknown origin should be removed from service. Each sling leg should be individually inspected for cuts, snags, or worn strands. Pulled strands should be worked back into the rope. The outer braid of the leg is constructed with 24 strands which allows for a certain amount of damage as listed in Table 6-2. No damage to the core braid is allowed. Some fuzziness on the outer surface of the nylon leg is normal. If surface roughness increases or nylon slivers or splinters are present, remove the leg from service. If any doubt exists as to the condition of the sling leg, remove it from service.

**(3)** Each link of the chain should be inspected for damage such as denting, bending, and stretching. If any link is damaged, the complete chain section must be replaced. This type of damage will normally occur where the links contacted the load lift provision where the chain was inserted in the grabhook. The best time to inspect the chain is when derigging a load.

**l. Sling Set Care and Storage.** The ground crew or unit personnel may perform maintenance on the 10,000- and 25,000-pound capacity sling sets. The sling sets are inspected by the user before and after each use. At the present time, these sling sets have no predetermined service life. The six basic steps to prepare slings for storage at the organizational level are as follows:

**(1)** Wash off dirt and corrosive fluids with a mild detergent or hand soap.

**(2)** After washing, rinse thoroughly and then air dry the sling sets. (Do not wring water out of the rope nor dry the legs in the sun.)

**(3)** Remove corrosion from metal parts with a wire brush or emery cloth.

**(4)** Remove burrs or sharp edges from metal parts with a file.

**(5)** Replace any defective components.

**(6)** Store the sling sets in the aviator's kit bag that is furnished with each sling set. Store the sling sets in a dry area that has good air circulation. Do not store the sling sets in direct sunlight or on concrete floors. Store them on wooden pallets if possible, because air can circulate under and around the slings.

**m. Quality Deficiency Report.** Misuse or poor workmanship can cause equipment to break or malfunction. To help identify these problems, the user must inform the materiel developer/procurer of any malfunctions using Standard Form 368 (Quality Deficiency Report) according to DA Pam 738-750. All services should submit reports on equipment failures and/or recommendations for improvements to the sling sets or any associated equipment to Commander, US Army Troop Command, ATTN: AMSAT-I-MDO, St. Louis, MO 63120-1798.

## 6-4. 15,000-POUND CAPACITY NYLON AND CHAIN MULTILEG SLING SET

The 15,000-pound multileg cargo sling (nylon and chain leg) has four sling legs (Figure 6-17). Each sling leg is comprised of 15 feet of nylon strap, a grab link, and 6 feet of chain. At one end of the nylon leg is a nylon web ring which attaches the sling set to the aircraft cargo hook. All four sling legs are held together by the nylon

**Table 6-2. Damage Criteria Chart**

| DAMAGE CRITERIA (10,000 and 25,000 pound sling set) | | | |
|---|---|---|---|
| **COMPONENT** | **TYPE OF DAMAGE** | **EXTENT OF DAMAGE** | **CORRECTIVE ACTION** |
| 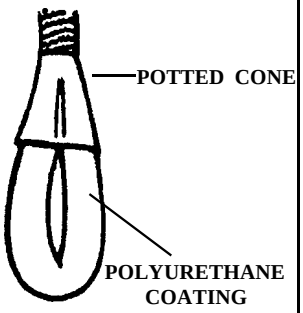 | Cuts or rubs in polyurethane coating. | No set amount or distance of cut. This tubing is meant to keep the eye clean. | Inspect closely for damage to rope. |
| 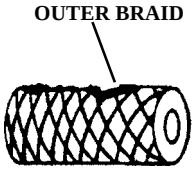 | Rubs or frayed strand. | Strands 50% worn thru on each yarn thickness over 3" on 10K or 5" on 25K sling leg. | Replace if damage exceeds this criteria. |
| 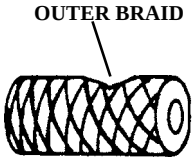 (24 STRANDS IN BRAID) | Cuts on external braided rope. | Not exceeding 3 strands cut through. | Replace if damage exceeds criteria. |
| 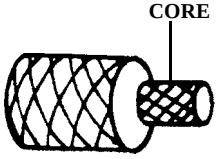 | Deep cut thru outer braid into core. | No allowable damage if any cut goes thru to the core. | Replace the nylon leg. |
| GRABHOOK 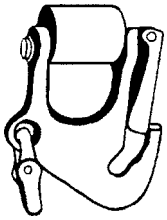 | Spreading of the chain hook. | None | Replace grabhook. |
| | Bending the chain hook. | None | Replace grabhook. |

**Table 6-2. Damage Criteria Chart (Continued)**

| DAMAGE CRITERIA (10,000 and 25,000 pound sling set) | | | |
|---|---|---|---|
| **COMPONENT** | **TYPE OF DAMAGE** | **EXTENT OF DAMAGE** | **CORRECTIVE ACTION** |
| 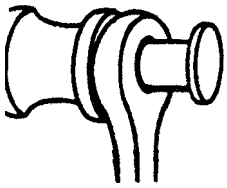 SECURING PIN | Bent or burrs. | None | Replace or file burrs. |
| 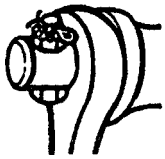 SECURING PIN - SLOTTED NUT - DRILLED BOLT | Bolt bent or broken. | None | Replace. |
| | Nut missing. | None | Replace. |
| | Cotter pin missing or broken. | None | Replace. |
| SNAP RING | Broken or bent. | None | Replace. |
| | Not fully seated. | None | Replace. |
| 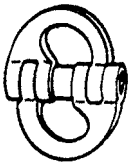 COUPLING LINK | Pin loose or burrs. | None | Replace. |
| | Locking spring broken. | None | Replace. |
| 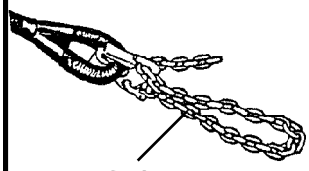 CHAIN | Dent. | 1/8 inch | Replace chain. |
| | Bent link. | None | Replace chain. |
| | Burrs. | Outside of link only. | File burrs. |
| | Wear. | 1/16 inch | Replace chain. |
| | Stretch. | If chain length exceeds 8 foot 3 inches. | Replace chain. |

**Table 6-2. Damage Criteria Chart (Continued)**

| DAMAGE CRITERIA (10,000 and 25,000 pound sling set) | | | |
|---|---|---|---|
| **COMPONENT** | **TYPE OF DAMAGE** | **EXTENT OF DAMAGE** | **CORRECTIVE ACTION** |
| 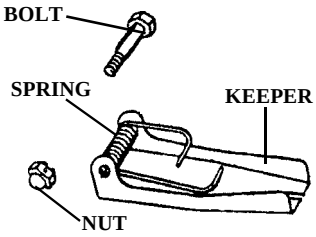 | Roll pin. | None | Replace with nut and bolt. |
| | Keeper bent or broken. | None | Straighten or replace. |
| 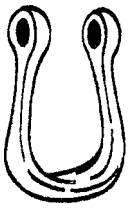 | Bent. | None | Replace. |
| | Burrs. | 1/8 inch maximum depth. | File small burrs smooth. If burrs exceed 1/8 inch replace apex. |

web ring. Legs may be added or removed as necessary. It is important that you become familiar with each part of the sling set and where it is located.

**NOTE: Army units using multileg sling sets are required to obtain a wavier from Cdr, ATCOM, ATTN: AMSAT-R-EIG, St. Louis, MO 63120-1798.**

**a. Nylon Web Ring.** The nylon web ring has a maximum capacity of 15,000 pounds. Figure 6-18 shows that the web ring is held together by a connector link. A cotton/nylon buffer, sewn on the inside of the nylon web strap, helps prevent wear to the ring. There are also cotton/nylon buffers sewn to the inside of each end of the sling leg. Figure 6-18 shows the four legs attached to the web ring. Notice how the nylon loops of the sling leg are positioned under the retainer strap to prevent the legs from moving around the web ring.

**b. Nylon Sling Leg.** The maximum capacity of each sling leg is 5,560 pounds. Each sling leg is made from a nylon web loop, 15 feet long, that is connected to itself by a connector link (Figure 6-19). The connector link is the same type link that is used on the web ring. The separate nylon plies are held together by five web keepers. Three of the keepers are sewn to the nylon loops and the other two are called floating web keepers. The floating web keepers are located at either end of the nylon leg where they can slide back and forth to act as a cinch. All web keepers are held together by a no-sew fitting as shown in Figure 6-19.

**c. Grab Link Assembly.** The next item on the sling set, the metal grab link, is attached to the lower end of the nylon web sling leg. This grab link is equipped with a spring-loaded keeper as shown in the inset of Figure 6-20. At the lower end of the grab link you will see the coupling link that is used to connect the chain leg to the grab link.

**d. Chain Assembly.** The last part of the sling set is the 6-foot chain which has 64 links. These links are used to vary the length of the sling legs. To accommodate the load, leg length is adjusted by passing the free end of the chain through the attachment point on the load and then through the wide end of the grab link until the desired length is obtained. Then the chain link that is in the grab link is slipped past the spring keeper and

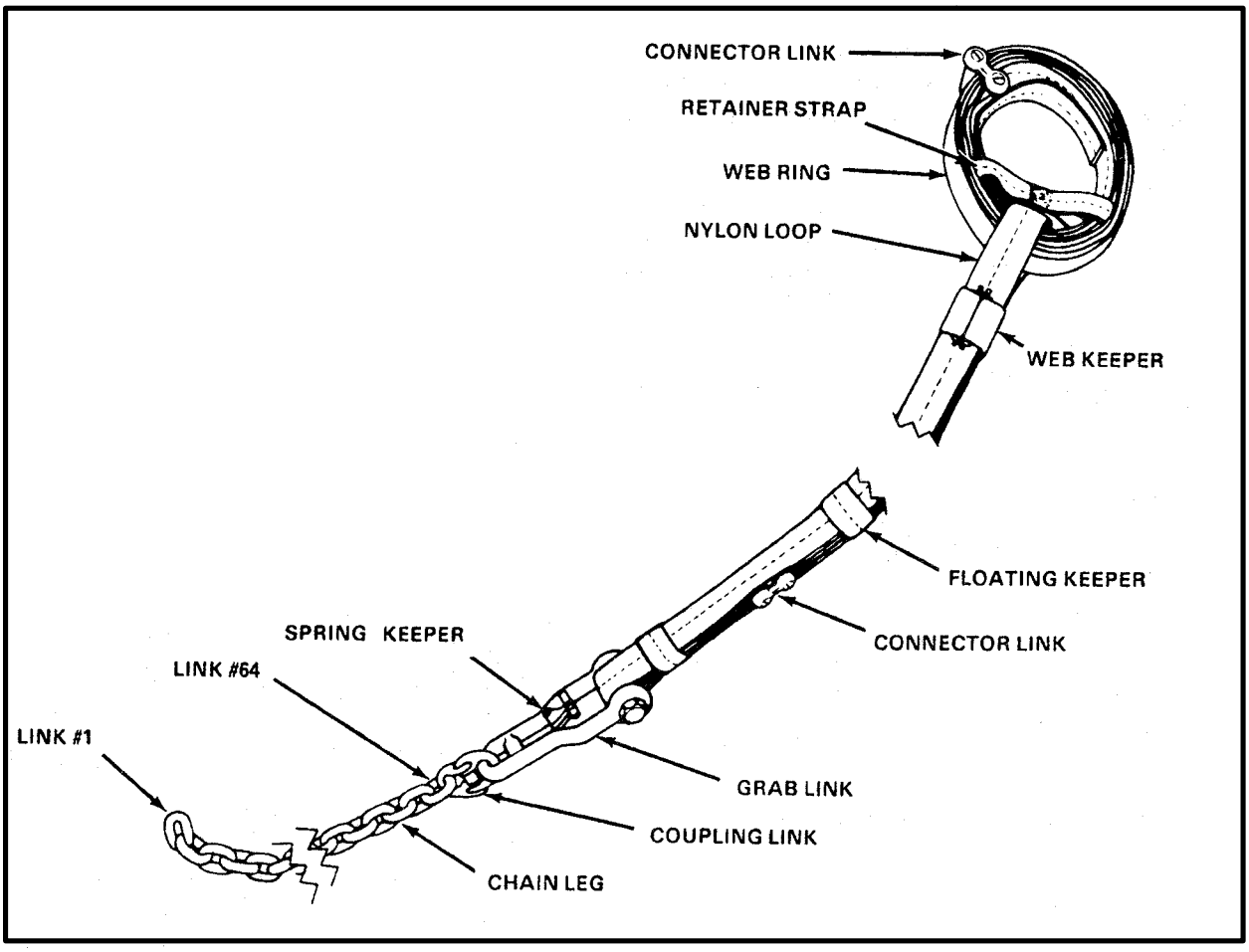


*Figure 6-17. 15,000-Pound Capacity Multileg Sling Set*

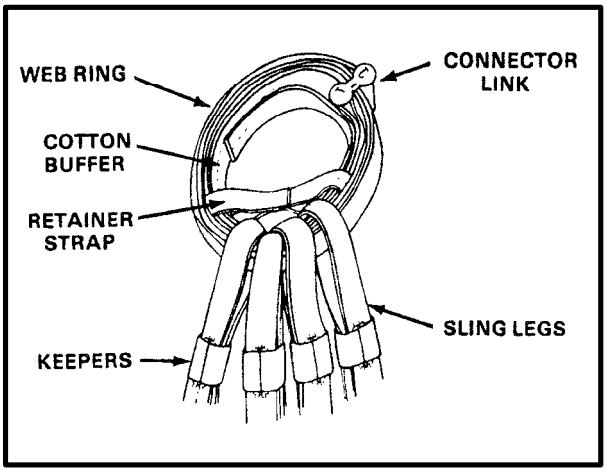


*Figure 6-18. Legs Assembled on Web Ring*

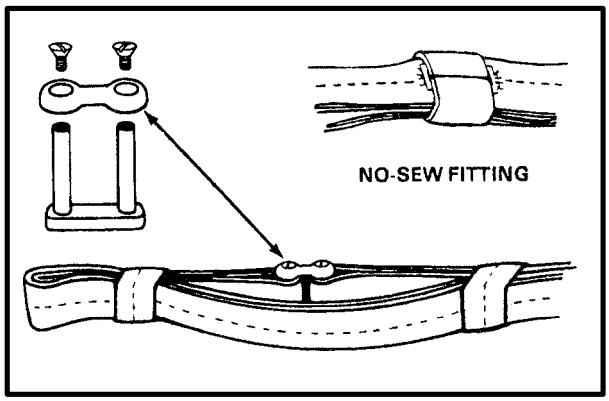


*Figure 6-19. Connector Link*

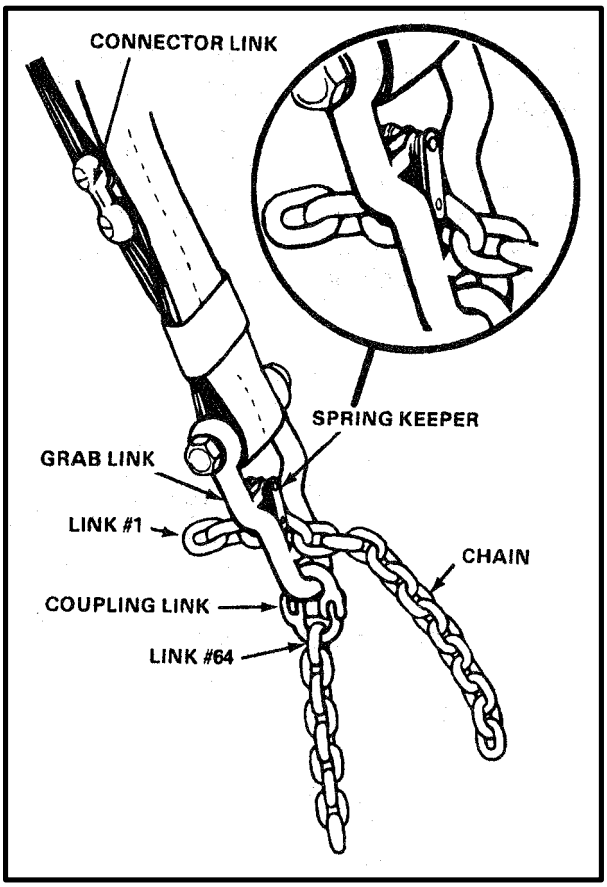


*Figure 6-20. Grab Link with Spring Keeper*

into the narrowend of the grab link. The chain is held in this position by the locking action of the chain links on either side of the grab link and prevented from slipping out of the grab link by the spring keeper. The leg length is determined by counting the number of links from the free end of the chain and fastening this link in the grab link.

**e. Making the Sling Set Fit the Load.** A complete nylon and chain sling consists of four legs. However, legs may be removed to make a two- or three-legged sling (Figure 6-21). The safe working capacity of a two-, three-, and four-legged sling set is 11,120, 15,000 and 15,000 pounds respectively. The capacity of the multileg sling set is different from other sling sets because of the sling leg design. The six steps for adding or subtracting a sling leg are as follows:

**(1)** Remove the two screws and end bar from the web ring connector bar (Figure 6-22).

**(2)** Remove the two free ends of the web ring strap and unwind the web strap.

**(3)** Remove the retainer strap and add or remove sling legs as required.

**(4)** Install the retainer strap over the web strap.

**(5)** Place the free ends of the web strap over the open posts of the connector link.

**(6)** Install the end bars and tighten the two screws.

**f. Inspection.** The unit can conduct its own inspection. Each nylon and chain multileg sling must be marked with 1-inch letters showing the date that the set was first placed in use (Figure 6-23). This means the first day the sling is used, not the day of issue. The marked date is used in determining when the next required inspection is due. Although the slings are routinely inspected before and after each use, they must be thoroughly inspected every 6 months.

**(1)** If the sling is found satisfactory for further use, the old date is marked over and the new date applied. The date can be the calendar date or Julian date as shown in Figure 6-23. The dates will be applied using either orange-yellow parachute marking ink, orange tube-type marker, strata blue parachute marking ink, or strata blue tube-type marker. If the old date was marked with strata blue, mark over the area with strata blue ink and apply the new date using orange-yellow ink. Do just the opposite if the old date was marked with orange-yellow ink. Only one date should appear on the sling. An alternate method for recording the inspection date is to attach a metal tag to the sling set to identify the last inspection date.

**(2)** If the sling is unserviceable, stencil "unserviceable" on it and dispose of it through supply channels. The sling set is unserviceable if one of the following defects is found:

**(a)** Three or more consecutive broken and/or loose stitches (Figure 6-24).

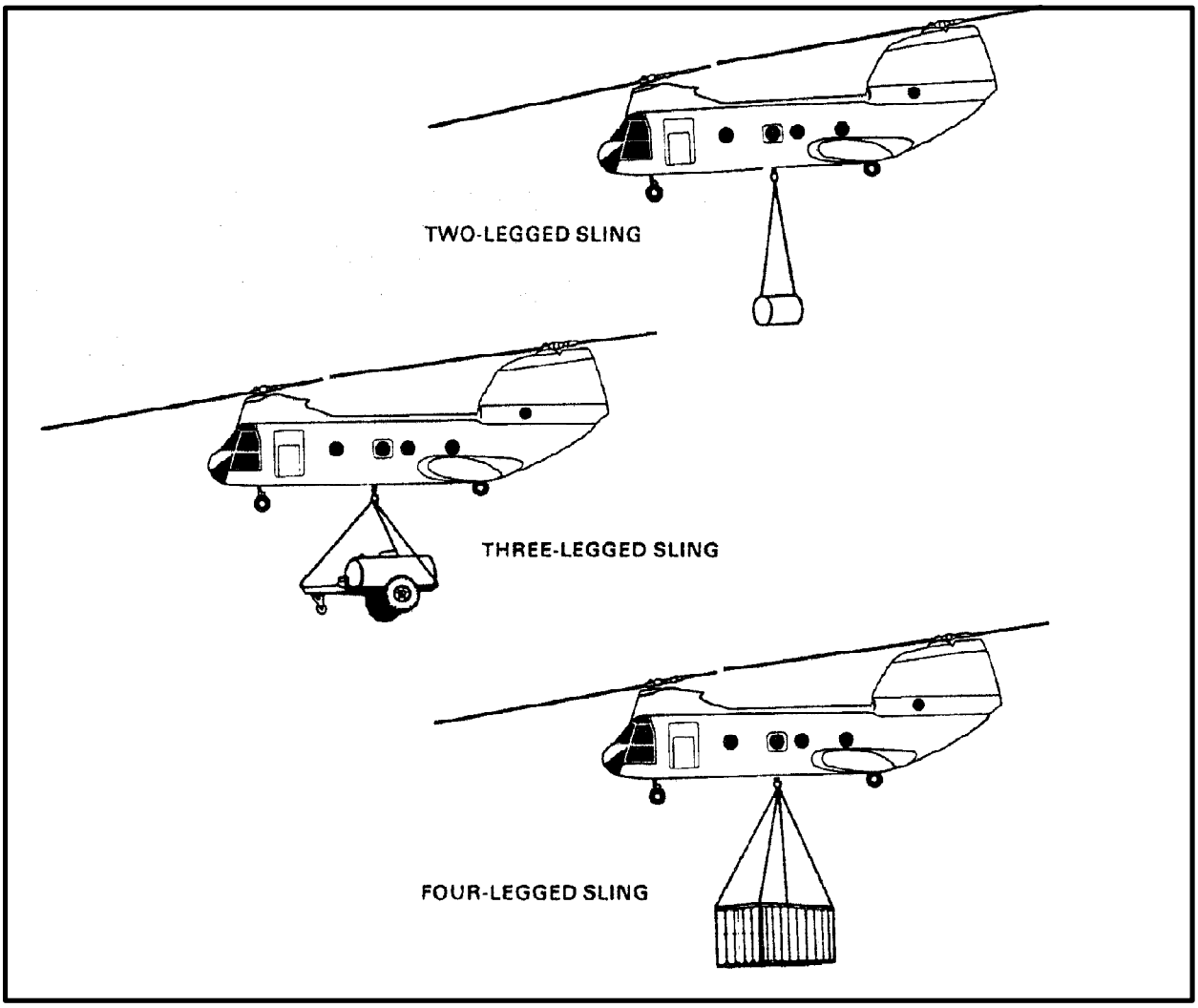


*Figure 6-21. Slings with Two, Three, and Four Legs*

**(b)** Five or more broken and/or loose stitches on a sling leg.

**(c)** Foreign matter such as rust that cannot be removed.

**(d)** Fraying, including broken webbing strands.

**(e)** Excessive wear or fusing indicated by unusual hardening or softening of webbing fibers.

**(f)** Cuts or broken strands of the nylon webbing.

**(g)** Any heavy oil stains or mildewed areas.

**(h)** Any missing parts such as buffers, sliding keepers, or permanent keepers.

**(i)** Metal items should be inspected for rust, corrosion, cracks, bends, distortion, burrs, sharp edges, grease, or any other foreign matter. Any bends, cracks, or distortions will render that item unserviceable.

**g. Numbering the Sling Legs.** The sling legs are numbered to allow easy identification of each leg in the

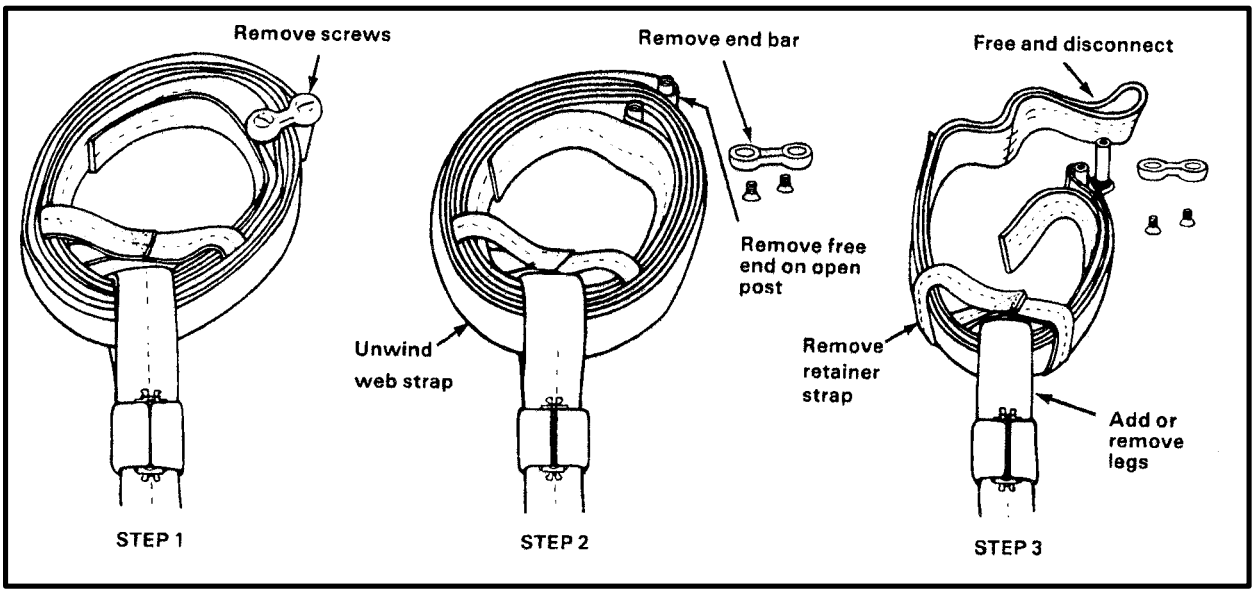


*Figure 6-22. Taking Apart the Ring*

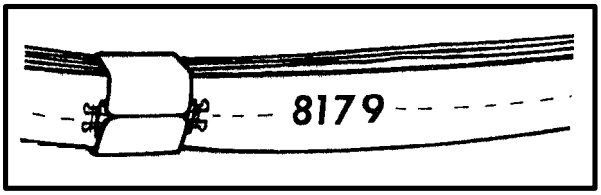


*Figure 6-23. Sample Inspection Date Marking*

sling set (Figure 6-25). This numbering sequence is designed to prevent the legs from crossing each other and causing the load to twist during flight. The correct positioning of the sling legs, legs 1 and 2 to the front and 3 and 4 to the rear, will help stabilize the load during flight.

**h. Maintenance.** The sling set has no predetermined service life.

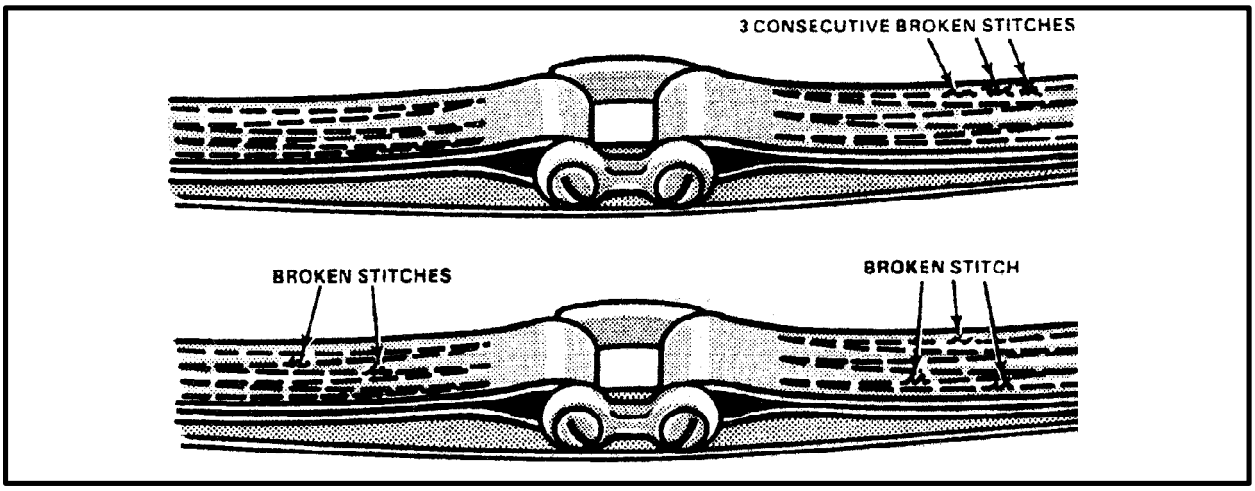


*Figure 6-24. Sling with Broken and Loose Stitches*

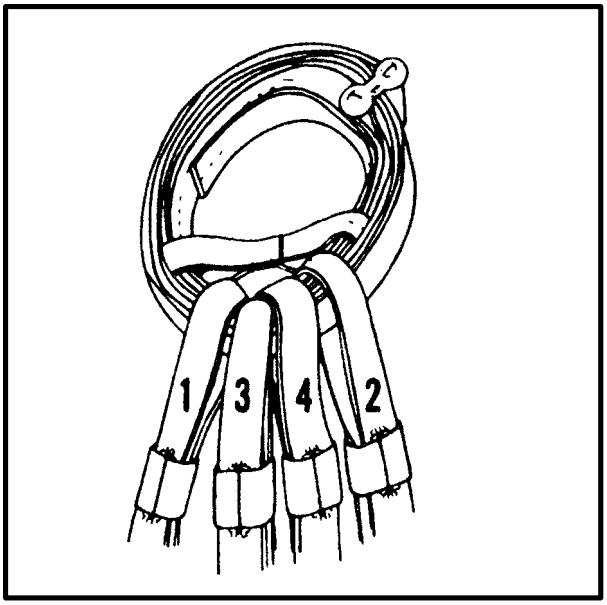


*Figure 6-25. Sling Leg Numbering Sequence for the Multileg Sling Set*

**(1) Repair.** Normal repair will consist of removal and replacement of damaged or defective components. Defective components will be removed from the sling assemblies and maintained at the unit supply until a complete unserviceable sling assembly is constructed for survey. Components salvaged from damaged multileg sling assemblies will be inspected, and if found serviceable, used to construct a serviceable sling.

**CAUTION**
**Do not attempt to repair any part of the sling, other than removal and replacement of components.**

**(2) Cleaning.** Spot clean the slings by gently brushing or rubbing the soiled area with a soft bristle brush or clean cloth dampened with dry cleaning solvent (tetrachloroethylene). Rinse the soiled area by repeating the procedure with more of the solvent and then allow the sling to air dry. Do not wring out the rinsed area. If dry cleaning solvent is not readily available, the slings may be spot cleaned with a solution of 1/2 cup of hand washing detergent dissolved in 1 gallon of warm water. Rinse the area thoroughly by repeating the procedure with fresh clean water and then let it air dry. Do not wring out the area or try to heat the slings to reduce drying time. This could damage the sling. Remove all grease, oil, rust, corrosion, or foreign matter on sling metal parts by brushing or wiping them with a cloth or fine emery cloth. File all burrs and sharp edges smooth.

**(3) Storage.** Store the sling sets in a dry area protected from direct sunlight, in a manner to prevent rust, corrosion, or contact with sharp abrasive objects and the ground.

**i. Quality Deficiency Report.** Anyone discovering a deficiency with the multileg sling set should submit SF 368 to Commander, Defense Industrial Supply Center (Code DISC-OIBE/XC), Philadelphia, PA 19111.

**NOTE: USMC should submit QDR in accordance with MCO 4855.10.**

## 6-5. 40,000-POUND CAPACITY SLING SET

The Marine Corps and Navy heavy lift sling is the 40,000-pound capacity sling set. The sling assembly consists of three major subassemblies: apex shackle, four Kevlar sling legs, and four grab links. The chain section and coupling are considered part of the sling leg subassembly. Figure 6-26 shows one sling leg for clarity.

**NOTE: Due to low stretch characteristics, do not use the 40,000-pound capacity sling set with the CH-47. However, one leg may be used as a vertical pendant when connected to a nylon sling and the load weighs less than 10,000 pounds.**

For detailed technical information on the 40,000-pound sling set, refer to USMC TM 3940-15/1, Operations and Maintenance, Sling, Multileg, Helicopter, External Lift, 40,000-pound capacity.

**a. Apex Shackle Fitting.** The 40,000-pound capacity steel apex shackle fitting holds the sling leg assemblies and attaches directly to the helicopter cargo hook (Figure 6-27). The apex fitting can be easily disassembled to allow for the removal or addition of sling legs as necessary. The spacer helps to center the apex fitting on

the cargo hook.

**b. Sling Leg Assembly.** Each 12-foot sling leg is a 1 1/8-inch diameter, 3-strand, right-regular, 3 x 37 Kevlar

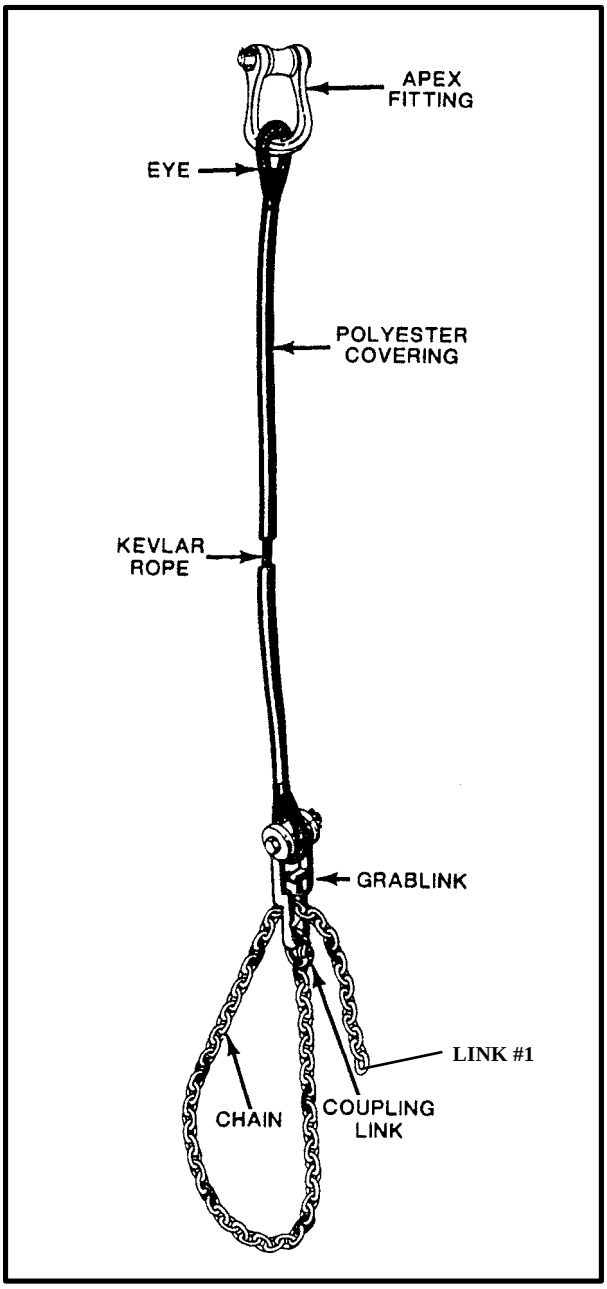


**Figure 6-26. 40,000-Pound Capacity Sling Set (One Leg)**

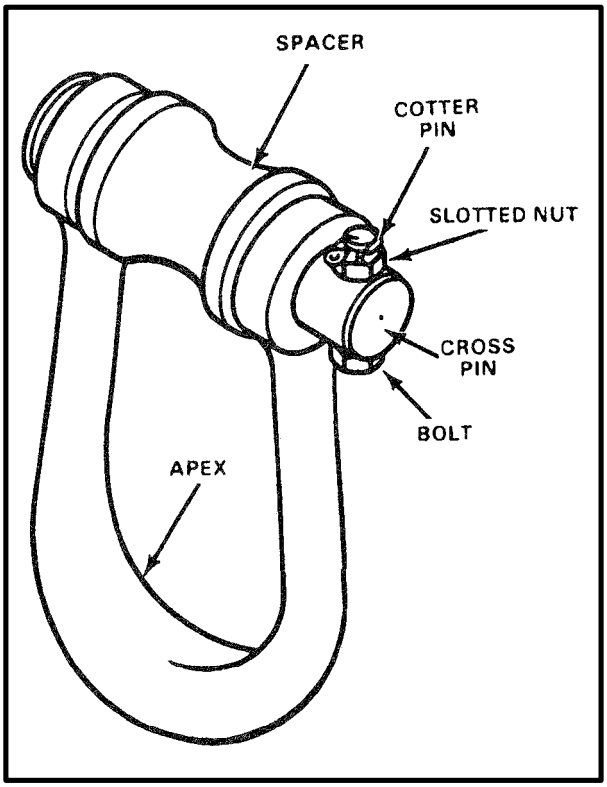


***Figure 6-27. 40,000-Pound Capacity Apex Shackle Fitting***

29 rope covered with Type 77, 9000 denier, white Dacron polyester. The entire leg assembly is protected by a blue, 1 1/2-inch diameter polyolefin heat shrink tube. The eye sock of the sling leg is reinforced by a .36 Dacron carrier braid with a blue or white adhesive application. Each leg is rated at a 10,000-pound maximum capacity. Each sling leg is marked with the manufacturer's code number, month and year of manufacture, serial number, and load capacity. If a sling leg is removed from the apex fitting, the maximum capacity of the sling set decreases 10,000 pounds for every sling leg removed. For example, a three-legged sling set can carry a maximum of 30,000 pounds. Even if more than four legs are used, the maximum capacity of the sling set is 40,000 pounds because of the apex shackle capacity.

**c. Grab Link.** Each sling leg has a grab link (Figure 6-28) connected to the lower eye of the sling leg. The grab link attaches the sling leg to the chain section and permits varying the length of the chain. The grab link is

fastened to the lower eye of the sling leg with a bolt and spacer which are held in place by a castellated nut and cotter pin. The bottom of the grab link has an eye through which a coupling link is inserted to attach the chain leg. The length of the chain is varied by passing the chain through the lifting provision, back through the center opening of the grab link, and inserting the chain link that matches the desired leg length into the slot below the keeper. The keeper is not a load bearing component, but only serves to keep the chain in the grab link under a no-load condition. The chain leg is held in position by the locking action of the chain link in the slot under the grab link keeper.

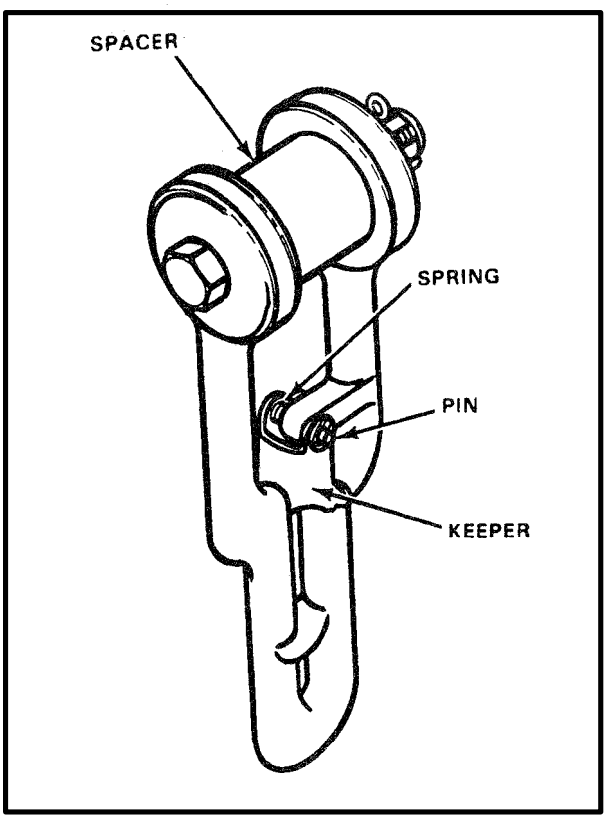


*Figure 6-28. Grab Link*

**d. Chain Assembly.** The 8-foot chain assembly has 70 links. Starting from the free end, every tenth link is painted olive drab to help in counting links. If additional lengths of chain are necessary, they can be joined to the existing chain leg using a coupling link. The chain link identified in the rigging procedures is inserted in the slot of the grab link (Figure 6-29).

**e. Life Expectancy.** Active sling assemblies (those in use) have a life expectancy of 5 years. Inactive sling

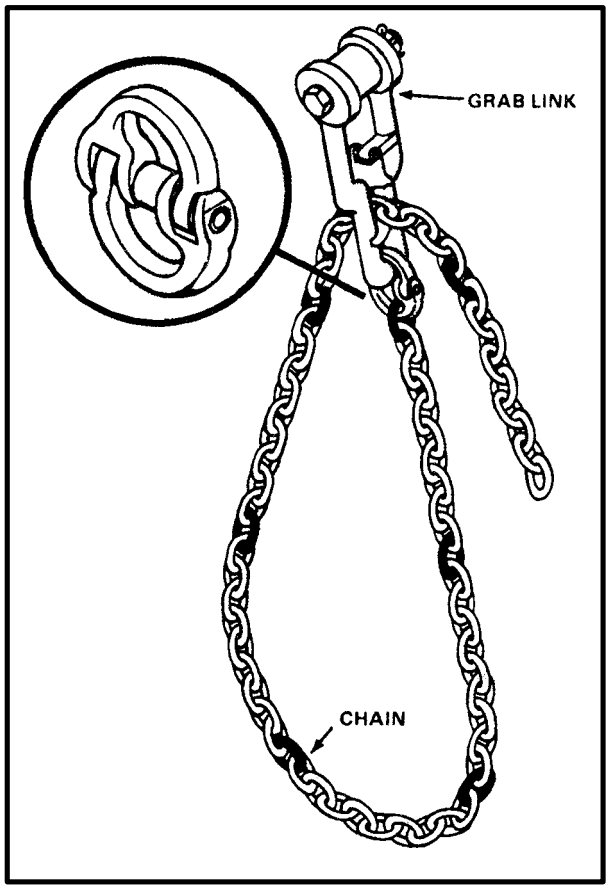


*Figure 6-29. Grab Link and Attached Chain Leg*

assembles (those maintained in storage at Marine Corps Logistics Base (MCLB)) have a life expectancy of 7 years. Sling assemblies issued to the Fleet Marine Force (FMF) from storage have a total life expectancy (storage plus active) of no more than 7 years.

**f. Serialization.** Each 40,000-pound capacity sling set is assigned a serial number by the manufacturer. The manufacturer's identification code and part number is permanently marked on metal parts (except chain links) of the sling set by etching, metal stamping, or raised characters. Metal parts include the apex shackle, shackle pin and spacer, grab link, and coupling link. The sling legs are rubber stamped or stenciled with the manufacturer's identification code, part number, serial number, and date of manufacture.

**g. Inspection.** Inspect all 40,000-pound capacity sling sets annually during their manufacture anniversary month for proper cleaning, storage, damage to components, and defects or missing components. Annual inspections and load testing will be conducted and recorded in accordance with USMC TM 3940-15/1. Requirements for annual load testing of slings will be deleted based on manufacturer's testing requirements, life expectancy for active and/or inactive sling assemblies, and because the only authorized repair is by replacement of tested components. Custodial commands have the option to randomly load test sling assemblies in accordance with MIL-S-29398 (USMC) and extend the life expectancy beyond the 5 to 7 year time period, if deemed appropriate as a result of inspections.

**h. Maintenance.** If these sling assemblies are inspected and maintained according to the requirements of the damage and corrective action criteria listed in Table 6-3, there should be no fear of dropping a sling load through failure of the slings or components. Third echelon level of repairs are authorized in the field at the General Support Maintenance Company (GSM Co), Force Service Support Group (FSSG) by replacement of components or entire assembly (Appendix B) obtainable through the Marine Corps Logistics Base (Code 838-2), Albany, GA 31704.

**i. Preventive Maintenance Checks.** Before and after using the sling set, check metal parts for rust, corrosion, cracks, bends, distortions, burrs, sharp edges, and signs of wear and tear. Look for dirt, grease, oil, and any other foreign matter on the components. Clean, protect, and properly store the sling set when it is not in use. See USMC TM 3940-15/1 for detailed information on preventive maintenance checks and services, storage, and surveying procedures.

**j. Maintenance Materials and Procedures.** Procedures and materials used for field maintenance of the sling set are as follows:

**(1)** Use a brass-bristle wire brush to clean apex shackle and grab link.

**(2)** Use mild detergent to clean sling assembly.

**(3)** Rinse thoroughly and air dry to protect metal parts.

**(4)** Use lubricating oil to protect metal parts.

**(5)** Use polyolefin preservative to protect sling legs.

**k. Storage.** After performing preventive maintenance checks and necessary cleaning, place the sling assembly in a sturdy container and store in a dry area away from direct sunlight.

**CAUTION**

**Keep the sling set away from direct sunlight during storage. The polyolefin sling leg cover protects the sling leg from ultraviolet light. Ultraviolet light will weaken the Kevlar fibers. Always ensure that the polyolefin sling leg cover is complete and damage free.**

**l. Quality Deficiency Report.** Anyone finding a deficiency in the 40,000-pound sling set should submit an SF 368 to CG, Marine Corps Logistics Base (Code 838-2), Albany, GA 31704.

**NOTE: USMC should submit QDR in accordance with MCO 4855.10.**

## 6-6. NYLON FLAT-WEB SLINGS

**NOTE: The Type X family of aerial delivery slings are being phased out of sling load use. Effective 1 January 1998 Type X nylon slings will not be authorized for use on sling loads. The Multi-loop Line, Type XXVI aerial delivery sling is the authorized replacement.**

Currently, two types of nylon flat-web slings used to rig loads for airdrop may also be used to rig loads for sling load. They are the Type X nylon aerial delivery slings and their replacement, the Type XXVI nylon multiloop lines. Appendix H is a listing of flat-web slings used to aerial deliver Tactical Air Command shelter systems.

**NOTE: Army units are encouraged not to rig sling loads using flat-web slings but rather use the 10,000- or 25,000-pound capacity sling sets due to greater reliability and ease in rigging.**

**Table 6-3. Damage Criteria Chart**

| DAMAGE CRITERIA (40,000-pound sling set) | | | |
|---|---|---|---|
| **COMPONENT** | **TYPE OF DAMAGE** | **EXTENT OF DAMAGE** | **CORRECTIVE ACTION** |
| **SLING LEG EYE** | Abrasion of the eye. | Abrasion through eye sock and into polyolefin heat shrink tubing jacket. | Replace sling legs (4). |
| | Severe deformation. | Deformation/creasing to the extent that the eye is visibly and physically weakened, and is no longer stiff. | Replace sling legs (4). |
| | Cut of the eye sock. | Yellow Kevlar fibers showing. | Replace sling legs. (4) |
| | Discoloration/dirty/ soiled. | White or blue color is still discernible. | Clean with warm soapy water and/or dry cleaning solvent. (Tetrachloroethylene). |
| | | White color eye tacky or sticky. | Clean with warm soapy water and/or dry cleaning solvent and powder with talc. |
| | | No white or blue color discernible. | Clean with warm soapy water and/or dry cleaning solvent to determine if abrasion through eye sock exists. If abrasion exists through eye sock, replace sling legs (4). |
| **SLING LEG BODY** | Cuts on or abrasion of the sling leg. | No set amount; cut or abrasion is through polyolefin heat shrink tubing, but does not cut the yellow Kevlar fibers/cords. | Tape the cut or abrasion with rubber electrical tape after thorough cleaning with warm soapy water or dry cleanig solvent. |
| | | Cut or abrasion has loosened or broken three or more yellow Kevlar fibers/cords. | Replace sling legs (4). |
| 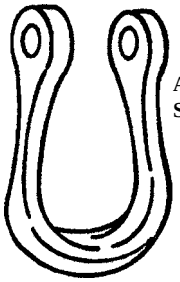 **APEX SHACKLE** | Burred, bent, or cracked. | No damage to pin, spacer, pin bolt, nut, and cotter pin. | File burrs or replace apex shackle. |
| | | Damage affects only some of the other components of the apex shackle assembly. | Replace affected components as required. |
| | | Damage to shackle affects all other components. | Replace apex shackle subassembly. |

**Table 6-3. Damage Criteria Chart (Continued)**

| DAMAGE CRITERIA (40,000-pound sling set) | | | |
|---|---|---|---|
| **COMPONENT** | **TYPE OF DAMAGE** | **EXTENT OF DAMAGE** | **CORRECTIVE ACTION** |
| 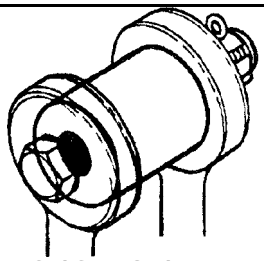 **SPACER, GRAB LINK** | Burred, bent, or cracked. | No damage to grab link body, bolt, nut, cotter pin, and keeper assembly.<br><br>Damage affects only some of the other components of the grab link subassembly.<br><br>Damage affects all other components. | File burrs or replace spacer.<br><br>Replace affected components as required.<br><br>Replace grab link assembly. |
| 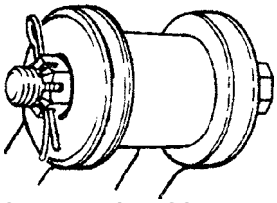 **BOLT, NUT, AND COTTER PIN OR GRAB LINK** | Burred, bent, cracked, or missing. | No damage to grab link body, spacer, and keeper assembly.<br><br>Damage affects only some of the other components of the grab link subassembly.<br><br>Damage affects all other components | File burrs or replace bolt, nut, cotter pin, or all three items as required.<br><br>Replace affected components as required.<br><br>Replace grab link subassembly. |
| 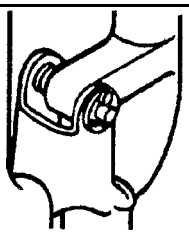 **KEEPER ASSEMBLY, GRAB LINK** | Loose, bent, cracked, broken, or missing. | No damage to grab link body, spacer, bolt, nut, or cotter pin.<br><br>Damage affects only some of the other components of the grab link subassembly.<br><br>Damage affects all other components. | Replace entire damaged keeper assembly, or individual components as required.<br><br>Replace affected components as required.<br><br>Replace grab link subassembly. |
| **COUPLING LINK** | Pin loose; body burred, bent, cracked, or broken. | All | File burrs or replace coupling link. |
| **CHAIN 70-LINK SLING LEG** 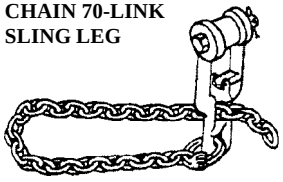 | Burred, cracked, broken, or distorted links. | All | File burrs or replace all four (4) chain legs. |

**Table 6-3. Damage Criteria Chart (Continued)**

| DAMAGE CRITERIA (40,000-pound sling set) | | | |
|---|---|---|---|
| **COMPONENT** | **TYPE OF DAMAGE** | **EXTENT OF DAMAGE** | **CORRECTIVE ACTION** |
| 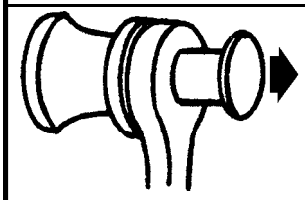 **PIN, APEX SHACKLE** | Burred, bent, or cracked. | No damage to shackle, spacer, pin bolt, nut, and cotter pin.<br><br>Damage affects only some of the other components of the apex shackle subassembly.<br><br>Damage to pin affects all other components. | File burrs or replace pin.<br><br>Replace affected components as required.<br><br>Replace shackle subassembly. |
| 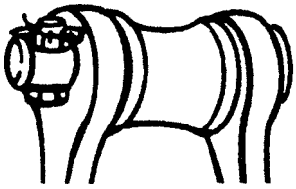 **SPACER, APEX SHACKLE** | Burred, bent, or cracked. | No damage to shackle, pin, pin bolt, nut, and cotter pin.<br><br>Damage affects only some of the other components of the apex shackle subassembly.<br><br>Damage to spacer affects all other components. | File burrs or replace spacer.<br><br>Replace affected components.<br><br>Replace apex shackle subassembly. |
| 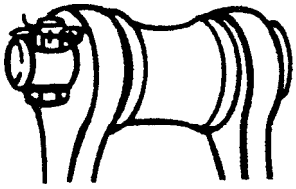 **BOLT, NUT, AND COTTER PIN FOR PIN, APEX SHACKLE** | Burred, bent, cracked, or missing. | No damage to shackle, pin, and spacer.<br><br>Damage affects only some of the other components of the apex shackle assembly.<br><br>Damage affects all other components. | File burrs or replace bolt, nut, cotter pin, or all three items as required.<br><br>Replace affected components as required.<br><br>Replace apex shackle subassembly. |
| 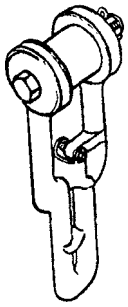 **GRAB LINK BODY** | Burred, bent, or cracked. | No damage to bolt, spacer, nut, cotter pin, and keeper assembly.<br><br>Damage affects only some of the other components of the grab link subassembly.<br><br>Damage affects all other components. | File burrs or replace grab link body.<br><br>Replace affected components as required.<br><br>Replace grab link subassembly. |

**a. Type X Nylon Aerial Delivery Slings.** The 1 3/4-inch Type X aerial delivery slings are manufactured in 3-, 8-, 9- 11-, 12-, 16-, and 20-foot lengths. Each aerial delivery sling is constructed with two, three, or four concentric loops. Due to revised safety factors, when using the aerial delivery slings for rigging a sling load, the maximum rated capacity for two-, three-, and four-loop slings is 3,500, 5,250, and 7,000 pounds, respectively.

**WARNING**

**USING TYPE X AERIAL DELIVERY FLAT-WEB SLINGS AS PENDANTS IS PROHIBITED. REFER TO CHAPTER 8 FOR APPROVED VERTICAL PENDANTS.**

**b. Type XXVI Nylon Multi-loop Lines.** The Type XXVI nylon multi-loop lines are available in 3-, 9-, 11, 12-, 16-, and 20-foot lengths (Figure 6-30). Each multi-loop line is constructed of two or four concentric loops. Three- or six-loop 60-foot and two- or six-loop 120-foot Type XXVI nylon multi-loop lines are also available. See Appendix B for NSN information.

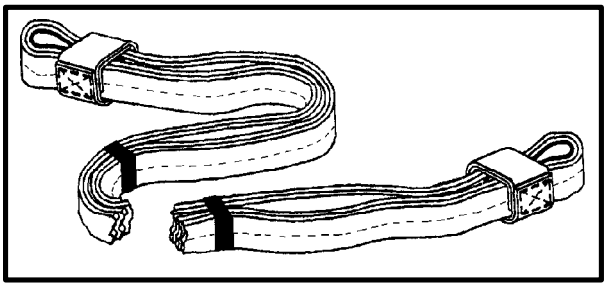

*Figure 6-30. Two-Loop, Type XXVI Multi-loop Line*

The two-loop Type XXVI nylon multi-loop line's maximum rated capacity is 5,600 pounds when rigging a sling load. The maximum capacities for three-, four-, and six-loop multi-loop lines are 8,500, 11,200, and 17,000 pounds respectively. A colored thread stitched lengthwise along the middle of the strap identifies the sling as a Type XXVI nylon multi-loop line. Type X nylon aerial delivery slings do not use a colored thread.

**NOTE: Throughout the remainder of this chapter, the generic term "slings" will refer to both Type X nylon aerial delivery sling and Type XXVI nylon multi-loop line unless specific reference is made to a particular sling.**

**c. Attachments and Hitches.** Slings are attached to the loads using one of the following methods:

**(1)** The most common form of load attachment is the sling-to-clevis (vertical hitch) attachment shown in Figure 6-31. This method is preferred because it is the quickest and easiest to remove.

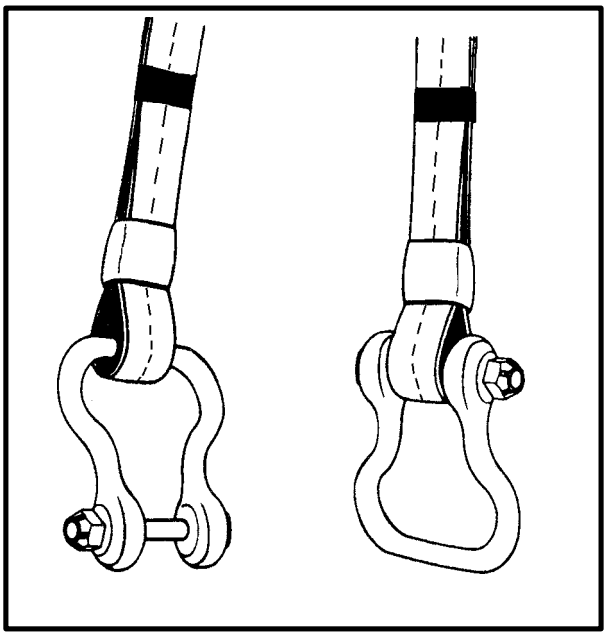

*Figure 6-31. Sling-to-Clevis Attachment (Vertical Hitch)*

**(2)** The basket hitch (Figure 6-32) attaches sling legs to the load or to the ring. It is easy to remove this hitch

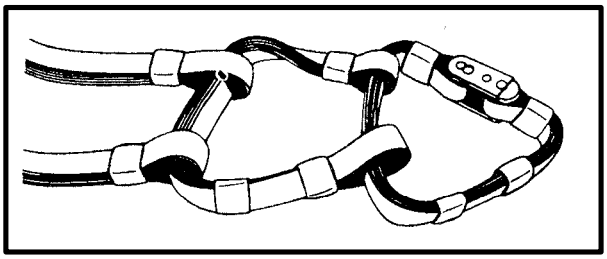

*Figure 6-32. Basket Hitch*

from the load after a lift and to separate the sling legs.

**(3)** A choker hitch (Figure 6-33) connects one end of the sling to a frame member or similar structure on a

load. Do not use a choker hitch around an item with a circumference of less than 8 inches or a diameter smaller than 2 1/2 inches. The uneven tension placed on the sling when a choker hitch is used around smaller diameter items, such as a lifting ring, may cause sling failure. The disadvantage of this hitch is that it draws up tightly and is difficult to remove.

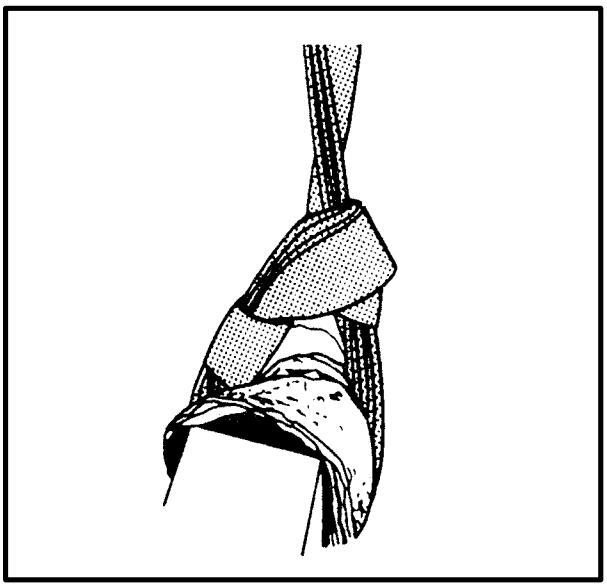

*Figure 6-33. Choker Hitch*

**d. Rigging a Load.** The type and quantity of slings used to rig loads vary with the weight and configuration of the load to be lifted. Figure 6-34 shows a four-legged nylon sling.

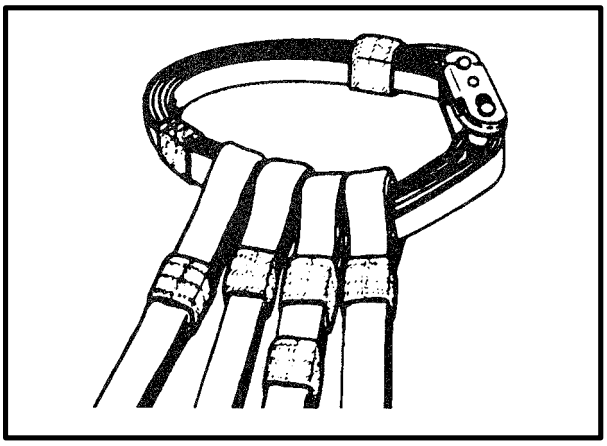

*Figure 6-34. Four-Legged Nylon Sling*

The completed sling set is made up of sling legs and a 3-foot sling (ring) (Figure 6-35). The sling legs reach from the lifting points on the load to the apex ring. Each sling leg may be one or more sling leg segments.

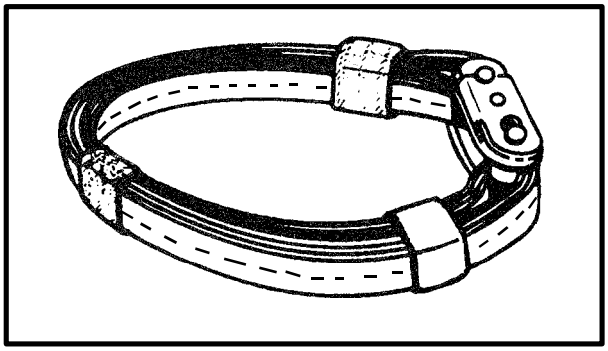

*Figure 6-35. Three-Foot Apex Ring*

**(1)** The apex ring joins the slings to form the sling apex and attaches the slings to the helicopter cargo hook. The apex ring is made by joining the two ends of a 3-foot sling with either a Type IV connector link (Figure 6-36) or a two-point link assembly (Figure 6-37). An apex ring made from a three-loop Type X nylon or two-loop Type XXVI nylon sling has a maximum capacity of 10,000 pounds. When two apex rings are used together, the two apex rings have a combined maximum capacity of 17,500 pounds. Use the 10,000-pound capacity sling set apex fitting with the aluminum spacer to attach the apex ring to the UH-60 cargo hook.

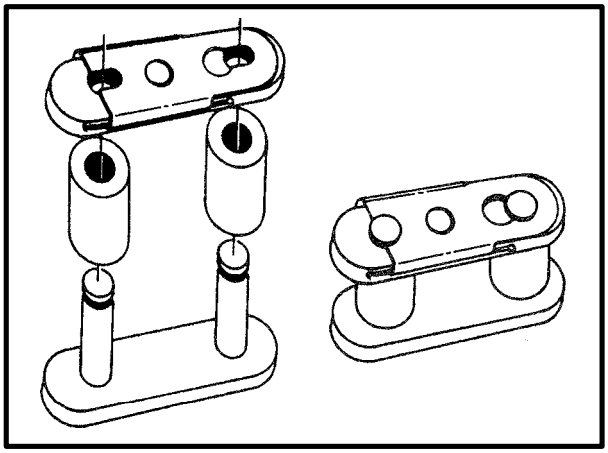

*Figure 6-36. Type IV Connector Link*

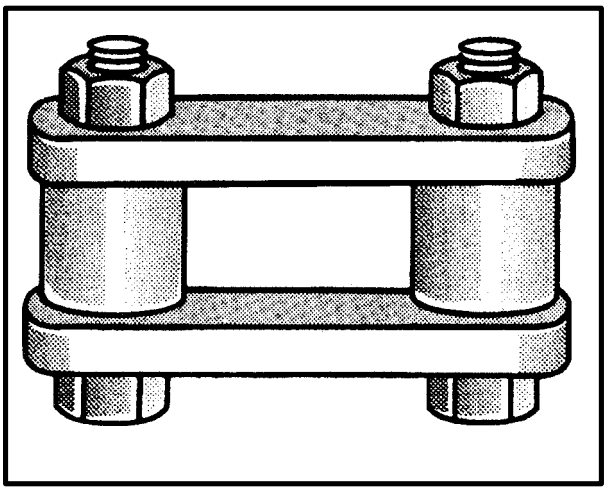

*Figure 6-37. Two-Point Link Assembly*

**(2)** The four-loop Type XXVI nylon multi-loop line is too large for the Type IV connector link. Use a two-point link assembly to join the two ends of a four-loop Type XXVI nylon multi-loop line together. An apex ring made from a four-loop Type XXVI nylon sling and two-point link has a maximum capacity of 25,000-pounds. A 25,000-pound capacity web ring, similar to the web ring on the 15,000-pound capacity multileg sling set, can also be used as the apex fitting. Use caution when rigging a load with nylon flat-web slings because few standardized procedures are available. Generally, the nearer a load's sling leg arrangement approaches an equilateral triangle, the better the load suspension. The sling legs should be of the shortest feasible length because:

**(a)** The flight characteristics of a helicopter with a particular load can be improved by having the load suspended closer to the underside of the helicopter.

**(b)** Supply economy of slings may be an operational factor.

**(3)** Generally, the length of each sling leg is adjusted as necessary to assure that the load maintains an acceptable attitude when lifted. Since the center of balance of a load suspended from a single point will always fall directly below the suspension point, the initial rigging of a particular load might result in the load's tilting to an unacceptable degree at lift-off. It may be necessary, therefore, to test the attitude of load suspension by lifting the rigged load with a hoisting device (for example, a wrecker truck or a truck-mounted crane). This test would have the same effect, except for drag, as that of having the load lifted by a helicopter. Unless standardized rigging procedures are available to the rigging personnel (such as those in FM 55-450-4/FMFRP 5-31, VOL II/NWP 42-1, VOL I/AFR 50-16, VOL I/COMDTINST M13482.3 and FM 55-450-5/FMFRP 5-31, VOL III/NWP 42-1, VOL III/AFR 50-16, VOL III/COMDTINST M13482.4), it is advisable that the suspension-attitude test be run on all sling loads that could possibly create an undesirable suspension attitude.

**(4)** When rigging vehicles, the desired attitude of load suspension is normally "nose low" for prime movers, towed loads, and coupled vehicles (prime mover with trailer).

**(5)** When rigging the load, make one complete twist of the sling for each 3 feet of sling length. The twists tend to hold the sling loops together better, which keeps the slings from flapping in the wind and setting up a vibration that could cause damage. Hitches should be made as small and neat as possible.

**(6)** To prevent damage to slings during helicopter sling load operations, any sling connected next to or resting against an abrasive surface should be wrapped with padding or cushioning material (such as felt sheets or cellulose padding). Secure the padding to the sling with tape or nylon cord (Figure 6-38).

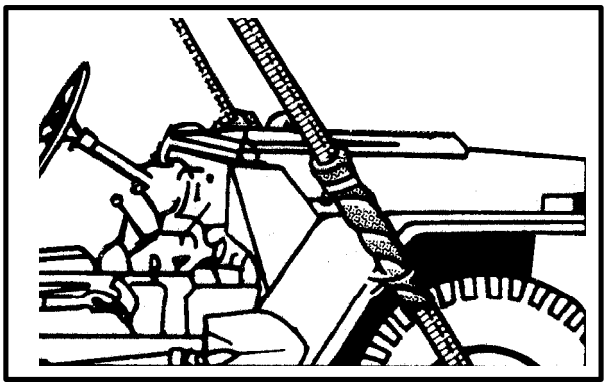

*Figure 6-38. Padding the Sling Leg*

**(7)** Sling legs should be taped or tied together (breakaway technique) to prevent fouling or entanglement of the slings during hookup. Pressure-sensitive tape or

1/4-inch cotton webbing, 80-pound breaking strength, is used to temporarily hold the slings in place until the helicopter puts tension on the slings as it begins to lift the load. The tape or webbing then breaks, preventing the slings from becoming entangled with the load.

**e. Inspection, Maintenance, and Storage.** The two ends of each loop of nylon flat-web slings are sewn together. Figure 6-39 illustrates the sewn splice and how to inspect for broken or loose stitches. Use the requirements and criterion of the 15,000-pound multileg sling set when marking, inspecting, cleaning, and storing the aerial delivery slings and multiloop lines.

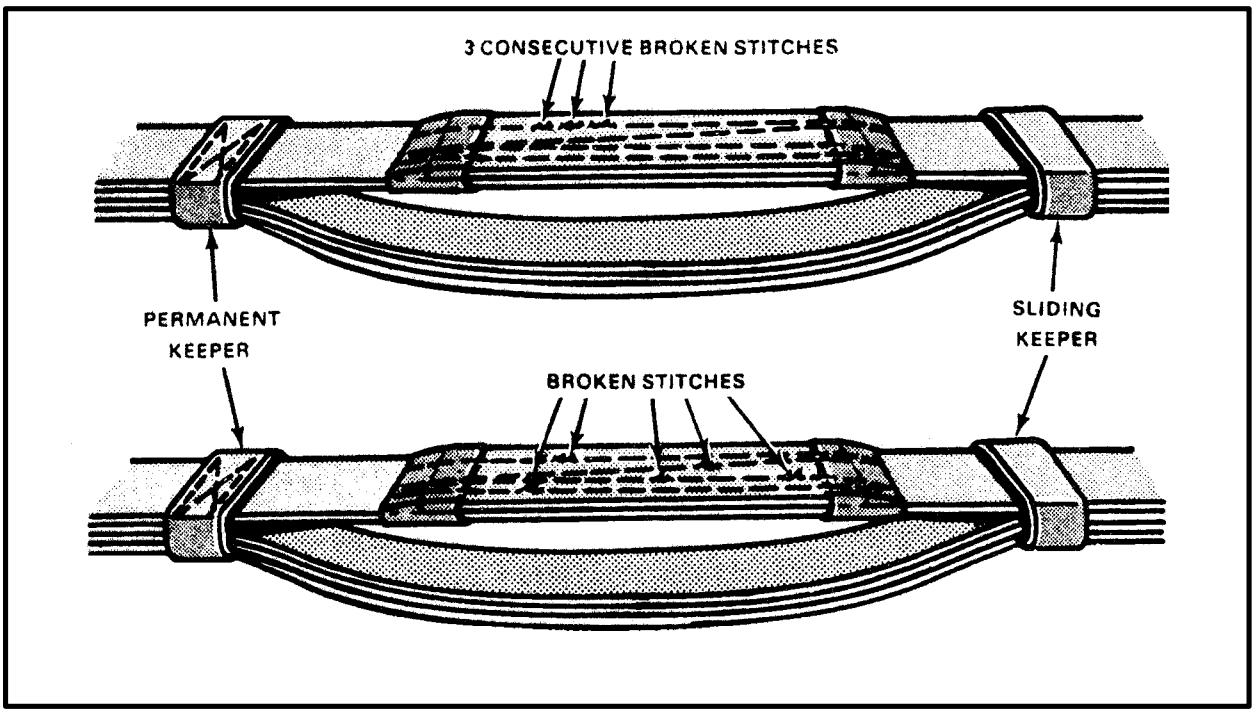


*Figure 6-39. Sling with Broken or Loose Stitches*

# CHAPTER 7

# CARGO NETS

**THIS CHAPTER IMPLEMENTS STANAG 2950**

## 7-1. INTRODUCTION

This chapter covers the flat-web nylon cargo net, along with the 5,000- and 10,000-pound capacity knotless nylon cord cargo nets. These nets are used to carry supplies, equipment, and loose cargo. The characteristics of each net are discussed in detail.

## 7-2. FLAT-WEB NYLON CARGO NET

The flat-web nylon cargo net was designed to carry loose cargo when loading or offloading ships. It was not designed nor tested for helicopter sling loading, although it is commonly used during sling load operations. The net weighs 50 pounds and has a flat surface area measuring 14 feet x 14 feet. The mesh size is 8 inches square. A 10 foot x 10 foot and 12 foot x 12 foot net are also available. The rated capacity of the net is 2,500 pounds (Figure 7-1), downgraded from 4,500 pounds due to an increased safety margin. The net has four steel hoist links with one link attached to each corner of the net. A 7-foot loop of nylon rope may be attached to each link to help the riggers spread out the net. Refer to Chapter 9 when using the net during vertical replenishment operations. It is important to position the load diagonally at a 45 degree angle to the sides of the net. Refer to Figure 7-2 for the proper position of the load.

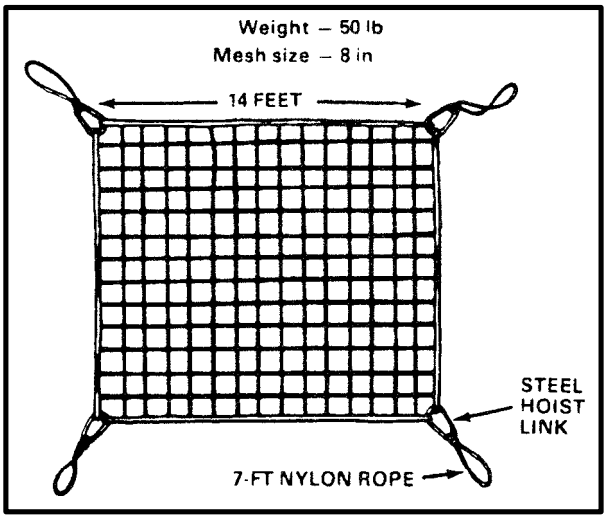


*Figure 7-1. Flat-Web Nylon Cargo Net*

- Spread the net evenly on the ground or other flat surface. If the load has sharp edges that could damage the net, place a piece of canvas on the net so the load cannot shift and tear the net.

- Place the heavier items of cargo in the center of the net so that the net will ride evenly.

- Arrange the cargo so the net covers at least three-fourths of the height on all sides of a single item or the entire height of a mixed load.

- Tie the net around the top of the cargo with nylon cord (Figure 7-2) or other material by routing the cord through the net mesh. Tighten and secure the cord to prevent the net from hanging loose and cargo falling out.

- Use one, two, or four sling legs to suspend the loaded net below the helicopter. Loop the chain end of the sling leg through one or more steel hoist links and insert link 3 into the grabhook/grab link.

- If one sling leg is used, loop the chain end through all four hoist links. If two sling legs are used, loop each chain through two steel hoist links. If four sling legs are used, loop one chain through each steel hoist link. Remember, do not exceed the rated capacity of the sling leg.

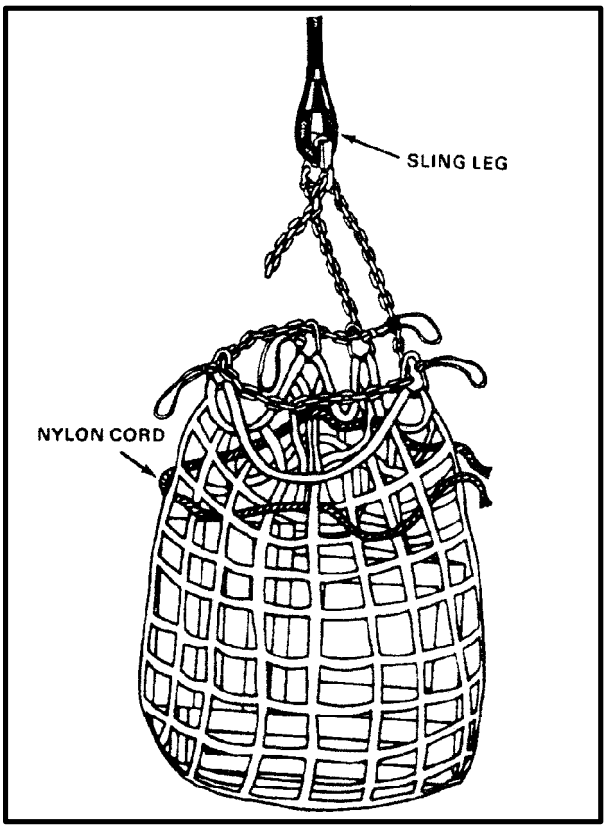


*Figure 7-2. Rigging A Loaded Net*

• An alternate method is to place a medium clevis or apex fitting through each steel hoist link and attach the desired cargo sling to the clevis or apex fitting.

**NOTE: Never use the nylon rope attached to hoist link as part of the sling attachment system. The rope is only used to handle and spread the net.**

• When sling loading several nets together, try to adjust the chain end of the sling leg so that the nets are picked up and set down at about the same time.

## 7-3. 5,000- AND 10,000-POUND CAPACITY KNOTLESS NYLON CORD CARGO NETS

The 5,000- and 10,000-pound capacity octagon-shaped cargo nets are constructed from interwoven nylon cord. Each set of four lifting legs has a hook that attaches to the apex fitting that is connected directly to the aircraft cargo hook. The apex fitting is attached by a tether cord to the set of lifting legs with the net identification tag. The other ends of the lifting legs are attached to the net's outer border cord. A square-shaped load zone area is marked by a yellow cord interlaced with the net mesh. This zone marks the center of the net and is used as a guide to place the load. When positioning the load, the sides of the load can extend beyond the load zone, but the overhang should be the same on each side. The olive drab body of the 5,000-pound capacity cargo net is 15 feet wide (Figure 7-3). Mesh size is 6 inches and the net weighs 58 pounds. Volume capacity is 125 cubic feet. The 10,000-pound capacity cargo net is black and the body is 18 feet wide (Figure 7-4). It is constructed from a heavy weave nylon braid cord with 7 1/2 inches between mesh. The net weighs 96 pounds and has a volume capacity of 380 cubic feet.

**a. Inspecting the Nets.** The cargo net components are inspected as follows:

**(1)** Inspect each hook for burrs, cracks, and distortions. Smooth out any burrs with a file. The net must be replaced if the hook is missing or badly damaged.

**(2)** The same apex fitting is used with both cargo nets and forms the link between the helicopter cargo hook and the four sets of lifting legs. Inspect the apex fitting for burrs, distortion, or cracks. File any burrs and replace the apex fitting if it is bent or cracked.

**(3)** Inspecting the lifting legs is important and should be done before each operation. You, the user, are responsible for the net's condition, as well as the cargo traveling inside the net. Inspect the outside lifting strap and then the inside strap where they are looped and sewn to the border cord. Check the stitching for damage or unraveling which can be caused by abrasion. Inspect the lifting leg by running your hand along the length of the webbing (thumb on one side, index and the middle fingers on the other side). The lifting leg or strap must be replaced if any cut is 1/2-inch or more in length in any direction.

**(4)** The outer border cord is located around the outside of the net. It gives the net its octagonal shape and is designed to provide an even distribution of weight when the net is under the stress of a load. Inspect the entire border cord for cuts or severely abraded areas. The stress points may be slightly out of shape but that will not af-

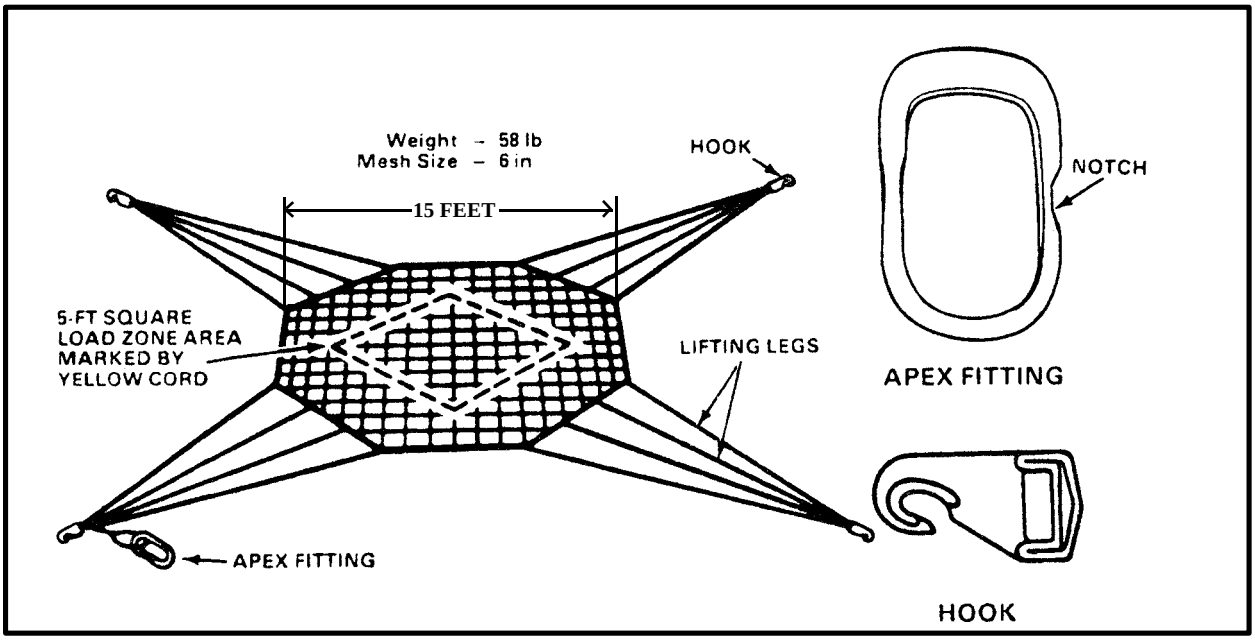


*Figure 7-3. 5,000-pound Capacity Cargo Net*

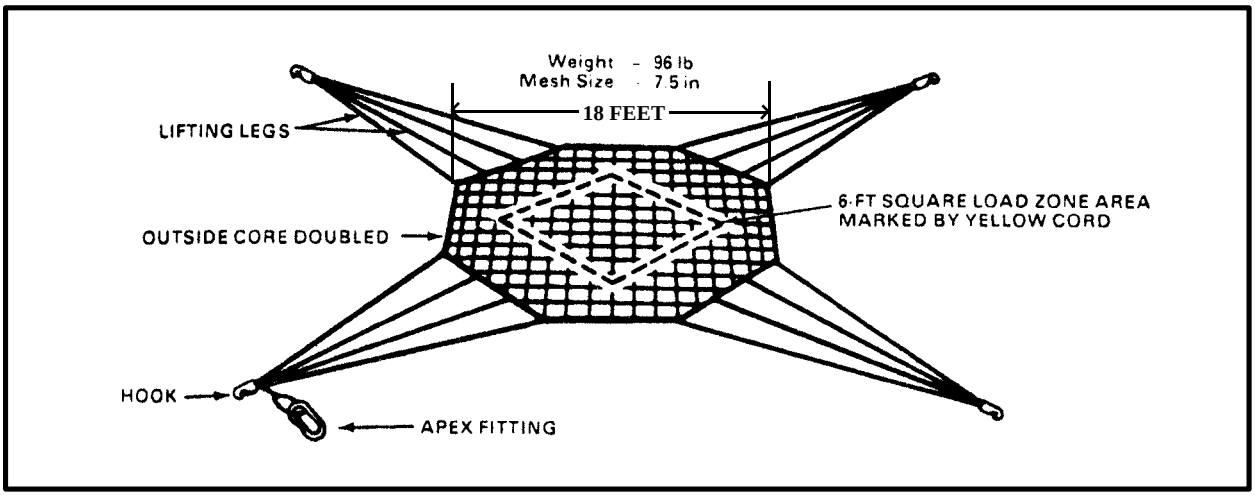


*Figure 7-4. 10,000-Pound Capacity Cargo Net*

fect the strength of the net. If the outer cord is cut or abraded 1/2 inch or more in any direction, it must be repaired before the net can be used. Your direct support unit (Airdrop Equipment Repair and Supply Company) can repair the cargo net. (USA)

**b. Rigging the Cargo Net.** When preparing to rig a net, remember the following rules:

•Never exceed the weight limits of the net.

•Do not sling load cargo having sharp edges or protrusions without first protecting the edges so they will not damage the net.

•Do not carry small items that could slip through the mesh. Place small objects in a canvas liner.

**NOTE: When carrying loads that are not palletized, it is suggested that you weave the top portion of the border cord with 550-pound nylon cord to prevent items from failing out of the net (weave and tie).**

Follow these instructions when rigging the net:

**(1)** Spread the net out on the ground. Have four persons pull evenly on each of the four lifting legs to open the net to its fullest extension over the spot where the net is to be loaded (Figure 7-5). This will prevent the net from shifting under the pallets or load when the helicopter lifts the net.

**(2)** Inspect the net. Repair as necessary. Inspect the pallet or load and make sure that the banding material and pallet frame will not puncture, cut, or tear the net. Tape over sharp edges with pressure-sensitive tape.

**NOTE: When forklifts are used to move pallets onto the nets, move the lifting legs to one side so that they will not be damaged by the tires. Do not allow the pallet or the undercarriage of the forklift forks to drag on the net surface. The forklift forks could tear the net and pull it out from under the load. If the net is pulled out, the load may not be centered or could be unstable in flight.**

**(3)** Align the load on the net so that the sides of the load are parallel with the yellow cord (Figure 7-6). The load may overlap the yellow cord if the load is bigger than the yellow cord marked area. If the load is placed correctly, the load's center of gravity will be near the center of the net. The lifting legs will be on the side of the load, not on the corners. If the load is loose cargo, place the cargo on the net with the heaviest items in the center and the lighter items toward the sides or on top of heavier items.

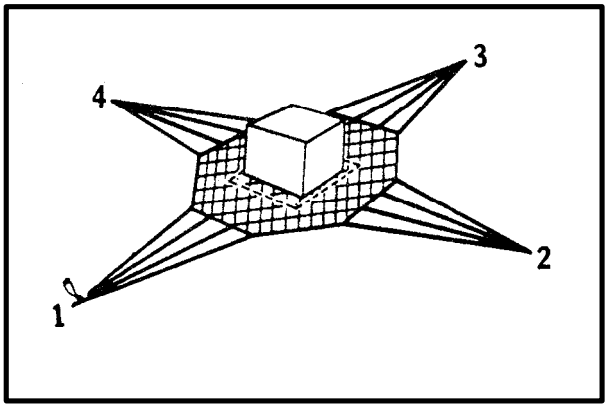


*Figure 7-6. Aligned Load*

**NOTE: If two or more pallets will be carried in one net, place the pallets side by side so that the final load is more square in shape than if they were placed end to end. If pallets are placed on top of each other, make sure the pallets are stable so the hookup team has a safe platform to stand on.**

**(4)** Position one person on top of the load. Connect the legs to the apex fitting in the following sequence: 1, 3, 2, and 4, to provide equal lift on all legs (Figure 7-7). Hooks should be alternated on the apex fitting.

**(5)** After connecting all four hooks to the apex fitting, tape or tie the four hooks together to prevent them from coming unhooked when the apex is laid down (Figure 7-8).

**(6)** All four sides of the net are now ready to be pulled up around the load. Begin by having the person

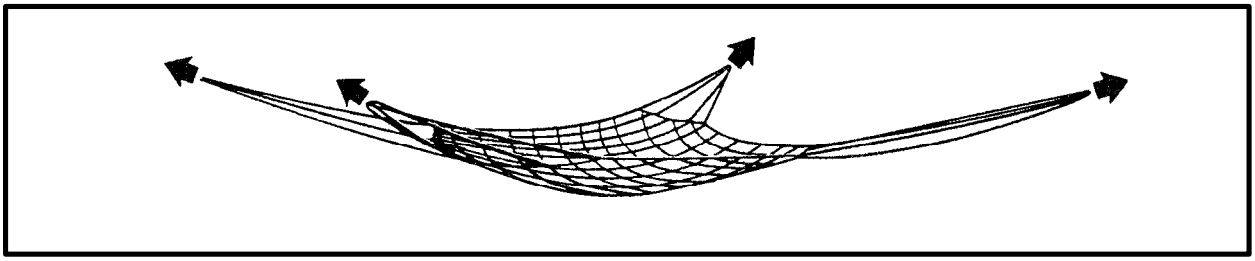

*Figure 7-5. Fully Extended Net*

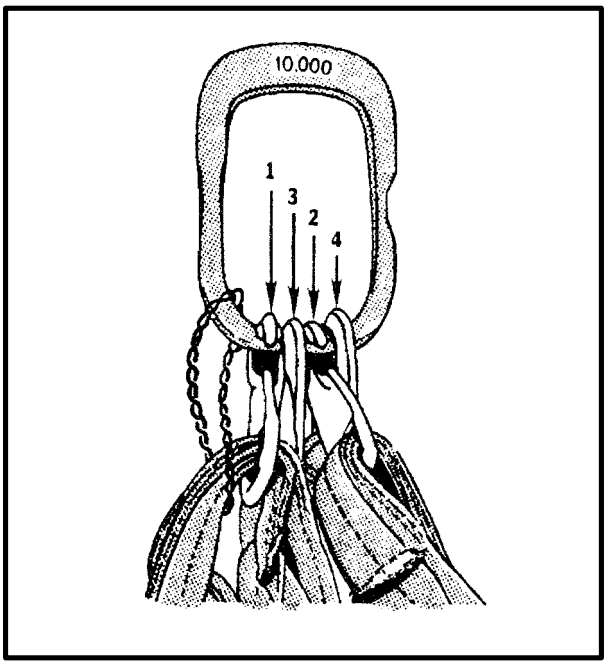


*Figure 7-7. Legs Hooked in Sequence*

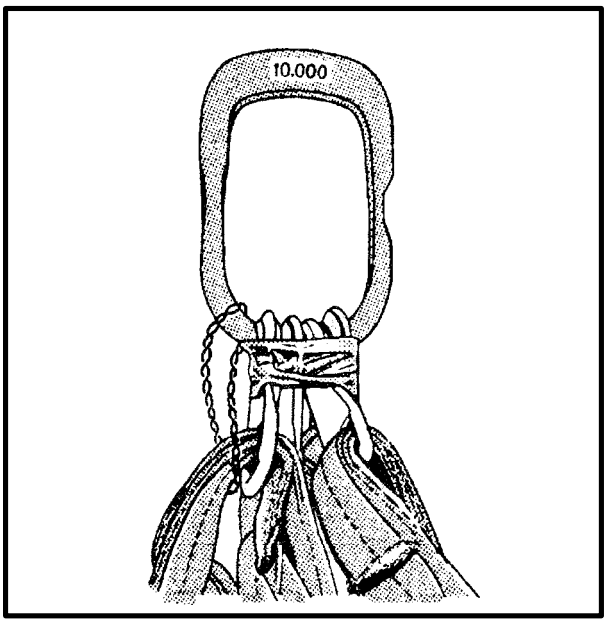


*Figure 7-8. Taped Hooks*

on top of the load hold the apex up and another person tape or tie all 16 lifting legs together at 3- to 4-foot intervals until no more slack can be pulled up on the legs. If the load is small, you may have to tape or tie the net together above the load. The tighter the net is around the load, the less possibility there is of damage to the net. Tape or tie the legs and net so that the net does not snag on the load as the helicopter lifts the net (Figure 7-9). Use breakaway technique so that the tape or tie can break after the slack is removed from the legs and net.

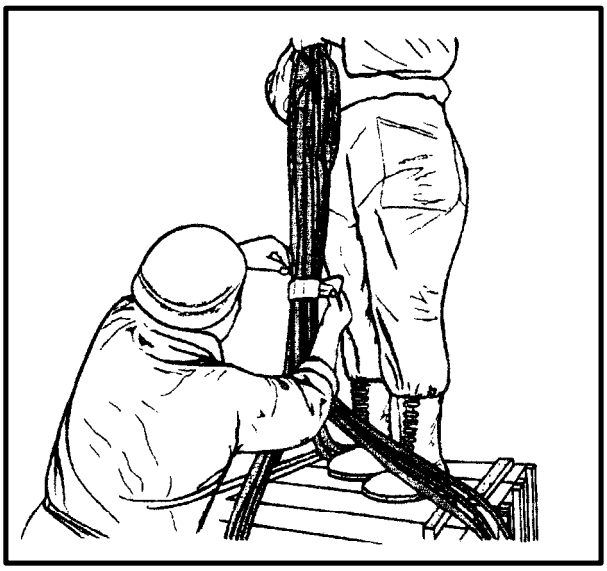

*Figure 7-9. Taping Lifting Legs*

**(7)** Lift the sides of the net up while taping the legs so that the net does not get caught on the pallet or load protrusions (Figure 7-10).

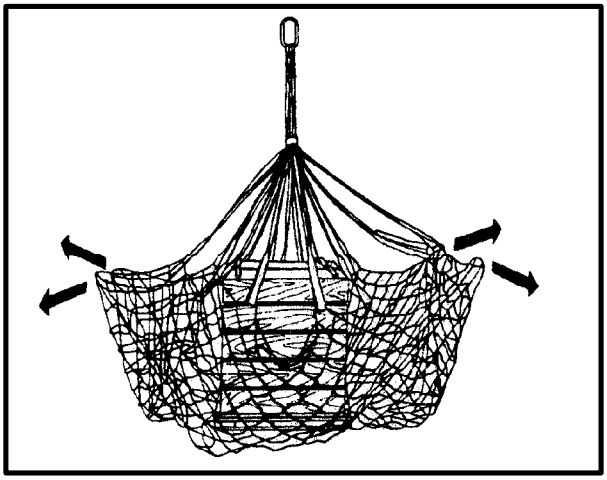

*Figure 7-10. Net Pulled Outward from the Load*

**(8)** After you finish taping the legs and net on top of the load, pull the net outward at each corner, grasp the border cord from each side near the corner of the load, and tape them together to tighten the sides of the net. Take the excess netting at the corner and tape to the adjoining side. At each side, pull the net up as high as possible and tape it to itself to prevent it from snagging on the load and tearing the net (Figure 7-11). Use only enough tape to hold the net in place on the load. **DO NOT** tape the net to the load.

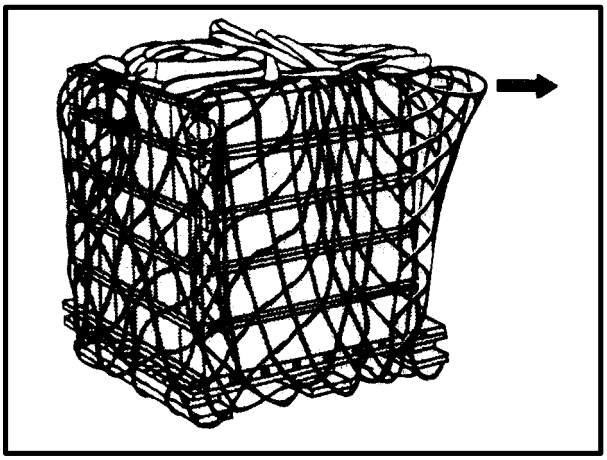

*Figure 7-11. Excess Net Taped to Itself*

**(9)** Coil the lifting legs on top of the load. The net is now ready for hookup to the helicopter (Figure 7-12). If the load must be moved after it is rigged, carefully guide the forklift forks through the net and into the pallet slots. Pallets can be stored temporarily with nets rigged around them. However, they should not be stored on concrete. Placing an empty pallet on the concrete surface and setting the rigged net on top of the empty pallet helps to reduce the possibility of damage from the net sliding on the concrete when the helicopter lifts the load.

**(10)** Normally the net apex fitting is directly attached to the cargo hook. If the load is a large one, the lifting legs may not be long enough to allow the hookup man to perform a safe hookup to the aircraft. If you cannot lift the apex fitting at least 6 feet above the top of the load, add a reach or vertical pendant (Figure 7-13). Remember, the capacity of the vertical pendant must be greater than the weight of the load.

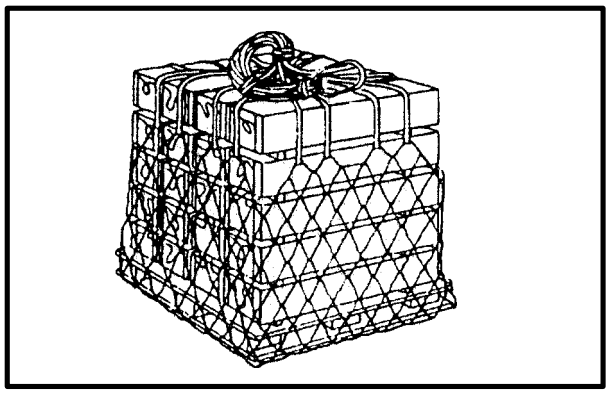

*Figure 7-12. Lifting Legs Coiled on Top of Load*

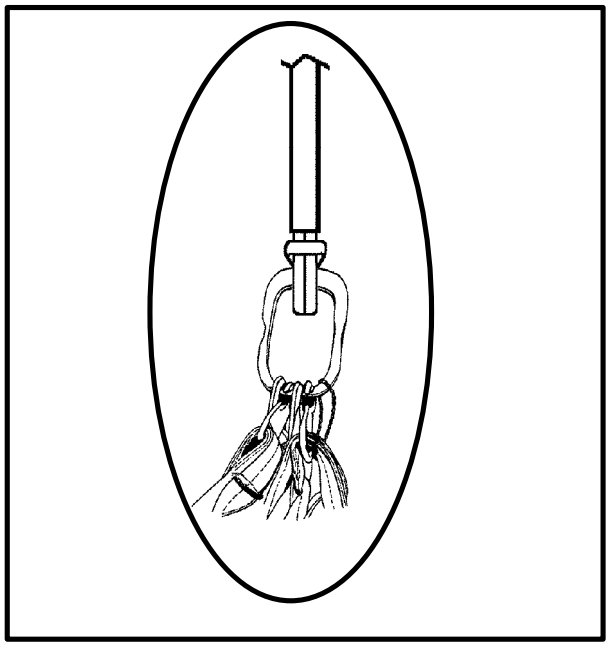

*Figure 7-13. Adding a Vertical Pendant*

**(11)** Before hookup to the aircraft, make a final inspection of the apex fitting, netting, and taping to ensure the net and the load are still secure.

**c. Repairing the Nets.** All repairs will be accomplished according to procedures in TM 10-1670-295-23 &P.

## 7-4. PLACING ALL NETTED LOADS FOR PICKUP

Loads for sling load pickup should be arranged in the

landing site for ease of pickup. Loads should be placed on level ground, away from obstacles (see Chapter 4), and prearranged for the type of aircraft being used. Multiple net loads can be carried up to the helicopter's capability. If a sling set is used to carry a cargo net, route the sling chain through the net apex fitting, and insert link 3 in the sling grabhook. Remember that the weight of the load determines the number of sling legs attached to each net. Figure 7-14 shows how more than one 5,000-pound cargo net could be carried by a 25,000-pound sling set. The weight of the load must not exceed the capacity of the sling leg(s). For example, a fully loaded 10,000-pound cargo net can be carried by all four sling legs from a 10,000-pound sling set or two sling legs from a 25,000-pound sling set.

**NOTE: When using an aircraft equipped with multiple cargo hooks, several combinations of slings and nets may be used depending on the situation. Make sure the loads will fit under the helicopter. Load oscillation will cause the loads to bump against each other if they are too close. If you are unsure of how to arrange the loads in the landing site, contact the supporting aviation unit operations department/section for additional information. USMC units contact HST personnel.**

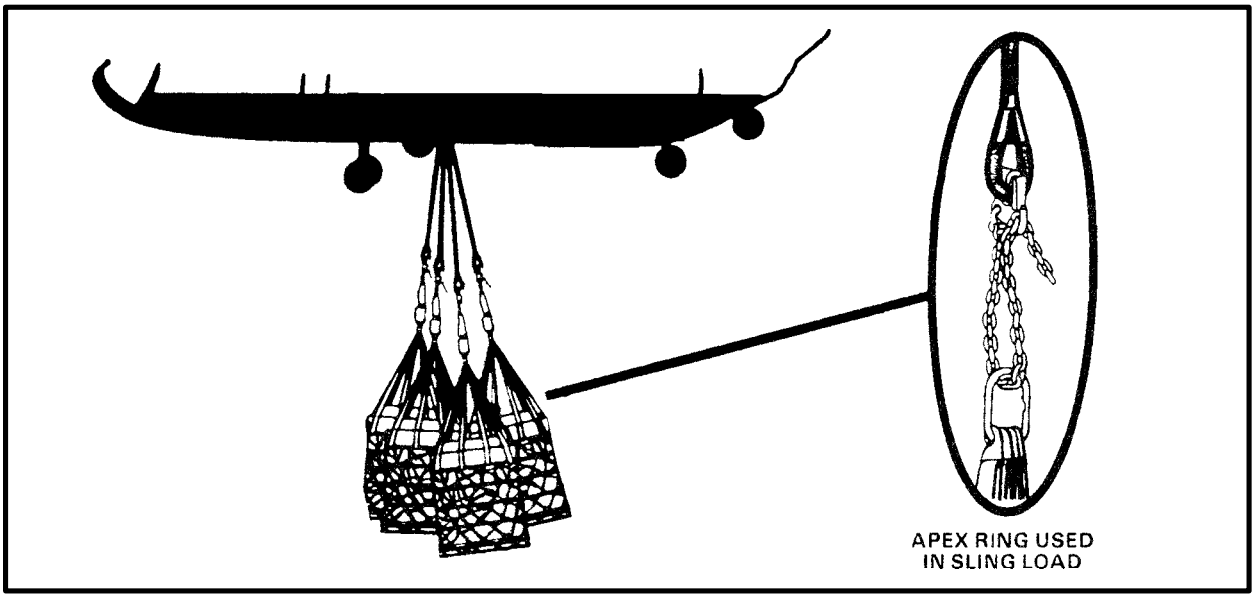


*Figure 7-14. Typical Mixed Load*

# CHAPTER 8

## A-22 CARGO BAG, PALLET SLINGS, PENDANTS, AND SUPPLEMENTAL EQUIPMENT

### 8-1. INTRODUCTION

This chapter discusses the components of an A-22 cargo bag, pallet slings, sling leg pendants, and their rigging procedures. It also discusses equipment used with slings and other lifting devices.

### 8-2. A-22 CARGO BAG

The A-22 cargo bag is an adjustable cotton duck cloth/nylon and nylon webbing container consisting of a sling assembly, cover, and four suspension webs (Figure 8-1). The bag is used to aerial deliver palletized loads, loose cargo, ammunition, drums, and other general cargo. Maximum weight capacity is 2,200 pounds. The weight of the A-22 is 58 pounds. You may rig the cargo in the bag with or without the cover. Inspect the container for serviceability in accordance with Table 2-1, Preventive Maintenance Checks and Services, in TM 10-1670-298-20&P. The best way to learn about this carrying device is to rig and derig it several times. The following steps and Figures 8-2 through 8-6 explain how to rig an A-22 cargo bag:

**a. Sling Assembly.** Spread the sling assembly on the ground near the cargo to be aerial delivered. Make sure the lateral straps are facing the ground. The fat lip portion of the friction adapter on the suspension web assembly must be face down to ensure correct rigging when the cover and suspension assembly are folded up around the load.

**b. Cover Assembly.** Center the cover (lacing loops/eyelets down) on the sling assembly, making sure that the cover edges are even with the scuff pad of the suspension web assembly.

**c. Positioning the Load.** Center the load on the canvas/nylon cover (Figure 8-2). Place the load so that any load if possible. Use cushioning material to protect the

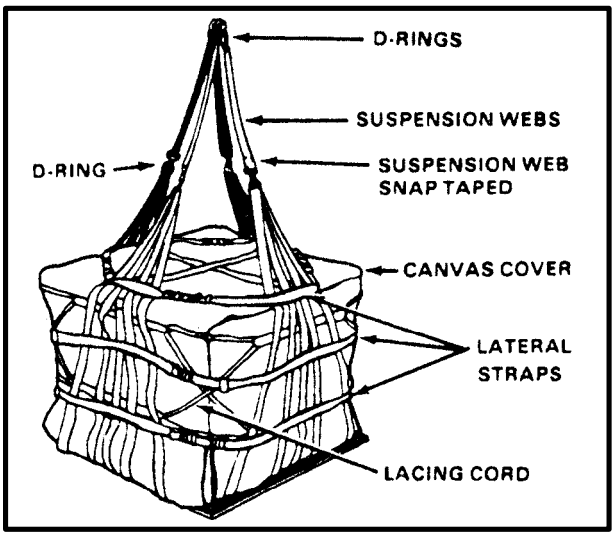


*Figure 8-1. A-22 Cargo Bag*

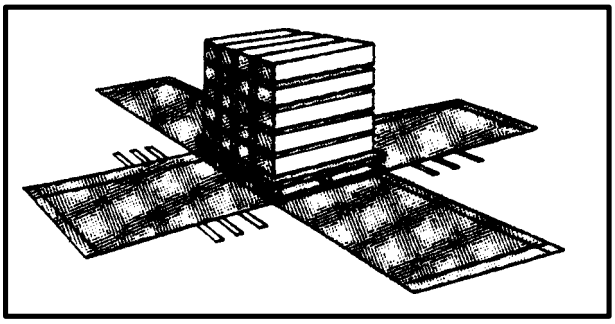

*Figure 8-2. Centered Load*

**d. Closing the Cover.** Fold the panels of the canvas/nylon cover over the top of the load. Fold any excess cover material under the top flap. Using lacing cord or Type III nylon cord, secure the cover at each corner by running the cord through the lacing loops in a figure-eight design (Figure 8-3). Tie the cord ends with a bow knot and secure. The purpose of the cord is to tighten the cover around the load so that small items cannot fall out.

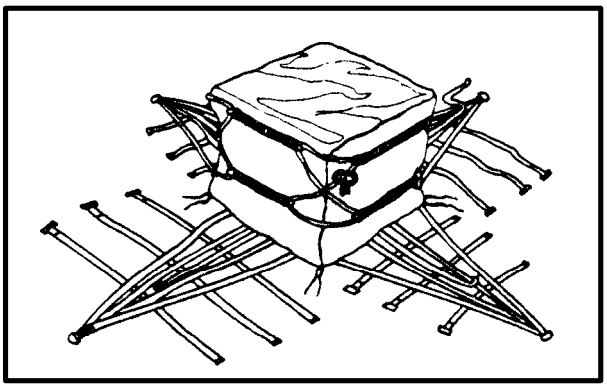

*Figure 8-3. Securing the Cover with Lacing Cord*

**e. Closing the Sling Assembly.** Route the 188-inch strap over top of the load. Route the free end under the floating safety bar (smooth side) and back over the friction adapter (rough side). Tighten the strap, fold in 4 to 5 inch loops, and secure (Figure 8-4).

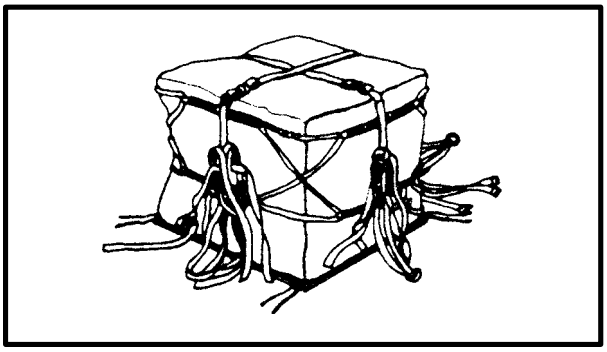

*Figure 8-4. Securing the Strap*

Pull the lower lateral straps to the corners of the load. Route the free end under the floating bar and back over the friction adapter. Attempt to tighten all four lower lateral straps equally. Repeat this step using the middle lateral straps. Fasten the upper lateral straps in the same manner as in Figure 8-5. If the load is not high enough for the upper lateral straps to go around the side of the load, pull the suspension webs to their full height and fasten the upper straps diagonally across the top corner of the load. Strap fasteners should be tightened to within 4 to 5 inches of the upper lifting legs.

**f. Attaching the Suspension Webs.** Connect the four snap fasteners on the 24-inch suspension web straps to the sling assembly D-rings. Make sure the open or hook side of each snap is facing inward. Tape each snap to prevent the hooks from becoming entangled on the nylon cord or straps.

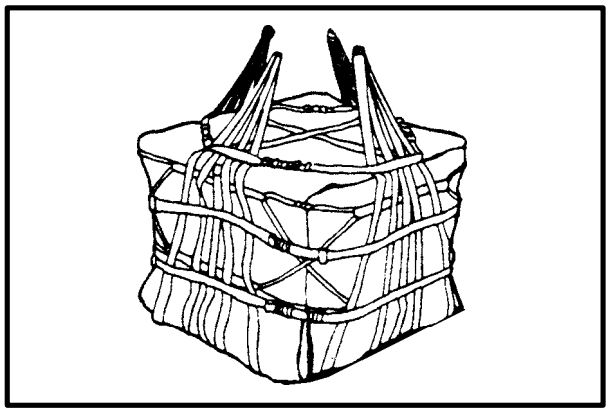

*Figure 8-5. Fastening Upper Lateral Straps*

**g. Attaching the Suspension Clevis.** Attach the four suspension web strap D-rings to a medium clevis in a clockwise sequence. Tape the nut with pressure sensitive tape. Each strap can have a maximum of one twist to connect to the clevis (Figure 8-6).

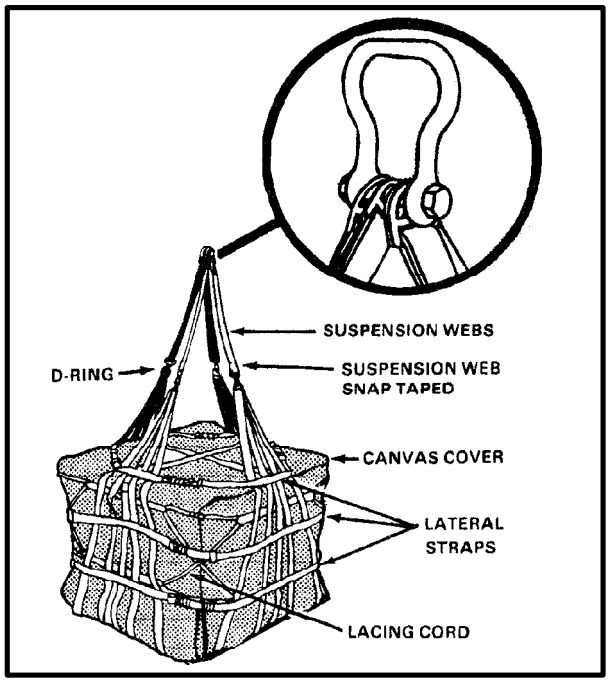


*Figure 8-6. Upper Sling and Medium Clevis*

**h. Adjusting the Lateral Straps.** Adjust all straps until the sling assembly fits snugly around the load. Fold and secure any excess webbing.

**i. Preparing the Load for Pickup.** Prepare the load for pickup by looping the chain end of a sling leg through the medium clevis and inserting link number 3 in sling grabhook. Several A-22 cargo bags can be carried at the same time (Figure 8-7). Secure the bags together with a temporary tie of Type III nylon cord around the upper lateral straps of each container at the inside corner where they meet. Attach slings or sling legs to each container through the medium clevis. Adjust the sling leg lengths so that all the bags are carried at the same level. Usually link number 3 is placed in the grabhook. This will make pickup and release easier since all loads will leave the ground at the same time. To derig the A-22 cargo bag, remove the sling legs and clevis assemblies. Untie or cut the taped or tied strings. Unfasten the web straps and spread out the cover.

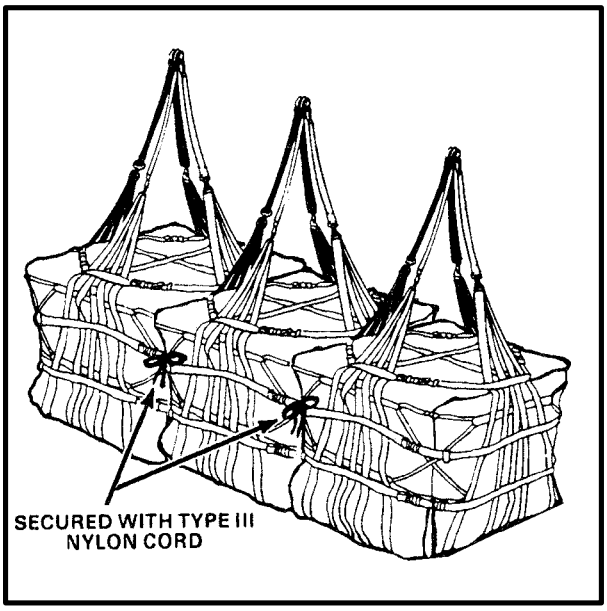


*Figure 8-7. Load of Three A-22 Cargo Bags*

## 8-3. PALLET SLINGS

A pallet sling has a 4,000-pound carrying capacity, weighs about 14 pounds, and carries a standard 40- x 48-inch pallet (Figure 8-8). The two most common models of pallet slings are the Mk100 and the Mk86. The only diference between the two is how high you can stack the cargo on the pallet. The Mkl00 carries a pallet with a load height of 48 to 70 inches and the Mk86 carries a pallet with a load 29 to 40 inches high. Figure 8-8 identifies the parts of a pallet sling. Become familiar with the parts of the Mk100 sling and its [illegible]

**NOTE: Make sure the load extends at least to the edge of the pallet wing. If the load does not extend to the end of the pallet, the cable lifting on the unsupported board ends may cause the boards to break resulting in loss of the load.**

**a. Rigging Pallet Slings.** Take the following steps when using a pallet sling to carry a load:

**NOTE: Wear leather gloves when handling the cable to protect your hands.**

**(1)** Place the bridle across the load perpendicular to the pallet boards and parallel to the pallet wings.

**(2)** Route the plastic covered wire rope under the pallet wing formed by the upper boards on the sides of the pallet. Pull the ends of the cable containing the swage stops through the tensioner (Figure 8-9).

**(3)** Feed the swage stops (adjusting beads) on the cable basket leg through the tensioner to tighten the plastic covered wire ropes against the underside of both pallet wings. Keep the bridle centered on top of the load.

**(4)** Snap shut the latch bar on the tensioner stirrup while keeping the basket leg tight against the pallet wings.

**CAUTION**

**Position the plastic covered wire ropes tightly under the pallet wings. If they are not under the pallet wings, the pallet sling could slip off the pallet when it is lifted. Secure the cargo to the pallet to prevent any of the items from sliding off in flight.**

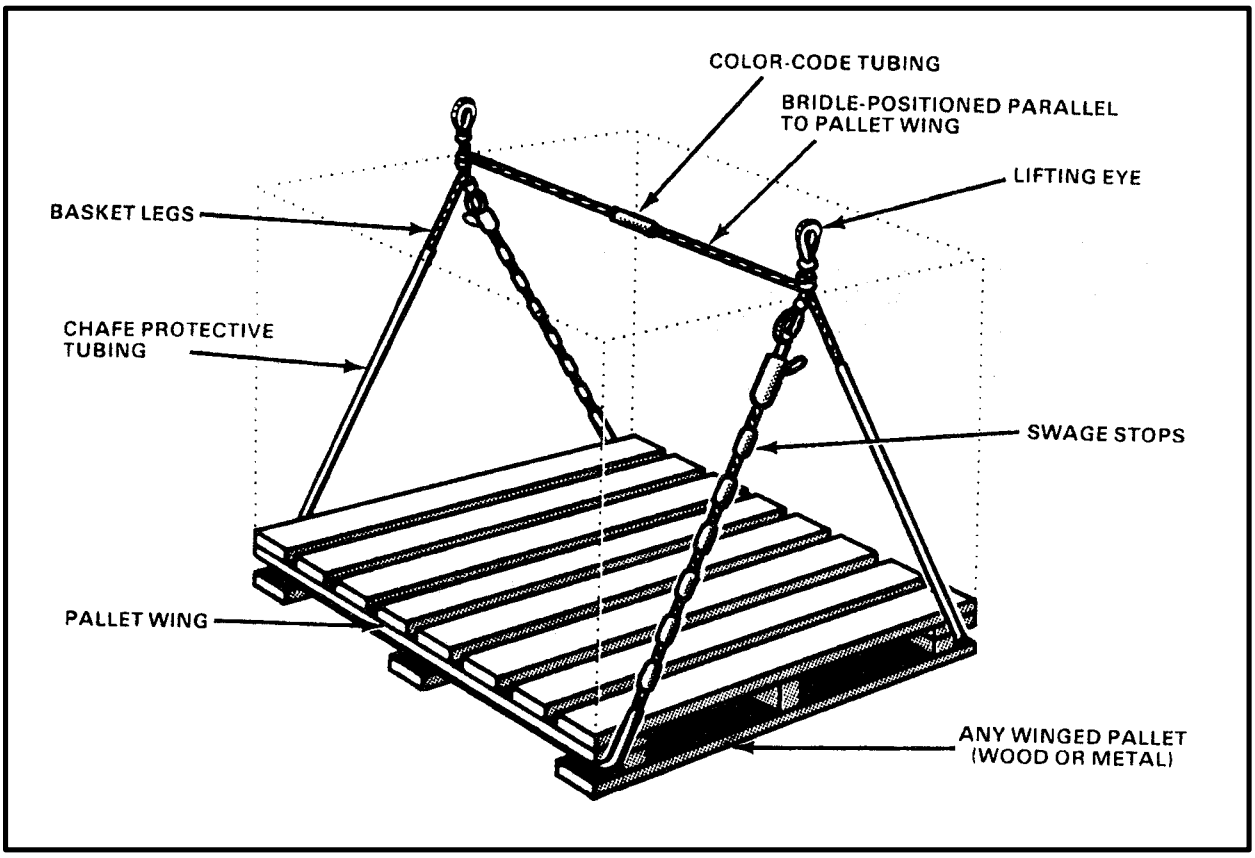


*Figure 8-8. Pallet Sling*

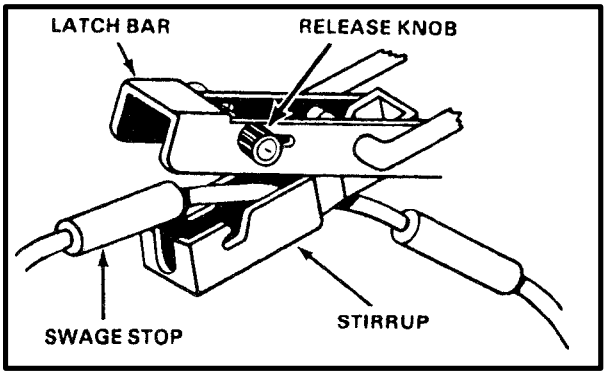


*Figure 8-9. Tensioner*

**(5)** Loop the chain end of a sling, such as the 10,000-pound capacity sling set, through each sling lifting eye as shown in Figure 8-10.

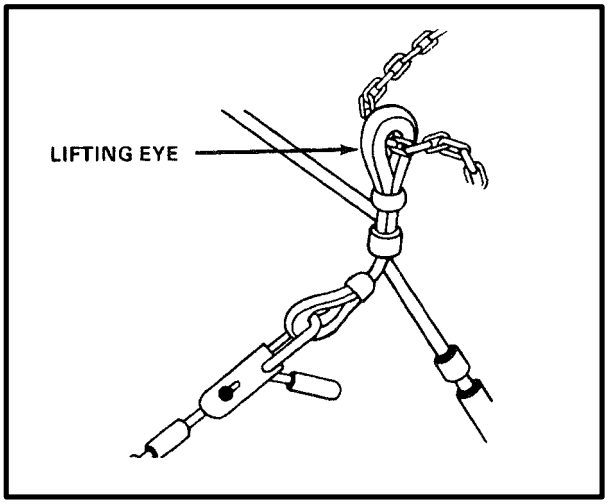


*Figure 8-10. Connecting Sling Leg Lifting Eye*

**CAUTION**

**The last swage on the end of the basket leg (wire rope leg) is a safety stop and must not be used for adjustment. Two pallets may be carried at one time using all four legs of the sling set as shown in Figure 8-11.**

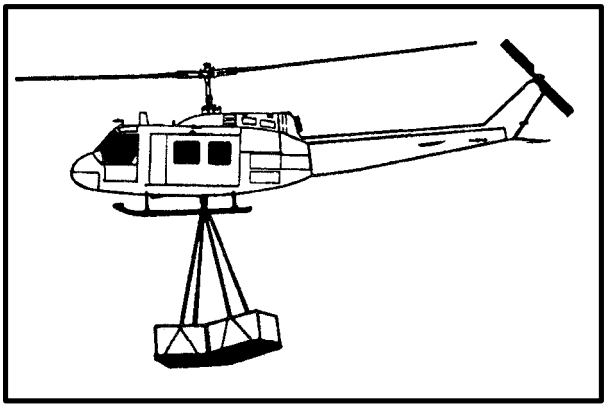

*Figure 8-11. Multipallet Load*

**b. Cleaning and Lubricating Pallet Slings.** To clean and lubricate Mk86 and Mk100 pallet slings, you need fresh water, a wire brush, dry cleaning solvent (P-D-680), clean rags, and lubricating grease and oil. Step by step procedures are as follows:

**(1)** Remove salt residue and other foreign matter from tensioners, tubing, and fittings with water or solvent, if necessary.

**(2)** Clean exposed areas of wire rope using a wire brush. Make sure all foreign matter and lubricants are removed from the valleys between the standards and the spaces between outer wires.

**(3)** Apply at least three drops of oil to the pivot areas, spring, and locking detent. Wipe off any excess oil. Exercise latches when lubricating to distribute lubricant.

**(4)** Lubricate exposed areas of wire rope.

**NOTE: Lubrication should be thin enough to penetrate the strands to the core, but not so thin as to run off the rope or not so thick that it merely covers the rope.**

**(5)** Store the sling hanging up off the ground.

**c. Inspecting Pallet Slings.** Inspect pallet slings before using and after exposure to salt water spray. Also inspect inactive pallet slings every 6 months. Use leather gloves to protect your hands from any broken wire strands. Perform the inspection by following these steps:

**(1)** Verify that the following test data is stenciled on equipment or etched on the metal test tag attached to equipment:

**(a)** Testing facility.

**(b)** Safe working load.

**(c)** Date tested.

**(2)** Verify that the date tested is within past 18 months.

**(3)** Inspect plastic tubing on basket legs for tears, cracks, and deterioration.

**(4)** Inspect rubber or plastic tubing on bridle for cracks and deterioration. Verify that color coding is correct.

**(5)** Inspect each swage stop for cracks, deformation, and looseness.

**(6)** Engage and release both tensioners on a minimum of three different swage stops. Verify that:

**(a)** Latches function easily.

**(b)** Latches lock firmly.

**(c)** Some effort is required to unlock latches.

**(7)** Inspect wire rope and fittings for:

**(a)** Outside wires worn to approximately one-half their original diameter.

**(b)** Corroded and pitted wire.

**(c)** Two or more broken wires in the valley of a rope lay.

**(d)** Distorted wire rope.

**(e)** Cracked or distorted fittings and thimbles.

**(f)** Washers installed on each leg preventing the plastic tubing from sliding over the swage stops.

**(g)** One or more broken wires at the thimble or adjacent to a swage fitting.

**(h)** Six or more broken wires in a pitch length or lay of 6 x 19 wire rope, and nine or more broken wires in a 6 x 37 wire rope.

**(i)** Torn, cracked, or worn plastic chafing tubes.

**(j)** Proper operation of over-the-center latches. If the pallet slings fail inspection, attach out-of-service tags to the slings, remove from service, and inform your supervisor.

## 8-4. REACH PENDANTS

A reach pendant is a synthetic rope assembly with an attached stiffened reach tube and a loop on each end. The built-in reach tube enables the hookup man to place the pendant's top eye on the helicopter cargo hook while the helicopter hovers at a higher distance over the load. There are two authorized reach pendants for use on sling loads, the 11,000-pound capacity Reach Pendant (11-K), the 25,000-pound capacity Reach Pendant (25-K).

**a. The 11,000-Pound Capacity Reach Pendant.** The 11-K, NSN 4020-01-365-3115, part no. DSG-5-11K, is a reach pendant approximately 5 feet long with an 11,000-pound safe working load capacity. The top eye is black and has a smaller diameter loop, while the bottom eye is green with a larger diameter loop. The safe working load capacity is stamped on the reach tube (Figure 8-12). Remove the sling set apex fitting pin; place the pendant lower eye in the apex fitting; and reinstall the apex fitting pin to use the pendant with a sling set.

**b. The 25,000-Pound Capacity Reach Pendant.** The 25-K, NSN 4020-01-337-3185, part no. BOS-14-K7, is a reach pendant approximately 5 feet long with a 25,000-pound safe working load capacity. The top eye is black and has a smaller diameter loop, while the bottom eye is black with a larger diameter loop. The safe working load capacity is stamped on the reach tube (Figure 8-12). Remove the sling set apex fitting pin; place the pendant lower eye in the apex fitting; and reinstall the apex fitting pin to use the pendant with a sling set.

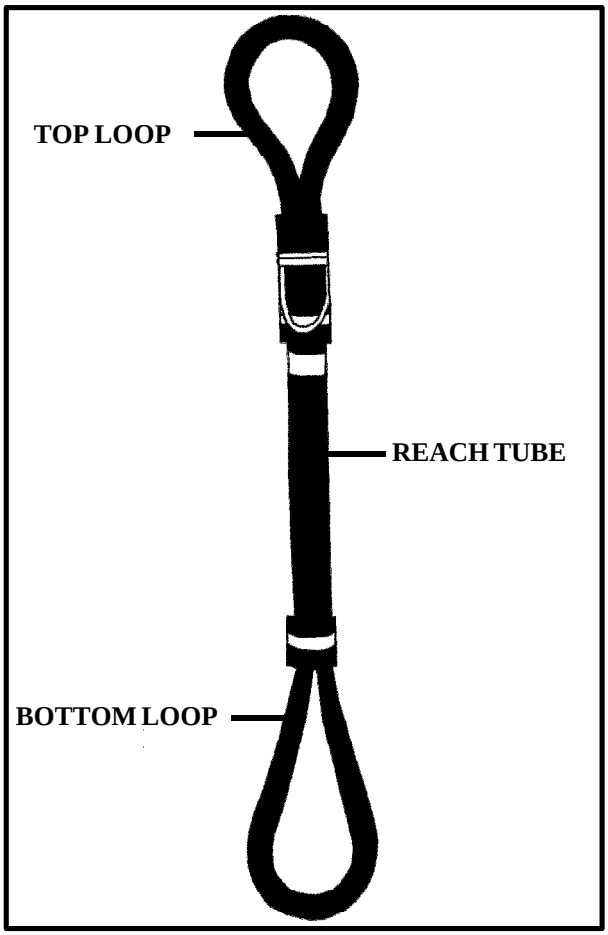


*Figure 8-12. 11,000- and 25,000-Pound Capacity Reach Pendants*

**CAUTION**

**An older, 25,000-pound capacity reach pendant, issued with an aircraft aerial recovery kit (ARK), P/N 1670EG093-1 is no longer authorized for use in sling load operations.**

**c. Inspection.** Inspect the reach pendants **BEFORE AND AFTER** use. Check for cuts and tears in the nylon-urethane plastic sheath on each loop. If the white strength member (3rd layer) is visible, remove the pendant from service.

**d. Cleaning.** Clean the reach pendant with a mixture of warm water and mild dish or laundry detergent. Oil and grease may be removed by using varsol or mineral spirits. The top and bottom eyes may be treated with silicone spray. Do not use silicone spray on the reach tube.

**CAUTION**
**Do not use chemical cleaners on reach pendants. Chemicals may weaken the strength members of the pendant. If a pendant becomes contaminated with chemicals, remove it from service.**

**e. Storage.** Store reach pendants in a clean, dry area out of direct sunlight. Prolonged exposure to sunlight will deteriorate the strength of reach pendants.

## 8-5. VERTICAL PENDANTS

Roundslings, sling legs, and Type XXVI nylon aerial delivery equipment (ADE) slings used as vertical pendants are used in some helicopter sling load operations to increase the clearance between the helicopter and the load. These pendants are helpful in situations where blowing dust/snow, tall surrounding obstacles, or reduced visibility impairs the aircrew's ability to see the load and/or hookup team. Vertical pendants are used between the helicopter hook and the sling set used to rig the load or the load itself. Vertical pendants differ from pendants provided by the aviation unit (refer to Figure 2-1) in that the vertical pendants do not have a supplemental releasable swivel hook that allows the aircrew to release the load without dropping the pendant. Vertical pendants also differ from reach pendants in that no rigid portion is provided to assist in ground hookup. Items used for vertical pendants in order of preference are the polyester roundsling, sling legs from the 10,000-pound and 25,000-pound sling sets, and Type XXVI ADE slings.

**a. Polyester Roundslings.** Polyester roundslings are used as the primary vertical pendant (Figure 8-13). Roundslings can be attached to the load using the three hitches described in Chapter 6. The lifting capacity of polyester roundslings vary with the size of the sling and the type of hitch used to attach the load. Each sling has two identification tags permanently sewn to the eye and eye sleeve identifying the size and capacity, as well as other important information necessary for the safe use of roundslings. These slings are also color coded to designate the size of the sling. Refer to Table 8-1 for sling lengths and lift capacities.

**(1) Inspection.** Inspect the polyester roundsling before and after each use. Remove the roundsling from service if any of the following are found:

**(a)** Both identification tags are missing or are not readable.

**(b)** Acid or alkali burns.

**(c)** Melting, charring or weld splatter of any part of the roundsling.

**(d)** Holes, tears, cuts, snags, embedded particles, or abrasive wear that exposes the core fibers.

**(e)** Broken or worn stitching in the cover that exposes the core fibers.

**(f)** Knots in any part of the roundsling.

**(g)** Distortion, excessive pitting, corrosion or broken fitting(s).

**(h)** Any condition which causes doubt as to the strength of the roundsling.

**CAUTION**
**Do not drag roundslings on the floor or over rough sufaces. Do not twist or join roundslings together using knots.**

**(2) Storage.** Store roundslings in a clean, dry,

**Table 8-1. Safe working loads for Polyester Roundslings**

| PART NO. | LENGTH | COLOR | LIFT CAPACITY BY HITCH TYPE | | | WEIGHT |
|---|---|---|---|---|---|---|
| | IN FEET | | CHOKED | VERTICAL | BASKET | IN POUNDS |
| PRS2E008 | 8 | GREEN | 4,200 | 5,300 | 10,600 | 4 |
| PRS2E017 | 17 | GREEN | 4,200 | 5,300 | 10,600 | 10 |
| PRS3E008 | 8 | YELLOW | 6,700 | 8,400 | 16,800 | 5 |
| PRS3E017 | 17 | YELLOW | 6,700 | 8,400 | 16,800 | 11 |
| PRS5E030 | 30 | RED | 10,600 | 13,200 | 26,400 | 26 |
| PRS7E065 | 65 | BLUE | 17,000 | 21,200 | 42,400 | 75 |
| PRS7E70 | 70 | BLUE | 17,000 | 21,200 | 42,400 | 81 |

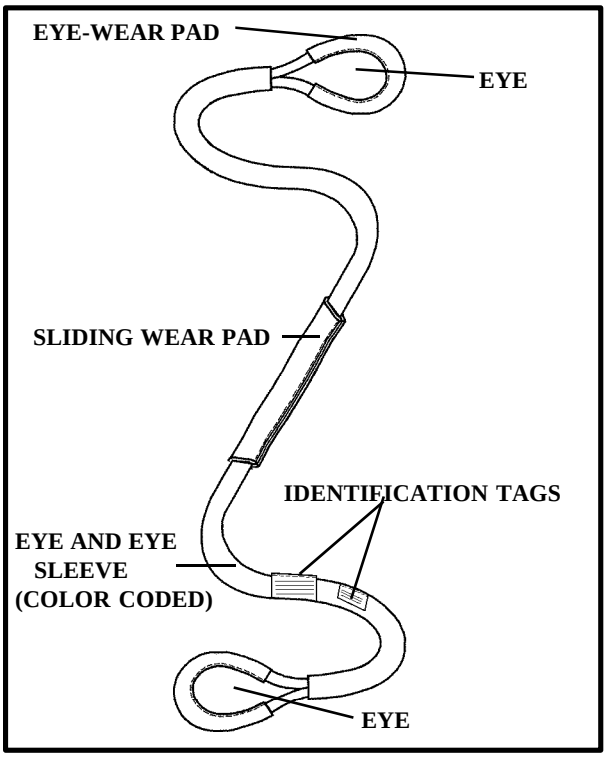


*Figure 8-13. Polyester Roundsling*

cool area out of direct sunlight. Prolonged exposure to sunlight will deteriorate the strength of roundslings.

**b. 10,000- and 25,000-Pound Capacity Sling Sets.** Each nylon rope sling leg has stored energy because the nylon rope stretches when carrying a load. If the lifting provision on the load, or the sling leg itself, were to break, this stored energy would cause the sling leg to rebound upward and possibly damage the helicopter. Therefore whenever possible, avoid connecting single sling legs together end to end. If your situation requires more than one sling leg length, join pairs of sling legs side by side using a sling set apex fitting instead of just single sling legs connected end to end. The safe working load capacities of a sling leg from a 10,000- or 25,000-pound capacity sling set when used as a vertical pendant are 3,800 and 7,500 pounds, respectively. Sling legs in a sling set are generally routed at an angle from the lifting provision to the apex fitting. The resultant force on the sling leg is a combination of both vertical and horizontal forces. The maximum safe working load of the sling legs in a sling set, identified in Chapter 6, is based upon the maximum sling leg angle permitted. Since the sling leg pendant is only used in a vertical direction, the maximum capacity of a sling leg pendant is greater than the

maximum capacity of the same sling leg when used as one of the sling legs in a sling set. This section contains rigging and safe working capabilities of sling legs that are used as vertical pendants. Do not confuse the sling capacities in this section with the capacities of the sling legs in Chapter 6. Chapter 6 contains rigging and safe working capacity information for the sling legs when used as a part of a sling set.

**c. Nylon and Chain Multileg Sling Set.** The nylon strap portion of the sling leg does not stretch as much as a nylon rope sling leg. Single legs from the multileg sling set can be connected end to end using a large clevis (MS 70087-3) or a Type IV link connector. Each sling leg, when used as a vertical pendant, has a safe working load capacity of 8,800 pounds.

**d. Flat-Web Nylon Slings.** Type XXVI nylon multiloop aerial delivery slings are discussed in this section. A colored thread, stitched lengthwise down the middle of the strap, identifies the strap as a Type XXVI nylon multiloop line.

**(1)** Use a Type IV link connector or large clevis (MS 70087-3) to join the ends of two-loop Type XXVI nylon multiloop lines.

**(2)** Multiloop lines that are made of three or more loops will not fit in the Type IV link connector. Instead, use a 5 1/2-inch, two-point link to join the ends together. The 5 1/2-inch, two-point link has a safe working load capacity of 12,500 pounds. Therefore, the safe working load capacity of any sling leg pendant using a two-point link cannot exceed 12,500 pounds.

**(3)** The Type IV link connector has a maximum safe working load capacity of 12,500 pounds. Therefore the safe working load capacity of any sling leg pendant using a Type IV link connector cannot exceed 12,500 pounds.

**(4)** Safe working load capacities for Type XXVI nylon multiloop lines when used as vertical pendants are shown in Table 8-2.

**Table 8-2. Safe Working Loads for Vertical Pendants**

| Safe Working Loads for Vertical Pendants (Type XXVI Multiloop Lines) | |
|---|---|
| **NUMBER OF LOOPS** | **LOAD RATING (LB)** |
| **2** | **8,900** |
| **3** | **13,500** |
| **4** | **17,800** |
| **6** | **27,000** |
| **9** | **42,000** |

## 8-6. SUPPLEMENTAL EQUIPMENT

Supplemental equipment is defined as items that are used with slings and other lifting devices to guard against damage to equipment and to expedite the sling load operation by minimizing the number of personnel required.

**a. Tape.** Pressure-sensitive tape is used to hold loose equipment in place and also to provide temporary restraint that will break away when the load is lifted off the ground. Do not use tape as a load bearing item. If you want to form a piece of tape into a string to tie together, just fold a piece of tape lengthwise. The tape should be woven cloth tape (duct tape), pressure-sensitive, waterproof, and at least 2 inches wide. The tape has a breaking strength of 80 pounds. Some of the most common applications of tape are as follows:

**(1)** Several wraps of tape are used to gather together and hold the sling legs on top of the load after the sling is attached to the load and before it is hooked up to the helicopter. This breakaway technique taping reduces the risk of the sling legs becoming entangled during hookup. The tape will break, freeing the sling legs during the lifting operation.

**(2)** To prevent loose chain ends from whipping and damaging equipment.

**(3)** To attach protective padding to slings or the load itself.

**(4)** To secure chain loop or sling legs in place before load is lifted.

**b. Cotton Webbing.** Cotton webbing is used as an alternative to pressure-sensitive tape. The 1/4-inch wide Type I cotton webbing (Figure 8-14) is rated at 80 pounds breaking strength. Cotton webbing is also used to combine and hold the legs of the cargo sling on top of the load after the sling legs are attached. Once tension is applied to the sling, the webbing will break, freeing the sling legs for normal weight-carrying configuration. This breakaway technique reduces the risk of the sling legs fouling on the load during hookup and lift-off.

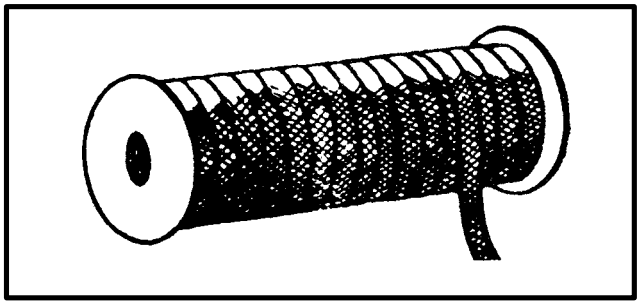

*Figure 8-14. 1/4-Inch Cotton Webbing*

**c. Nylon Cord.** Type III nylon cord has a breaking strength of 550 pounds. Because of its high breaking strength, nylon cord is not used in situations that require the breakaway technique. Nylon cord is used to secure loose equipment, padding, and excess chain.

**d. Protective Padding.** To prevent chafing damage to equipment during sling load operations, any chain end of a sling connected to or resting against the lightweight metal surface of a piece of equipment should be wrapped with padding to prevent damage. The padding is also wrapped around the nylon portion of the sling legs and taped or tied to protect the legs from sharp objects which could damage the sling legs or cause fusing or melting of the nylon due to friction. The padding may also be secured to the load to prevent damage. Cellulose padding is commonly used and recommended. Cellulose, however, can easily be damaged by water. Felt sheeting may also be used as padding. Other materials may be used, such as rags and inner tubes, but they must be able to withstand rotor wash and wind during flight.

**e. Clevises.** Clevises may be used to rig equipment that does not have lifting shackles attached to the lifting provisions or lifting provisions not large enough for the chain to pass through the lifting points. Large, medium, small, and small screw-pin clevises may be used in sling load operations.

**CAUTION**

**The nut and bolt assemblies of different sized clevises are not interchangeable. See Appendix B for bolt and nut NSNs for each clevis assembly.**

**(1) Large Clevis.** The large clevis (Figure 8-15) can be used to lift a load that weighs up to 12,500 pounds if it has only one attachment point. If the load has four attachment points and a large clevis is used at each lifting point, the maximum loadweight that can be lifted is 31,500 pounds. If the load has two or three attachment points, the maximum load weight is 15,750 and 23,625 pounds, respectively. The large clevis is often used as a junction point when suspending an accompanying load under a howitzer. The large clevis uses a 1-inch bolt and nut.

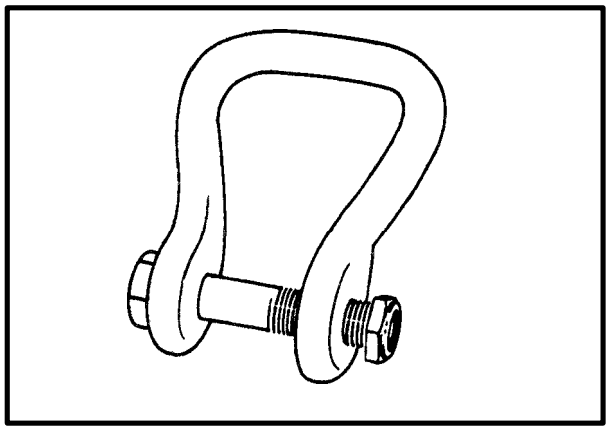

*Figure 8-15. Large Clevis Assembly (Part No. MS 70087-3)*

**(2) Medium Clevis.** This clevis (Figure 8-16) can lift single lift point loads up to a maximum weight of 6,250 pounds. It also can be used to attach sling legs of a four-legged sling set to a load weighing up to 15,000 pounds. If the load has two or three attachment points, the maximum load weight is 7,500 and 11,250 pounds, respectively. It is commonly used to join the four suspension web straps on the A-22 cargo bag. The medium clevis has a 3/4-inch bolt and nut.

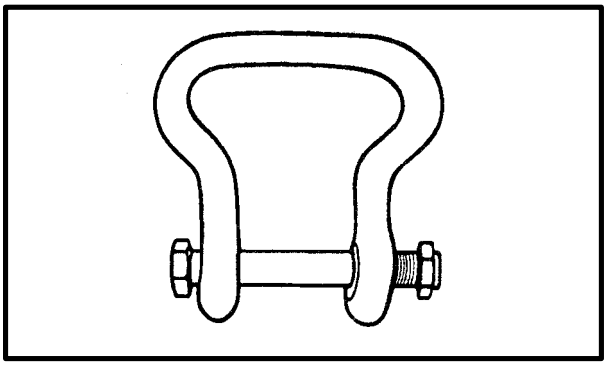

*Figure 8-16. Medium Clevis Assembly (Part No. MS 70087-2)*

**(3) Small Clevis.** The most common use of the small clevis (Figure 8-17) is on the M151 truck wheel hubs. The maximum load weight that can be lifted using a small clevis at the ends of a four-legged sling set is 15,000 pounds. If the load has two or three attachment points, the maximum load weight is 7,500 and 11,250 pounds, respectively. The small clevis can also be used to lift a load that weighs up to 6,250 pounds if it has only one attachment point. The small clevis is identified by a 5/8-inch bolt and nut.

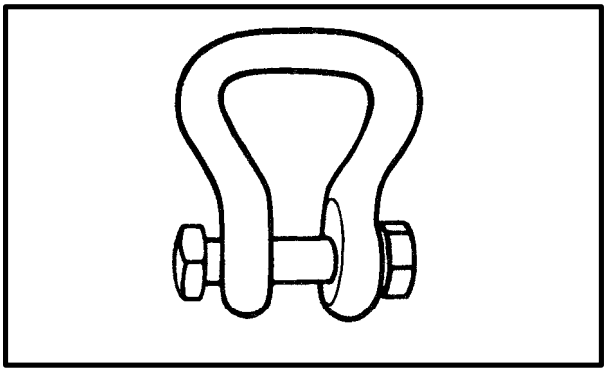

*Figure 8-17. Small Clevis Assembly (Part No. MS 70087-1)*

**(4) Anchor Shackles** (Figure 8-18). Anchor shackles are used to attach sling legs to equipment that does not have shackles attached to the lift provisions. After installing the shackle, place the nut on the bolt and safety the nut with the cotter pin. This keeps the pin from backing out in flight. The safe working load capacities of several sizes of anchor shackels are listed in Table 8-3. The capacity of the anchor shackle is marked on the shackle.

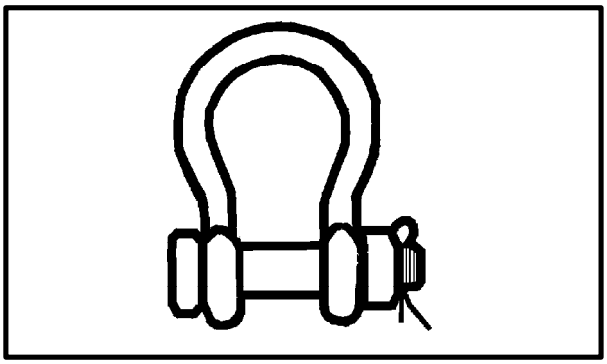

*Figure 8-18. Anchor Shackles*

**f. 15-Foot Tie-Down Strap.** The 15-foot tie-down strap is made of 1 3/4-inch wide Type X or Type XV cotton webbing with a D-ring at one end. The cargo tie-down straps are used with quick-fit strap fasteners and load binders to secure bulk or palletized cargo making up a single load or for lashing cargo to a vehicle.

**g. Quick-Fit Strap Fasteners.** The quick-fit strap fasteners are fitted on the strap's free ends. Load binders attach the strap fastener to an attachment point. Each fastener consists of a metal fitting forged in a V-shape with a double bar and a friction grip crossbar. Usually, load binders are used to tighten a tie-down strap that is passed through, around, or over cargo items. When load binders are not available, the quick-fit strap fastener can be used for this purpose. The procedure for using the quick-fit strap fastener is outlined in the following steps:

**(1)** Pass the free end of the 15-foot strap around or through the first fitting or fixture (or through its own D-ring) and pull it tight.

**(2)** Pass the free end of the strap between the lower double bar and friction grip crossbar of the strap fastener, then around or through the second fitting or fixture.

**(3)** Pass the free end of the strap back between the lower double bar and friction grip crossbar of the strap fastener.

**Table 8-3. Safe Working Load Capacities for Anchor Shackles**

| PART NUMBER | NSN 4030- | DIA. (INCH) | ONE ATTACHMENT POINT (POUNDS) | TWO ATTACHMENT POINTS (POUNDS) | THREE ATTACHMENT POINTS (POUNDS) | FOUR ATTACHMENT POINTS (POUNDS) |
|---|---|---|---|---|---|---|
| G-2130-3/8 IN | 00-378-4842 | 3/8 | 2,000 | 2,570 | 3,850 | 5,100 |
| G-2130-1/2 IN | 00-804-2307 | 1/2 | 4,000 | 5,100 | 7,700 | 10,300 |
| G-2130-5/8 IN | 00-804-2308 | 5/8 | 6,500 | 8,300 | 12,500 | 16,700 |
| G-2130-3/4 IN | 00-343-5433 | 3/4 | 9,500 | 12,200 | 18,300 | 24,400 |
| G-2130-7/8 IN | 00-373-1123 | 7/8 | 13,000 | 16,700 | 25,000 | 33,400 |
| G-2130 8-1/2 TON | 01-282-3470 | 1 | 17,000 | 21,800 | 32,700 | 43,600 |

**(4)** Apply tension by pulling on the free end of the tie-down strap.

**(5)** Pass the free end of the strap back through the strap fastener between the upper double bar and friction grip crossbar.

**(6)** Cinch the strap by holding tension on its free end and sliding the strap fastener up against the fitting or fixture.

**(7)** Roll and tape the loose end of the strap.

**h. Load Binder.** The load binder (Figure 8-19) is a locking device which is used to tighten and secure lashing straps. Each binder consists of two body plates which attach at one end to a short hook and at the other end to a handle that holds a pivoting long hook. Use the following instructions to use a 15-foot tie-down strap with the quick-fit strap fastener, load binder, and a 15-foot cotton webbing tie-down strap (Figure 8-20).

**(1)** Pass the free end of the tie-down strap up, over, around, or through the tie-down provision, then back toward the tie-down strap D-ring.

**(2)** Attach a quick-fit strap fastener, with the protruding edge of the friction bar facing up, to the free end of the tie-down strap.

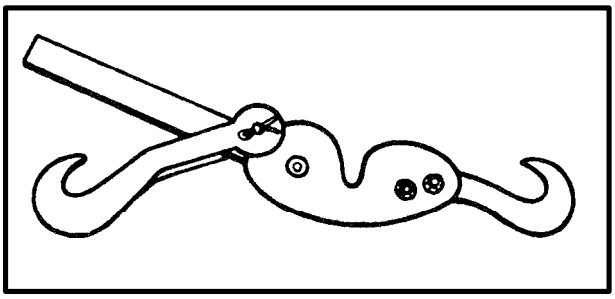

***Figure 8-19. Load Binder***

**(3)** Attach the D-ring of the tie-down strap to one open hook of the load binder and the D-ring of the strap fastener to the other open hook.

**(4)** Apply tension to the lashing by pulling on the free end of the tie-down strap and closing the load binder while pulling on the free end of the tie-down strap.

**(5)** Fold the excess strap and place it alongside the load binder handle. Then tape the folded excess strap by passing tape around the strap load binder and load binder handle. The combination of tie-down strap, load binder, and quick-fit fastener is most often used to secure loose cargo in a vehicle or trailer.

**i. CGU-l/B Cargo Tie-Down Strap.** The CGU-l/B 5,000-pound capacity cargo tie-down strap is used to re-

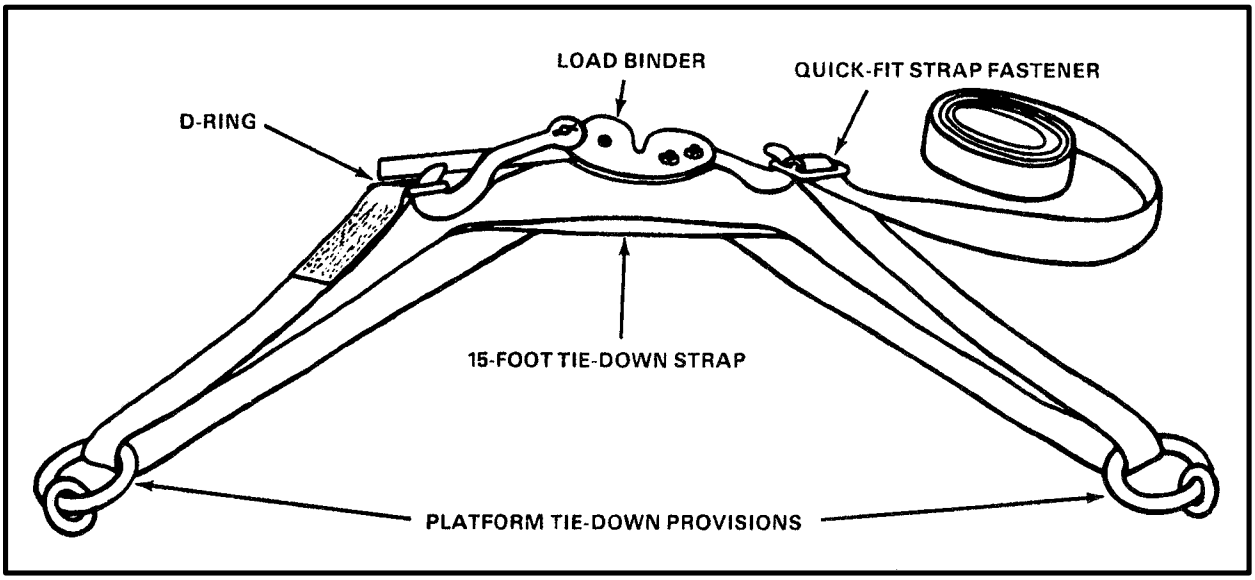


*Figure 8-20. Combining Tie-Down Strap, Load Binder, and Quick-Fit Fastener*

strain cargo in vehicles and trailers (Figure 8-21). The tie-down is also used between the prime mover and accompanying load, such as M998 truck and M167AA gun to prevent the truck and trailer from pivoting in flight. To operate the tie-down strap, attach the fixed hook of the strap to the cargo or over the cargo to a tie-down ring if the cargo does not have tie-down provisions. Then attach the hook and ratchet end to a tie-down. Make sure that the spool on the ratchet is completely unwound. Apply tension by pulling on the end of the webbing that passes through the spool. While holding the webbing, operate the handle with a rocking motion to tighten spool. Do not force with added leverage. To release, depress the release bar in handle while turning handle to the full open position.

**j. Special Webbing Strap.** The 5,000-pound capacity special webbing strap (Figure 8-22) is similar to the CGU-l/B cargo tie-down strap. The main differences are the swivel hooks and the short strap attached to the ratchet device. Two moveable nylon sleeves on the 20-foot strap section can be positioned at chaffe points on the load to protect the strap from damage.

**k. Field Expedient Drogue Device.** Adding a field expedient drogue device may increase the stability of low-density loads. Figure 8-23 illustrates a drogue device fabricated from a tire. Cut a tire in half and bolt the ends of a 30-inch length of chain to each side of one end of the tire to form a loop. Bolt the ends of another 30-inch length of chain to each side of the other end of the tire to form a second loop. Attach one end of a 6-foot length of chain or 1/2-inch tubular nylon webbing to the two loops of chain on the tire. Attach the other end of the chain or webbing to one of the bottom corners of the load. Make sure the distance from the tire to the load is less than 5 feet so the tire will not become entangled on the helicopter.

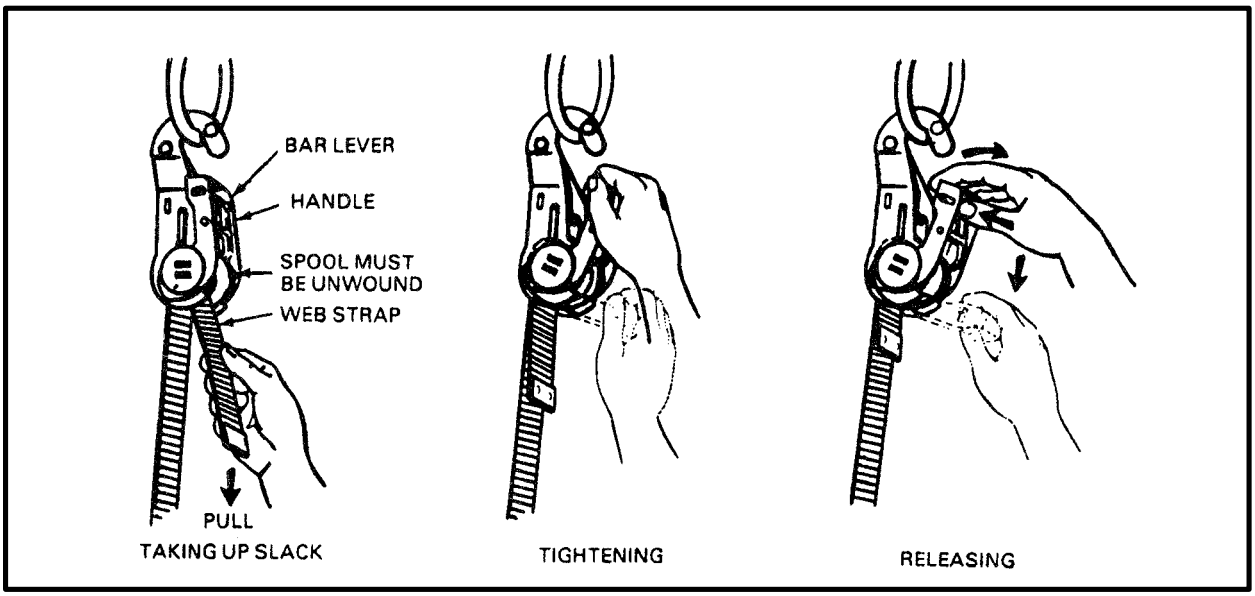


*Figure 8-21. CGU-l/B 5,000-Pound Capacity Tie-Down Strap*

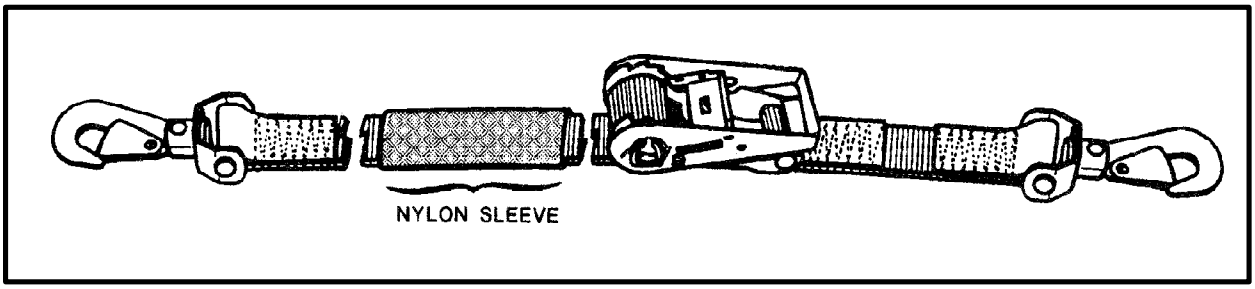


*Figure 8-22. Special Webbing Strap (P/N 9392419)*

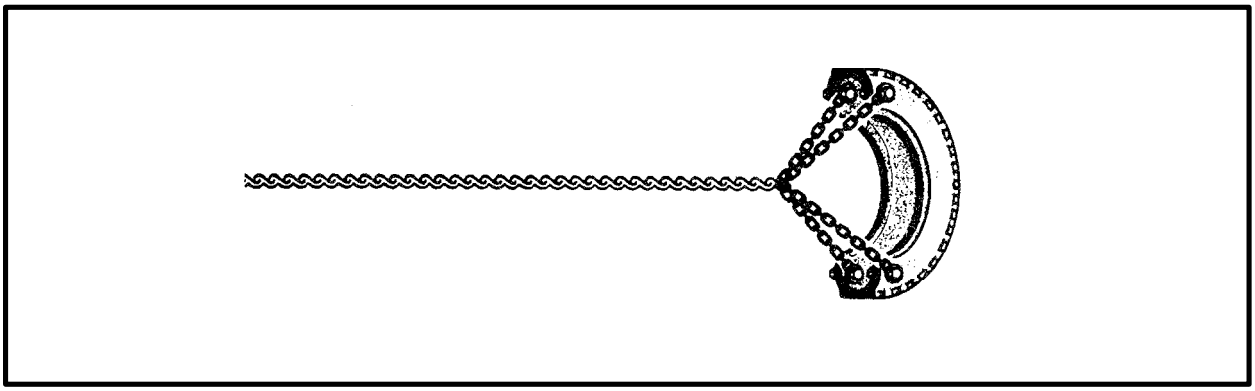

*Figure 8-23. Field Expedient Drogue Fabricated from a Tire*

# CHAPTER 9

# VERTICAL REPLENISHMENT (USN, USMC, USCG)

## 9-1. INTRODUCTION

Transferring cargo from or to a ship by helicopter using a cargo sling is called vertical replenishment (VERTREP). VERTREP is often more practical than receiving the helicopter on deck, so it is used in most Navy and Coast Guard sling load operations. VERTREP increases the capability of the alongside replenishment operation. This chapter provides general instructions and specific rigging procedures for VERTREP operations. For more detailed information on VERTREP, refer to NWP 14, NWP 42, or COMDTINST M3710.2. Should conflicts arise between the procedures found in this chapter and those found in NWPs and COMDTINSTS, the NWPs and COMDTINSTs will govern. The decision to land the aircraft or use VERTREP will depend on various factors: size, shape, and weight of the cargo; stability of the flight deck; and urgency of the mission.

## 9-2. VERTICAL REPLENISHMENT AIRCRAFT

The Navy and Coast Guard use several aircraft for VERTREP operations. The H-46 is the most widely used Navy VERTREP helicopter; its tandem rotor configuration allows maneuverability without the wind restrictions of tail rotor helicopters. Therefore, the ships may vary course and speed while undergoing VERTREP. The H-2, H-3, and H-60 helicopters have VERTREP capabilities but their use is limited due to mission design and requirements. The H-53 is used by the Marine Corps for vertical lifts and by the Navy for vertical onboard delivery (VOD) operations. The UH-1 has a weight-limited VERTREP capability. All Coast Guard helicopters have VERTREP capability. Refer to NWP 42, COMDTINST M3710.2, and Chapter 2 of this manual for each helicopter's general capabilities.

## 9-3. COAST GUARD DANGEROUS CARGO VERTREP

When moving dangerous cargo, the provisions of AFJMAN 24-204 must be followed. Although AFJMAN 24-204 specifically prescribes rules for carrying dangerous materials internally aboard military aircraft, the Coast Guard applies the rules to sling load cargo as well. Air movement of hazardous materials (internal and external) will be in accordance with AFJMAN 24-204. However, the preferred method to move such cargo is by sling loading. Waivers to the provisions of AFJMAN 24-204 and authorization to move hazardous materials not listed in AFJMAN 24-204 may be requested from Commandant (G-OAV) via the chain of command.

**NOTE: When operating in remote areas, when the mission is adversely affected, or when the health and welfare of personnel is jeopardized by a delay in obtaining a waiver, the Commanding Officers of the air capable cutters may authorize the movement of "single dagger" items (as annotated in Table 4-1, AFJMAN 24-204) aboard their deployed aircraft.**

## 9-4. FACTORS AFFECTING VERTREP

**a. Wind.** For VERTREP, the helicopter must hover over the ship. The difference between engine power required to hover without a load and maximum available engine power is the excess power which can be used to carry cargo. A relative wind of 15 to 30 knots is considered ideal. The helicopter should take off, make approaches, and hover into the relative wind.

**b. Temperature and Atmospheric Pressure.** Any increase in temperature or decrease in atmospheric pressure will decrease maximum lift capability. This loss in lift is a result of reduced engine performance and reduced aerodynamic performance of the rotor blades. Thus, a cold, dry day with high barometric pressure and

a strong, steady relative wind is ideal for VERTREP.

**c. Helicopter Fuel Loading.** A full load of fuel adds substantial weight to the helicopter and reduces the amount of cargo that can be lifted. As the fuel is used, more cargo can be lifted. The amount of cargo to be transferred, distance to be flown, and wind and weather conditions are some of the factors to be considered in determining the fuel load.

## 9-5. VERTICAL REPLENISHMENT EQUIPMENT

Certain cargo-handling, load-carrying, and auxiliary equipment is needed for VERTREP. Some items have been used for alongside replenishment or cargo handling for a number of years. A few have been designed specifically for VERTREP. The VERTREP equipment is generally different from other equipment used to sling load cargo and equipment (Chapters 6, 7, and 8).

**a. Pallets.** Four-way pallets are platforms 40 inches by 48 inches by approximately 4 inches high, constructed of welded steel (Figure 9-1) or hardwood, usually oak. They are designed to be lifted by a forklift truck from either side. Cargo should be banded or strapped to pallets to provide a stable and secure load.

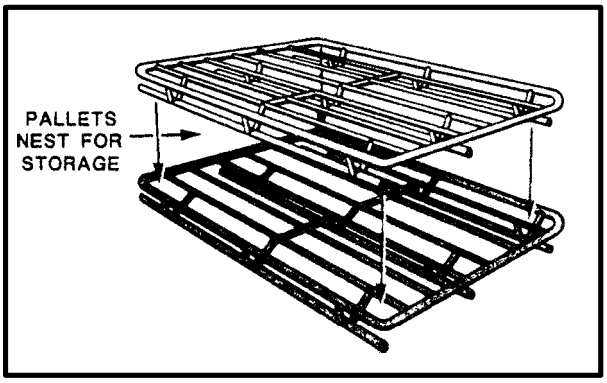


*Figure 9-1. Four-way Pallet (Nestable Tubular Steel)*

**b. Cargotainers.** A cargotainer is a pallet with wire mesh sides that fold down for compact storage (Figure 9-2). The cargotainer is ideal for transferring loose and odd-shaped items.

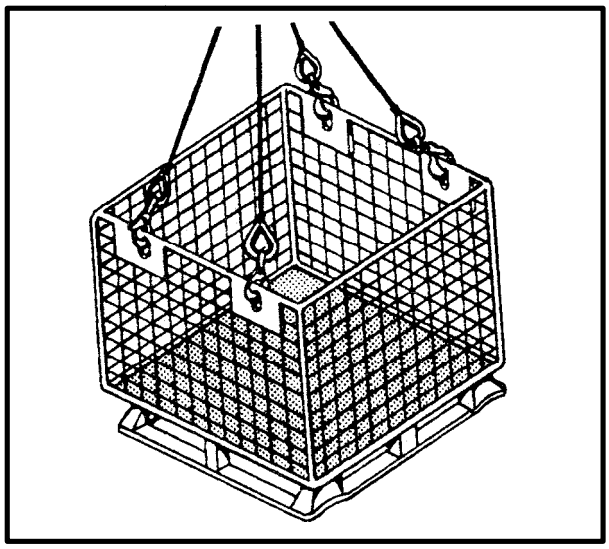

*Figure 9-2. Hoisting Sling Hooked to Cargotainer*

**c. Cargo Nets.** Most VERTREP cargo is moved in nylon cargo nets made of 1 1/2-inch wide nylon webbing (Figure 9-3). Overall net size is 12 feet by 12 feet or 14 feet by 14 feet. Oval metal rings on each of the four corners are used to lift the net. Rough handling, such as dragging, causes extensive damage to nylon webbing and should be avoided.

*Figure 9-3. Nylon Cargo Net, Mkl06 Mod 0 Cargo Pallet Net, and Becket*

**d. Pallet Sling.** The pallet sling is a two-loop wire rope sling used to lift loaded pallets without using a cargo net (Figure 9-4). Lifting eyes provide the attachment points for the hoisting sling used to carry the load by helicopter. There are four models of this sling; each model accommodates a different size load and a color-coded tube on the cable between the two lifting eyes indicates the sling size (see Table 9-1).

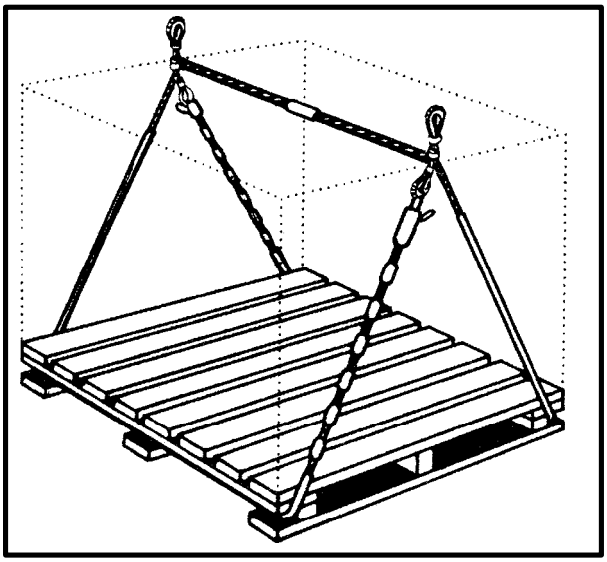

*Figure 9-4. Pallet Sling*

**e. Hoisting Sling Mk105.** This sling, called the multileg-pole pendant or reach pendant, is approved for all types of VERTREP loads up to 6,000 pounds (Figure 9-5). The Mk105 consists of two parts: the pendant section and the leg assemblies.

**(1)** The pendant, made of 1 1/8-inch diameter, double-braided nylon rope, is approximately 12 feet long. The silicone-impregnated eye at the lower end of the pendant aids in removing the attached legs from the pendant. The upper eye is encased in flexible tubing and allows the pendant to slip off or on the cargo hook when released or attached. A 6-foot plastic reach tube encases the upper portion of the pendant and provides the rigidity needed to place the upper eye over the cargo hook.

**(2)** The legs are made of color-coded, 15/16-inch diameter, double-braided nylon rope with an open eye splice at one end and a positive-closing, self-locking cargo hook at the other end. The regular leg (orange) is 85 inches long and the long leg (green) is 116 inches long. As many as six legs may be attached to the pendant's lower eye by means of choker hitches (Figure 9-5 inset). The number of legs used is determined by the number of attachment points on the load. Four regular legs are provided with each pendant at the time of issue. The safe working load for a Mk105 pendant with

**Table 9-1. Sling Models and Sizes**

| Sling Models and Sizes | | | | |
|---|---|---|---|---|
| **Mk** | **Color of Coded Tubing** | **Load Height on 40 X 48 inch Pallet (inches)** | **Capacity (Pounds)** | **Weight (Pounds)** |
| | | | | |
| 85 | Red | 13 | 2,200 | 13 |
| | | 16 | 2,800 | 13 |
| | | 20 | 3,400 | 13 |
| | | 24 | 3,950 | 13 |
| | | 26 to 31 | 4,000 | 13 |
| 86 | Black | 29 to 40 | 4,000 | 13 |
| 87 | Green | 36 to 50 | 4,000 | 14 |
| 100 | Yellow | 48 to 70 | 4,000 | 15 |

a single leg is 4,000 pounds. The maximum capacity of the Mk105 pendant is 6,000 pounds when two or more legs are attached. The nylon rope also acts to absorb the shock of the load during pickup by the helicopter. As the helicopter lifts up, the weight of the load is transferred from the flight deck to the pendant. This action stretches the pendant and the result is a smooth load pickup with minimum shock and stress to the aircraft and load.

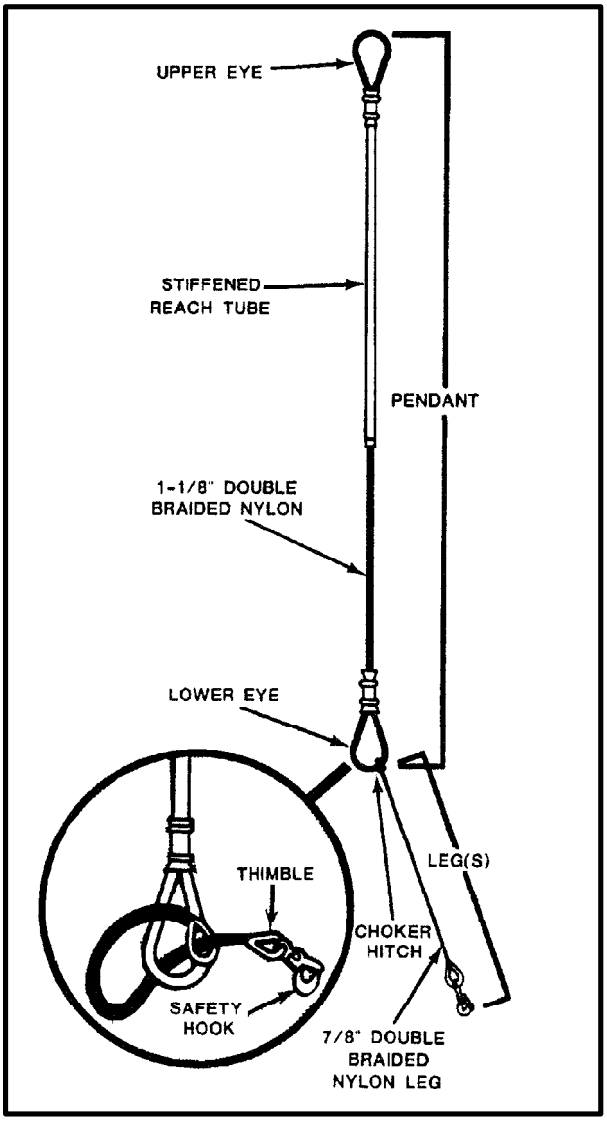


*Figure 9-5. Mk 105 Hoisting Sling (Multi-leg Pole)*

**f. Hoisting Sling Mkl28 Mod 0.** This sling consists of two parts: the pendant and the legs (two per unit). The pendant has a spliced eye at each end and a stiffening tube to allow for extended hookup (Figure 9-6). One eye attaches to the cargo hook. The other eye is for attachment of the leg assembly. The legs, color-coded green, have a spliced eye at one end and a hook at the other end. The legs are fastened to the eye of the pendant with a choker hitch. The entire assembly with one or more legs is rated at 4,000 pounds.

**CAUTION**

**Components of different load capacity or type sling assemblies are not interchangeable. Mixing of components of different capacity or type slings can result in unpredictable lifting characteristics or failure of the sling assembly.**

## 9-6. LOAD PREPARATION

The primary concern in load preparation is to provide a load that will ride safely in flight and arrive at the destination undamaged. VERTREP loads are subject to extremely high winds from rotor wash during hover and flight. Detailed procedures in NAVSEA S9751-AA-MMA-010, used for preparing ordnance loads for VERTREP, can also be used to prepare other loads of similar configuration.

**a. Pallet Assembly.** In assembling loads to be moved on pallets, the following rules apply:

**(1)** Stack and strap small boxes and crates to the pallets to provide a stable and secure load. Loosely packed loads on pallets are a safety hazard and should not be transported by helicopter.

**(2)** Interlace load layers whenever possible.

**(3)** Band pallet loads tightly and adequately. Add nylon strapping to prevent the load from shifting when the pallet is moved by forklift truck or while it is in flight.

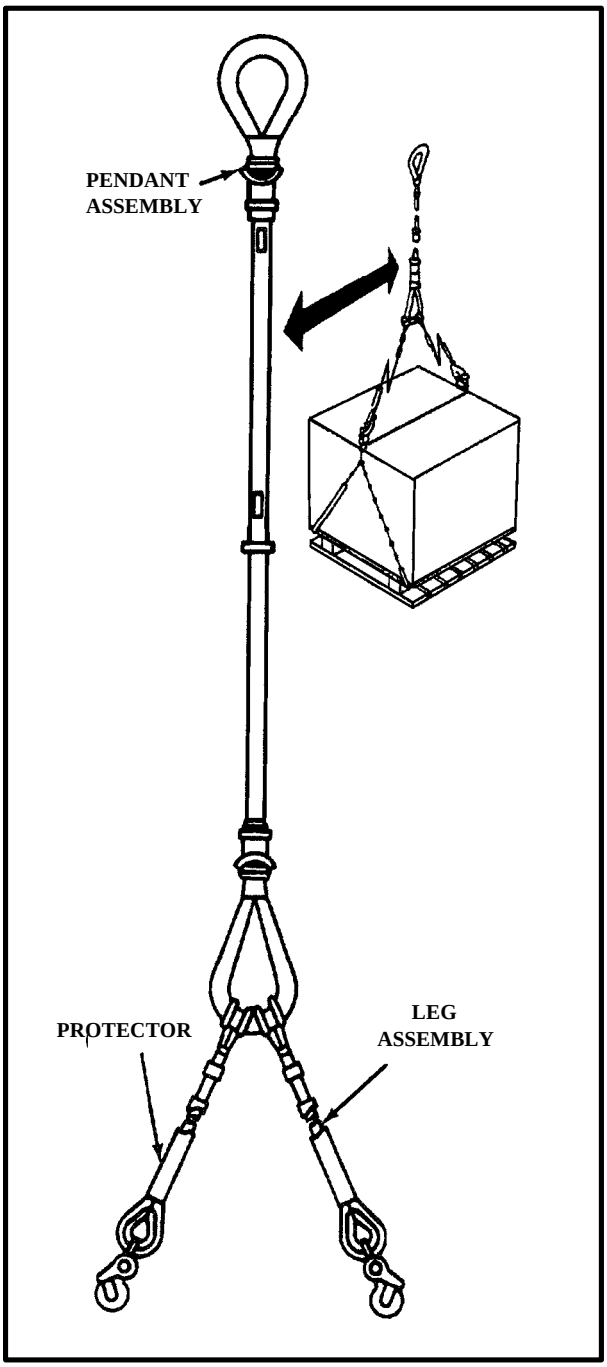


*Figure 9-6. Hoisting Sling Mk 128 Mod O*

**(4)** Check for load integrity of any cargo that was palletized at the Naval ammunition depot or supply center. Reband as necessary.

**b. Cargotainer Loading.** When preparing cargotainer loads, remember the following:

**(1)** Raise and lock the sides of the cargotainer.

**(2)** Avoid lightweight (less than 100 pounds) loads because of their instability during flight. It is possible that a lightweight load may be blown against the bottom of the helicopter.

**c. Cargo Net Loading (Loose Cargo).** Use nets for transferring general cargo. Observe the following rules when loading cargo nets:

**(1)** Avoid lightweight (less than 100 pounds) loads because of their instability during flight.

**(2)** Do not load small cartons on the bottom of the net where they could be forced out through the openings in the net.

**(3)** Cover or secure lightweight or small items together to keep them from blowing out of the net. Once they are packed together, place them on top of the larger loads.

**NOTE: One method of safeguarding small items against loss in flight is to secure the corners of the net together by taking opposing corner rings and weaving them through at least two web straps in the webbing below the opposite rings. Figure 9-7 illustrates the steps to be used. Fasten the sling leg through all four corner rings. When the helicopter lifts the net, the weight of the load will cinch the net and prevent the items from being lost through the net.**

**d. Palletized Cargo.** The following procedure is the preferred method for loading palletized cargo in a net:

**(1)** Band or strap cargo securely to the pallet.

**(2)** Lay the cargo net out on the deck and place the loaded pallet in the center.

**(3)** Draw the net up around the load and lay the corners of the net loosely on top of the load.

**(4)** Secure the net (corners) rings with a becket.

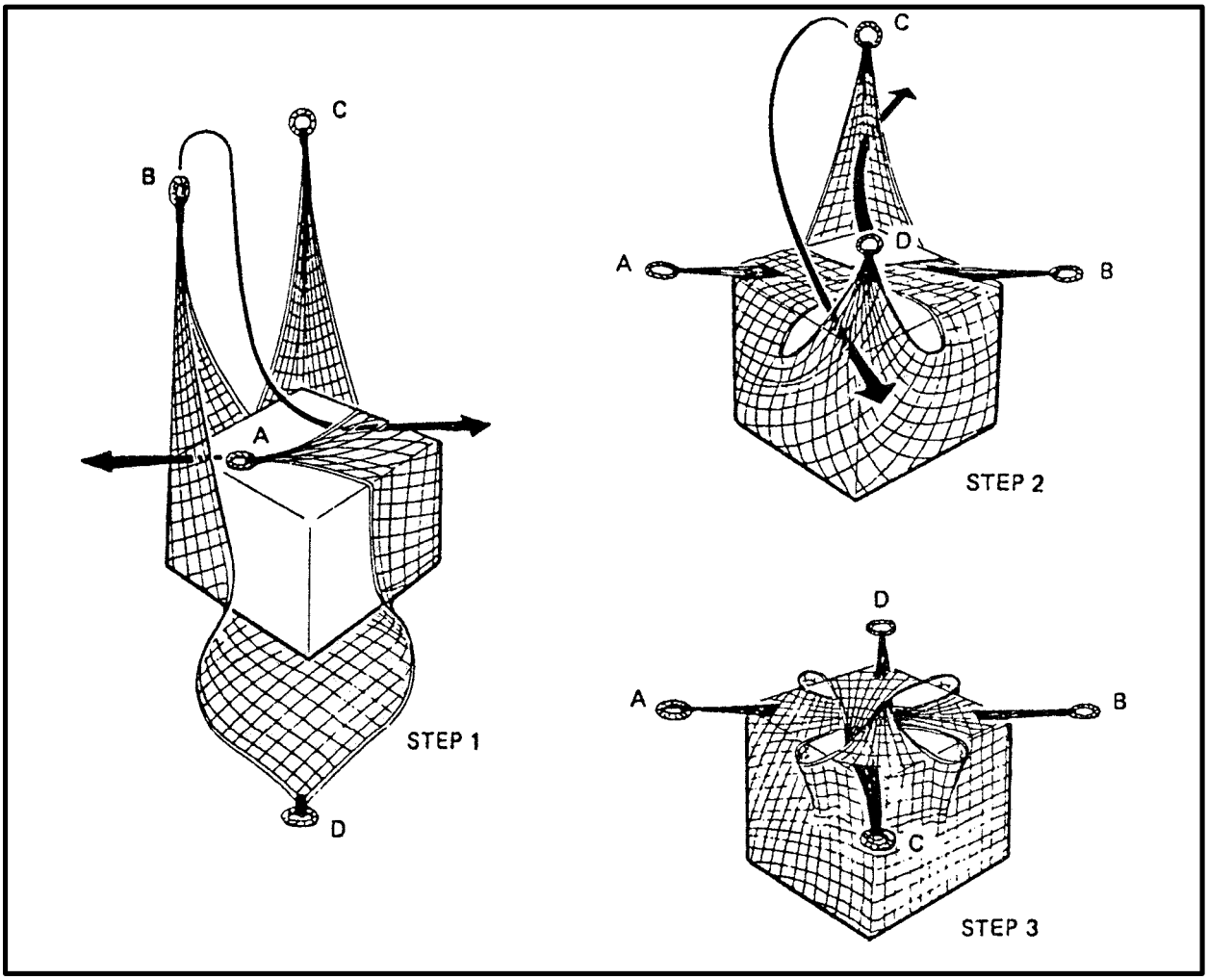


*Figure 9-7. Securing Cargo Net with Loose Cargo*

**(5)** To move the pallet by forklift, carefully insert the forklift tines through the net webbing straps and into the pallet.

**WARNING**

**Do not place a palletized load that is rigged within a net on an empty pallet to move by forklift. When the helicopter lifts the load, the empty pallet may become a loose object because of rotor wash. The pallet within the net is adequate for moving the load by forklift.**

## 9-7. WEIGHT AND IDENTIFICATION OF LOADS

As each load is prepared, mark it with its weight and other required information for the helicopter crew and receiving unit. Use chalk, a felt-tipped pen, or color-coded tags for identification. Load marking facilitates load-pairing and combining light loads to provide the most efficient weight for a helicopter. Combine loads to achieve the best distribution of weight for each lift. As many as four pallets may be carried per lift. The average weight of a single or combined load (using an H-46 helicopter) is 3,000 pounds. Heavier loads may be carried under ideal weather and atmospheric conditions, depending on the helicopter's fuel load and pilot approval.

**CAUTION**

**Paired loads should be approximately the same configuration to reduce the possibility of tipping over on pickup or delivery.**

## 9-8. ATTACHING SLINGS TO LOADS

**a. Adjustable Pallet Slings.** Palletized ordnance may be transferred without cargo nets using the adjustable pallet sling (Figure 9-8). In order to attach the sling to the load, follow these steps:

**(1)** Select the proper (color-coded) sling length according to the height of the load. (Refer to Table 9-1.)

**(2)** Pass each loop of the sling under the overhang made by the upper boards on the sides of the pallet.

**(3)** Pull the ends of the sling cable containing the swage stops through the sling tensioners (Figure 9-9) until the bridle is tight across the top of the load and slack is out of the cable.

**(4)** Adjust the sling so that the lifting thimbles are centered and at an equal height from the pallet.

**(5)** Place each tensioner over the nearest swage stop, lower the latch to the stirrup, and lock the tensioner.

**CAUTION**

**The last swage stop in each sling leg is a safety bead and will not be used.**

**b. Safety Hook Operation.** The safety hook is the only moving part of the hoisting sling assembly legs (Figure 9-10). You must be able to operate the safety

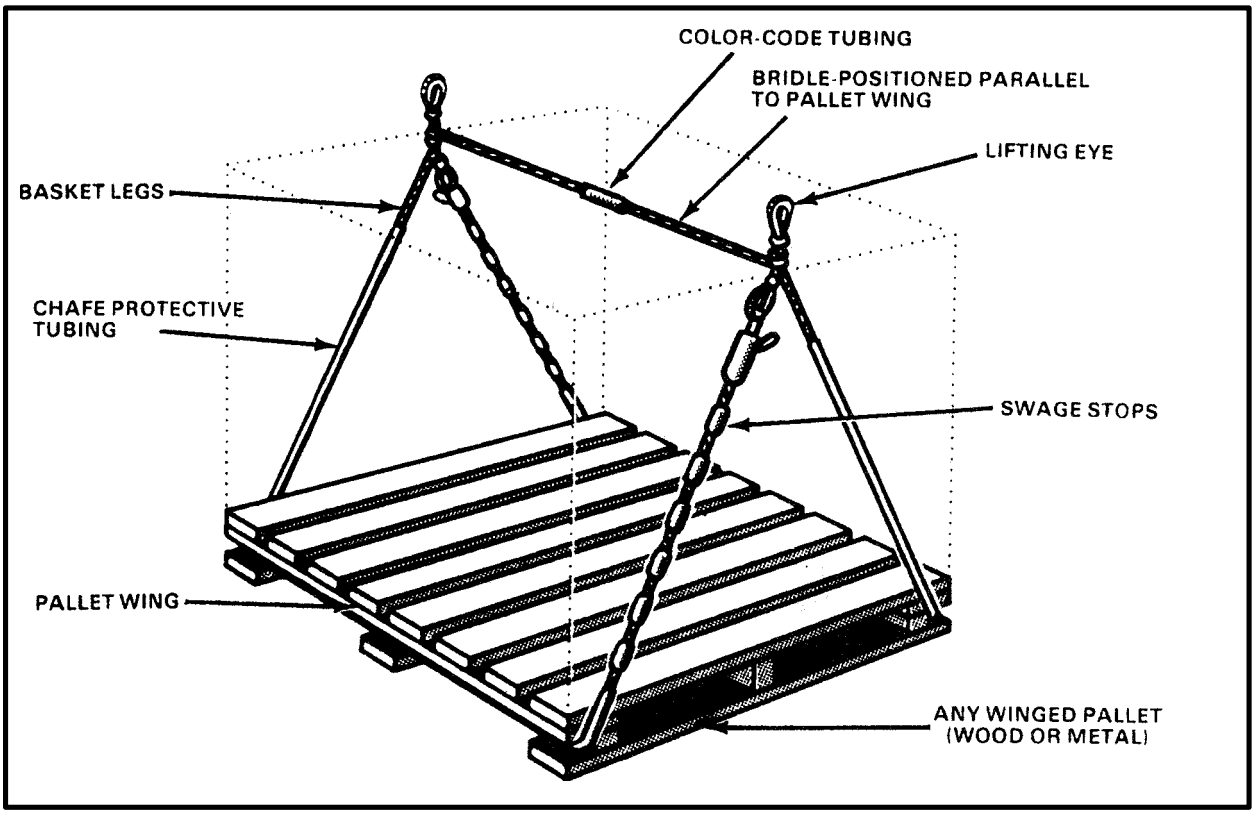


*Figure 9-8. Adjustable Pallet Sling Mk85, 86, 87, and 100*

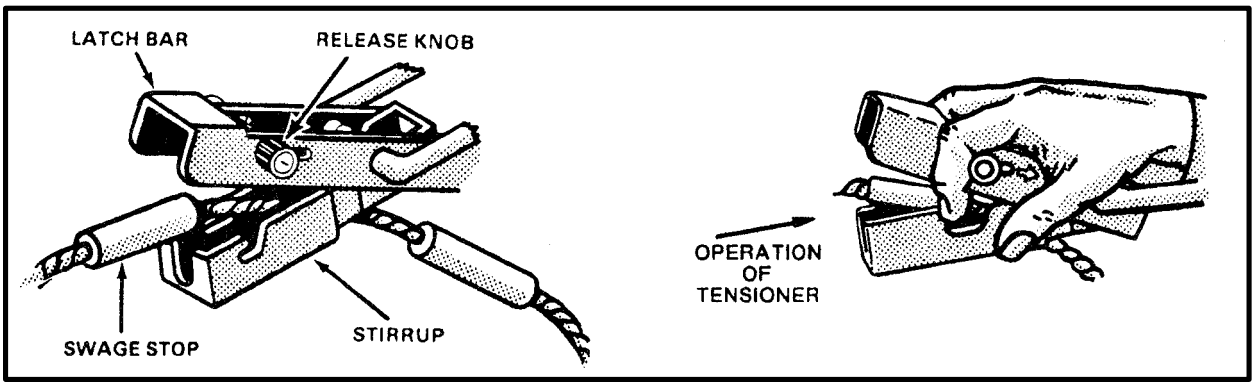


*Figure 9-9. Tensioner and Its Operation*

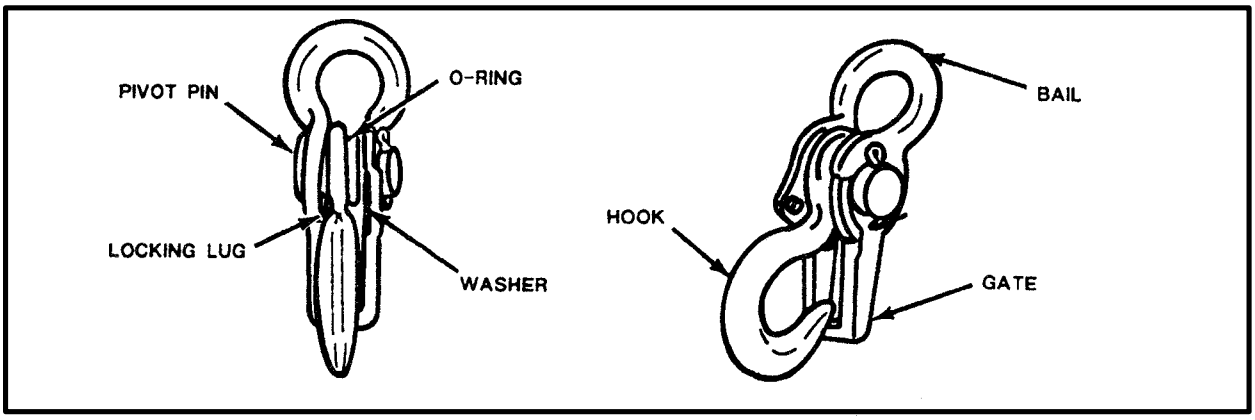


*Figure 9-10. Safety Hook*

hook before you can attach the hoisting sling to a load. Instructions for hook operation (Figure 9-11) are as follows:

**CAUTION**

**Do not insert the safety hook through all four of the cargo net's oval metal rings and do not hook backward towards the bight of the lifting sling or sling leg. To do so would damage the lifting sling, sling leg, thimble, or hook latching assembly.**

**(1)** To open the hook, grasp the hook in one hand and the yoke in the other hand so that your forefinger passes under the yoke. Hold the hook while twisting the yoke to the right and lifting it at the same time.

**(2)** To close the hook, press the yoke down over the hook.

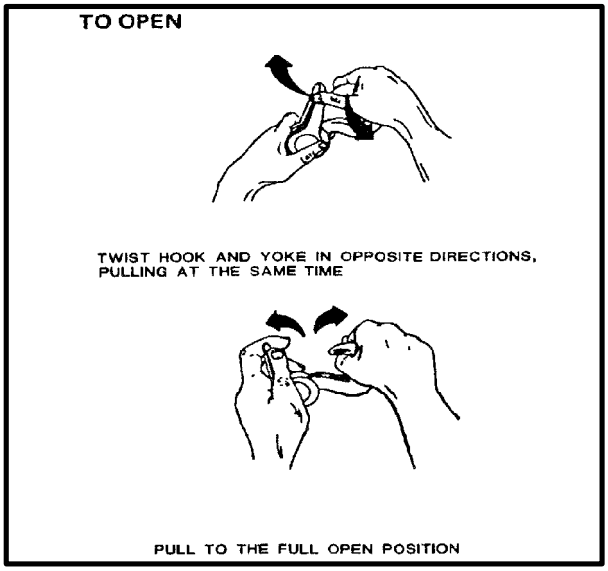


*Figure 9-11. Operation of Safety Hook*

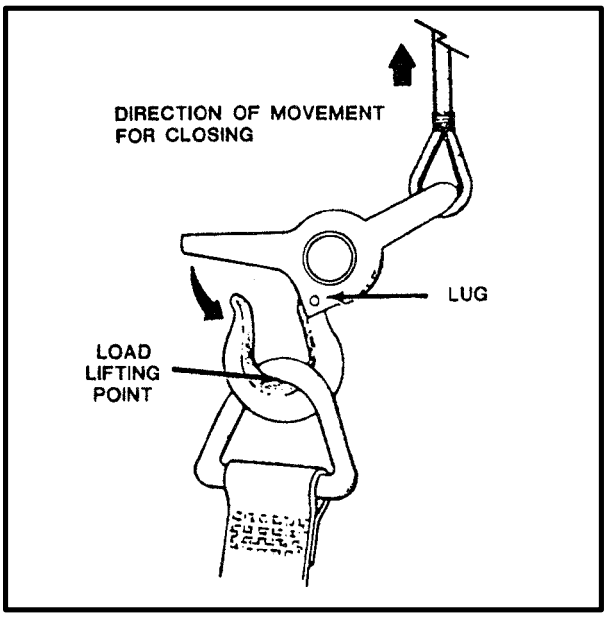


*Figure 9-11. Operation of Safety Hook (Continued)*

**c. Hoisting Slings.**

**(1)** For loads with a single lifting point, such as a cargo net, use an Mk105 hoisting sling with one single sling leg. Connect the sling leg safety hook to the load's apex fitting or lifting provisions.

**CAUTION**
**The single leg on the Mk105 hoisting sling reduces the safe working load of the sling from 6,000 pounds to 3,000 pounds.**

**(2)** For loads with two attachment points, such as a pallet rigged with a pallet sling, attach two legs to the lower eye of the Mk105 hoisting sling by means of a choker hitch; then connect the safety hooks on the legs to the lifting thimbles on the pallet sling—one leg to one thimble. An alternate hoisting sling for a load with two attachment points is the Mkl28 Mod 0. Attach it in the same manner as the Mk105 sling. After the hooks are attached, secure the legs with the hook-and-pile fastener strap to ensure that the strap legs do not work loose under the load and tip over during pickup.

**(3)** When using the Mk105 hoisting sling to lift loads with two attachment points, ensure that both lifting legs are the same length (identified by color).

**(4)** For loads with four attachment points, such as a cargotainer, use the Mk105 hoisting sling with four legs. When pairing loads (from two to six lifting points), use the Mk105 hoisting sling with a leg for each lifting point (Figure 9-12).

**CAUTION**
**Remove any legs on the Mk105 that are not attached to a lifting point on the load.**

**d. Special Procedures for Nonstandard Loads.** Refer to NAVSEA S9750-AA-MMA-010 for attaching adapters to containers and rigging missile dollies for VERTREP. Large, bulky, or odd-shaped loads that cannot be carried on a pallet or in nets will be provided with slings or lifting eyes for attaching pendant/sling. The pilot will always be consulted about the feasibility of moving nonstandard loads.

**CAUTION**
**When rigging a special load, carefully inspect the load attachment points to ensure that they are the correct/designated points. What appears to be a lifting eye or lifting point may be a provision for other purposes (for example, a tie-down point) and may not be intended for helicopter external lifting.**

## 9-9. CARGO STAGING

Prior to actual flight operations, the maximum possible amount of cargo is staged on the flight deck. Primary considerations in preparing and executing the flight deck cargo staging plan follow:

•All cargo must be staged within the hover area bounded by marked lines and/or hover limit line(s) and be accessible for pickup by the helicopter.

•When possible, allow sufficient room between loads for the hookup man to move about freely and have an emergency escape route.

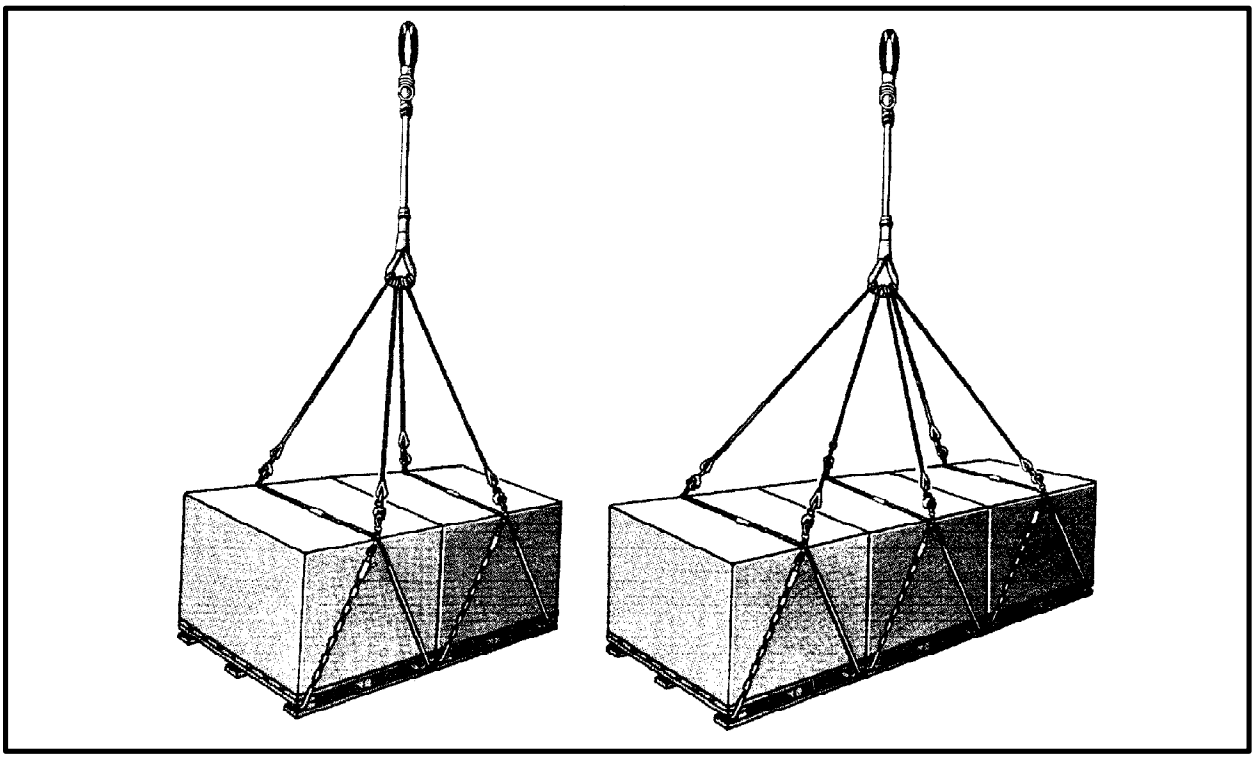

*Figure 9-12. Hoisting Sling Mk105 with Two and Three Pallet Loads*

•Allow sufficient room between loads to reduce the possibility of a load snagging or overturning adjacent loads during pickup.

•Tarpaulins used to cover staged VERTREP loads during flight operations must be secured with cargo nets. This ensures that the tarpaulins will not be blown off the load and into the helicopter rotors.

•When possible, load height will be constructed so that the hookup man can conduct his tasks without climbing on the loads.

## 9-10. STATIC ELECTRICITY DISCHARGE WAND

Use the static electricity discharge wand regardless of the type of sling or aircraft (USN does not use the wand except with CH-53 helicopters). Static electricity buildup in the helicopter hook must be grounded before hookup with the sling. Static discharge wand contact with the aircraft's hook must be maintained continuously until hookup is complete. Static electricity is dangerous and can cause serious injury or death.

## 9-11. LOAD TRANSFER PROCEDURES

Before starting operations, pilots must be provided with the destination and exact weight of each load. One method for displaying the weight of a load is to write the load weight with chalk on the side of the upper eye [illegible]

**a.** The Coast Guard LSO must be stationed forward of the VERTREP line. During VERTREP operations with a Coast Guard cutter, hovering on headings from 045 to 090 degrees relative will only be attempted with a pilot in the left seat at the controls. As the helicopter approaches, its approach is announced over the ship's public address system. All personnel must clear the landing

and pickup zone, except for the hookup men. Hookup men take their position alongside the LSO on a Coast Guard cutter or beside the load in a Navy operation to hold the pendant up to signal the location of the load to the pilot. The helicopter crew chief, viewing the pickup zone through the open cargo hook access hatch or aircraft door, advises the pilot via the helicopter's internal communications system as to the final maneuvering needed to place the helicopter exactly over the load. The Coast Guard crewman signals the hookup team to approach the load and prepare for hookup. As the helicopter hovers over the load, the hookup man grounds the helicopter hook. He then raises the pendant, slips the eye over the helicopter's hook, and returns to his position beside the LSO/LSE.

**b.** When conditions prevent the hookup man from placing the pendant/sling on the aircraft cargo hook, the hookup man passes the pendant/sling to the crew chief and then clears the area, moving toward the LSE. The crew chief then places the pendant over the helicopter hook and ensures that the load is secure and ready for lifting.

**WARNING**
**Hookup personnel must never stand on the load or between the load being picked up and another load unless operational requirements dictate.**

**c.** The aircrew member aboard the helicopter directs load placement while the helicopter hovers over the pickup or drop area. The LSO/LSE continues giving hand-and-arm signals as a backup to internal communication and to indicate any emergencies to the pilot or aircrew. Radio transmissions to the pilot hovering over the VERTREP zone are distracting and should be of an urgent nature only.

**WARNING**
**Personnel must not enter the flight deck landing zone or attempt to steady the load while the load is suspended above the deck.**

**d.** After the sling load is hooked up and the hookup team is clear, the crew member aboard the helicopter then gives pickup and lift-off directions to the pilot in order to clear the load from the pickup area.

## 9-12. LOAD DELIVERY

During the final approach to the ship, the pilot is guided by the LSO/LSE and the helicopter crew member. Once over the VERTREP area, the pilot follows the LSO/LSE and his crew member's directions to position the load over the cargo landing point. He relies on the crew member's directions for precision spotting and lowering the load. As soon as the load is on deck, the crew member informs the pilot. When the pendant slackens, the LSO/LSE signals the pilot. The pilot or crew member releases the cargo hook. The crew member informs the pilot when the load is released.

**CAUTION**
**Do not release the load before there is slack in the sling legs. Premature release can cause the pole pendant to damage the load or cause personnel injury.**

**WARNING**
**Personnel clearing stores must remove all banding strips, paper, and other debris from the VERTREP area before the next helicopter approaches to prevent injury to personnel and damage to helicopter engines and rotor blades.**

## 9-13. CLEARING THE VERTREP AREA

**a. Unloading the Cargo.** Once the load is released and the helicopter has departed, cargo handlers will prepare the load for distribution to the users or relocate it clear of the landing area.

**(1)** Nets, beckets, and cargo wraparound straps shall never be cut. Assigned men open the net and cut any banding or strapping on the load. Cargo handlers who have been standing by clear of the VERTREP area, move in, pick up a portion of the cargo, and leave the VERTREP area. The last ones remove the net and loose debris from the VERTREP area, and place them in a staging area. The nets are folded for later return to the helicopter.

**(2)** Do not wave off a loaded helicopter with a sling load solely because the VERTREP area is not completely clear of the previous load. If space is available for additional cargo, the load being worked should be temporarily secured by pulling the net up over the load and threading the hoisting sling leg through the net ends. All personnel must then clear the area while the next load is being deposited. Speed is second only to safety in clearing the VERTREP area.

**b. Retrograde Operations.** As pallets, nets, cargotainers, and hoisting slings accumulate on the flight deck, cargo handlers should assemble and prepare the VERTREP equipment for return. Retrograde operations must start at the request of the delivery ship.

**(1) Pallets.** Prepare pallets for return in the following manner:

**(a)** Stack pallets to assemble a load between 16 and 68 inches high. Four to 14 wooden pallets or six or more metal pallets may be stacked to make up the load.

**(b)** Rig the pallets with the appropriate size pallet sling. Secure pallets to prevent loss during flight.

**(c)** Attach a hoisting sling (two attachment points) to the pallets.

**CAUTION**
**When preparing tubular steel pallets for return, use a minimum of six pallets per stack to ensure flight stability.**

**NOTE: Three loads of pallets may be returned in the same lift if there is sufficient clearance to lift the load clear of the flight deck. In this case, attach the hoisting sling (six sling legs) after the loads are spotted on the flight deck (Figure 9-12).**

**(2) Nets and Pallets.** If you are moving nets and pallets together, follow these procedures:

**(a)** Stack four or more wooden pallets or six or more metal pallets in the center of the net.

**(b)** Fold the unused nets to the same width and length as the pallets and place them on top of the pallets.

**(c)** Pull the bottom net corners up around the entire load and secure the rings.

**(d)** Attach a hoisting sling (one attachment point).

**(3) Cargotainers.** Return cargotainers by folding and placing them inside one cargotainer. Place extra straps and slings inside the cargotainer. Connect one sling (four attachment points) to the load. An alternate method is to place folded cargotainers in a net.

**WARNING**
**Do not, under any circumstances, hook an empty net to the helicopter without at least four wooden or six metal pallets or equivalent weight in the net. To do so could cause damage to the helicopter by allowing the net to be blown into the helicopter's rotors. If in doubt, consult the pilot.**

**(4) Slings and Pendants.** Slings and pendants must be returned to the delivering unit/platform so that they can be used for future VERTREP missions. Thread one leg of a sling through the lifting eyes of the pendants/slings that will be moved. A minimum of 10 pendants/slings with legs attached is recommended in order to maintain stability in flight. Attach a safety hook around the sling legs to keep them together during flight. Proceed with hookup.

## 9-14. SAFETY

Safety is the primary consideration in all VERTREP operations. The following precautions must be taken:

**a.** All personnel except the LSO/LSE, static wand person, and hookup man (when required) must clear the landing area during delivery, pickup, takeoff, and landing. Do not attempt to steady the load.

**b.** Cargo handling personnel must wear life jackets, helmets with chin strap, goggles, safety shoes, and ear protection. Loose articles of clothing will not be worn. Remove covers, rags, and other loose articles from pockets.

**c.** All personnel in the vicinity of the helicopter must remove their covers when the rotors are turning.

**d.** All personnel at the landing area must be trained to clear the area around the helicopter immediately on command of the officer in charge.

**e.** Personnel working near the helicopter must observe the aircraft carefully for any sign of a malfunction such as smoke, oil, or a hydraulic leak, and immediately report any such conditions to the pilot or VERTREP officer.

**f.** The flight deck must be cleared of all objects which can be blown about by rotor wash or ingested into the helicopter engines.

## 9-15. NIGHT VERTREP

Night VERTREP operations take longer than day VERTREP operations because of reduced visibility. Night VERTREP is carried out in the same manner as day VERTREP, subject to the limitations set forth in this chapter. The final decision regarding whether a particular ship can be vertically replenished at night is left to the pilot. Factors affecting night VERTREP are as follows:

**a. Helicopter Limitations.** The helicopter must be capable of instrument flight.

**b. Weather/Sea State.** Adverse weather conditions further reduce night VERTREP capabilities.

**c. Ship Lighting.** Ships certified for night helicopter operations are properly lighted. As a minimum, ships shall use lights as follows:

**(1)** Obstructions in the vicinity of the VERTREP area should be illuminated.

**(2)** Red flood lights should be focused on the flight deck at a point forward of the cargo VERTREP area.

## 9-16. NIGHT VERTREP PROCEDURES

Essentially the same procedures are used for night VERTREP as during the day. However, night cargo pickup and delivery require increased care and precision. A wider flight pattern is necessary under low visibility conditions. Delivery rates, therefore, are lower than during daylight hours.

**a. Coordination.** The commanding officer is responsible for employing a course that will keep the ship's stack gases away from the helicopter in the VERTREP area, as night vision may be affected.

**b. Communications.** The following communications procedures must be performed in night VERTREP:

**(1)** The LSO must use green or white/yellow tinted wands for helicopter direction signals.

**(2)** The LSO must use the landing signal light kit (battery powered).

**(3)** Information concerning identification such as, bearing, distance, and load weight must be transmitted by radio. USN uses other methods during emergency communications (EMCOM) such as placards, notes, or messengers relaying information to the pilot.

# APPENDIX A

## HAND-AND-ARM SIGNALS

**EXTRACT OF STANAG 3117**

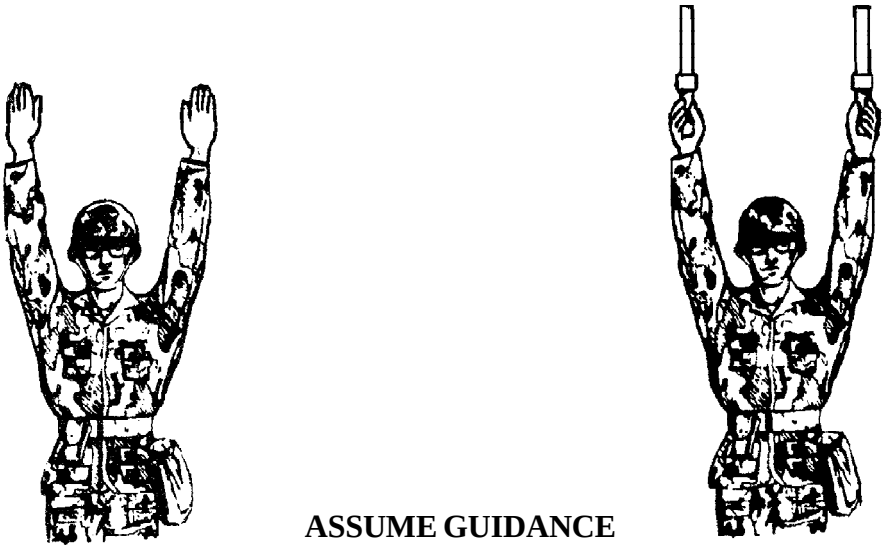

**ASSUME GUIDANCE**

**ARMS EXTENDED VERTICALLY STRAIGHT UP, PALMS FORWARD**

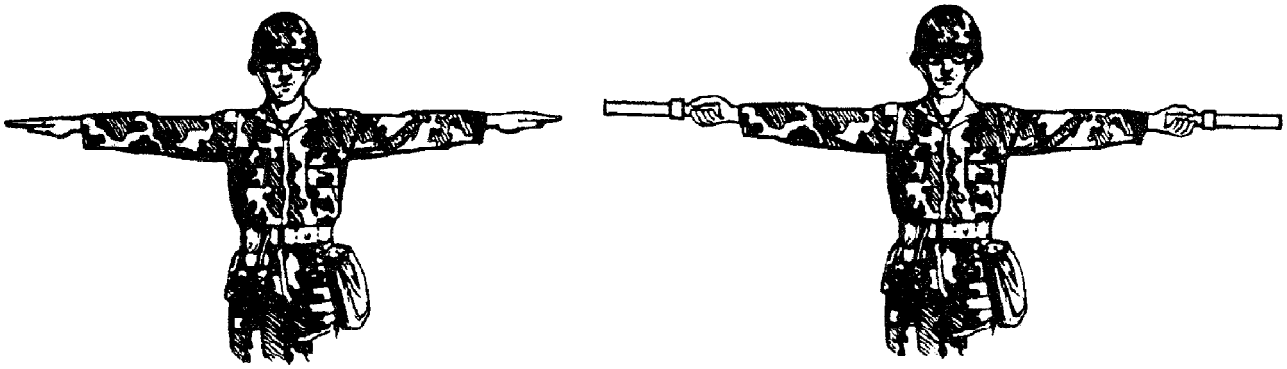

**HOVER**

**ARMS EXTENDED HORIZONTALLY SIDEWAYS, PALMS DOWNWARD**

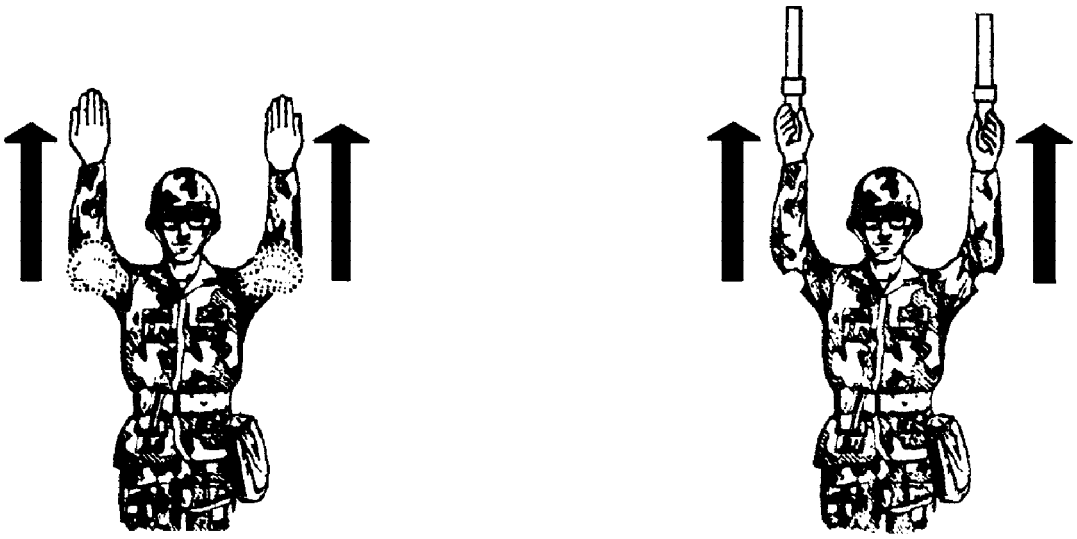

**MOVE FORWARD**

**ARMS A LITTLE ASIDE, PALMS FACING BACKWARDS AND
REPEATEDLY MOVE UPWARD-BACKWARD FROM SHOULDER HEIGHT**

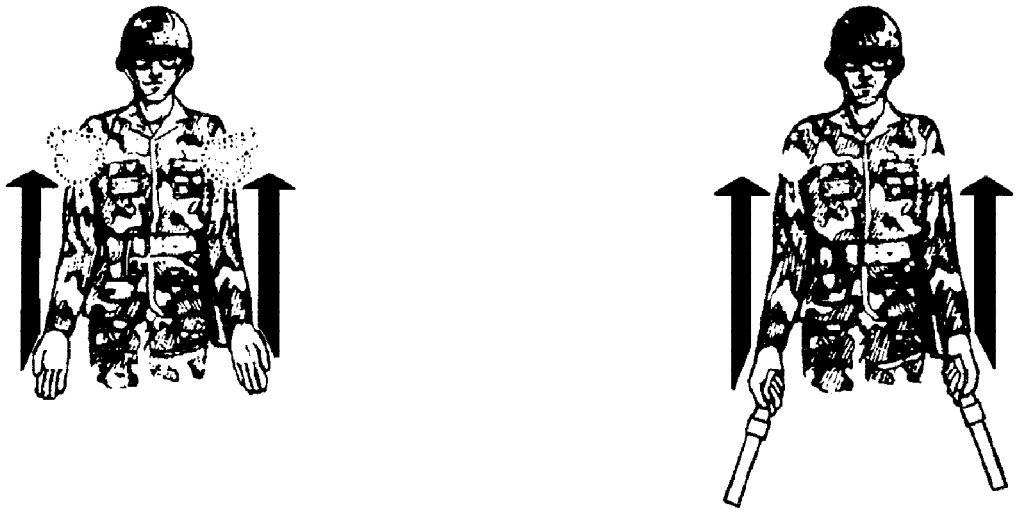

**MOVE BACKWARD**

**ARMS BY SIDE, PALMS FACING FORWARD, ARMS SWEPT
FORWARD AND UPWARD REPEATEDLY TO SHOULDER HEIGHT**

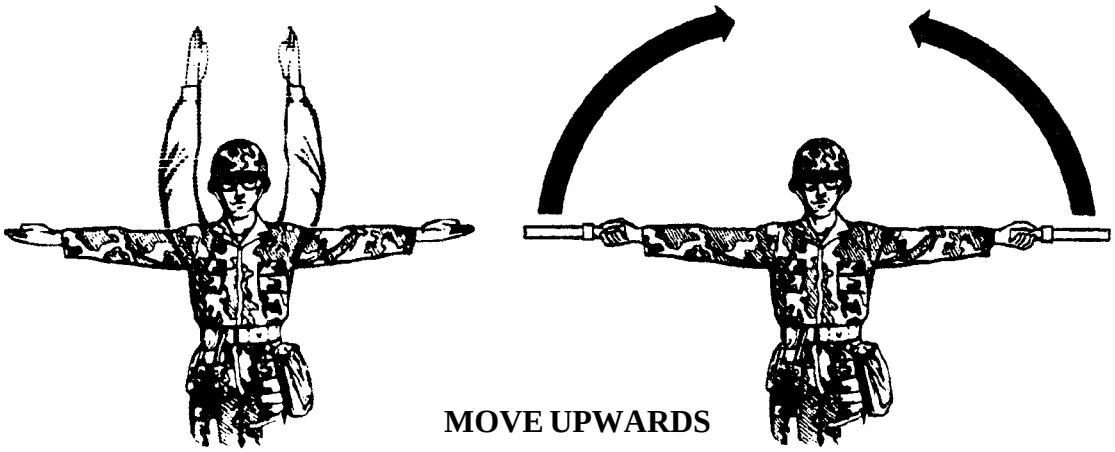

**MOVE UPWARDS**

**ARMS EXTENDED HORIZONTALLY SIDEWAYS, BECKONING UPWARDS, WITH PALMS UP**

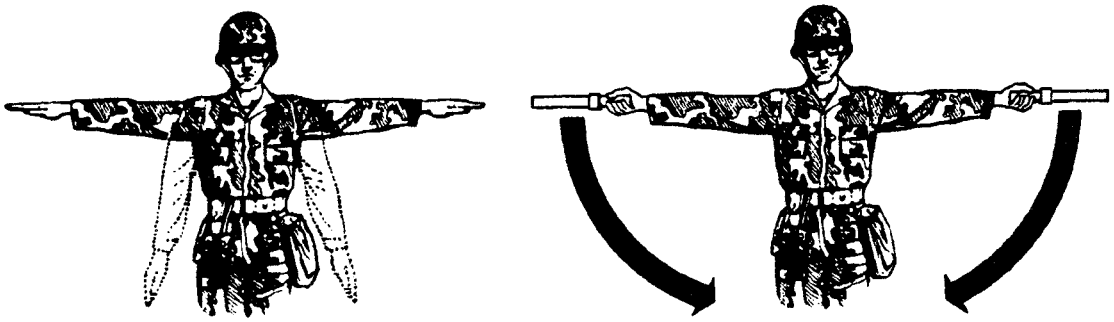

**MOVE DOWNWARDS**

**ARMS EXTENDED HORIZONTALLY SIDEWAYS, BECKONING DOWNWARDS, WITH PALMS TURNED DOWN**

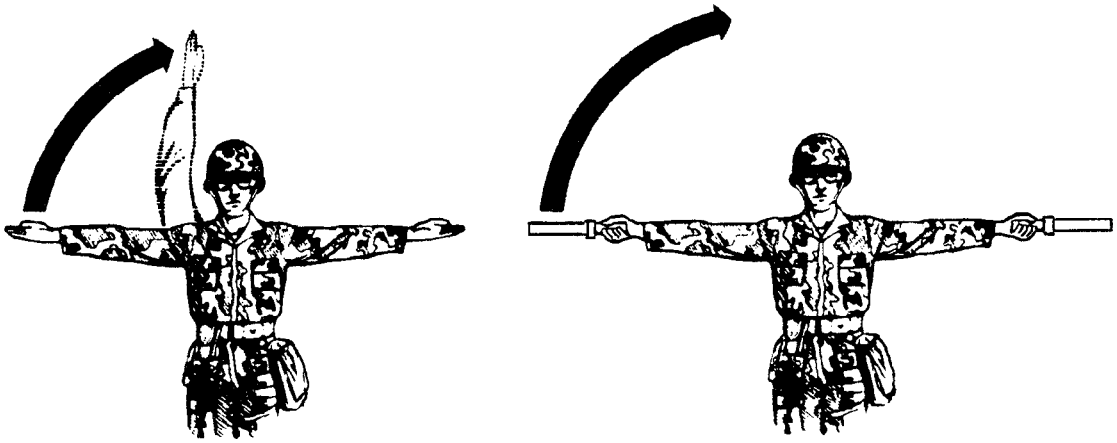

**MOVE TO RIGHT**

**LEFT ARM EXTENDED HORIZONTALLY SIDEWAYS IN DIRECTION OF MOVEMENT AND OTHER ARM SWUNG OVERHEAD IN SAME DIRECTION, IN A REPEATING MOVEMENT**

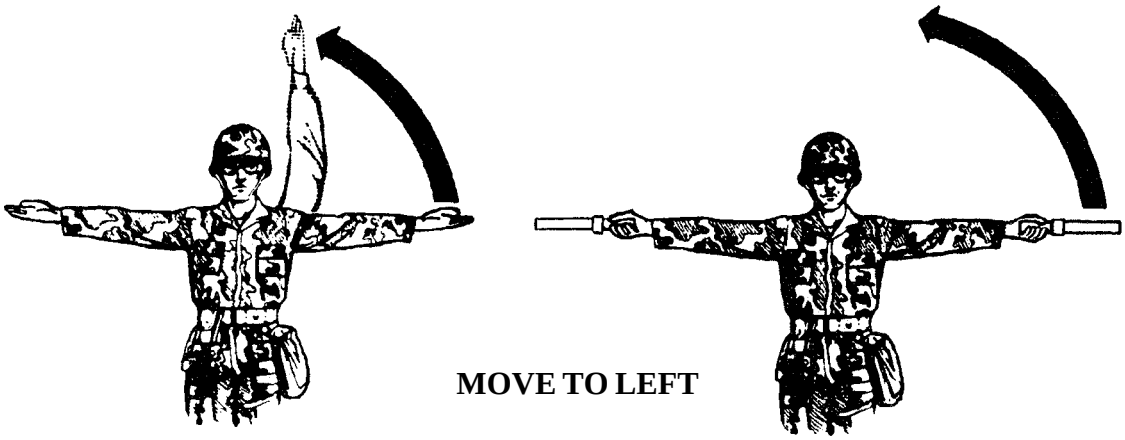

**MOVE TO LEFT**

**RIGHT ARM EXTENDED HORIZONTALLY SIDEWAYS IN DIRECTION OF MOVEMENT AND OTHER ARM SWUNG OVERHEAD IN SAME DIRECTION IN A REPEATING MOVEMENT**

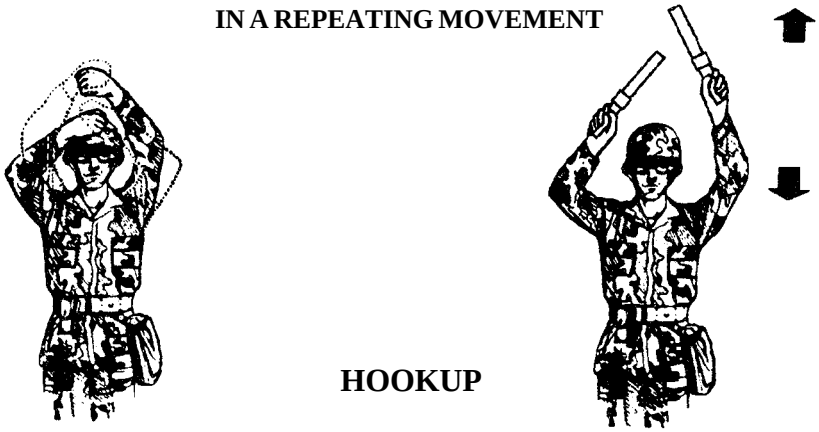

**HOOKUP**

**RAISE HANDS ALTERNATELY ABOVE THE HEAD IN A "ROPE CLIMBING " MOTION TO TAKE UP SLACK**

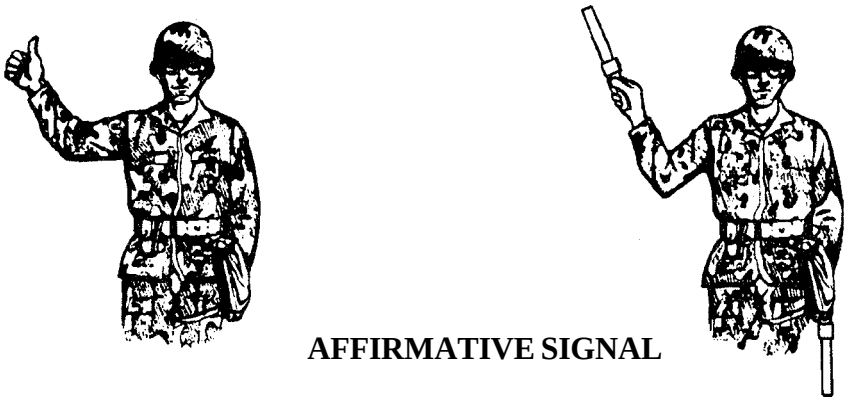

**AFFIRMATIVE SIGNAL**

**HAND RAISED, THUMB UP**

**NEGATIVE SIGNAL**

**HAND RAISED, THUMB DOWN**

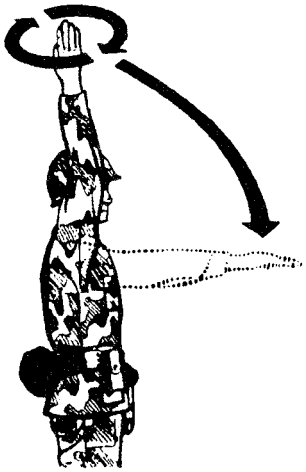

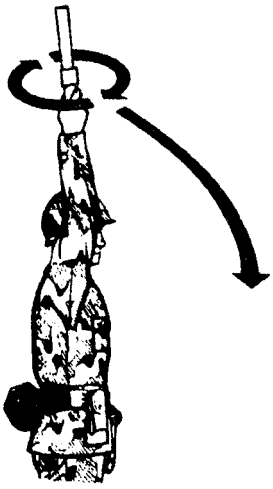

**TAKEOFF**

**MAKE A CIRCULAR MOTION WITH RIGHT HAND OVERHEAD ENDING IN A THROWING MOTION IN THE DIRECTION OF TAKEOFF ALSO MEANS LOAD CLEAR, HOOKUP GOOD**

**LAND**

**ARMS CROSSED AND EXTENDED DOWNWARDS IN FRONT OF THE BODY**

**STOP**

**HOLD ARMS CROSSED OVERHEAD, DO NOT MOVE**

**WAVE OFF - DO NOT LAND**

**CROSS ARMS REPEATEDLY OVERHEAD**

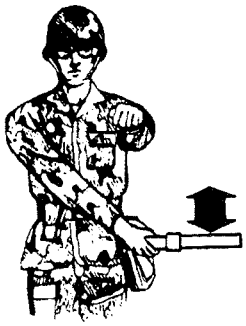

**RELEASE SLING LOAD**

**LEFT ARM EXTENDED FORWARD HORIZONTALLY, FIST CLENCHED, RIGHT HAND MAKING HORIZONTAL SLICING MOVEMENT BELOW THE LEFT FIST, PALM DOWNWARD**

## ASSUME GUIDANCE

## MOVE YOUR AIRCRAFT

LEFT

RIGHT

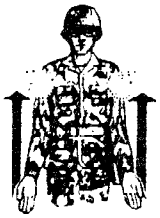

BACK

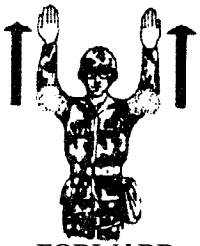

FORWARD

HOVER

HOOKUP
(YOUR LOAD IS ATTACHED)

MOVE UPWARD

AFFIRMATIVE SIGNAL

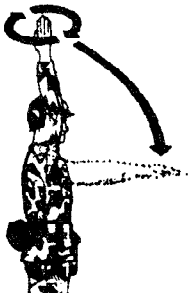

TAKE OFF

**AN EXAMPLE SERIES OF HAND SIGNALS
FOR A PICKUP ZONE DURING A ONE AIRCRAFT OPERATION**

**If a problen occurs on a load when the aircraft raises up and the slings tighten, follow these directions**

**HOOKUP**
**(followed quickly by a negative signal)**

**MOVE DOWNWARD**

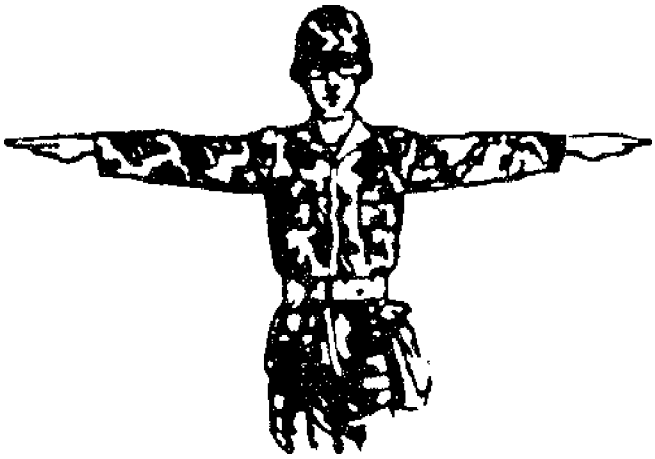

**HOVER**
**(while the ground crew corrects the load)**

**RELEASE SLING LOAD**
**(if necessary)**

**ONCE THE LOAD IS CORRECTED GO BACK TO NORMAL HOOKUP PROCEDURES**

**IF THE PROBLEM CANNOT BE CORRECTED BY THIS METHOD, GIVE THE PILOT THE RELEASE THE LOAD SIGNAL**

# APPENDIX B

## NATIONAL STOCK NUMBERS FOR SLINGS, NETS, AND SPARE PARTS

## 10,000-POUND CAPACITY SLING SET AND COMPONENTS

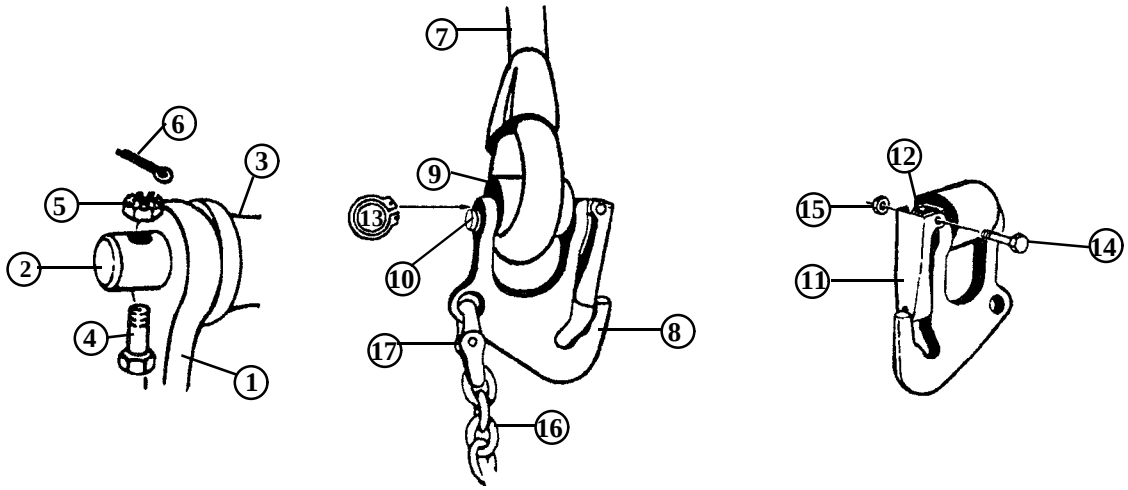


**10,000- or 25,000-Pound Capacity Sling Set (Circled Numbers Correspond with NSNs of Identified Part)**

| | NSN | Part Number | Description | Qty |
|---|---|---|---|---|
| | 1670-01-027-2902 | 38850-00001-043 | Sling set assembly complete LIN T79003 | 1 ea |
| 1 | 4030-01-048-4045 | 38850-00004-045 | Apex fitting assembly | 1 ea |
| 2 | 5315-01-115-3482 | 38850-00008-101 | Pin, apex fitting | 1 ea |
| 3 | 1670-01-235-0908 | 38850-00015-104 | Spacer,apex | 1 ea |
| 4 | 5306-00-944-1536 | NAS1306-16D | Bolt | 1 ea |
| 5 | 5310-00-207-9274 | AN 32OC6 | Nut, castellated | 1 ea |
| 6 | 5315-00-234-1864 | MS 24665-302 | Cotter pin | 1 ea |
| 7 | 1670-01-047-6814 | 38850-00009-055 | Rope assembly | 4 ea |
| 8 | 4030-01-048-4046 | 38850-00011-041 | Grabhook assembly | 4 ea |
| 9 | 1670-01-109-2543 | 38850-00015-101 | Spacer, grabhook | 4 ea |
| 10 | 5315-01-121-0497 | 38850-00008-103 | Pin,spacer | 4 ea |
| 11 | 4030-01-100-1684 | 38850-00017-101 | Keeper, grabhook | 4 ea |
| 12 | 5360-01-115-6833 | 38850-00019-101 | Keeper spring | 4 ea |
| 13 | 5365-01-046-3670 | MS 3217-1050 | Snap ring | 4 ea |
| 14 | 5306-00-771-7621 | NAS 1303-21 | Bolt, shear | 4 ea |
| 15 | 5310-01-024-7080 | MS 51865-6C | Nut, lock | 4 ea |
| 16 | 4010-01-058-4772 | 38850-00053-101 | Chain, 8-foot length | 4 ea |
| 17 | 4010-01-193-9331 | 577-0615 | Coupling, link | 4 ea |
| | 8460-00-606-8366 | MIL-K-41835 | Kit bag, flyers | 1 ea |

## 25,000-POUND CAPACITY SLING SET AND COMPONENTS

| | NSN | Part Number | Description | Qty |
|---|---|---|---|---|
| | 1670-01-027-2900 | 38850-00001-044 | Sling set assembly complete LIN T79009 | 1 ea |
| 1 | 4030-01-048-4044 | 38850-00004-046 | Apex fitting assembly | 1 ea |
| 2 | 5315-01-119-9065 | 38850-00008-102 | Pin, apex fitting | 1 ea |
| 3 | 1670-01-235-0907 | 38850-00015-105 | Spacer,apex | 1 ea |
| 4 | 5306-00-944-2659 | NAS1306-22D | Bolt | 1 ea |
| 5 | 5310-00-207-9274 | AN 32OC6 | Nut, castellated | 1 ea |
| 6 | 5315-00-234-1864 | MS 24665-302 | Cotter pin | 1 ea |
| 7 | 1670-01-047-6815 | 38850-00009-056 | Rope assembly | 4 ea |
| 8 | 4030-01-048-4047 | 38850-00011-046 | Grabhook assembly | 4 ea |
| 9 | 1670-01-109-2544 | 38850-00015-102 | Spacer, grabhook | 4 ea |
| 10 | 5315-01-121-2874 | 38850-00008-104 | Pin,spacer | 4 ea |
| 11 | 4030-01-100-1685 | 38850-00017-102 | Keeper, grabhook | 4 ea |
| 12 | 5360-01-115-6833 | 38850-00019-101 | Keeper spring | 4 ea |
| 13 | 5365-00-261-3918 | MS 3217-1075 | Snap ring | 4 ea |
| 14 | 5306-00-771-7621 | NAS 1303-21 | Bolt, shear | 4 ea |
| 15 | 5310-01-024-7080 | MS 51865-6C | Nut, lock | 4 ea |
| 16 | 4010-01-058-4771 | 38850-00053-102 | Chain, 8-foot length | 4 ea |
| 17 | 4010-01-041-9751 | 664241 | Coupling, link | 4 ea |
| | 8460-00-606-8366 | MIL-K-41835 | Kit bag, flyers | 1 ea |

## 15,000-POUND CAPACITY MULTILEG SLING ASSEMBLY

| NSN | Part Number | Description | Qty |
|---|---|---|---|
| 1670-00-902-3080 | 3900061 | Sling, multi-leg assembly, LIN T780571<br>TAMCN B2030 | 1 ea |
| 1670-00-946-8719 | AC6000292 | Web Ring assembly | 1 ea |
| NA | MS24553-1 | Link assembly, web ring | 1 ea |
| 1670-00-946-8631 | 3110167 | Sling leg assembly | 4 ea |
| NA | 3910112-5 | Keeper, 5-inch, leg assembly | 4 ea |
| NA | 391011-1 | Keeper, 6 1/4-inch, leg assembly | 4 ea |
| NA | MS 24553-1 | Link assembly, sling leg | 1 ea |
| NA | 31610 | Grab link | 4 ea |
| NA | FE 7623-3 | Keeper, grab link | 4 ea |
| NA | 34012-18 | Spring keeper, grab link | 4 ea |
| 5310-00-167-0818 | AN960-10 | Washer keeper, grab link | 4 ea |
| 5315-00-812-3765 | MS20392-2033 | Pin, keeper, grab link | 4 ea |
| 5315-00-839-2325 | MS24665-132 | Cotter pin, keeper, grab link | 4 ea |
| NA | 31611 | Coupling link | 4 ea |
| NA | 34080-4 | Chain | 4 ea |

## 40,000-POUND CAPACITY SLING SET AND COMPONENTS

| NSN | Part Number | Description | Qty |
|---|---|---|---|
| 3940-01-183-2118 | TAMCN B 2035 | Sling set assembly, complete | 1 ea |
| 4838-01-199-9562 | FE8109-1 | Apex shackle assembly | 1 ea |
| NA | FE8109-5 | Shackle | 1 ea |
| NA | FE8109-3 | Pin, shackle, apex | 1 ea |
| NA | FE8109-2 | Spacer, shackle, apex | 1 ea |
| 5306-00-944-1538 | NAS1306-21D | Bolt | 1 ea |
| 5310-00-176-8110 | AN320-6 | Nut, castellated | 1 ea |
| 5315-00-234-1864 | MS24665-302 | Cotter Pin | 1 ea |
| 3940-01-194-9364 | JETSWMC-2000 | Sling leg | 4 ea |
| 4030-01-197-1629 | FE8103-1 | Grab link assembly | 4 ea |
| NA | FE8103-4 | Spacer, grab link | 4 ea |
| 5306-00-151-1482 | AN12-42 | Bolt, grab link | 4 ea |
| 5310-00-167-1292 | AN310-12 | Nut, grab link | 4 ea |
| 5315-00-285-7161 | MS24665-377 | Cotter pin, grab link | 4 ea |
| NA | FE7623-3 | Keeper, grablink | 4 ea |
| 5315-00-812-3765 | MS20392-2033 | Pin, keeper, grab link | 4 ea |
| NA | 34012-18 | Spring keeper, grab link | 4 ea |
| 5310-00-167-0818 | AN960-10 | Washer, keeper, grab link | 4 ea |
| 5315-00-839-2325 | MS24665-132 | Cotter pin keeper, grab link | 4 ea |
| 4010-01-081-5114 | 577-0815 | Coupling link | 4 EA |
| NA | 607050 | Chain, 8-foot | 4 ea |

## FLAT WEB NYLON SLINGS

### TYPE X NYLON AERIAL DELIVERY SLING

| NSN | Description |
|---|---|
| 3940-00-675-5001 | Sling, endless donut, 10-inch |
| 1670-00-393-0460 | Ring assembly, 25,000-pound capacity |

### TYPE XXVI NYLON MULTILOOP LINE

| NSN | Description |
|---|---|
| 1670-01-062-6301 | 2-loop, 3 foot |
| 1670-01-062-6306 | 4-loop, 3 foot |
| 1670-01-062-6304 | 2-loop, 9 foot |
| 1670-01-062-6305 | 4-loop, 9 foot |
| 1670-01-063-7760 | 2-loop, 11 foot |
| 1670-01-062-6310 | 4-loop, 11 foot |
| 1670-01-062-6303 | 2-loop, 12 foot |
| 1670-01-062-6307 | 4-loop, 12 foot |
| 1670-01-063-7761 | 2-loop, 16 foot |
| 1670-01-062-6308 | 4-loop, 16 foot |
| 1670-01-062-6302 | 2-loop, 20 foot |
| 1670-01-064-4453 | 4-loop, 20 foot |
| 1670-01-062-6309 | 4-loop, 28 foot |
| 1670-01-062-6313 | 3-loop, 60 foot |
| 1670-01-064-4454 | 6-loop, 60 foot |
| 1670-01-062-6311 | 2-loop, 120 foot |
| 1670-01-062-6312 | 6-loop, 120 foot |
| 1670-01-107-7651 | 3-loop, 140 foot |

## ROUNDSLINGS

| NSN | CAPACITY | LENGTH |
|---|---|---|
| 1670-01-388-6789 | 5,300-pound | 8 foot |
| 1670-01-388-8480 | 8,400-pound | 8 foot |
| 1670-01-388-3845 | 5,300-pound | 17 foot |
| 1670-01-388-8479 | 8,400-pound | 17 foot |
| 1670-01-388-3917 | 13,200-pound | 30 foot |
| 1670-01-388-3901 | 21,200-pound | 65 foot |
| 1670-01-388-3965 | 21,200-pound | 70 foot |

## 5,000- AND 10.000-POUND CAPACITY CARGO NETS AND COMPONENTS

| NSN | Part Number | Description | Qty |
|---|---|---|---|
| 1670-01-058-3811 | 6018-5 | Net, 5,000-pound capacity, LIN N02776, TAMCN J3121 | 1 ea |
| 1670-01-058-3810 | 6018-10 | Net, 10,000-pound capacity, LIN N02708, TAMCN J3120 | 1 ea |
| 1670-01-070-5276 | X6019 | Apex fitting | 1 ea |
| 1670-01-067-9989 | 6020 | Hook | 4 ea |
| 4020-01-118-5826 | 6018-15 | Repair cord, used on part no. 6018-5 | As req |
| 4020-01-119-5994 | 6018-20 | Repair cord, used on part no. 6018-10 | As req |
| 8030-01-152-2286 | 2300-3 | Antiabrasion compound, olive drab | As req |
| 8030-01-154-2327 | 1003 | Antiabrasion compound, black | As req |
| 1080-00-108-1155 | 13226EO964-2 | Transportease | 1 ea* |
| 8460-00-606-8366 | MIL-K-41835 | Kit bag, flyers | 1 ea* |

* Alternate NSN is 1080-00-107-8580. These cases are designed and marked for use with the camouflage screen. Camouflage system markings should be replaced with “Helicopter External Cargo Net, 10,000-pound capacity.”

## PROTECTIVE EQUIPMENT

| NSN | Description |
|---|---|
| 4240-00-052-3776 | Eye goggles |
| 8415-01-158-9445 | Gloves, electrical workers, size 9 |
| 8415-01-158-9446 | Gloves, electrical workers, size 10 |
| 8415-01-158-9447 | Gloves, electrical workers, size 11 |
| 8415-01-158-9448 | Gloves, electrical workers, size 12 |
| 8415-00-268-7859 | Gloves, leather |
| 4240-00-759-3290 | Headset (USAF) |
| 4240-00-762-2582 | Headset (USAF) |
| 8415-00-071-8786 | Helmet, flight deck (USN/USMC/USAF) |
| 6515-00-137-6345 | Plugs, ear, hearing protection |

## MISCELLANEOUS EQUIPMENT AND MATERIAL

| NSN | Description |
|---|---|
| 4030-00-360-0304 | Clevis assembly, small, MS 70087-1 |
| 5305-00-726-2553 | Bolt |
| 5310-00-835-2037 | Nut |
| 4030-00-678-8562 | Clevis assembly, medium, MS 70087-2 |
| 5305-00-940-8069 | Bolt |
| 5310-00-842-1190 | Nut |
| 4030-00-090-5354 | Clevis assembly, large, MS 70087-3 |
| 5305-00-177-5617 | Bolt |
| 5310-00-891-3428 | Nut |
| 4020-00-240-2146 | Cord, nylon, Type III, 550-pound breaking strength |
| 8305-00-958-3685 | Felt sheeting, 1/2-inch thick, 30-inch wide |
| 8305-00-191-1101 | Felt sheeting, 1/2-inch thick, 60-inch wide |
| 7520-00-079-0286 | Ink, marking, parachute, orange-yellow, marker |
| 7520-00-634-6583 | Ink, marking, parachute, orange-yellow, liquid |
| 7520-00-230-2734 | Ink, marking parachute, strata-blue, marker |
| 7520-00-286-5362 | Ink, marking parachute, strata-blue, liquid |
| 5825-00-917-3738 | Light, beacon, beanbag |
| 6260-01-074-4230 | Light, chemical wand, 30-minute glow time |
| 6260-00-106-7478 | Light, chemical wand, 6-hour glow time |
| 6260-01-074-4229 | Light, chemical wand, 12-hour glow time |
| 1670-00-783-5988 | Link assembly, Type IV |
| 1670-00-212-1149 | MB-1 chain assembly, 10,000-pound capacity |
| 1670-00-516-8405 | Chain assembly |
| 1670-00-753-3928 | Pad, energy-dissipating, honeycomb |
| 8135-00-664-6958 | Padding, cellulose, 20-inch by 60-foot |
| 8135-00-808-6446 | Padding, cellulose, 24-inch by 125-foot |
| 8345-00-174-6865 | Panel, marker, red-yellow, VS-17 |
| 4020-00-231-2581 | Rope, 3/8-inch, TR605 |
| 4020-00-968-1357 | Rope, fibrous, 1/2-inch, MIL-R-17343 |
| 6850-00-264-9038 | Solvent, dry cleaning, PD-680 |
| 7510-00-266-5016 | Tape, adhesive, pressure-sensitive, 2-inch wide roll, green |

## MISCELLANEOUS EQUIPMENT AND MATERIAL (CONTINUED)

| | |
|---|---|
| 7510-00-074-4969 | Tape, adhesive, pressure-sensitive, 2-inch wide roll, red |
| 1670-00-725-1437 | Tie-down strap, CGU-l/B, 5,000-pound capacity |
| 5340-01-204-3009 | Tie-down strap, web nylon, 5,000-pound capacity |
| 1670-00-937-0271 | Tie-down strap, web nylon, 10,000-pound capacity |
| 5365-00-937-0147 | D-Ring, aerial delivery |
| 1670-00-937-0272 | Load binder assembly |
| 1670-00-360-0340 | Quick-fit strap fastener |

### Two-point link assembly components:

| | |
|---|---|
| 5306-00-435-8994 | Bolt, 1-inch diameter, 4-inch long (2 each) |
| 5310-00-232-5165 | Nut, 1-inch diameter (2 each) |
| 1670-00-003-1954 | Plate, side, 5 1/2-inch long (2 each) |
| 5365-00-007-3414 | Spacer, large |
| 1670-00-574-8044 | Wand, static discharge |
| 1670-01-192-5535 | Wand, static discharge, 3-foot, PN 1610AS100-1, TAMCN C6254 |
| 5920-01-347-0728 | Wand, static discharge, 5-foot, PN 1610AS100-2, TAMCN C6252 |
| 8305-00-082-5752 | Webbing, nylon, tubular, 1/2-inch, 1,000-pound breaking strength |
| 8305-00-268-2411 | Webbing, cotton, 1/4-inch, 80-pound breaking strength |

### EXTERNAL LIFT DEVICES

| | |
|---|---|
| 1670-00-587-3421 | Bag, cargo, A-22, LIN B 14181, TAMCN C4070 |
| 3940-00-892-4380 | Cargo net, 14-foot square, 10-inch mesh |
| 3940-00-892-4374 | Cargo net, 14-foot square, 8-inch mesh |
| 1450-01-219-4360 | Mk105 pendant |
| 1450-00-414-7172 | Mk105 hoisting sling assembly, 6,000-pound capacity |
| 1450-00-881-8736 | Mk105 sling leg assembly |
| 4020-01-365-3115 | Pendant, reach, 11,000-pound capacity |
| 4020-01-337-3185 | Pendant, reach, 25,000-pound capacity |
| 1670-01-003-0803 | Releasable swivel hook pendant sling AC6000500 Mod 1 |
| 1450-00-169-6927 | Sling, pallet, Mk86, LIN S80670 |
| 1398-00-004-9175 | Sling, pallet, Mk100, LIN S80738 |
| 1670-00-103-6617 | Swivel hook sling leg, AC6000153 (USMC, USN) |

# APPENDIX C

## SLING CONVERSION CHARTS

| 10,000-POUND SLING SET CHAIN LINK NUMBER | 25,000-POUND SLING SET CHAIN LINK NUMBER | 40,000-POUND SLING SET CHAIN LINK NUMBER | 15,000-POUND MULTILEG SLING SET CHAIN LINK NUMBER |
|---|---|---|---|
| | 3 | | 51 |
| | 4 | | 52 |
| 3 | 5 | | 53 |
| 4 | 6 | | 54 |
| 5 | 6 | | 54 |
| 6 | 7 | 3 | 55 |
| 7 | 8 | 4 | 56 |
| 8 | 9 | 4 | 57 |
| 9 | 9 | 5 | 57 |
| 10 | 10 | 6 | 58 |
| 11 | 11 | 6 | 59 |
| 12 | 11 | 7 | 59 |
| 13 | 12 | 7 | 60 |
| 14 | 13 | 8 | 61 |
| 15 | 14 | 9 | 62 |
| 16 | 14 | 9 | 62 |
| 17 | 15 | 10 | No further conversions for 15,000-pound multileg sling set |
| 18 | 16 | 11 | |
| 19 | 16 | 11 | |
| 20 | 17 | 12 | |
| 21 | 18 | 13 | |
| 22 | 19 | 13 | |
| 23 | 19 | 14 | |
| 24 | 20 | 15 | |
| 25 | 21 | 15 | |
| 26 | 21 | 16 | |
| 27 | 22 | 16 | |
| 28 | 23 | 17 | |
| 29 | 24 | 18 | |
| 30 | 24 | 18 | |
| 31 | 25 | 19 | |
| 32 | 26 | 20 | |
| 33 | 27 | 20 | |
| 34 | 27 | 21 | |
| 35 | 28 | 21 | |
| 36 | 29 | 22 | |
| 37 | 30 | 22 | |
| 38 | 31 | 23 | |
| 39 | 31 | 24 | |
| 40 | 32 | 24 | |

## SLING CONVERSION CHARTS (CONTINUED)

| 10,000-POUND SLING SET CHAIN LINK NUMBER | 25,000-POUND SLING SET CHAIN LINK NUMBER | 40,000-POUND SLING SET CHAIN LINK NUMBER | 15,000-POUND MULTILEG SLING SET CHAIN LINK NUMBER |
|---|---|---|---|
| 41 | 33 | 25 | No further conversion for 15,000-pound multileg sling set |
| 42 | 34 | 25 | |
| 43 | 34 | 26 | |
| 44 | 35 | 26 | |
| 45 | 36 | 27 | |
| 46 | 37 | 28 | |
| 47 | 38 | 28 | |
| 48 | 39 | 29 | |
| 49 | 39 | 29 | |
| 50 | 40 | 30 | |
| 51 | 41 | 30 | |
| 52 | 42 | 31 | |
| 53 | 43 | 32 | |
| 54 | 44 | 32 | |
| 55 | 45 | 33 | |
| 56 | 45 | 33 | |
| 57 | 46 | 34 | |
| 58 | 47 | 34 | |
| 59 | 48 | 35 | |
| 60 | 49 | 36 | |
| 61 | 50 | 36 | |
| 62 | 50 | 37 | |
| 63 | 51 | 37 | |
| 64 | 52 | 38 | |
| 65 | 53 | 38 | |
| 66 | 54 | 39 | |
| 67 | 54 | 40 | |
| 68 | 55 | 40 | |
| 69 | 56 | 41 | |
| 70 | 57 | 41 | |
| 71 | 57 | 42 | |
| 72 | 58 | 42 | |
| 73 | 59 | 43 | |
| 74 | 60 | 44 | |
| 75 | 61 | 44 | |
| 76 | 61 | 45 | |
| 77 | 62 | 46 | |
| 78 | 63 | 46 | |
| 79 | 64 | 47 | |
| 80 | 65 | 48 | |

## SLING CONVERSION CHARTS (CONTINUED)

| 10,000-POUND SLING SET CHAIN LINK NUMBER | 25,000-POUND SLING SET CHAIN LINK NUMBER | 40,000-POUND SLING SET CHAIN LINK NUMBER | 15,000-POUND MULTILEG SLING SET CHAIN LINK NUMBER |
|---|---|---|---|
| 81 | 65 | 48 | No further conversion for 15,000-pound multileg sling set |
| 82 | 66 | 49 | |
| 83 | 67 | 49 | |
| 84 | 68 | 50 | |
| 85 | 68 | 51 | |
| 86 | 69 | 51 | |
| 87 | 70 | 52 | |
| 88 | 71 | 53 | |
| 89 | 72 | 53 | |
| 90 | 72 | 54 | |
| 91 | 73 | 55 | |
| 92 | 74 | 55 | |
| 93 | 75 | 56 | |
| 94 | 76 | 57 | |
| 95 | 76 | 57 | |
| 96 | 77 | 58 | |
| 97 | 78 | 58 | |
| 98 | 79 | 59 | |
| 99 | 79 | 60 | |
| 100 | 80 | 60 | |
| 101 | 81 | 61 | |
| 102 | 82 | 62 | |
| 103 | 83 | 62 | |
| 104 | 83 | 63 | |
| 105 | 84 | 64 | |
| 106 | | 64 | |
| 107 | | 65 | |

# APPENDIX D

## FABRICATION OF A FIELD EXPEDIENT STATIC DISCHARGE WAND

Discharging static electricity is an important step to the overall safety of the hookup team. You can assemble a field expedient static discharge wand using the following components:

•Grounding rod, NSN 5975-00-240-3859. This 1/2-inch grounding rod or equivalent is used for the static discharge wand and grounding rod.

•Conductor splice, NSN 5975-00-233-9022. The conductor splice clamps the grounding cable to the wand.

•Grounding cable, NSN 4010-00-286-2681. If you do not want to order this 1000 foot roll of cable, contact the nearest petroleum handling or ground power section to obtain a length of grounding cable.

•Electrical clip, NSN 5999-00-260-0447. You will receive electrical clips for five static discharge wands.

•Rubber hose, NSN 4720-00-277-8985. Order enough of this 5/8-inch inside diameter rubber hose to cut a 12-inch section for each static discharge wand.

Use the following steps to assemble the field expedient static discharge wand:

•Cut a section of grounding cable approximately 20 feet long. Strip 1 inch of insulation off both ends of the cable.

•Cut a 20-inch and a 16-inch section from the generator grounding rod. The 20-inch section will be the static discharge wand and the 16-inch section will be the grounding rod.

•Using the conductor splice, clamp one end of the cable to the 20-inch section of rod approximately 11 inches from the end of the rod (Figure D-1).

•Slide the 12-inch piece of rubber hose over the cable and grounding rod so that the rod is approximately 1 inch from the end of the rubber hose. Fill the end of the hose with silicone sealant to provide insulation protection from the bare end of the rod (Figure D-2). If a rubber hose is not available, wrap electrical tape or pressure-sensitive tape around the clamp and the lower portion of the rod so that the tape is approximately 1/2-inch thick.

•Bend the last two inches of the rod 90 degrees to form a hook to connect to the helicopter cargo hook (Figure D-3).

•Sharpen one end of the 16-inch ground rod into a point to make it easier to drive into the ground.

•Attach an electrical clip to the other end of the 20-foot cable. Connect the clip to the grounding rod (Figure D-4).

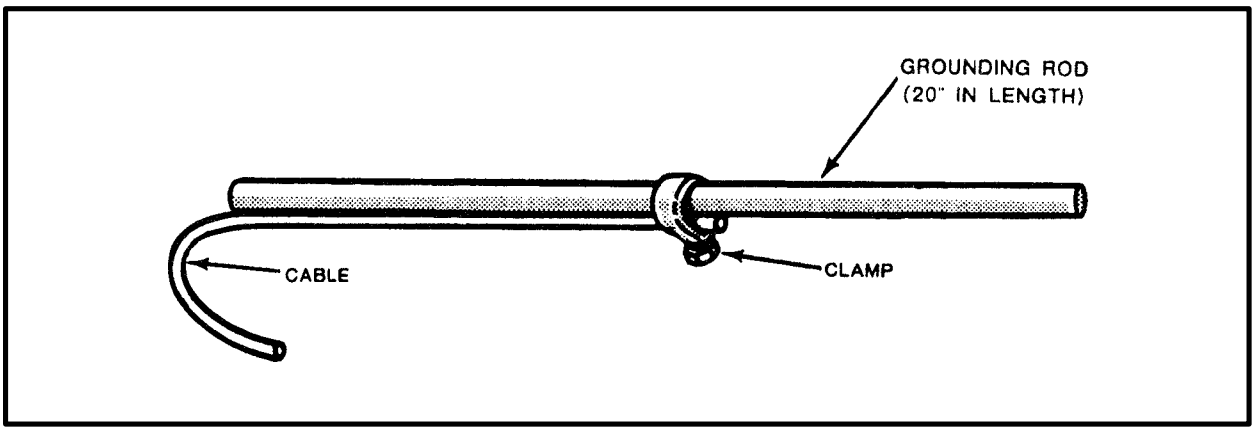


*Figure D-1. Cable Clamped to Rod*

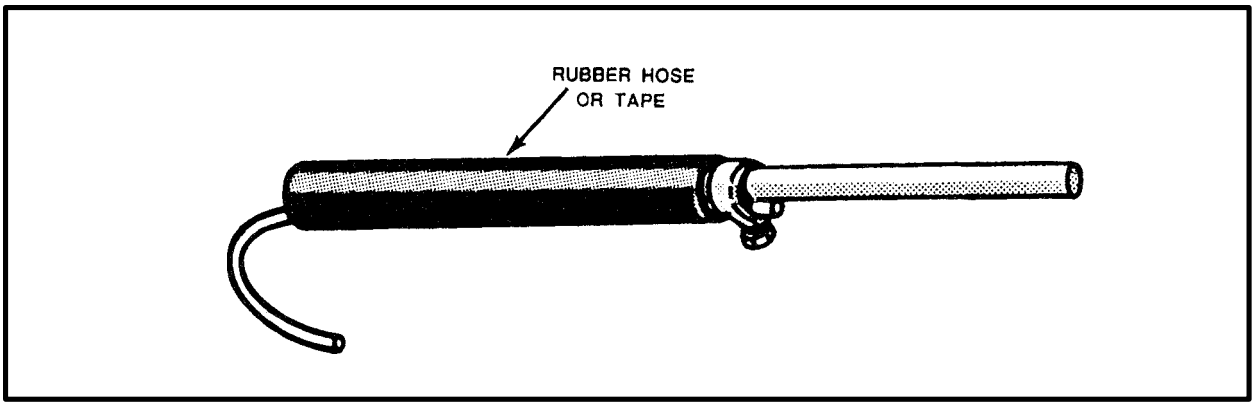


*Figure D-2. Insulation Around Rod*

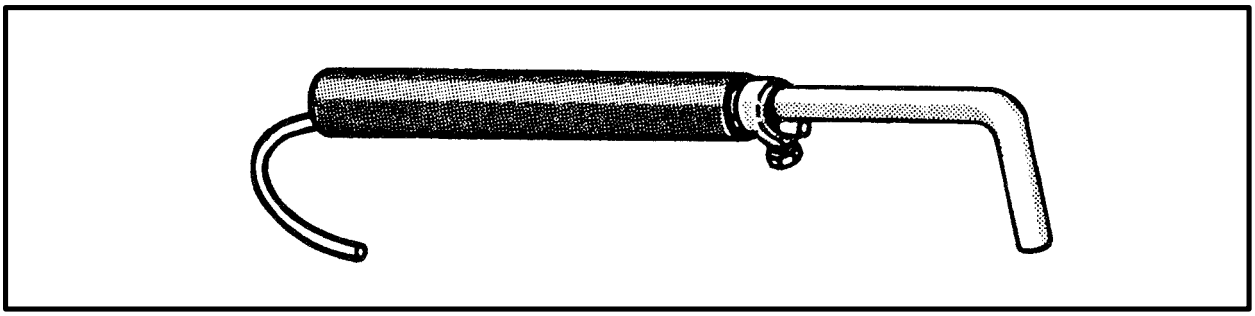

*Figure D-3. Static Discharge Wand Hook*

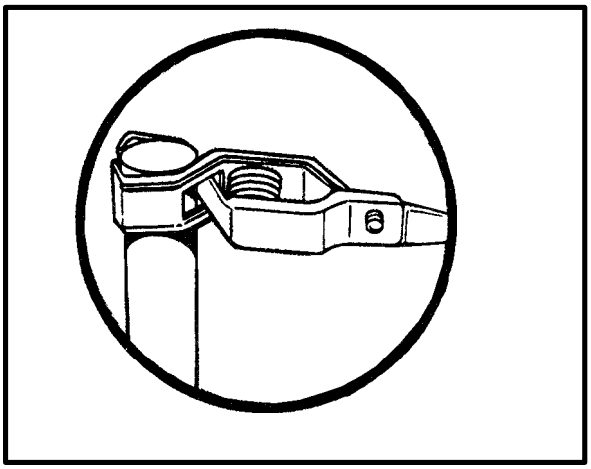

*Figure D-4. Clamp Connected to Grounding Rod*

•Use a multimeter to perform an electrical continuity check between the hook end of the static discharge wand and the electrical clip on the grounding rod. Isolate and repair or replace the affected part. Lack of continuity can be a safety hazard to the hookup team.

**WARNING**

**Keep hands away from the bare metal portion of the static discharge wand when contacting the cargo hook to discharge the static electricity. Severe electrical shock can result from improper static discharge wand operation.**

Inspect the wand for serviceability before and after each time you use the wand. Pay particular attention to any condition that may prevent good continuity, such as corrosion, broken cable, loose clamp, or broken insulation. Repair as necessary.

# APPENDIX E

## SLING LOAD OPERATION CHECKLIST

## (USMC HELICOPTER SUPPORT TEAM)

I. Coordination

A. Mission and tasks _____ / _____

B. HST commander _____ / _____

C. Squadron operations officer _____ / _____

D. Supported unit POC _____ / _____

E. ZIPPO briefing (See Appendix H) _____ / _____

II. Equipment

A. Personnel

1. Flak jacket _____

2. Helmet _____

3. Goggles _____

4. Coveralls _____

5. 782 Gear w/water _____

6. Other gear as required _____

B. Organizational

1. Slings, inspected _____

2. Slings, staged _____

3. Nets, inspected _____

4. Nets, staged _____

5. Water cans _____

6. UHF radio operations check _____

7. FM radio operations check, qty 2 _____

8. Gail Light System operations check _____

9. Static discharge wands _____

10. HST helmet _____

11. Gloves, lineman _____

12. Flashlights _____

13. Other equipment as required _____

III. Logistic Support

A. Corpsman _____

B. Radio operator _____

C. Emergency vehicle _____

D. Messing provisions _____

E. Other equipment as required _____

IV. Communications Requirements — Primary / Alternate

A. Helo UHF frequency _____ / _____

B. Helo FM frequency _____ / _____

C. LSB/Shore Party control net frequency _____ / _____

D. Range Control/FSCC _____ / _____

E. HDC/DASC frequency _____ / _____

F. TACLOG frequency _____

V. Safety Briefing

A. Abort procedures _____

B. Approach and exit direction _____

C. Hand-and-arm signals _____

D. Radio procedures _____

E. HST marshaling _____

F. MEDEVAC procedures _____

G. Procedures for manually disengaging the cargo hook. _____

H. Man-overboard procedures (if applicable) _____

I. Aircraft emergency (both with and without load) _____

J. FOD prevention _____

K. Discuss safety items _____

## APPENDIX F

# ZONE INSPECTION, PLANNING, PREPARATION, AND OPERATION (ZIPPO) EVALUATION BRIEF FORMAT (NWP 55-9-ASH)

(Use only appropriate lines, this is the entire format)

Mission Number _____

Unit Supported/Call Sign _____/_____

ALO Call Sign _____

HC(A) Call Sign _____

TAC(A)/AFAC Call Sign _____/_____

Helo Transport Cmdr Call Sign _____

Attack Helo Flight Coordinator/Leader Call Sign _____

F/W Call Sign _____

Number and Type of Helos _____/_____

_____/_____

_____/_____

_____/_____

Pick-Up Coordinates _____

LZ Description _____

Drop Coordinates _____

LZ Description _____

| | |
|---|---|
| Approach Retirement Routes | _____ |
| | _____ |
| | _____ |
| Total Troops/Heliteam Size | _____ / _____ |
| Internal Cargo Loads: Type/Weight | _____ / _____ |
| External Cargo Loads: Type/Weight | _____ / _____ |
| Assault FM | PRI _____ /SEC _____ |
| Assault UHF | PRI _____ /SEC _____ |
| Ground Tactical/LZ Control Call Sign | PRI _____ /SEC _____ |
| F/W Control FM/UHF | _____ / _____ |
| Weather Minimums/Alternate Plan | _____ / _____ |
| Pick-Up Time/Latest Acceptable | _____ / _____ |
| L-Hour/Latest Acceptable | _____ / _____ |
| Arty Prep Time/End of Mission | _____ / _____ |
| F/W Flights/TOS/Ordnance | _____ |
| F/W Cap/TOS/Ordnance | _____ / _____ / _____ |
| Rules-of-Engagement/Clearance to Fire | _____ / _____ / _____ |
| | _____ |
| Intelligence | _____ / _____ |
| | _____ / _____ |
| Refuel | _____ |
| Min Bingo | _____ # _____ MINS |

Mission Undertake _____ # _____ MINS

Length of (estimated) _____ MINS

MEDEVAC

Priority _____

Precedence _____

Resupply

Internal _____ # WT _____ LIFTS

External _____ # WT _____ LIFTS

# APPENDIX G

## MC-140 HELMET, COMPONENT LISTING (USMC HST) TAMCN C4992

This appendix lists the components of the MC-140 helmet.

| NSN | PART NUMBER | DESCRIPTION |
|---|---|---|
| 8415-01-157-4806 | 79F4680-1 | Helmet, MC-140, medium, complete |
| 8415-01-157-4807 | 79F4680-2 | Helmet, MC-140, large, complete |
| 8415-01-137-4763 | 79D4717-1 | Helmet shell assembly, medium |
| 8415-01-137-4762 | 79D4717-2 | Helmet shell assembly, large |
| NA | 79D4676 | Face shield assembly |
| 8415-01-137-4758 | 67Cl730 | Sizing pad assembly |
| 5965-01-135-2058 | 79D4677 | Headset-microphone assembly |
| 5965-01-135-2644 | 78B3836 | Earphone |
| 5930-01-135-9725 | 73C2593 | Switch assembly |
| 8415-01-137-4756 | 79D4673 | Retention assembly |
| 4240-01-148-3589 | 79C4675-1 | Respirator assembly |
| 8415-01-137-4757 | 79D4674 | Dust shield assembly |
| 5995-00-302-7515 | 7lB2389 | Upper cord assembly |
| 5995-01-133-6665 | 79C4678 | Lower cord assembly |
| 8415-00-163-9048 | 72B2477 | Chin strap pad |
| 8415-01-137-8447 | 8OC5008 | Chin strap assembly |
| 8415-01-149-8134 | 79D4682 | Face shield lens, clear |
| 8415-01-137-4766 | 79C4672-1 | Suspension assembly, medium |
| 8415-01-137-4767 | 79C4672-2 | Suspension assembly, large |
| 8415-01-137-4760 | 8OD4740 | Energy absorbing liner, medium |
| 8415-01-137-4761 | 8OD4741 | Energy absorbing liner, large |
| 8415-01-137-4759 | 67Al8lO | Crown pad |
| 9390-01-132-5361 | 78A3928 | Beading 3.3-foot piece |
| 5965-01-136-5401 | 79B4681 | Microphone/cord assembly |
| 8415-01-137-4755 | 8IB5170 | Attachment tab respirator assy |
| 6135-01-138-8157 | 78A3906 | Battery, EP-675 |
| 8415-01-137-4751 | 79B4713 | Filler pad, 1/4 inch thick |
| 8415-01-137-4754 | 79B4714 | Filler pad, 3/8 inch thick |

| NSN | PART NUMBER | DESCRIPTION |
|---|---|---|
| 5965-01-093-0590 | 72B2484 | Receiver, earphone, retainer |
| 5965-01-126-2592 | 74C2698 | Earpad seal assy, 3/8-inch |
| 5995-01-133-6437 | 79B4705 | Cord, ear to ear |
| 8415-01-137-4753 | 8OB4896 | Lower strap, respirator |
| 5930-01-135-4919 | 7lC2313 | Switch with cover assembly |
| 5930-01-135-4923 | 8OA4975 | Push button switch |
| 5965-01-135-1283 | 79D4715 | Earcup assembly, left |
| 5965-01-135-2646 | 79C4716 | Earcup assembly, right |
| 5995-00-302-7520 | 7lA2391 | Lead assembly |
| 5340-01-137-8599 | 78A3937 | Retainer, pawl nut |
| 8415-01-137-4752 | 8lB5172 | Upper strap, respirator |
| 5330-00-316-0360 | 7lA2320 | “O” ring, radio switch |
| 5330-00-316-0358 | 7lA2333 | “O” ring, radio switch |
| NA | 77A3674-2 | Screw, black, MS35332 |
| NA | 8OB4927 | Retainer, earcup |
| 5965-01-142-7418 | 78B3897-4 | Outside communication assembly |
| NA | 78A3901 | “O” ring, outside comm assy |
| 5965-01-135-2645 | 79C4711 | Earcup assembly, left |
| 4240-01-146-6985 | 8OC4920-1 | Respirator only |
| 5965-01-135-2647 | 79C4712 | Earcup assembly, right |

# APPENDIX H

## AIR FORCE (TAC) UNIT EQUIPMENT REQUIREMENTS

The following items comprise one standard sling bag:

| NSN | DESCRIPTION | QTY |
|---|---|---|
| 8460-00-606-8366 | Bag, storage | 1 |
| 1670-01-062-6301 | Sling, nylon, cargo, 2-loop, 3-foot | 3 |
| 1670-01-062-6303 | Sling, cargo, 2-loop, 12-foot | 6 |
| 1670-01-062-6302 | Sling, cargo, 2-loop, 20-foot | 4 |
| 4030-00-678-8562 | Clevis, medium, suspension cargo | 4 |
| 4030-00-360-0304 | Clevis, small, suspension cargo | 4 |
| 1670-00-360-0340 | Fastener strap, cargo tie-down | 2 |
| 1670-00-360-0248 | Load binder, aircraft tie-down | 2 |
| | Wand, static discharge, locally manufactured equivalent in accordance with Appendix D | 1 |
| | Wrench, open end 1 1/16 - 1 1/8 | 2 |
| | Wrench, open end 7/8 - 15/16 | 2 |

Units require the following standard bags to complete their mission:

| UNIT | NUMBER OF BAGS REQUIRED |
|---|---|
| Air support radar team (ASRT) | 4 |
| Control and reporting center (CRC) | 6 |
| Control and reporting post (CRP) | 6 |
| Forward air control post (FACP) | 6 |

# APPENDIX I

# SLING LOAD INSPECTION RECORD

## 1-1. INTRODUCTION

In order to improve sling load safety, the Department of the Army is implementing inspection procedures for all **ARMY** equipment being moved by the sling load method of air delivery effective 1 October 1997. All Army loads will require an inspection by a qualified inspector prior to the arrival of the supporting aircraft using the Sling Load Inspection Record shown on page I-2.

## 1-2. INSPECTOR QUALIFICATIONS

Inspectors must meet the following qualifications:

- Be in the grade of E4 or above **AND**
- Be a graduate of one of the following courses:
  - Pathfinder.
  - Air Assault.
  - Sling Load Inspector Certification.

## 1-3. DISTRIBUTION OF THE SLING LOAD INSPECTION RECORD

The Sling Load Inspection Record requires three copies. Distribute the form as follows:

- Copy One - To the supporting aviation unit.
- Copy Two - Securely taped or tied to the load.
- Copy Three - To the supported unit.

The Sling Load Inspection Record form may be reproduced locally pending official distribution.

## 1-4. COMPLETING THE SLING LOAD INSPECTION RECORD

Procedures for completing the Sling Load Inspection Record are as follows:

- Block 1 - Supported unit identification.
- Block 2 - Item description and serial/bumper number.
- Block 3 - Weight of load.
- Block 4 - Supporting aviation unit identification.
- Block 5 - Type of aircraft used.
- Block 6 - FM used to rig the load.
- Blocks 7 through 10 - Fill out only blocks that pertain to your load. Persons rigging and inspecting the load must INITIAL the appropriate blocks.
- Block 11 - Identifies the supported unit person rigging the load and the date the load was rigged.
- Block 12 - Identifies the supported unit person inspecting the load and the date the load was inspected.
- Remarks - List any deficiencies found in the load.

# SLING LOAD INSPECTION RECORD

For use of this form, see FM 10-450-3; the proponent agency is TRADOC

| 1. SUPPORTED UNIT | 2. ITEM DESCRIPTION AND SERIAL/BUMPER NO. | 3. WEIGHT |
|---|---|---|
| ADFSD | HMMWV / ADFSD 14 | 5200 lb. |

| 4. SUPPORTING AVIATION UNIT | 5. TYPE AIRCRAFT | 6. RIGGED IAW FM NO |
|---|---|---|
| 1st/160th SOAR | UH60 | FM 55-450-4 |

| INITIAL ONLY ITEMS APPLICABLE TO YOUR SPECIFIC LOAD | LOAD RIGGED BY | LOAD INSPECTED BY |
|---|---|---|
| **7. VEHICLE OR LOAD** | | |
| A. CORRECTLY POSITIONED | MR | TWH |
| B. EMERGENCY BRAKE SERVICEABLE AND SET | MR | TWH |
| C. FUEL LEVEL NOT TO EXCEED 3/4 TANK | MR | TWH |
| D. PREPARED AND PADDED IAW THE APPROPRIATE FM | MR | TWH |
| **8. SLING SET** | | |
| A. CORRECT NUMBER AND SIZE (10K OR 25K) 10K | MR | TWH |
| B. INSPECTED FOR SERVICEABILITY IAW FM 10-450-3 | MR | |
| C. SLING LEGS PROPERLY ROUTED AND ATTACHED TO LIFT POINTS | MR | TWH |
| D. CORRECT LINK COUNT FRONT AND REAR F 80 R 3 | MR | TWH |
| E. CHAIN SECURED IN GRAB LINK | MR | TWH |
| F. EXCESS CHAIN TIED OR TAPED (10 LINKS OR MORE) | MR | TWH |
| G. BREAKAWAY TIES INSTALLED | MR | TWH |
| H. APEX ATTACHED | MR | TWH |
| I. APEX SPACER INSTALLED IF REQUIRED | MR | TWH |
| J. REACH PENDANT INSTALLED IF REQUIRED | | |
| **9. A-22 CARGO BAG** | | |
| A. INSPECTED FOR SERVICEABILITY IAW FM 10-450-3 | | |
| B. RIGGED IAW FM 10-450-3 | | |
| C. SUSPENSION WEBS ATTACHED TO CONTAINER AND TAPED | | |
| D. CLEVIS BOLT THROUGH SUSPENSION WEB D-RINGS (4 EACH) | | |
| E. CORRECT SLING LEG ATTACHED | | |
| F. APEX ATTACHED (CORRECT TYPE) | | |
| G. APEX SPACER INSTALLED IF REQUIRED | | |
| **10. CARGO NETS** | | |
| A. CORRECT SIZE (5K OR 10K) | | |
| B. INSPECTED FOR SERVICEABILITY IAW FM 10-450-3 | | |
| C. LOAD CORRECTLY POSITIONED | | |
| D. LIFTING LEGS PROPERLY CONNECTED TO APEX FITTING | | |
| E. HOOKS TAPED | | |
| F. LIFTING LEGS TAPED OR TIED (BREAKAWAY) | | |
| G. CORRECT NUMBER AND SIZE SLING LEGS | | |

**REMARKS:**

**11. LOAD RIGGED BY:**

| UNIT (PRINT) | NAME (PRINT) | INITIALS | RANK |
|---|---|---|---|
| ADFSD | Rumley, M. L. | MR | SFC |

| SIGNATURE | DATE |
|---|---|
| M. L. Rumley | 18 Feb. 97 |

**12. LOAD INSPECTED BY:**

| UNIT (PRINT) | NAME (PRINT) | INITIALS | RANK |
|---|---|---|---|
| ADFSD | HALL, THOMAS | TWH | SSG |

| SIGNATURE | DATE |
|---|---|
| Thomas W Hall Jr | 18 Feb 97 |

DA Form 7382-R Mar 97

# APPENDIX J

## RECOMMENDED UNIT SLING LOAD TRAINING

This appendix lists the recommended types of instruction and the hours of training for units to train personnel in sling load operations.

| INSTRUCTIONAL BLOCK | HOURS |
|---|---|
| TYPES OF HELICOPTERS AND LIMITATIONS | 0.5 |
| CARGO CARRYING DEVICES (A-22/NETS) | 0.5 |
| SLING SETS (10K/25K) | 0.5 |
| REACH PENDANTS/HARDWARE | 0.5 |
| INSPECTION FORM | 0.5 |
| SIGNALMAN DUTIES AND RESPONSIBILITIES | 1.5 |
| HOOKUP TEAM DUTIES AND RESPONSIBITIES | 0.5 |
| SAFETY EQUIPMENT | 0.5 |
| PREPARATION AND SETUP OF PZ/LZ | 1 |
| RIGGING A-22 CARGO BAG AND CARGO NETS | 2 |
| RIGGING FUEL BLIVETS | 2 |
| RIGGING HMMWV | 2 |
| RIGGING EXERCISE (SLING LOADS) | 3 |

# GLOSSARY

## Section 1. ACRONYMS AND ABBREVIATIONS

**ACC** Air Combat Command
**ADE** Aerial delivery equipment
**AFAC** airborne forward air controller
**AFI** Air Force instruction
**AFSOC** Air Force Special Operations Command
**ALO** air liaison officer
**AMC** Air Mobility Command
**AR** Army regulation
**ASRT** air support radar team
**ATCOM** US Army Troop Command
**CAP** carrier air patrol (fighters)
**CCO** combat cargo officer
**cdr** commander
**CG** commanding general
**cm** centimeter
**CMC** Commandant of the Marine Corps
**Comdt** commandant
**COMDTINST** commandant instructions
**COMSEC** communications security
**CONEX** container express
**CRC** control and reporting center
**CRP** control and reporting post
**DA** Department of the Army
**DASC** direct air support center
**DC** District of Columbia
**DO** director of operations
**DOD** Department of Defense
**EMCOM** emergency communications
**FACP** forward air control post
**FM** frequency modulated; field manual
**FMF** Fleet Marine Force
**FMFM** Fleet Marine Force Manual
**FOD** foreign object damage (and the objects themselves)
**FSC** Federal supply classification
**FSCC** fire support coordination center
**F/W** fixed wing
**GA** Georgia
**GAIL** glide angle indicator light
**HC(A)** helicopter commander (airborne)
**HCE** helicopter control element
**HDC** helicopter direction center
**helo** helicopter
**how** howitzer
**HST** helicopter support team
**IAW** in accordance with
**kg** kilogram
**LB** Pound
**LHA** landing helicopter assault
**LHD** landing helicopter dock
**LP** landing point
**LPD** landing platform dock
**LPH** landing platform helicopter
**LSB** landing support battalion
**LSD** landing ship dock
**LSE** landing signal enlisted
**LSO** landing signal officer
**LST** landing ship tank
**LZ** landing zone
**m** meter
**MCCDC** Marine Corps Combat Development Command
**MCLB** Marine Corps Logistics Base
**MCO** Marine Corps order
**MEDECEC** medical evacuation
**Mk** mark
**MRE** meals ready to eat
**mm** millimeter
**MO** Missouri
**NAEC** Naval Air Engineering Center
**NATOPS** Naval Air Training and Operating Procedures
**NAVAIR** Naval Air Systems Command
**NAVSEC** Navy ship engineering center
**NCOIC** noncommissioned officer in charge
**NJ** New Jersey
**NRDEC** Natick Research, Development, and Engineering Center
**NSN** national stock number
**NVG** night vision goggles
**NWP** Naval Warfare Publication
**PA** Pennsylvania
**Pam** pamphlet
**part no** part number
**POC** point of contact
**QDR** quality deficiency report
**SF** standard form
**SOI** signal operation instructions
**SOP** standing operating procedure
**STANAG** Standardization Agreement
**TAMCN** table of authorized materiel control number
**TB** technical bulletin
**TM** technical manual

**TOS** time on station
**UHF** ultra high frequency
**US** United States (of America)
**USA** United States Army
**USAF** United States Air Force
**USCG** United States Coast Guard
**USMC** United States Marine Corps
**USN** United States Navy
**VA** Virginia
**VERTREP** vertical replenishment
**VOD** vertical onboard delivery
**ZIPPO** zone inspection, planning, preparation, and operation

## Section II. TERMS

**accompanying load** cargo suspended below a sling load such as a cargo net carried beneath a howitzer.

**aft** toward the rear, behind, or toward the tail of the air craft.

**aft cargo hook** cargo hook located aft of the center or main cargo hook.

**apex fitting** the uppermost point (clevis, shackle, ring, or loop) that gathers the sling tension members and attaches to the cargo hook.

**apex fitting pin** a headed pin that extends through the two ends of the apex fitting clevis and retained in place by a bolt and nut.

**apex fitting spacer** hour-glass shaped bushing that fits over the apex fitting pin and causes the apex fitting to stay centered on the cargo hook.

**apex ring** see apex fitting.

**apex shackle** see apex fitting.

**apex shackle fitting** see apex fitting.

**approach azimuth** direction of the aircraft approach to the landing point, usually expressed in degrees and measured clockwise from a reference point.

**basket hitch** type of attachment in which a flat web nylon strap is formed in the shape of the letter "U" and the two ends are connected side by side.

**basket leg** the cable on a pallet sling that encircles the load.

**becket** a short length of rope with an eye on one or both ends used to secure items, such as eyelets or coils of rope.

**bight** a formed loop in a rope or cable.

**breakaway technique** using material with a low breaking strength such as tape or cotton webbing to temporarily restrain the sling equipment from becoming entangled on the load as the helicopter puts tension on the sling.

**breaking strength** (tensile strength) resistance to breaking, commonly measured in pounds.

**brownout** loss of orientation with respect to the horizon caused by blowing sand, dust, or dirt.

**cable-suspended external cargo sling system** cargo hook attached to the bottom of the fuselage by a system of cables.

**cargo hoist** a device used to raise, lower, or winch cargo.

**cargo hook** suspension hook device on which the apex fitting is placed to transport a sling load.

**cargo hook keeper** spring loaded device used to prevent the apex fitting from sliding off the cargo hook load beam.

**cargo hook loading pole (shepherd's hook)** a pole with a hook on one end used by the aircrew member to pick up the apex fitting and connect it to the cargo hook. Used for loads when the hookup team cannot stand on top of the load.

**cargo net** meshed arrangement of straps or cords that have been knotted or woven together at regular intervals and used to transport supplies and equipment.

**cargo sling** a strap, chain, or other material used to hold cargo items securely which are to be hoisted, lowered, or suspended.

**cargotainers** pallet with wire mesh sides that fold down for compact storage.

**castellated nut** hexagon shaped nut with a slot in each of the six sides and secured in place by a cotter pin.

**cellulose** cushioning or padding material used to protect the load or sling legs.

**center (main) cargo hook** cargo hook located in the center of the helicopter.

**center of balance** location about which an item would balance if it were possible to support the load at that point.

**center of gravity** see center of balance.

**centerline** an imaginary line that extends lengthwise and bisects the bottom of the helicopter fuselage.

**chemlites** see cyalume light stick.

**choker hitch** knot formed by placing a strap or cord around an item and passing the free end of the strap or cord through the loop formed by the other end.

**clevis** a "U" shaped yoke device with a bolt or pin through the two ends.

**connector link** metal link device that joins the ends of a nylon web loop together, such as used on the web ring of the 15,000-pound capacity multi-leg sling.

**constant power** the point at which a helicopter engine produces a fixed level of performance.

**cyalume light stick** plastic tube filled with a liquid chemical and a glass vial that when activated, produces a glowing light.

**day approach** helicopter approach to the landing point during daytime operations.

**deck crew** personnel on a ship involved with preparing and rigging loads, guiding the helicopter, and connecting the load to the helicopter.

**down wash** (rotor wash) high velocity of air movement under a hovering helicopter.

**dual-point load** cargo or equipment rigged and suspended from two cargo hooks.

**end bar** the removable side of a connector link.

**exit path** the track or course of an aircraft departing the landing point.

**eyesock** loop formed at both ends of a sling leg.

**field expedient drogue device** device locally fabricated and connected to a sling load whose purpose is to increase the stability of the load.

**field expedient static discharge wand** a device fabricated from readily available material for the purpose of discharging the static electric charge from the helicopter.

**flat web nylon** flat nylon strap or sling fabricated in either concentric loops or single lengths.

**floating web keepers** see sliding keepers.

**fore** forward or front.

**forward cargo hook** cargo hook located forward of the center or main cargo hook.

**forward slope** ground whose surface forms an upward angle or incline with the horizon.

**free-swinging cargo hook** cargo hook attached to the end of a pendant or cable instead of attached directly to the helicopter fuselage.

**fuselage** central body portion of a helicopter designed to accommodate the crew, passengers, and

cargo.

**glide angle indicator light (GAIL)** a device that emits a three-color light beam that indicates a safe glide path over approach obstacles onto a landing site.

**glide path angle** approach angle of the helicopter to the landing point.

**ground crew** personnel on the ground involved with preparing and rigging loads, guiding the helicopter, and connecting the load to the helicopter.

**immediate mission** a task or support which arises during the course of a battle and which by its nature cannot be planned in advance.

**keeper** a device that keeps something in position, such as a chain link in the grabhook or an apex fitting on the helicopter cargo hook.

**knotless nylon cord cargo net** cargo net manufactured from braided, nylon cord joined by a knotless intersection method.

**landing point** a point within a landing site where one helicopter or vertical takeoff and landing aircraft can land.

**landing site** a site within a landing zone that contains one or more landing points.

**landing zone** any specified area used for the landing of aircraft.

**lanyard** a short piece of rope or cable used to fasten something or an extension of a shorter device.

**lashing straps** flat web nylon strap with a D-ring on one end.

**latch bar** the movable top part of the pallet sling tensioner.

**lateral slope** ground whose surface forms an angle orientated from either right to left or left to right with the horizon.

**lifting eye** loop in a cable, rope, or other device used to lift the object.

**lifting leg hook** hook on the end of a sling leg, usually used with a hoisting sling.

**lifting points** see lifting provision.

**lifting provision** an integral part of the equipment commonly called a lug, eye, shackle, or ring that provides a means of attaching a sling for safe lifting.

**lifting shackle** ring or clevis that provided a means of attaching sling for safe lifting.

**load beam** structural member of the cargo hook that supports the weight of the external load.

**load binders** locking device used to tighten and secure lashing straps.

**load oscillation** movement of a sling load back and forth like a pendulum.

**locking detent** slot in the pallet sling tensioner stirrup that engages the release knob bar assembly on the latch bar.

**low-response external cargo sling system** cargo hook attached to a suspension frame below the fuselage by a system of cables and pulleys.

**lunette** towing eye on the trailer drawbar.

**main cargo hook winch** mechanical drum with a cable attached to raise and lower the cargo hook.

**manual release knob** lever, knob, or other device that when actuated by either the ground crew or aircrew member, causes the cargo hook to open.

**manual release lever** lever, knob, or other device that when actuated by either the ground crew or aircrew member, causes the cargo hook to open.

**mine sweeping** the technique of searching for or clearing mines using mechanical or explosive gear, which physically removes or destroys the mine or produces in the area the influence fields necessary to actuate the mine.

**Mk86 (mark 86)** mark 86 - designation given to the

pallet sling that can accommodate a pallet load that is 29 to 40 inches high.

**Mk100 (mark 100)** mark 100 - designation given to the pallet sling that can accommodate a pallet load that is 48 to 70 inches high.

**multileg-pole pendant** reach pendant with one or more removable sling legs.

**night approach** helicopter approach to the landing point during night operations.

**night vision goggle(s)** an electo-optical image intensify ing device that detects visible and near-infrared energy, intensifies the energy and provides a visible image for night viewing. Night vision goggles can be either hand-hed or helmet mounted. Also called NVG.

**no-load condition** situation during which there is no tension in the sling legs.

**no-sew fitting** a web keeper secured in place by a locking fork.

**nylon donut** ring formed from joining two ends of a flat web nylon strap using a Type IV link or two-point link connector.

**oscillate** swing back and forth like a pendulum.

**pendant cargo hook** cargo hook that is connected to the end of a strap and suspended below the fuselage.

**pendant (releasable swivel hook)** high strength sling constructed of multiple plies of nylon webbing, with a remotely operated, manually released, full 360-degree swivel hook.

**permanent keepers** a web keeper that encircles all of the loops of a nylon web strap and is either sewn or otherwise retained in place.

**pickup zone** landing site designated where passengers or cargo are picked up.

**piggyback load** cargo suspended below a sling load such as a cargo net carried beneath a howitzer.

**port side** left-hand side looking forward.

**preplanned mission** a task or support in accordance with a program, planned in advance of the operation.

**quick-fit strap fasteners** metal V-shaped device with a double bar and a friction grip crossbar used with lashing straps.

**reach pendant** braided fabric rope assembly with an attached stiffened reach tube and a loop on each end.

**reach tube** length of tubing that encases the braided rope portion of a reach pendant.

**receiving unit** unit receiving the transported supplies and equipment.

**relative humidity** the ratio of absolute humidity to the maximum possible density of water vapor in the air at the same temperature. Relative humidity affects helicopter performance.

**rendezvous point** a clearly defined and visible point or assembly area for the ground crew during helicopter operations.

**retainer strap** nylon web loop interwoven on the web ring of the 15,000-pound capacity multileg sling that retains the sling legs on the lower part of the web ring.

**retention pins** metal devices used to secure objects such as devices or shackles to the vehicle frame

**rope lay** individual grouping of wire strands woven or twisted together when braided together form a cable.

**rotor wash** see down wash.

**safe working load** the maximum capacity of a lifting device used in helicopter sling load operations.

**signalman** a member of the ground crew who communicates with the pilot by means of hand and arm signals.

**single-point load** cargo or equipment rigged and

suspended from one cargo hook.

**sliding keepers** a web keeper located near the ends of a flat web strap that encircles all of the loops and acts as a cinch.

**sling leg** individual tension member of the sling set.

**sling load** consists of supplies or equipment properly rigged with either one or more slings, cargo bags, or cargo nets.

**sling-to-clevis attachment** connecting a flat web nylon strap to a lift provision by means of inserting a clevis through the loop on the end of the strap and attaching the clevis to the provision.

**spreader bar** device which prevents the sling legs from bearing against the load which could cause damage.

**starboard side** right-hand side looking forward.

**static electricity** electrical charge produced and stored in the helicopter fuselage while in flight.

**static wand person** member of the ground crew responsible for discharging the static electricity from the helicopter.

**supported unit** unit requesting the mission to transport supplies and equipment.

**swage stops** short lengths of metal tubing crimped on the pallet sling cables.

**"T"-light pattern** five lights placed on the ground in the shape of a "T" used to identify a landing point.

**tandem load** sling load comprised of two pieces of equipment joined together, such as a prime mover and a howitzer.

**tensioner** locking device on the pallet sling cables used to adjust the overall length of the cable.

**tensioner stirrup** the fixed body of the pallet sling tensioner.

**tie-down provision** an integral part of the equipment commonly called a lug, eye, shackle, or ring that provides a means of attaching a hook, strap, or cable to restrain equipment during shipment.

**tie-down strap** device consisting of a flat web nylon strap, hooks on one or both ends of the strap, and a ratchet device used to secure items.

**touchdown hover** helicopter landing with only part of the landing gear positioned on the ground.

**two-point link connector** device used to connect two ends of a flat web nylon strap together.

**Type III nylon cord** cord made with an outer casing and strength member filler cords.

**Type IV link connector** device used to connect two ends of a flat web nylon strap together.

**Type X nylon aerial delivery sling** sling consisting of two, three, or four consecutive loops of Type X nylon webbing.

**Type XXVI nylon multi-loop line** sling consisting of two or more consecutive loops of Type XXVI nylon webbing.

**vertical hitch attachment** (see sling-to-clevis attach ment)

**vertical pendant** a high-strength sling or strap used to increase the clearance between the helicopter and the load.

**VERTREP** (vertical replenishment) resupplying ships by means of helicopter sling load.

**VOD** (vertical onboard delivery) using helicopter sling load capability to deliver cargo and equipment to ships.

**V-shaped approach path** the area within a designated area or sector measured outward from the center of the landing point.

**web ring** the apex fitting of the 15,000-pound capacity multileg sling set.

**web ring connector bar** metal connecting link that joins the two ends of the web ring strap on the 15,000-

pound capacity multileg sling.

**web ring strap** nylon web loop that forms the web ring on the 15,000-pound capacity multileg sling.

**whiteout** loss of orientation with respect to the horizon caused by sun reflecting on the snow and over cast sky.

**windchill factor** the cooling effect of moving air.

**“Y"-light pattern** four lights placed on the ground in the shape of a “Y” used to identify a landing point.

# REFERENCES

## REQUIRED PUBLICATIONS

Required publications are sources that users must read in order to understand or to comply with this publication.

**JOINT CHIEFS OF STAFF (JCS) PUBLICATION**

JOINT PUB 1-02 Department of Defense Dictionary of Military and Associated Terms. March 1994.

**MULTISERVICE PUBLICATION**

AFJMAN 24-204/TM 38-250/NAVSUP PUB 505/MCO P 4030.19F/DLAM 4145.3
Packaging and Materials Handling: Preparing Hazardous Materials for Military Air Shipment. November 1994.

FM 55-450-4/FMFRP 5-31 Vol II/NWP 42-1, Vol II/AFR 50-16, VOL II/COMDTINST M13482.3
Multiservice Helicopter External Air Transport: Single-Point Load Rigging Procedures. February 1991.

FM 55-450-5/FMFRP 5-31 Vol III/NWP 42-1, Vol III/AFR 50-16, VOL III/COMDTINST M13482.4
Multiservice Helicopter External Air Transport: Dual-Point Load Rigging Procedures. February 1991.

**DEPARTMENT OF THE ARMY**

| | |
|---|---|
| AR 310-25 | Dictionary of United States Army Terms. October 1983. |
| AR 310-50 | Authorized Abbreviations and Brevity Codes. November 1985. |
| FM 55-40 | Army Combat Service Support Air Transport Operations |
| FM 57-38 | Pathfinder Operations. April 1993. |
| TB 43-0142 | Safety Inspection and Testing of Lifting Devices. August 1993. |
| TM 10-1670-295-23&P | Unit and Direct Support (DS) Maintenance Manual (Including Repair Parts and Special Tools List) for 10,000 LB External Transport Sling Assembly, 25,000 LB External Transport Sling Assembly, 5,000 LB External Transport Cargo Net, 10,000 LB External Transport Cargo Net. May 1991. |
| TM 10-1670-298-20&P | Unit Maintenance Manual Including Repair Parts and Special Tools List for Container Delivery System. September 1995. |

**DEPARTMENT OF THE AIR FORCE**

| | |
|---|---|
| AFSOC 55-18 | Air Force Special Operations Command (AFSOC) Helicopter Operations Procedures |

**UNITED STATES MARINE CORPS**

| | |
|---|---|
| FMFM 4-3 | Landing Support. January 1994. |
| FMFM 6-21 | Tactical Fundamentals of Helicopterborne Operations. June 1996. |

**DEPARTMENT OF THE NAVY**

| | |
|---|---|
| FMFM 4-1 | Combat Service Support Operations. July 1993. |
| NAVAIR 00-80T-106 | LHA/LPH NATOPS MANUAL |
| NWP-55-9-ASH | Marine Corps Assault Support Helicopter Manual |
| TM 3940-15/1 | Operations and Maintenance, Sling, Multileg, Helicopter External Lift, 40,000-Pound Capacity |
| NWP 14 | Replenishment at Sea |
| NWP 42 | Shipboard Helicopter Operating Procedures |

| | |
|---|---|
| MC04855.10 | Marine Corps Quality Deficiency Reporting Procedures |
| NAVSEA 59750-AA-MMA-010 | |
| NAVSEA 59751-AA-MMA-010 | Underway Weapon Replenishment Ordnance Handling Equipment and Transfer Units |

**US COAST GUARD**

| | |
|---|---|
| COMDTINST M 3710.1 | US Coast Guard Air Operations Manual |
| COMDTINST M 3710.2 | Shipboard - Helicopter Operational Procedures |

**STANDARDIZATION AGREEMENT (STANAG)***

2949 - Technical Criteria for External Cargo Carrying Slings. June 1993.
2950 - Technical Criteria for External Cargo Carrying Nets. May 1988.
3117 - Aircraft Marshalling Signals. October 1985.
3542 - Technical Criteria for the Transport of Cargo by Helicopter. June 1993.

**RELATED PUBLICATIONS**

*Related publications are sources of additional information. They are not required in order to understand this publication.

**MULTISERVICE PUBLICATION**

FM 1-513/TO 00-80C-3 Battlefield Recovery and Evacuation of Aircraft. May 1993.

**DEPARTMENT OF THE ARMY**

Aviation:

| | |
|---|---|
| AR 95-3 | General Provisions, Training, Standardization, and Resource Management. September 1990. |
| DA Pam 738-750 | Functional Users Manual for The Army Maintenance Management System (TAMMS)> August 1994. |
| FM 1-400 | Aviator's Handbook. May 1983. |
| FM 55-15 | Transportation Reference Data. January 1986. |
| FM 55-450-2 | Army Helicopter Internal Load Operations. June 1992. |
| FM 101-10-1/1 | Staff Officers Field Manual Organizational, Technical, and Logistical Data (Volume 1). October 1987. |

*Source of procurement: STANAGs are available for DOD users from Naval Publications and Forms Center, 5801 Tabor Avenue, Philadelphia, Pennsylvania 19120. (DD Form 1425 may be used to requisition documents.)

For information on external sling loading of nuclear weapons, refer to:

FM 55-204 Air Transport Procedures for Transport of M454 Atomic Projectile by US Army Aircraft Transport of M454 Atomic Projectile Complete Mission Loads by US Army CH-47 Helicopter. November 1990.

FM 55-218 Air Transport Procedures: Transport of 8-inch Atomic Projectile, M422Al, by USA Helicopters Transport of 8-inch Atomic Projectile, M422Al, Mission Loads by USA CH-47 Helicopters. June 1988.

FM 55-220 Air Transport Procedures: Transport of M753 Nuclear Projectile by US Army CH-47 Helicopters: Transport of M753 Nuclear Projectile Complete Mission Loads by Us Army CH-47 Helicopters. February 1990.

FM 55-375 Air Transport Procedures: Transport of Pershing Warhead Section in Shipping and Storage Container, M483, by US Army Helicopters. March 1984.

FM 55-384 Air Transport Procedures: Transport of W84 Nuclear Warhead in HI408 Container by US Army CH-47 Helicopter. April 1986.

FM 55-386 Air Transport Procedures: Transport of Pershing II Warhead Section in Shipping and Storage Container, M620 by US Army Helicopters. July 1983.

FM 55-700 Air Transport Procedures Transport of SPARTAN Warhead Section in Shipping and Storage Container, XM553 by CH-47 Helicopter. January 1975.

**DEPARTMENT OF THE NAVY**

NAVAIR 01-23OHM-75 Nuclear Cargo Loading Manual Navy Model H-53 Aircraft

NAVAIR 01-25OHM-75 Nuclear Cargo Loading Manual Navy Model CH-46 Aircraft

# SLING LOAD INSPECTION RECORD

For use of this form, see FM 10-450-3; the proponent agency is TRADOC

| 1. SUPPORTED UNIT | 2. ITEM DESCRIPTION AND SERIAL/BUMPER NO. | 3. WEIGHT |
|---|---|---|
| | | |

| 4. SUPPORTING AVIATION UNIT | 5. TYPE AIRCRAFT | 6. RIGGED IAW FM NO |
|---|---|---|
| | | |

| **INITIAL ONLY ITEMS APPLICABLE TO YOUR SPECIFIC LOAD** | LOAD RIGGED BY | LOAD INSPECTED BY |
|---|---|---|
| **7. VEHICLE OR LOAD** | | |
| A. CORRECTLY POSITIONED | | |
| B. EMERGENCY BRAKE SERVICEABLE AND SET | | |
| C. FUEL LEVEL NOT TO EXCEED 3/4 TANK | | |
| D. PREPARED AND PADDED IAW THE APPROPRIATE FM | | |
| **8. SLING SET** | | |
| A. CORRECT NUMBER AND SIZE (10K OR 25K) | | |
| B. INSPECTED FOR SERVICEABILITY IAW FM 10-450-3 | | |
| C. SLING LEGS PROPERLY ROUTED AND ATTACHED TO LIFT POIN | | |
| D. CORRECT LINK COUNT FRONT AND REAR | | |
| E. CHAIN SECURED IN GRAB LINK | | |
| F. EXCESS CHAIN TIED OR TAPED (10 LINKS OR MORE) | | |
| G. BREAKAWAY TIES INSTALLED | | |
| H. APEX ATTACHED | | |
| I. APEX SPACER INSTALLED IF REQUIRED | | |
| J. REACH PENDANT INSTALLED IF REQUIRED | | |
| **9. A-22 CARGO BAG** | | |
| A. INSPECTED FOR SERVICEABILITY IAW FM 10-450-3 | | |
| B. RIGGED IAW FM 10-450-3 | | |
| C. SUSPENSION WEBS ATTACHED TO CONTAINER AND TAPED | | |
| D. CLEVIS BOLT THROUGH SUSPENSION WEB D-RINGS (4 EACH) | | |
| E. CORRECT SLING LEG ATTACHED | | |
| F. APEX ATTACHED (CORRECT TYPE) | | |
| G. APEX SPACER INSTALLED IF REQUIRED | | |
| **10. CARGO NETS** | | |
| A. CORRECT SIZE (5K OR 10K) | | |
| B. INSPECTED FOR SERVICEABILITY IAW FM 10-450-3 | | |
| C. LOAD CORRECTLY POSITIONED | | |
| D. LIFTING LEGS PROPERLY CONNECTED TO APEX FITTING | | |
| E. HOOKS TAPED | | |
| F. LIFTING LEGS TAPED OR TIED (BREAKAWAY) | | |
| G. CORRECT NUMBER AND SIZE SLING LEGS | | |

**REMARKS:**

**11. LOAD RIGGED BY:**

| UNIT (PRINT) | NAME (PRINT) | INITIALS | RANK |
|---|---|---|---|
| | | | |

| SIGNATURE | DATE |
|---|---|
| | |

**12. LOAD INSPECTED BY:**

| UNIT (PRINT) | NAME (PRINT) | INITIALS | RANK |
|---|---|---|---|
| | | | |

| SIGNATURE | DATE |
|---|---|
| | |

**DA FORM 7382-R, MAR 97**