FM 4-20.199 (FM 10-450-5)
MCRP 4-11.3E, VOL III
NTTP 3-04.13
AFMAN 11-223 (I), VOL III
COMDINST M13482.4B

Multiservice Helicopter Sling Load:

Dual-Point Load Rigging Procedures

February 2009

DISTRIBUTION RESTRICTION. Approved for public release; distribution is unlimited.

Headquarters
Department of the Army
United States Marine Corps
Department of the Navy
Department of the Air Force
United States Coast Guard

This publication is available at
Army Knowledge Online (www.us.army.mil) and
General Dennis J. Reimer Training and Doctrine
Digital Library at (www.train.army.mil).

*FM 4-20.199 (FM 10-450-5)/MCRP 4-11.3E, VOL III/NTTP 3-04.13/ AFMAN 11-223 (I), VOL III/COMDTINST M13482.4B

Field Manual
No. 4-20.199 (10-450-5)

Headquarters, Department of the Army
Washington, DC

Marine Corps Reference Publication
No. 4-11.3E, Vol III

United States Marine Corps

Navy Tactics, Techniques, and Procedures
No. 3-04.13

Department of the Navy

Air Force Manual
No. 11-223 (I), Vol III

Department of the Air Force

Commandant Instruction
No. M13482.4B

United States Coast Guard

20 February 2009

Multiservice Helicopter Sling Load: Dual-Point Load Rigging Procedures

Contents

Page

PREFACE ..... **ix**

Chapter 1 FUNDAMENTAL PRINCIPLES OF SLING LOAD **1-1**
Introduction 1-1
Classification Definitions of Sling Load 1-1
Certification of Equipment for Helicopter Sling Load 1-2
Requests for Sling Load Certification 1-2
Unique Items of Equipment or Operational Requirements 1-3
Equipment Rigging Procedures 1-3
General Rigging Instructions 1-4

Chapter 2 CERTIFIED DUAL-POINT RIGGING PROCEDURES FOR WHEELED VEHICLES **2-1**
M996/M997/M997A1/M997A2 Truck, Ambulance, (HMMWV) 2-1

Distribution Restriction: Approved for public release; distribution is unlimited

***This publication supersedes FM. 10-450-5/MCRP 4-23E, Vol III/NWP 3-04.13/AFMAN 11-223, Vol III/ COMDINST M13482.4A, 30 August 1999**

MARINE CORPS PCN: 144 000072 00

M966/M1036/M1045/M1045A2/M1046 TOW Missile Carrier (HMMWV)M1025/M1025A2/M1026/M1043/M1043A2/M1043A2 with Marine Armor Kit (MAK)(USMC)/M1044/M1151 Armament Carrier (HMMWV)/M1114 Up-Armored HMMWV 2-4
M998/M1123 with Marine Armor Kit (MAK) (USMC)/M1037 Modified (GVW 9,400 lbs)/M1038/M1097/M1097A1/ M1097A2/M1152 Truck, Cargo, 1 1/4-ton (HMMWV) 2-6
M1037 Shelter Carrier (HMMWV) with S-250 or S-250E Shelter 2-10
M1097 Shelter Carrier, Heavy HMMWV, with S-250 or S-250E Shelter 2-13
M1037/M1042 Shelter Carrier (HMMWV) with Lightweight Multipurpose Shelter (LMS) 2-15
M1097/M1097A2 Shelter Carrier (HMMWV) with Lightweight Multipurpose Shelter (LMS) (USMC) 2-16
M1097/M1097A2 Shelter Carrier (HMMWV) with Lightweight Multipurpose Shelter (LMS) using Shelter Lift Rings as Sling Guides 2-19
M1113 Truck, Utility, Expanded Capacity (HMMWV) with Lightweight Multipurpose Shelter (LMS) using Shelter Lift Rings as Sling Guides 2-22
M1097/M1113 Shelter Carrier (HMMWV) with Gitchner Model 1497A Shelter 2-24
M1097A2 Shelter Carrier (HMMWV) with Special Operations Media System (SOMS-B) in S-788G Shelter (LMS) 2-27
M1097A1 (HMMWV) with Tactical Data Network (TDN)- Gateway (USMC) ... 2-29
M1037/M1097 Shelter Carrier (HMMWV) with G15840 Smoke Generator Set, M157/M157A1E1 2-31
M1113 (HMMWV) with M56 Smoke Generating System 2-33
Dual M56 Smoke Generating Systems on M1113 HMMWV, Side by Side (Shotgun Method) 2-36
Dual HMMWV, Side by Side (Shotgun Method) 2-39
M1097A1 (H-HMMWV) with Fiberglass Cargo Bed Cover (CBC) 2-43
M998 Truck, Cargo, 1 1/4-Ton (HMMWV) with AMTECH Helmet Hardtop 2-46
Dual HMMWV, Side by Side (Shotgun Method), with AMTECH Helmet Hardtop Basic 2-48
Helmet Hardtop (AMTECH) Cargo Bed Cover on M1097A2 HMMWV 2-52
Prophet AN/MLQ-40(V) on M1097 HMMWV 2-54
M1097 (HMMWV) with Contact Maintenance Truck, Heavy (CMTH) 2-56
M1098 HMMWV with Remote Landing Site Tower (RLST) 2-58
M1097 (HMMWV) with High Mobility Digital Group Multiplexer (DGM) Auxiliary Equipment Transportation Container (AETC) in 2 and 3 Mast Configurations 2-60
M1097A2 (H-HMMWV) with the Secure Mobile Anti-Jam RELIABLE Tactical Terminal (SMART-T) 2-62
Trojan Spirit Lite (V)2 Central Communications, AN/TSQ-226 (V)2 on M1113 HMMWV 2-64
Tactical Super High Frequency (SHF) Satellite Terminal (TSST) on M1113 HMMWV 2-66
Tactical Super Satellite Terminal (TSST) Mobile Power Unit (MPU) on M1113 HMMWV 2-68
AN/MRC-142B Radio Terminal Set with 30M Mast on M998 HMMWV 2-70
M998 (HMMWV) with Two MRC-127 Stacks 2-72
M998/M1038 (HMMWV) with Lightweight Tactical Fire Control Systems (LTACFIRE)/Tactical Terminal Control Systems (TTCS) 2-74

M1097A2 (HMMWV) with Advanced Field Artillery Tactical Data System (AFATDS) Full Size or Partial Soft Top Installation Kit (STIK) 2-76
M1037 (HMMWV) with AN/TPQ-36 Firefinder Generator Pallet 2-78
M998 HMMWV with Man Portable Air Defense Systems (MANPADS) 2-80
M1097 (H-HMMWV) with AN/TPQ-42, Meteorological Hydrogen Generator (MHG) 2-81
M1037 (H-HMMWV) with Compressed Air-Foam System, Mobile (CAFSM) .. 2-83
M1113 (HMWWV) with Petroleum Quality Analysis System (PQAS) Shelter . 2-85
M1123 Cargo/Troop Carrier (HMMWV) with Marine Armor Kit, Fully Armored Troop Section (USMC) 2-87
Interim Fast Attack Vehicle Truck (IFAV), Long Wheel Base 2-89
Interim Fast Attack Vehicle Truck (IFAV), Long Wheel Base, Side by Side (Shotgun) 2-90
Medium Tactical Vehicles M1083/M1083A1/M1084/M1085/ M1086/M1090/M1090A1/M1093/M1094 2-93
Light Medium Tactical Vehicles (LMTV) M1078/M1078A1/ M1079A1/M1081 2-96
Light Medium Tactical Vehicles (LMTV) M1078/M1078A1/ M1081 with Type III Cargo Bed Cover and Medium Tactical Vehicles (MTV) M1083/M1083A1/M1093 with Type IV Cargo Bed Cover 2-99
Medium Tactical Vehicle, Tractor, M1088/M1088A1 2-103
Truck, Cargo, 5-Ton, M813A1/M923/M925 2-105
Truck, Cargo, 2 1/2-Ton, M35A2 Modified, Part of an AN/MPQ-49A Forward Area Alerting Radar (FAAR) System 2-107
M35A3 2 1/2-Ton Cargo Truck 2-109
Medium Tactical Vehicle Replacement (MTVR) (USMC) 2-111
Front Power Unit, MK48 2-113
Light Armored Vehicle (LAV) (USMC) 2-115

Chapter 3 CERTIFIED DUAL-POINT RIGGING PROCEDURES FOR TRAILERS 3-1
Introduction 3-1
M101A2 3/4-Ton Trailer 3-1
M1048 Trailer with Tracked Suspension System (TSS) 3-3
M989 Heavy-Expanded Mobility Ammunition Trailer (HEMAT) 3-5
M989A1 Heavy-Expanded Mobility Ammunition Trailer (HEMAT II) 3-7
Mk14 Trailer, Container Hauler 3-9
Mk15 Trailer, Wrecker/Recovery 3-11
Mk16 Trailer, Fifth-Wheel Adapter 3-13
Mk17 Trailer, Drop Side, Cargo 3-15
M871A1 Semitrailer 3-17
High Mobility Trailers (HMT), M1101/M1102 3-19
High Mobility Trailers (HMT) with Generator for Joint Surveillance Target Attack Radar (JSTAR) SystemS 3-21
High Mobility Trailer-Light (HMT), M1101 with AN/TSQ-198, Tactical Terminal Control System (TTCS) 3-23
Special Operations Media Systems (SOMS B) on Commander's Crash-Out-Package System (COPS) Trailer 3-25
Deployable Print Production Center (DPPC) on COPS Trailer 3-27
M1112 400 Gallon Water Trailer 3-29
M105A3 Trailer 3-31

M1082 Light Medium Tactical Vehicle (LMTV) and M1095 Medium Tactical Vehicle (MTV) Trailers 3-33
Assault Command Post With High Mobility Wheel Set 3-35
Containerized Kitchen Mounted on the Containerized Kitchen Trailer 3-37
M31 Expeditionary Arresting Gear System (EAGS) 3-39
Standard Automotive Tools Set (SATS) Trailer 3-41
Small Emplacement Excavator (SEE) Transporter 3-42
Standard Automotive Tools Set (SATS) Mounted on Sats Trailer 3-44
M817A3 Semi-Trailer 3-46

Chapter 4 CERTIFIED DUAL-POINT RIGGING PROCEDURES FOR TRAILERS WITH MOUNTED GENERATORS 4-1
Introduction 4-1
M116A2 Trailer-Mounted Power Units, Generators, and Power Plants 4-1
M353 Trailer Chassis with Mounted Generators 4-3
M200A1 Trailer-Mounted Power Units, Generators, and Power Plants 4-5
High Mobility Trailer with AN/MJQ-35A Power Unit 4-7
Aviation Ground Power Unit 4-9

Chapter 5 CERTIFIED DUAL-POINT RIGGING PROCEDURES FOR TANDEM LOADS 5-1
Introduction 5-1
M998/M1038 Truck, Utility, 1-1/4 Ton (HMMWV) with M101A1/A2 Trailer, Cargo 5-1
M1037 Shelter Carrier (HMMWV) with M101A2 Trailer, Cargo 5-4
M1037 Shelter Carrier (HMMWV) with S-250/S-250E Shelter and M116A2 Trailer Mounted Generators, PU-751/PU753/PU-620/M 5-7
M998/M1038 Truck, Utility, 1-1/4 Ton (HMMWV) and G-85/TPQ-36 (V)7 Generator Group on M116A2 Modified Trailer 5-11
M1097 Truck, Utility, 1-1/4 Ton (HMMWV) with Pallet Group OA-9134/TSC, Antenna AS-3036/TSC and PU-753 Generator Set on M116A2 Trailer 5-14
M1097 Shelter Carrier, 1-1/4 Ton (HMMWV) with AN/TPQ-36 (V) 7, (S-250 Shelter), Operations Control Group and Radar Set Antenna Mounted on M116A2 Trailer 5-17
M1097, 1-1/4 Ton (HMMWV) with Generator Pallet Group, G-86-TPQ-36 (V)7, and Radar Set Antenna Mounted on M116A2 Trailer 5-20
M1037 Shelter Carrier, 1-1/4 Ton (HMMWV) with AN/TPQ-36, (S-250 Shelter), Operations Control Group and Radar Set Antenna Mounted on M103A1 Trailer 5-23
M1097 Shelter Carrier (HMMWV) with S-250 Shelter and Trailer Generator Sets on M116A2 Trailer 5-26
M1097 (HMMWV) with AN/TSQ-183, Counter Battery Radar and MEP802A Generator on M116A3 Trailer 5-29
M1097 (HMMWV) with AN/TSQ-183, Counter Battery Radar and M101A2 Trailer 5-31
Joint Surveillance Target Attack Radar (JSTAR) System, with LMS Shelter and Mission Trailer, HMT with Generator 5-34
M1097 Shelter Carrier, 1-1/4 Ton (HMMWV) with AN/TPQ-36(V)7, (S-250 Shelter), Operations Control Group, OKG-398/TPW, and M116A2 Equipment Trailer Group 5-37
M1097A2 (HMMWV) with Advanced Field Artillery Tactical Data System (AFATDS) Full Size Soft Top Installation Kit (STIK) and M101A1 Trailer 5-39

M1097 (HMMWV) and High Mobility Trailer (HMT) 5-42
M1113 (HMMWV) with LMS Shelter and High Mobility Trailer (HMT)..... 5-44
JSTAR Common Ground Station (CGS) Support Vehicle, M1097 HMMWV and M1102 High Mobility Trailer..... 5-49
M1097 Truck, Utility, 1 1/4-Ton (HMMWV) with AN/MPQ-64 Tactical Quiet Generator (TQG) and High Mobility Trailer (HMT) with Sentinel Antenna Transceiver Group (ATG)..... 5-52
M1097, 1-1/4 Ton (HMMWV) with Generator Pallet Group and PU 799 G-85/TPQ-36 Generator Group on M116A3 Trailer..... 5-55
M1113 Shelter Carrier (HMMWV) with LMS Shelter and PU-798 Generator on M116A3 Trailer..... 5-57
M1097A2 Shelter Carrier (HMMWV) with LMS Shelter Using Shelter Lift Rings as Sling Guides and PU-798 Generator on M116A3 Trailer 5-60
M1113 Shelter Carrier (HMMWV) with LMS Shelter Using Shelter Lift Rings as Sling Guides and PU-798 Generator on M116A3 Trailer..... 5-63
M1097A2 Shelter Carrier (HMMWV) with S-250 Shelter and Trailer Generator Sets on M116A3 Trailer 5-66
M1097A2 (HMMWV) with Advanced Field Artillery Tactical Data System (AFATDS) Soft Top Installation Kit (STIK) and PU-797 Generator Set on M116A3 Trailer..... 5-68
M1097 (HMMWV) with Meteorological Measuring Set in LMS Shelter and AN/MJQ-35 Power Plant on M116A3 Trailer 5-71
M1113 (HMMWV) with LMS Shelter and Shadow Tactical Unmanned Aerial Vehicle (TUAV) Launch Recovery Trailer 5-74
M998/M1038 1 1/4-Ton Cargo Truck (HMMWV) and M102, 105-mm Howitzer..... 5-77
M1037/M1097 Truck, Utility, 1 1/4-Ton (HMMWV) and M119, 105-mm Howitzer..... 5-80
M1025A2 Truck, 1 1/4-Ton (HMMWV) with Line of Sight Anti-Tank (LOSAT) Reloader Crane and High Mobility Resupply Trailer (HMT)..... 5-83
M1113 Truck, 1 1/4-Ton (HMMWV) with Line of Sight Anti-Tank (LOSAT) Fire Unit and High Mobility Resupply Trailer (HMT)..... 5-86
M1113 Truck, 1 1/4-Ton (HMMWV) with M56 Smoke Generator and M101A2 Trailer..... 5-88
M1113 Truck, 1 1/4-Ton (HMMWV) Petroleum Quality Analysis System (PQAS) Shelter and PQAS Trailer 5-91

Chapter 6 CERTIFIED DUAL-POINT RIGGING PROCEDURES FOR HOWITZERS AND WEAPONS SYSTEMS..... 6-1
Introduction..... 6-1
M101A1 Howitzer, 105-mm, with or without A-22 Cargo Bags..... 6-1
Two M101A1 Howitzers, 105-mm, Side by Side (USMC)..... 6-4
M102 Howitzer, 105-mm 6-6
Two M102 Howitzers, 105-mm, with or without One, Two, or Three A-22 Cargo Bags..... 6-7
Two M119A2 Howitzers, 105-mm, Forward Firing Position, Side by Side 6-10
M198 Howitzer, 155-mm, Towed with External Airlift Travel Lock Assembly .. 6-13
M777/M777A1/M777A2, 155-mm Lightweight Howitzer..... 6-15

Chapter 7 CERTIFIED DUAL-POINT RIGGING PROCEDURES FOR MISSILE SYSTEMS 7-1
Introduction 7-1
Avenger 7-1
Avenger on M1097/M1097A1/M1097A2 with ECU and PPU with or without Bustle Box Stowed on Roof 7-3
M1113 Truck, 1 1/4-Ton (HMMWV) with Line of Sight Anti-Tank (LOSAT) Fire Unit with Reloader Crane and Four Missiles 7-6
M1097A2 Truck, 1 1/4-Ton (HMMWV) with Complementary Low Altitude Weapons System (CLAWS) 7-8
AN/MPQ-57 and AN/MPQ-61 High-Power Illuminator Radar (HIPIR) Phase II and Phase III Mounted on the M390 (Modified) Trailer 7-10
Platoon Support Van/Maintenance Center (PSV/MC) 7-12
Field Maintenance Equipment Shop (FME) 7-14
Field Maintenance Equipment Shop 21, Unmanned Shop, Electrical Equipment 7-16
Platoon Command Post (PCP)/Battery Command Post (BCP) 7-17

Chapter 8 CERTIFIED DUAL-POINT RIGGING PROCEDURES FOR ENGINEER EQUIPMENT 8-1
Introduction 8-1
D5B Tractor Dozer, Sectionalized 8-1
Tractor Full Tracked, Case Model 1150 8-3
Tractor Full Tracked, Case Model 1150E 8-5
Tractor (Dozer), Full Tracked, Type III, JD 450G 8-7
IC45 Crawler Carrier 8-9
Tractor, Wheeled, Industrial, Case Model 580 8-11
420-D Backhoe Loader 8-13
Small Emplacement Excavator (SEE) 8-15
High Mobility Materiel Handler (HMMH) 8-17
950BS Scoop Loader, Sectionalized 8-19
130GS Grader, Sectionalized 8-22
613BS Scraper, Elevating, Sectionalized 8-24
613WDS Water Distributor, Sectionalized 8-26
Roller, Towed, Vibrating 8-28
Rollers, Towed 8-29
Vibrating Roller, Caterpillar, RO-33 8-31
Roller, Compactor, Vibrator 8-33
Mine Clearing Line Charge Mounted on M353 Trailer 8-35
Mine Clearing Line Charge Mounted on M200A1 Trailer 8-37
LRT-110, 7 ½-Ton Crane 8-39
LRT-110, 7 ½-Ton Crane Boom 8-40
LRT-110, 7 ½-Ton Crane Power Unit 8-42
SP-7 Wheel-Mounted Crane 8-44
Truck Forklift, MC-4000 8-45
Truck Forklift, RT-4000 8-47
Truck Forklift, MC-6000 8-49

Extendable Boom Forklift (USMC) 8-50
Extendable Boom Forklift (EBFL) (New Version) (USMC)..... 8-52
Light Rough Terrain Forklift (LRTF) (USMC) 8-54
Boat, Bridge, Erection..... 8-56
Ribbon Bridge Erection Boat, MK2..... 8-58
Ribbon Bridge Interior Bay 8-59
Ribbon Bridge Ramp Bay..... 8-61
Medium Girder Bridge (MGB) (USMC) 8-63
Dry Support Bridge on M1077 Flatrack..... 8-64
SRS-106 Integrated Tower Systems Portable Tower Trailer (PTT) 8-67
M4 Robotic Mine Flail..... 8-68
Pneumatic Tool and Compressor Outfit/Hydraulic Pioneer Tool Outfit (PTO) on M353 Trailer 8-70
Water Purification Unit, Reverse Osmosis (ROWPU)..... 8-72
Water Purification Unit, Reverse Osmosis (ROWPU), Trailer Mounted 8-74
Inland Petroleum Distribution System (IPDS), Mainline Pump on 20-Foot Flatrack..... 8-76

Chapter 9 CERTIFIED DUAL-POINT RIGGING PROCEDURES FOR LIQUID CONTAINERS 9-1
Introduction..... 9-1
Two Storage Modules, Fuel/Water (Side by Side)..... 9-1
Three Storage Modules, Fuel/Water (Side by Side) 9-3
Five 500-Gallon Fuel Drums 9-7
Load Handling System-Compatible Water Tank Rack System (LHS-CWTRS) 9-9

Chapter 10 CERTIFIED DUAL-POINT RIGGING PROCEDURES FOR SHELTERS..... 10-1
Introduction..... 10-1
Communication or Electronic Systems Housed in S-250 Shelters 10-1
Communication or Electronic Systems Housed in Lightweight Multipurpose Shelters (LMS)..... 10-3
Communication or Electronic Systems Housed in S-280 Shelters 10-4
8- x 8- x 10-Foot Shelters..... 10-7
8- x 8- x 20-Foot Shelters..... 10-9
AN/TYC-5A Data Communications Terminal..... 10-13
Shelter, Knockdown, 8- x 8- x 20-Foot..... 10-14
Jam-Resistant Secure Communications (JRSC) Satellite Communications Terminal with Mobilizer..... 10-16
Downsized Digital Group Multiplexer (DGM) Assemblages..... 10-18
NATO Airbase Satcom (NABS) Shelter Pallet, AN/TSC-93B (V) 2 10-20
Trojan Air Transportable Electronic Reconnaissance System (TATERS) High Gain Antenna Group (HGAG) Shelter..... 10-22
Digital Tech Controller (DTC) Housed in a Modified Gitchner Shelter..... 10-24

Chapter 11 CERTIFIED DUAL-POINT RIGGING PROCEDURES FOR CONTAINERS .. 11-1
Introduction..... 11-1
Full-Up Power Pack (FUPP) Container, M1A1 11-1
Tandem Lift of Two ISU-90 Shipping/Storage Containers..... 11-3
Authorized Stockage List Mobility System (ASLMS), 12-Foot Section..... 11-5
Authorized Stockage List Mobility System (ASLMS), 8- and 12-Foot Sections Connected 11-7

Quadcons 11-9
Launch Pod Container (LPC) with Multiple Launch Rocket System (MLRS) Rockets or Guided Multiple Launch Rocket System (G-MLRS) Rockets / Guided Missile Launch Assembly (GMLA)Pods with Army Tactical Missile System (ATACMS) Missiles, Two Containers 11-10
Launch Pod Container (LPC) with Multiple Launch Rocket System (MLRS) Rockets or Guided Multiple Launch Rocket System (G-MLRS) Rockets / Guided Missile Launch Assembly (GMLA)Pods with Army Tactical Missile System (ATACMS) Missiles, Four Containers 11-13

Chapter 12 CERTIFIED DUAL-POINT RIGGING PROCEDURES FOR RADAR AND SATELLITE EQUIPMENT 12-1
Introduction 12-1
OE-361/G Quick Reaction Satellite Antenna 12-1
NATO Air Base SATCOM (NABS) Power Pallet, AN/TSC-85B (V)2 12-3
Digital Group Multiplexer (DGM) Digital Antenna Mast Program (DAMP) Pallet Trailer 12-5
Lightweight Generator Frame Assembly (AN/TSC-93B Reconfiguration), Satellite Communications Terminal 12-7

Chapter 13 CERTIFIED DUAL-POINT RIGGING PROCEDURES FOR MISCELLANEOUS EQUIPMENT 13-1
Introduction 13-1
Palletized Loading System (PLS), M1077 Flatrack, Loaded 13-1
Palletized Loading System (PLS), M1077 Flatrack, Empty 13-3
Enhanced Palletized Loading System, Flatrack, Loaded 13-5
Enhanced Palletized Loading System, Flatrack, Empty 13-7
Container Roll-In/Out Platform (CROP), Loaded 13-8
Container Roll-In/Out Platform (CROP), Empty, Stacked 13-10
Naval Special Warfare Rigid Inflatable Boat (NSWRIB) with or without Trailer 13-11
Special Operations Craft-Riverine (SOC-R) and Naval Special Warfare Rigid Inflatable Boat (NSWRIB) Trailer 13-14
Special Operations Craft-Riverine (SOC-R) 13-15
Special Operations Craft-Riverine (SOC-R) with SOC-R Trailer 13-17
35-Foot Riverine Assault Craft (RAC) with or without Trailer 13-19
Small Unit Riverine Craft (SURC) with Trailer 13-20

Chapter 14 SUITABLE DUAL-POINT RIGGING PROCEDURES 14-1
Introduction 14-1
M35A1/A2 2 ½-Ton Cargo Truck 14-1
M149-Series Water Trailer 14-3
M114A1 155-mm Howitzer 14-5
One Conex Container 14-6
One MILVAN Container 14-8

Appendix A NATIONAL STOCK NUMBERS FOR SLINGS, NETS, AND SPARE PARTS A-1
Appendix B SLING CONVERSION CHART B-1
Appendix C AIRSPEED FACTORS C-1
GLOSSARY Glossary-1
REFERENCES References-1
INDEX Index-1

Preface

SCOPE

This manual is one of a series of manuals for aviation and ground personnel who perform helicopter sling load missions ashore or aboard ship. Other manuals in this series are FM 4-20.197(FM 10-450-3)/MCRP 4-11.3E, VOL I/NWP 3-04.11/AFMAN (I) 11-223, VOL I/COMDTINST M13482.2B and FM 4-20.198/MCRP 4-11.3E, VOL II/NWP 3-04.12/AFMAN (I) 11-223, VOL II/COMDTINST M13482.3B.

These manuals are a coordinated effort of the US Army, US Marine Corps, US Navy, US Air Force, and US Coast Guard. All services participate in the sling load certification program begun by the Army in 1984. These manuals include standardized rigging procedures and other information from that program. Chapters 2 through 13 contain rigging procedures for dual-point loads which have been certified for sling load. Chapter 14 contains rigging procedures which have not been certified but have demonstrated acceptable static lift and flight characteristics during a flight test.

Efforts were made to standardize ground crew and hookup procedures and terminology. Where service-unique requirements apply to an entire chapter or body of text, the service initials are at the beginning of the chapter or text. Otherwise the initials are at the end of the applicable sentence.

Rigging equipment and procedures described in this manual may not be authorized for all aircraft or services because of equipment or service restrictions.

This publication applies to the Active Army, the Army National Guard (ARNG)/Army National Guard of the United States (ARNGUS), and the United States Army Reserve (USAR) unless otherwise stated.

USER INFORMATION

The proponent of this publication is the United States Army Training and Doctrine Command (TRADOC). Recommendations for changes or improvement to the manual are requested.

Army personnel submit DA Form 2028 (Recommended Changes to Publications and Blank Forms) to:

Aerial Delivery and Field Services Department
USA Quartermaster Center and School
ATTN: ADMMO
710 Adams Avenue
Fort Lee, VA 23801-1502

Navy personnel submit recommended changes to:
Commander
Navy Warfare Development Command
ATTN: N5
686 Cushing Road
Newport, RI 02841-1207

Marine Corps. Readers of this publication are encouraged to submit suggestions and changes through the Universal Need Statement (UNS) process. The UNS submission process is delineated in Marine Corps Order 3900.15A, *Marine Corps Expeditionary Force Development System*, which can be obtained from the Marine Corps Publications Electronic Library Online (universal reference locator: http://www.usmc.mil/directiv.nsf/web+orders). The UNS recommendation should include the following information:

- Location of change
  Publication number and title
  Current page number
  Paragraph number (if applicable)
  Line number
  Figure or table number (if applicable)

- Nature of change
  Addition/deletion of text
  Proposed new text

With a copy to:
Commanding General
Marine Corps Systems Command (PSE)
Quantico, VA 22134-5021

Air Force personnel submit AF Form 847 (Recommendation for Change of Publication) to:
HQ AFSOC/A3TW
Hurlburt Field, FL 32544-5273

Coast Guard personnel submit rapidraft letter (CG-3883) or AF Form 847 to:
Commandant (G-OCA)
US Coast Guard
2100 2nd Street SW
Washington, DC 20593

With a copy to:
Commander
Aviation Training Center (TRADIV)
Mobile, AL 36117

REQUEST FOR WAIVERS

Services should submit requests for waivers to their respective points of contact.

USA - Director, Aerial Delivery and Field Services Department, 710 Adams Avenue, Ft. Lee, VA 23801-1502

USMC -CG, MCCDC, Quantico, VA 22134-5021 with copy to CG, MARCORSYSCOM (PSE), Quantico, VA 2314-5021

USN - Naval Air Systems Command, AIR-4.3.5.4, Mechanical Systems Branch, External Loads Transport Systems, NAVAIR Lakehurst NJ 08733

USAF - Applicable major command (A3)

USCG - Cmdt (G-OCA), Washington, DC 20330

Chapter 1

Fundamental Principles of Sling Load

INTRODUCTION

1-1. This chapter contains general information about certification for helicopter sling load and explains the role of the Military Surface Deployment and Distribution Command Transportation Engineering Agency (SDDCTEA) and the Department of Defense (DOD) sling load certification authority. This authority rests with the US Army Natick Soldier Center (NSC). This chapter also explains the information contained in the equipment rigging procedures and gives some general rigging instructions.

CLASSIFICATION DEFINITIONS OF SLING LOAD

1-2. All sling loads are classified under one of the following definitions:

- **Certified Sling Loads.** Certified sling loads are those items of equipment and their associated rigging procedures which have completed the evaluation and testing required by the US Army Natick Soldier Center (NSC) for sling load certification. These rigging procedures are in Chapters 2 through 13. Only certified sling loads are authorized for the Marine Corps. The following restrictions apply for dual-point sling load certification to remain in effect:
  - The load must be within the lifting capability of the desired helicopter model and not exceed the rated capacity of the sling set being used.
  - The load shall be rigged in accordance with the certified dual-point rigging procedure. Failure to rig the load exactly as directed by the certified dual-point rigging procedure creates a unique load.
  - The maximum tested stable airspeed (straight and level flight determined during one flight test) specified for the load in the applicability section of the rigging procedure or in appendix C of this manual is a recommendation and not a restriction, unless so stated.
  - Changes or modifications to load characteristics (weight, model, national stock number (NSN), accompanying load, structure of items etc.) creates a unique load.
  - This certification does not apply to helicopters of different designations (for example, CH-47 verses CH-53E helicopter) because of possible differences in hook spacing, dynamic vibration, helicopter/load mass differential, and rotor wash pattern.

Note. When carrying loads at weights close to the aircraft hook limitations, close coordination with the aviation unit is required

---

- **Suitable Sling Loads.** Suitable sling loads are those items of equipment and their associated rigging procedures that have not been certified but have demonstrated acceptable static lift and flight characteristics during a flight test. In most cases these loads were not pull tested in accordance with MIL- STD-913, but are known loads which have been flown without incident for years and which NSC considers to be proven safe. These rigging procedures are in Chapter 14.
- **Unique Sling Loads.** Unique loads are equipment carried on a one time or low-frequency basis, such as telephone poles, artillery targets, or barrier material. The lack of sling load certification in itself does not preclude a commander from carrying a unique load. Due to the lack of rigging procedures, unique loads should be considered high risk loads. Each service is responsible for determining its policy on carrying unique loads. (USA) **The movement of unique loads**

should be approved by the high risk approving authority. The name and rank of the approving authority should be printed in the bottom right corner of the remarks block on DA Form 7382-R, *Sling Load Inspection Record.* Only the most experienced personnel should attempt to rig and inspect a unique load. When possible static lift the load prior to flight.

- **Prohibited Sling Loads.** Prohibited sling loads are items of equipment that are prohibited from sling loading as determined by each service. These loads have been denied sling load certification and are a safety hazard if carried. They have either structural deficiencies or have exhibited unstable flight characteristics during flight testing. Each service will identify these loads and transmit this information by separate list. Contact your service point of contact identified in the Preface if you have any questions regarding the classification of a particular load.

CERTIFICATION OF EQUIPMENT FOR HELICOPTER SLING LOAD

1-3. Certification for sling load assures the user that the item has met minimum standards.

- **Objective.** The objective of sling load certification is to assure the user that the equipment being transported can withstand the stresses of a sling load flight environment. Certification for sling load assures the user that the item has met minimum standards for structural integrity and that the associated rigging procedures have been developed specifically for that item.
- **Responsibilities.** Within the US Army, the SDDCTEA is responsible for transportability approval of developmental equipment. Within the DOD, NSC is the lead activity responsible for providing sling load certification and rigging procedures for military equipment. When an item is certified for sling load, it means that NSC, in cooperation with various test activities, has:
  - Conducted an engineering analysis of the load and lifting provisions for structural adequacy during sling loading.
  - Verified that the lift provisions meet the strength requirements of the applicable military standard by means of proof load testing.
  - Developed and/or validated sling load rigging procedures through static lift testing.
  - Evaluated flight reports and determined that the particular load meets acceptable flight characteristics with the type helicopter flown during the flight test.
  - Issued a statement of sling load certification for the particular load, including load configuration(s), weight(s), types of helicopter(s), and maximum tested stable airspeed (straight and level flight as attained during the one flight evaluation). Certification is valid only for the conditions specified in the rigging procedures.

REQUESTS FOR SLING LOAD CERTIFICATION

1-4. Each service headquarters must designate, request, and prioritize the fielded equipment to be evaluated by NSC for sling load certification. Individual units can request sling load certification for fielded equipment through the appropriate service agency which will add the item to the prioritized list. The NSC will evaluate the equipment on a priority basis. Dual-point loads cannot be certified for dual-point lift based on previously certified dual-point rigging procedures because of the difference in dual hook helicopters, such as the distance between the cargo hooks. Rigging procedures for dual-point loads must be developed and/or approved by NSC before the evaluation flight. The following agencies are responsible for their branch of service:

- **US Army** - Commander, Combined Arms Support Command, ATTN: QM Combat Developments, Suite 250, 3901 A Avenue, Fort Lee, VA 23801-1809.
- **US Marine Corps** - Commanding General, Marine Corps Systems Command (PSE) Quantico, VA 22134-5021.
- **US Navy -** Naval Air Systems Command (NAVAIR).
- **US Air Force -** US Air Force Material Command.

UNIQUE ITEMS OF EQUIPMENT OR OPERATIONAL REQUIREMENTS

1-5. Helicopter sling loading of unique items, due to operational requirements, will be at the discretion of the commander. Equipment not listed in this manual should be static lifted (when possible) by a crane to determine proper rigging and stability characteristics. Personnel thoroughly familiar with sling load rigging procedures should assist in the static lift testing. Flight evaluating may be conducted after a satisfactory static rigging configuration has been determined.

Note: Low density equipment with low weight and large surface area (flat surfaces), such as shelters, empty trailers, pallet loads, boat shaped items, and empty fuel or water drums, are likely to become extremely unstable when flown during sling load operations, even at low airspeeds, and should be flown with extreme caution.

EQUIPMENT RIGGING PROCEDURES

1-6. This section explains the information that is contained in the rigging procedures for each load. Chapters 2 through 13 contain the rigging procedures for certified dual-point loads and Chapter 14 contains the rigging procedures for suitable dual-point loads.

- **Applicability Paragraph.** The applicability paragraph states whether a load is "certified" or "suitable" for sling load and the types of helicopters. The maximum tested stable airspeed is listed in Appendix C. For certified loads, this airspeed is the maximum airspeed attained by the helicopter during the evaluation flight before the load became unstable or before the aircraft power requirements were exceeded. For suitable loads, the maximum recommended airspeed is based on previous experience with this helicopter/load combination. **For either certified or suitable loads, the airspeed listed is a recommendation and not a restriction, unless so stated. The aircrew should closely monitor the load during the flight, especially if the helicopter exceeds the recommended airspeed.**
- **Load Description.** The load description paragraph identifies the load, model, national stock number (NSN) or other identification, and the weight of the load for certification.
  - The actual weight of the equipment may vary somewhat from the actual rigged weight during the flight evaluation due to equipment modifications, fuel, equipment added to the load, or different models of the same item. The load weight on the equipment data plate or in the operator's manual takes precedence over the load weight in this manual. Weigh the load if there is any doubt about its actual weight. If the load weight exceeds the weight listed in the load description paragraph, the load becomes a unique load. Contact your service point of contact if you have any questions about the load description or weight.
  - Equipment such as cargo trailers and cargo trucks contain descriptions of the allowable additional cargo weight. Do not exceed the fully loaded weight. Some trailers become extremely unstable at low weights; therefore, a minimum weight is identified. If your trailer is below that weight, add more cargo or dummy weight as close to the center of the trailer as possible until you reach the minimum weight.
- **Preparation.** The preparation steps are intended to reduce the possibility of damage to the equipment caused by sling leg entanglement during the hookup and lift-off operation or by wind resistance encountered during the flight. Since these preparation steps are not directive in nature, the commander assumes responsibility for any damage to the equipment caused by deviation from the preparation steps.
- **Rigging.** The rigging steps give information as to the position of the apex fitting on the load, routing orientation of the sling legs, location of the lift provisions, chain link number for each sling leg, and steps required to prevent the sling legs from becoming entangled on the load. Do not change the chain link number in the rigging procedures under any circumstances as it may change sling leg loading and cause lift provision failure.

- The purpose of the illustration accompanying the rigging procedures is to depict what a properly rigged load looks like with the slack removed from the sling legs. The arrow identifies the direction of flight.
- Appendix A contains NSN component listings for slings, sling sets, cargo nets, and other miscellaneous equipment and materials.

- **Hookup.** Certain sling loads, such as HMMWVs with shelters, present substantial risk of damage to the load or injury to the hookup personnel. This risk is increased during dual point hookup or night operations.
  - To reduce the risk of damage to the load or injury to the hookup personnel an extended sling system or reach pendant as defined in FM 4-20.197 may be used.
  - Using a reach pendant increases the distance between the load and the helicopter. Reach pendants should not be used on loads that have a tendency to spin during flight. A static discharge person is not required when using a reach pendant.
  - If the tactical environment permits, the use of a longline sling set may reduce the risk.

GENERAL RIGGING INSTRUCTIONS

CAUTIONS

1. Inspect lifting provisions and supporting structure for damage or degradation prior to sling loading. Do not transport loads with damaged or degraded lift provisions.

2. Do not mix different capacity reach pendants. Use two 11,000-pound capacity or two 25,000-pound capacity reach pendants.

1-7. All dual-point loads have rigging instructions.

- **Preparing the Load.** Prepare the load to be transported by following the preparation and rigging instructions for each item. Typical preparation instructions will provide information to secure loose items, remove or secure canvas covers, and remove obstructions, such as antennas. Place protective padding on windshields and other components that could be damaged by the metal parts of the sling set during hookup or release. The load should be secure enough to withstand winds in excess of 120 knots caused by the forward airspeed of the aircraft. If possible, position the load in the takeoff direction so the pilot does not have to pick the load up and then turn the aircraft into the takeoff direction.
- **Preparing the Equipment.** Inspect and assemble the slings and miscellaneous equipment required to prepare and rig the load. Following the instructions in Chapter 6 of FM 4-20.197/MCRP 4-11.3E, VOL I/NWP 3-04.11/AFMAN 11-223(I), VOL I/COMDTINST M13482.2B, add or remove sling legs, chains, or apex fittings as required. Never exceed the capacity of the sling legs or apex fitting/web ring. If you have a sling set with a higher capacity than the sling set prescribed, use the chain link conversion chart in Appendix B to determine the corresponding chain link for your sling set.
- **Positioning and Attaching the Sling Set.** Position the sling set near the load. The sling legs for a typical load with four lifting points are routed as shown in Figure 1-1.
  - Rigging a typical load with four lifting points is begun by connecting:
    - Sling leg 1 to the left front lifting provision.
    - Sling leg 2 to the right front lifting provision.
    - Sling leg 3 to the left rear lifting provision.
    - Sling leg 4 to the right rear lifting provision.
    - If a six-leg sling set is required, the innermost sling legs, 5 and 6, are connected to the left and right middle lift provisions.

Note. Odd numbered sling legs go to the same side of the load.

- Following the equipment rigging procedures, loop the free end of the chain end through the lift provision and insert the specified chain link in the grabhook/grab link. Tie or tape the excess chain end to prevent the unrestrained chain from damaging the load. If necessary, wrap padding around the chain or rope assembly to prevent damage to the load or sling set. If the procedures prescribe a spreader bar, install and pad it according to the rigging instructions.
- Breakaway safety ties are used to temporarily restrain the sling legs to keep them from becoming entangled on the load as the helicopter lifts the load. These safety ties are made of Type I, 1/4-inch cotton webbing or duct tape.

- **Viewing the Load.** Left, right, front, and rear directions are designated from the driver's perspective for vehicles and towed equipment. Howitzer gun tubes are considered the front of the load. The front or rear is identified on other items of equipment. The sling leg numbering system prevents sling legs from crossing each other and causing damage to the sling legs or causing the load to twist in flight. To improve flight stability, some loads are transported backwards. Do not confuse the front of the load as it is carried with the end designated as the front for rigging purposes. The arrow shown in the illustration identifies the direction of flight.

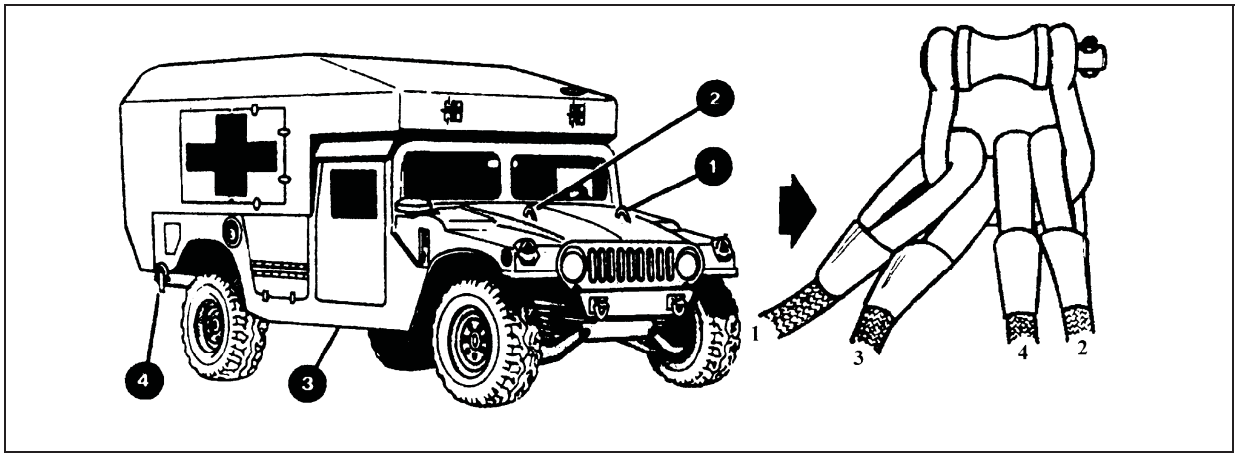

Figure 1-1. Sling Leg Lifting Point Designation

This page intentionally left blank.

Chapter 2

Certified Dual-Point Rigging Procedures for Wheeled Vehicles

2-1. This chapter contains rigging procedures for dual-point wheeled vehicle loads that have been certified for sling load. Each rigging procedure is found in a paragraph that includes a description of the load, materials required for rigging, and steps to complete the procedure. An applicability paragraph is also a part of each paragraph and identifies the certified loads. The certified dual-point rigging procedures for wheeled vehicles are in this section. Paragraphs 2-2 through 2-51 give detailed instructions for rigging loads.

***Notes*:** 1. Reach Pendants may be used on dual-point loads. Place a reach pendant on each apex fitting. A static discharge person is not required when using a Reach Pendant.
2. Canvas tops and doors should be removed and stowed inside the vehicle if time allows. These items may be damaged if the airspeed exceeds 100 knots.

M996/M997/M997A1/M997A2 TRUCK, AMBULANCE, (HMMWV)

2-2. The M996/M997/M997A1/M997A2 ambulance is rigged for dual-point sling load using the following procedures:

- **Applicability.** The following items in Table 2-1 are certified for the helicopter(s) listed in the following table by the US Army Natick Soldier Center:

Table 2-1. Truck, Ambulance, (HMMWV)

Nomenclature	*Max Weight (Pounds)*	*Sling Set*	*Link Count Front/Rear*	*Type of Aircraft*
Truck, Ambulance, M996	7,400	10K 25K	80/45 66/38	CH-47
Truck, Ambulance, M997	7,400	10K 25K	80/45 66/38	CH-47
Truck, Ambulance, M997A1	7,600	15K 40K	25/3 30/9	CH-53
Truck, Ambulance, M997A2	7,600	10K	80/45	CH-47

- **Materials.** The following materials are required to rig this load:
  - Sling set (see table) with one additional apex fitting or web ring for the sling set being used.
  - Tape, adhesive, pressure-sensitive, 2-inch wide roll.
  - Cord, nylon, Type III, 550-pound breaking strength.
  - Webbing, cotton, 1/4-inch, 80-pound breaking strength.
  - Spreader bar assembly, NSN: 4910-01-313-8839 (component of vehicle).
- **Personnel.** Two persons can prepare and rig this load in 15 minutes.

- **Procedures.** The following procedures apply to this load:
  - **Preparation.** Prepare the load using the following steps:
    - Fold the mirrors forward in front of the windshield and tie together with Type III nylon cord. Tape the windshield in an X formation from corner to corner.
    - Remove the spreader bar from under the right hand seat inside the ambulance.
    - Secure all equipment inside the rear compartment with tape, nylon cord, and/or lashings. Close and secure the door.
    - Secure all other equipment inside the vehicle with tape, nylon cord, and/or lashings. Close and secure the doors.
    - Ensure the fuel tank is not over 3/4 full. Inspect fuel tank cap, oil filler cap, and battery caps for proper installation.
    - Engage the vehicle parking brake. Place the transmission in neutral.
    - Ensure the front wheels are pointed straight ahead. Tie down the steering wheel using the securing device attached under the dashboard.
    - Secure the Red Cross insignia covers in the closed position.
    - Remove the keeper from the spreader bar and extend the bar so the holes line up. Reinstall pin and engage keeper. Use the sighting hole in the tube to assist in aligning holes for the pin. See top view insert in Figure 2-1.
    - Position the spreader bar across the rear end of the vehicle roof. Attach the spreader bar check cables to the eyebolts located on the aft exterior sidewall of the rear compartment. See rear view insert in Figure 2-1.
    - Install lift provisions on the outer ends of the rear bumper by removing the tie-down provisions located inboard of the bumper ends and installing them on the outer ends of the rear bumper, if necessary.
  - **Rigging.** Rig the load according to the steps in Figure 2-1.
  - **Hookup.** The static wand person discharges the static electricity with the static wand. The forward hookup person stands on the hood and places apex fitting 1 onto the forward cargo hook. The aft hookup person stands on the roof and places apex fitting 2 onto the aft cargo hook. The hookup team then carefully dismounts the vehicle and remains close to the load as the helicopter removes slack from the sling legs. When successful hookup is assured, the hookup team quickly exits the area underneath the helicopter to the designated rendezvous point.
  - **Derigging.** Derigging is the reverse of the preparation and rigging procedures.

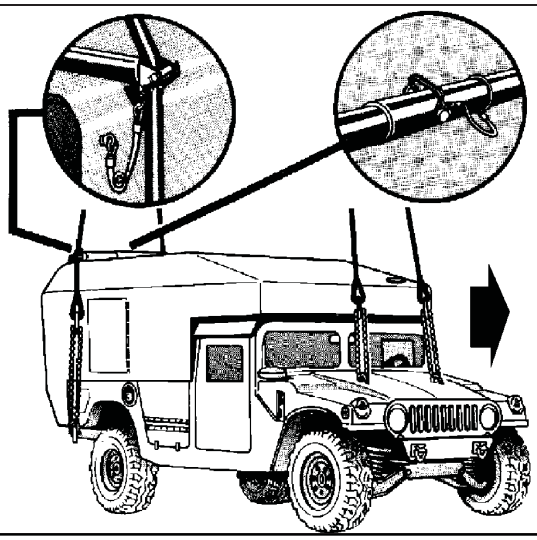

RIGGING STEPS

1. Connect 2 sling legs to apex fitting number 1. Position the apex fitting on top of the hood.

2. Loop the chain end of the sling legs through their respective lift provisions that protrudes through the hood. Place the correct link from Table 2-1 in the grab hook.

3. Connect 2 sling legs to apex fitting number 2. Position the apex fitting on top of the rear compartment. Place the nylon rope of the sling legs in the guides on the ends of the spreader bar. Attach the spreader bar guide retainer pins and keepers. Lay the spreader bar on the roof. Ensure the sling legs are in front of the check cable eyebolts.

4. The rear lift provisions are located on the outer ends of the rear bumper. Loop the chain end of sling legs through their respective lift provisions. Place the correct link from Table 2-1 in the grab hook.

5. Secure all excess chain with tape or Type III nylon cord.

6. Cluster and tie (breakaway technique) the sling legs in each sling set on top of the vehicle to prevent entanglement during hookup and lift-off.

Figure 2-1. M996/M997/M997A1/M997A2 Ambulance

CAUTION

Do not use the lift shackles located near the center of the rear bumper or sling load lift provisions.

M966/M1036/M1045/M1045A2/M1046 TOW MISSILE CARRIER (HMMWV)M1025/M1025A2/M1026/M1043/M1043A2/M1043A2 WITH MARINE ARMOR KIT (MAK)(USMC)/M1044/M1151 ARMAMENT CARRIER (HMMWV)/M1114 UP-ARMORED HMMWV

2-3. The M966/M1036/M1045/M1045A2/M1046 TOW missile carrier, M1025/M1025A2/M1026/ M1043/M1043A2/ M1043A2 with Marine Armor Kit (MAK)(USMC)/M1044 armament carrier, M1114 Up-Armored HMMWV are rigged for dual-point sling load using the following procedures:

- **Applicability.** The following items in Table 2-2 are certified for the helicopter(s) listed in the following table by the US Army Natick Soldier Center:

Table 2-2. TOW Missile/Armament Carrier

Nomenclature	*Max Weight (Pounds)*	*Sling Set*	*Link Count Front/Rear*	*Type of Aircraft*
TOW Missile Carrier (HMMWV), M966/M1036/M1045/ M1046	Varies by Model	10K 15K 40K	80/45 25/3 30/9	CH-47 CH-53 CH-53
Nomenclature	***Max Weight (Pounds)***	***Sling Set***	***Link Count Front/Rear***	***Type of Aircraft***
TOW Missile Carrier, HMMWV, M1045A2	10,300	25K 15K 40K	65/36 25/3 30/9	CH-47 CH-53 CH-53
Armament Carrier, HMMWV, M1025/M1026	8,200	15K 40K 10K	25/3 40/9 80/45	CH-53 CH-53 CH-47
Armament Carrier, HMMWV, M1043/M1044	8,400	15K 40K 10K	25/3 40/9 80/45	CH-53 CH-53 CH-47
Armament Carrier, HMMWV, M1025A2/M1043A2	10,300	15K 40K 25K	25/3 40/9 65/36	CH-53 CH-53 CH-47
Up-Armored HMMWV, M1114	12,100	25K 15K	60/30 30/3	CH-47 CH-53
Armament Carrier, HMMWV, M1043A2 with MAK (USMC)	10,300	15K	35/3	CH-53
Armament Carrier, HMMWV, M1151 (Empty)	7,300	25K	30/3	CH-47
Armament Carrier, HMMWV, M1151 (Loaded))	11,500	25K 15K	20/3	CH-47 CH-53

WARNING

The M1151 armament carrier HMMWV should not be flown empty under the CH-53 in a dual-point configuration. The weight distribution may exceed aircraft limitations.

- **Materials.** The following materials are required to rig this load:
  - Sling set (10,000-pound capacity, 25,000-pound capacity, or 40,000-pound capacity) with one additional apex fitting for the sling set being used.

    OR
  - Sling set (15,000-pound capacity) with one additional web ring.
    - Chain length, from a 15,000-pound capacity sling set (4 each) (used on M1043A2 with MAK).
    - Coupling link, from a 15,000-pound sling set (4 each) (used on M1043A2 with MAK).
  - Tape, adhesive, pressure-sensitive, 2-inch wide roll.
  - Cord, nylon, Type III, 550-pound breaking strength.
  - Webbing, cotton, 1/4-inch, 80-pound breaking strength.
  - Felt sheet, cattle hair, Type IV, 1/2-inch or suitable padding.
- **Personnel.** Two persons can prepare and rig this load in 15 minutes.
- **Procedures.** The following procedures apply to this load:
  - **Preparation.** Prepare the load using the following steps:
    - Extend the sling leg chains by connecting one additional chain length to each chain on a 15,000-pound capacity sling set with a coupling link (used on M1043A2 with MAK).
    - Fold mirrors forward in front of the windshield for added protection and tie together with Type III nylon cord.
    - Secure all equipment and cargo inside the vehicle with tape, nylon cord, or lashings. Remove antennas and stow inside vehicle.
    - Ensure the fuel tank is not over 3/4 full. Inspect fuel tank cap, oil filler cap, and battery caps for proper installation.
    - Engage the vehicle parking brake and place the transmission in neutral.
    - Ensure the front wheels are pointed straight ahead. Tie down the steering wheel, using the securing device attached under the dashboard.

CAUTION

Do not apply tape to the windows or windshield of the M1114 up-armored HMMWV. Tape will damage the windows.

  - **Rigging.** Rig the load according to the steps in Figure 2-2.
  - **Hookup.** The hookup team stands on the roof of the vehicle. The static wand person discharges the static electricity with the static wand. The forward hookup person places apex fitting 1 onto the forward cargo hook. The aft hookup person places apex fitting 2 onto the aft cargo hook. The hookup team then carefully dismounts the vehicle and remains close to the load as the helicopter removes slack from the sling legs. When successful hookup is assured, the hookup team quickly exits the area underneath the helicopter to the designated rendezvous point.
  - **Derigging.** Derigging is the reverse of the preparation and rigging procedures.

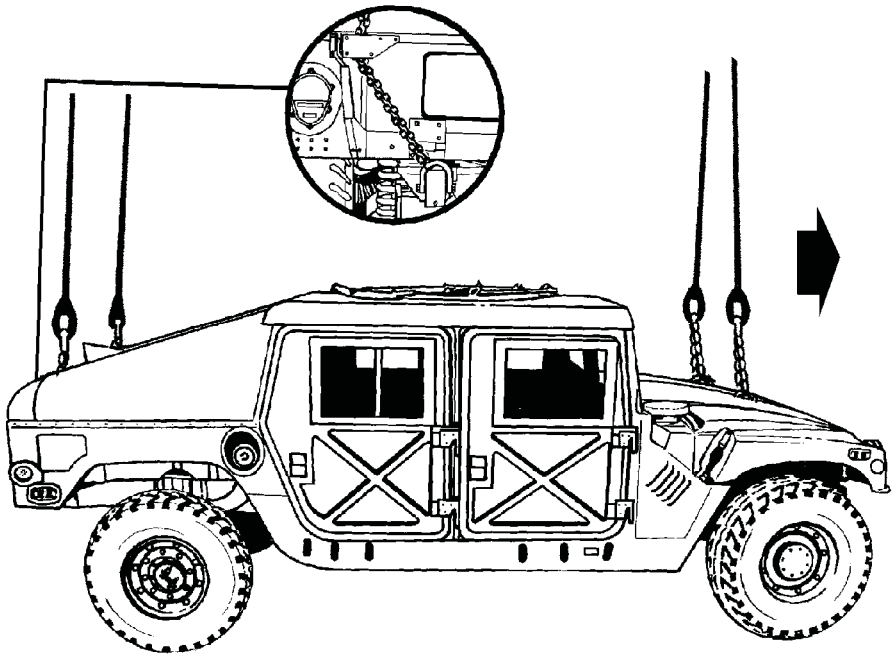

RIGGING STEPS

1. Connect 2 sling legs to apex fitting number 1. Position the apex fitting on top of the hood.
2. Loop the chain end of the sling legs through their respective lift provisions that protrudes through the hood. Place the correct link from Table 2-2 in the grab hook.
3. Connect 2 sling legs to apex fitting number 2. Position the apex fitting on the roof of the vehicle.
4. Loop the chain end of the sling legs through their respective eyelet openings in the upper corner of the tailgate. Loop the chain end through the lift shackle on the rear bumper and thread back through the eyelet opening in the tailgate. Place the correct link from Table 2-2 in the grab hook. Pad the chains with felt where they contact the vehicle.
5. Secure all excess chain with tape or Type III nylon cord.
6. Cluster and tie (breakaway technique) the sling legs in each sling set on top of the vehicle to prevent entanglement during hookup and lift-off.

Figure 2-2. TOW Missile/Armament Carrier

M998/M1123 WITH MARINE ARMOR KIT (MAK) (USMC)/M1037 MODIFIED (GVW 9,400 LBS)/M1038/M1097/M1097A1/ M1097A2/M1152 TRUCK, CARGO, 1 1/4-TON (HMMWV)

2-4. The M998/M1123 with MAK/M1037 modified (GVW 9,400 lbs)/M1038/M1097/M1097A1/ M1097A2/M1152 trucks, cargo, 1 1/4-ton are rigged for dual-point sling load using the following procedures:

- **Applicability.** The following items in Table 2-3 are certified for the helicopter(s) listed in the following table by the US Army Natick Soldier Center:

Table 2-3. 1 1/4-Ton Cargo Truck

Nomenclature	*Max Weight (Pounds)*	*Sling Set*	*Link Count Front/Rear*	*Type of Aircraft*
Truck, 1 1/4-ton, HMMWV, M998/M1038	7,700	10K 15K 40K	80/45 25/3 30/9	CH-47 CH-53
Truck, 1 1/4-ton, HMMWV, M998 with AN/MRC-110A Radio Set	7,700	10K 15K	80/45 25/3 30/9	CH-47 CH-53
Truck, 1 1/4-ton, HMMWV, M998A1, Joint Surveillance Target Attack Radar (JSTAR), Support Vehicle	7,500	10K	80/45	CH-47
Truck, 1 1/4-ton, HMMWV, Modified, (GVW 9,400 lbs), M1037	9,400	10K	80/25	CH-47
Truck, 1 1/4-ton, Heavy HMMWV, Cargo Variant, M1097	10,000	10K	80/45	CH-47
Truck, 1 1/4-ton, Heavy HMMWV, Cargo Variant, M1097	10,001	25K	60/10	CH-47
Truck, 1 1/4-ton, Heavy HMMWV, Cargo Variant, M1097A1	10,300	25K	80/45	CH-47
Truck, 1 1/4-ton, Heavy HMMWV, Cargo Variant, M1097A2	10,300	25K	60/10	CH-47
Truck, 1 1/4-ton, Heavy HMMWV, Cargo Variant, M1097/M1097A2, Integrated System Control (ISYSCON), Support Carrier/Radio Vehicle	10,300	25K	60/10	CH-47
Truck, 1 1/4-ton, Heavy HMMWV, Cargo Variant, M1097/M1097A2, Tactical Messaging System, Transit Case Carrier	10,300	25K	60/10	CH-47
Truck, 1 1/4-ton, HMMWV with MAK, M1123, 2 Door or 4 Door Passenger Compartment (USMC)	10,300	15K	35/3	CH-53
Truck, 1 1/4-ton, Heavy HMMWV, Cargo Variant, M1152 (Empty)	7,300	25K	30/3	Ch-47
Truck, 1 1/4-ton, Heavy HMMWV, Cargo Variant, M1152 (Loaded)	11,500	25K	20/3	CH-47

WARNING

This cargo vehicle (M1037 modified, 9,400-lb GVW) should not be confused with the shelter carrier (M1037, 8,600-lb GVW). The M1037 modified has improved lift provisions which allows it to be lifted at higher gross vehicle weights.

- **Materials.** The following materials are required to rig this load:
  - Sling set (10,000-pound capacity, 25,000-pound capacity, or 40,000-pound capacity) with one additional apex fitting for the sling set being used.

    OR
  - Multileg sling set (15,000-pound capacity) (2 each).
  - Tape, adhesive, pressure-sensitive, 2-inch wide roll.
  - Cord, nylon, Type III, 550-pound breaking strength.
  - Webbing, cotton, 1/4-inch, 80-pound breaking strength.
- **Personnel.** Two persons can prepare and rig this load in 15 minutes.
- **Procedures.** The following procedures apply to this load:
  - **Preparation.** Prepare the load using the following steps:
    - Fold mirrors forward in front of the windshield for added protection and tie together with Type III nylon cord. If installed, remove canvas covering over the bed of the truck. Remove the doors. If time permits, fold canvas top and tie to windshield for added protection.
    - Secure all equipment and cargo inside the vehicle with tape, nylon cord, or lashings. Remove antennas and stow inside vehicle.
    - Ensure the fuel tank is not over 3/4 full. Inspect fuel tank cap, oil filler cap, and battery caps for proper installation.
    - Engage the vehicle parking brake and put the transmission in neutral.
    - Ensure the front wheels are pointed straight ahead. Tie down the steering wheel, using the securing device attached under the dashboard.
  - **Rigging.** Rig the load according to the steps in Figure 2-3.
  - **Hookup.** The static wand person discharges the static electricity with the static wand. The forward hookup person stands in the driver's compartment and places apex fitting 1 onto the forward cargo hook. The aft hookup person stands in the bed of the truck and places apex fitting 2 onto the aft cargo hook. The hookup team then carefully dismounts the vehicle and remains close to the load as the helicopter removes slack from the sling legs. When successful hookup is assured, the hookup team quickly exits the area underneath the helicopter to the designated rendezvous point.
  - **Derigging.** Derigging is the reverse of the preparation and rigging procedures.

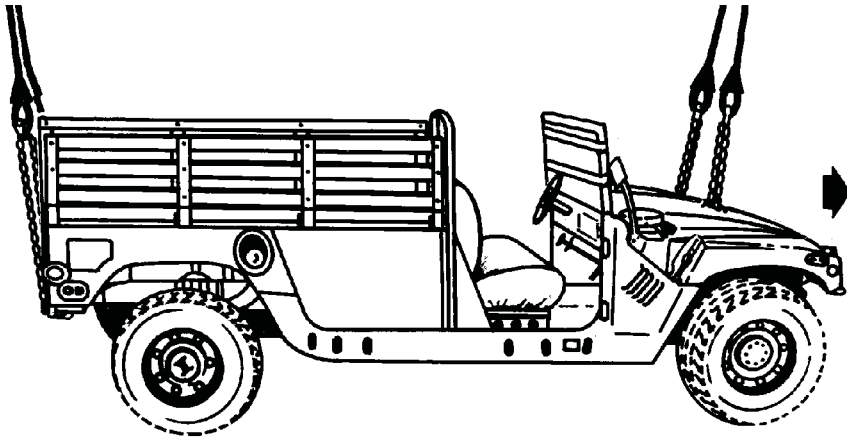

RIGGING STEPS

1. Connect 2 sling legs to apex fitting number 1. Position the apex fitting on top of the hood.

2. Loop the chain end of the sling legs through their respective lift provisions that protrudes through the hood. Place the correct link from Table 2-3 in the grab hook.

3. Connect 2 sling legs to apex fitting number 2. Position the apex fitting in the bed of the vehicle.

4. Loop the chain end of the sling legs through their respective eyelet openings in the upper corner of the tail gate. Loop the chain end through the lift shackle on the rear bumper and thread back through the eyelet opening in the tailgate. Place the correct link from Table 2-3 in the grab hook.

5. Secure all excess chain with tape or Type III nylon cord.

6. Cluster and tie (breakaway technique) the sling legs in each sling set on top of the vehicle to prevent entanglement during hookup and lift-off.

Figure 2-3. 1 1/4-Ton Cargo Truck

M1037 SHELTER CARRIER (HMMWV) WITH S-250 OR S-250E SHELTER

2-5. The M1037 shelter carrier with S-250 or S-250E shelter is rigged for dual-point sling load using the following procedures:

- **Applicability**. The following items in Table 2-4 are certified for the helicopter(s) listed in the following table by the US Army Natick Soldier Center:

Table 2-4. M1037 Shelter Carrier with S-250 or S-250E Shelter

Nomenclature	*Max Weight (Pounds)*	*Sling Set*	*Link Count Front/Rear*	*Type of Aircraft*
NC Operations	8,800	10K	80/45	CH-47
NC Switch	8,513	10K	80/45	CH-47
NC LOS (V3)	8,611	10K	80/45	CH-47
NC Management	8,800	10K	80/45	CH-47
NC Support Vehicle	8,400	10K	80/45	CH-47
LEN Operations	8,800	10K	80/45	CH-47
LEN Switch	8,800	10K	80/45	Ch-47
LEN LOS (V4)	8,800	10K	80/45	CH-47
LEN Management	8,800	10K	80/45	CH-47
LEN Cable Vehicle	8,180	10K	80/45	CH-47
SCC Command	8,800	10K	80/45	CH-47
SCC Planning	8,300	10K	80/45	CH-47
SCC Technical	8,507	10K	80/45	CH-47
LOS (V1)	8,800	10K	80/45	CH-47
LOS (V2)	8,500	10K	80/45	CH-47
Radio Access Unit	8,800	10K	80/45	CH-47
SEN (V1)	8,800	10K	80/45	CH-47
SEN (V2)	8,800	10K	80/45	CH-47
Maintenance #1	8,084	10K	80/45	CH-47
Maintenance #2	8,350	10K	80/45	CH-47
Battalion Spares	8,800	10K	80/45	CH-47
Company Spares	7,850	10K	80/45	CH-47
AN/TLQ-17	8,200	10K	80/45	CH-47
AN/TLQ-17A (V3)	8,040	10K	80/45	CH-47
Deployable Media Production Center	7,840	10K	80/45	CH-47
Operational Control Group (OCG) /Firefinder AN/TPQ-36 (V) Block IIB	7,500	10K 15K	80/45 48/27	CH-47 CH-53

- **Materials.** The following materials are required to rig this load:
  - Sling set (10,000-pound capacity) with one additional apex fitting.
  - Chain length, part number 38850-00053-101, from a 10,000-pound capacity sling set (4 each).
  - Coupling link, part number 577-9125, from a 10,000-pound sling set (4 each).

OR

- Multileg sling set (15,000-pound capacity) with one additional web ring.
- Chain length, part number 34080-4, from a 15,000-pound capacity sling set (4 each).
- Coupling link, part number 31611, from a 15,000-pound sling set (4 each).
- Tape, adhesive, pressure-sensitive, 2-inch wide roll.
- Cord, nylon, Type III, 550-pound breaking strength.
- Webbing, cotton, 1/4-inch, 80-pound breaking strength.
- Felt sheet, cattle hair, Type IV, 1/2-inch or suitable padding.

- **Personnel.** Two persons can prepare and rig this load in 15 minutes.
- **Procedures.** The following procedures apply to this load:
  - **Preparation.** Prepare the load using the following steps:
    - Connect one additional chain length to each chain of the sling set with the coupling link.
    - Fold mirrors forward in front of the windshield for added protection and tie together with Type III nylon cord.
    - Secure the shelter to the truck using wire rope or tie-down assemblies. Secure all equipment inside the shelter with tape, nylon cord, or lashings; close and secure the door.
    - Secure all equipment and cargo inside the vehicle with tape, nylon cord, or lashings. Secure the doors shut if installed.
    - Ensure the fuel tank is not over 3/4 full. Inspect fuel tank cap, oil filler cap, and battery caps for proper installation.
    - Engage the vehicle parking brake and put the transmission in neutral.
    - Ensure the front wheels are pointed straight ahead. Tie down the steering wheel, using the securing device attached under the dashboard.
    - Install the lift provisions on the outer ends of the rear bumper by removing the tiedown provisions located inboard of the bumper end and installing them on the outer ends of the rear bumper.
  - **Rigging.** Rig the load according to the steps in Figure 2-4.
  - **Hookup.** The hookup team stands on top of the shelter. The static wand person discharges the static electricity with the static wand. The hookup person places the apex fitting onto the aircraft cargo hook. The hookup team then carefully dismounts the vehicle and remains close to the load as the helicopter removes slack from the sling legs. When successful hookup is assured, the hookup team quickly exits the area underneath the helicopter to the designated rendezvous point.
  - **Derigging.** Derigging is the reverse of the preparation and rigging procedures.

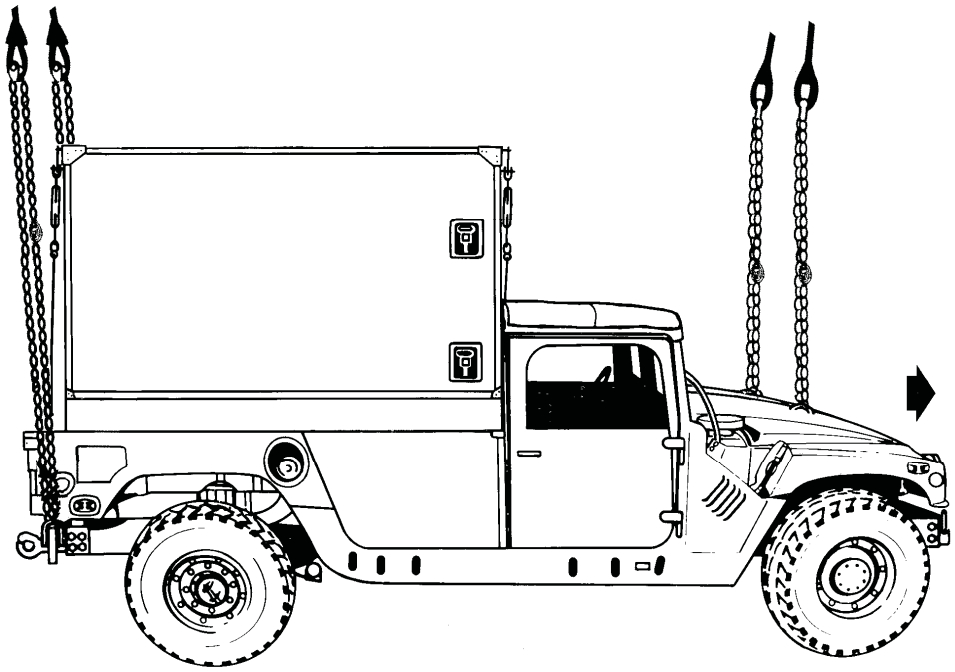

RIGGING STEPS

1. Connect 2 sling legs to apex fitting number 1. Position the apex fitting on top of the hood.
2. Loop the chain end of the sling legs through their respective lift provisions that protrudes through the hood. Place the correct link from Table 2-4 in the grab hook.
3. Connect 2 sling legs to apex fitting number 2. Position the apex fitting in the bed of the vehicle.
4. Loop the chain end through the lift shackle on the rear bumper located on the outer ends of the bumper. Place the correct link from Table 2-4 in the grab hook.
5. Wrap the rear slings with padding where they contact the shelter sides.
6. Secure all excess chain with tape or Type III nylon cord.
7. Cluster and tie (breakaway technique) the sling legs in each sling set on top of the vehicle to prevent entanglement during hookup and lift-off.

Figure 2-4. M1037 Shelter Carrier with S-250 or S-250E Shelter

CAUTION

Do not use the lift shackles located near the center of the rear bumper for sling load lift provisions.

M1097 SHELTER CARRIER, HEAVY HMMWV, WITH S-250 OR S-250E SHELTER

2-6. The M1097 shelter carrier, heavy HMMWV with S-250 or S-250E shelter is rigged for dual-point sling load using the following procedures:

- **Applicability.** The following items in Table 2-5 are certified for the helicopter(s) listed in the following table by the US Army Natick Soldier Center:

Table 2-5. M1097 Shelter Carrier, Heavy HMMWV, with S-250 or S-250E Shelter

Nomenclature	*Max Weight (Pounds)*	*Sling Set*	*Link Count Front/Rear*	*Type of Aircraft*
S-250/S-250E	10,001	25K	60/10	CH-47
AN/TRC-170 Communication Shelter	9,240	15K	40/3	CH-53
TRQ-32, Intelligence and Electronic Warfare (IEW) System	9,700	10K	60/10	CH-47
Platoon Operations Center (POC), Intelligence and Electronic Warfare (IEW) System	9,700	10K	60/10	CH-47
Mobile Subscriber Equipment Contingency Communications Package/Light Forces Contingency Communications Package in S-250E	9,993	10K	60/10	CH-47
Mobile Subscriber Equipment Contingency Communications Package/Light Forces Contingency Communications Package in S-250	8,913	10K	60/10	CH-47
LOS (V1)	9,038	10K	60/10	CH-47
LOS (V2)	9,038	10K	60/10	CH-47
LOS (V3)	9,038	10K	60/10	CH-47
LOS (V4)	9,038	10K	60/10	CH-47
NODAL Support Vehicle	8,250	10K	60/10	CH-47

Note: All certified shelters in paragraph 2-4 (M1037 Shelter Carrier, HMMWV, With S-250/S-250E Shelter) are certified for sling loading on the M1097 Shelter Carrier with an increased maximum weight of 300 pounds.

- **Materials.** The following materials are required to rig this load:
  - Sling set (10,000-pound capacity or 25,000-pound capacity) with one additional apex fitting for the sling set being used.

    OR
  - Multileg sling set (15,000-pound capacity) with one additional web ring.
  - Additional chain lengths from the sling set being used (4 each).
  - Additional coupling links from the sling set being used (4 each).
  - Tape, adhesive, pressure-sensitive, 2-inch wide roll.
  - Cord, nylon, Type III, 550-pound breaking strength.
  - Webbing, cotton, 1/4-inch, 80-pound breaking strength.
  - Felt sheet, cattle hair, Type IV, 1/2-inch or suitable padding.
- **Personnel.** Two persons can prepare and rig this load in 15 to 25 minutes.

- **Procedures.** The following procedures apply to this load:
  - **Preparation.** Prepare the load using the following steps:
    - Connect one additional chain length to each chain of the sling set with the coupling link.
    - Fold mirrors forward in front of the windshield for added protection and tie together with Type III nylon cord.
    - Secure the shelter to the truck using wire rope or tie-down assemblies. Secure all equipment inside the shelter with tape, nylon cord, or lashings; close and secure the door.
    - Secure all equipment and cargo inside the vehicle with tape, nylon cord, or lashings. Secure the doors shut if installed.
    - Ensure the fuel tank is not over 3/4 full. Inspect fuel tank cap, oil filler cap, and battery caps for proper installation.
    - Engage the vehicle parking brake and put the transmission in neutral.
    - Ensure the front wheels are pointed straight ahead. Tie down the steering wheel, using the securing device attached under the dashboard.
    - Install the lift provisions on the outer ends of the rear bumper.
  - **Rigging.** Rig the load according to the steps in Figure 2-5.
  - **Hookup.** The hookup team stands on top of the shelter. The static wand person discharges the static electricity with the static wand. The forward hookup person places apex fitting 1 onto the forward cargo hook. The aft hookup person places apex fitting 2 onto the aft cargo hook. The hookup team then carefully dismounts the vehicle and remains close to the load as the helicopter removes slack from the sling legs. When successful hookup is assured, the hookup team quickly exits the area underneath the helicopter to the designated rendezvous point.
  - **Derigging.** Derigging is the reverse of the preparation and rigging procedures.

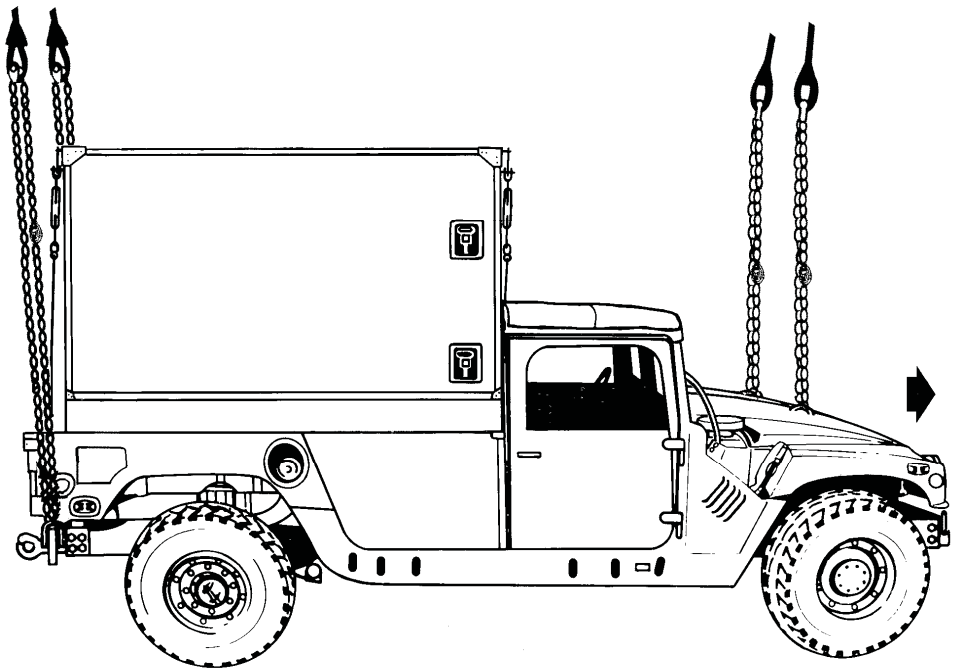

Figure 2-5. M1097 Shelter Carrier, Heavy HMMWV, with S-250 or S-250E Shelter

RIGGING STEPS
1. Connect 2 sling legs to apex fitting number 1. Position the apex fitting on top of the hood. 2. Loop the chain end of the sling legs through their respective lift provisions that protrudes through the hood. Place the correct link from Table 2-5 in the grab hook. 3. Connect 2 sling legs to apex fitting number 2. Position the apex fitting in the bed of the vehicle. 4. Loop the chain end through the lift shackle on the rear bumper located on the outer ends of the bumper. Place the correct link from Table 2-5 in the grab hook. 5. Wrap the rear slings with padding where they contact the shelter sides. 6. Secure all excess chain with tape or Type III nylon cord. 7. Cluster and tie (breakaway technique) the sling legs in each sling set on top of the vehicle to prevent entanglement during hookup and lift-off.

Figure 2-5. M1097 Shelter Carrier, Heavy HMMWV, with S-250 or S-250E Shelter (Continued)

CAUTION

Do not use the lift shackles located near the center of the rear bumper for sling load lift provisions.

M1037/M1042 SHELTER CARRIER (HMMWV) WITH LIGHTWEIGHT MULTIPURPOSE SHELTER (LMS)

2-7. The M1037/M1042 shelter carrier with lightweight multipurpose shelter is rigged for dual-point sling load using the following procedures:

- **Applicability.** The following items in Table 2-6 are certified for the helicopter(s) listed in the following table by the US Army Natick Soldier Center:

Table 2-6. M1037/M1042 Shelter Carrier with Lightweight Multipurpose Shelter

Nomenclature	*Max Weight (Pounds)*	*Sling Set*	*Link Count Front/Rear*	*Type of Aircraft*
Digital Group Multiplexer (DGM) AN/TRC-138C	9,020	10K	40/3	CH-47
High Frequency Communications Central AN/TRC-120	8,765	15K	40/3	CH-53

- **Materials.** The following materials are required to rig this load:
  - Sling set (10,000-pound capacity) with one additional apex fitting.
    - Chain length, part number 38850-00053-101, from a 10,000-pound capacity sling set (4 each).
    - Coupling link, part number 5779125, from a 10,000-pound capacity sling set (4 each).

    OR
  - Multileg sling set (15,000-pound capacity) with one additional web ring.
  - Additional chain lengths from the multileg sling set (8 each).

- Additional coupling links from the multileg sling set (8 each).
- Tape, adhesive, pressure-sensitive, 2-inch wide roll.
- Cord, nylon, Type III, 550-pound breaking strength.
- Webbing, cotton, 1/4-inch, 80-pound breaking strength.
- Felt sheet, cattle hair, Type IV, 1/2-inch or suitable padding.
- Padding, cellulose.

- **Personnel.** Two persons can prepare and rig this load in 15 minutes.
- **Procedures.** The following procedures apply to this load:
  - **Preparation.** Prepare the load using the following steps:
    - Extend the sling leg chains by connecting one additional chain length to each chain on a 10,000-, 25,000- or 40,000-pound capacity sling set with coupling links. Connect two additional chain lengths to each chain on the 15,000-pound multileg sling set chain with coupling links.
    - Fold mirrors forward in front of the windshield for added protection and tie together with Type III nylon cord.
    - Secure all equipment inside the shelter with tape, nylon cord, or lashings; close and secure shelter vents and door with nylon cord or tape.
    - Secure environmental control unit cover with duct tape.
    - Disconnect the power cord from the rear panel and secure it to the rear platform with Type III nylon cord. Lower the power panel door and secure the door.
    - Secure all equipment and cargo inside the vehicle with tape, nylon cord, or lashings. Secure the doors shut if installed.
    - Ensure the fuel tank is not over 3/4 full. Inspect fuel tank cap, oil filler cap, and battery caps for proper installation.
    - Engage the vehicle parking brake and put the transmission in neutral.
    - Ensure the front wheels are pointed straight ahead. Tie down the steering wheel, using the securing device attached under the dashboard.
    - Tape the windshield in an X formation from corner to corner.
    - Install the lift provisions on the outer ends of the rear bumper.
    - Remove the upper antenna mounting bracket if installed.
  - **Rigging.** (USMC - CH-53) Rig the load according to the steps in Figure 2-6 and using the link counts in Table 2-6. (US ARMY - CH-47) Rig the load according to the steps in Figure 2-7 and using the link counts in Table 2-6.
  - **Hookup.** The hookup team stands on top of the shelter. The static wand person discharges the static electricity with the static wand. The forward hookup person places apex fitting 1 onto the forward cargo hook. The aft hookup person places apex fitting 2 onto the aft cargo hook. The hookup team then carefully dismounts the vehicle and remains close to the load as the helicopter removes slack from the sling legs. When successful hookup is assured, the hookup team quickly exits the area underneath the helicopter to the designated rendezvous point.
  - **Derigging.** Derigging is the reverse of the preparation and rigging procedures.

M1097/M1097A2 SHELTER CARRIER (HMMWV) WITH LIGHTWEIGHT MULTIPURPOSE SHELTER (LMS) (USMC)

2-8. The M1097/M1097A2 shelter carrier with lightweight multipurpose shelter is rigged for dual-point sling load using the following procedures:

- **Applicability.** The following items in Table 2-7 are certified for the helicopter(s) listed in the following table by the US Army Natick Soldier Center:

Table 2-7. M1097/M1097A2 Shelter Carrier with Lightweight Multipurpose Shelter (USMC)

Nomenclature	*Max Weight (Pounds)*	*Sling Set*	*Link Count Front/Rear*	*Type of Aircraft*
High Mobility Downsized (HMD) Direct Air Support Central	8,420	15K	40/3	CH-53
Operations Central (OC) Group Firefinder AN/TPQ-36 (V) 8	8,620	15K	40/3	CH-53
Integrated Meteorological Systems (IMETS), Block I & II	9,050	15K	40/3	CH-53
Enhanced Position Location Reporting System (EPLRS) Downsized Net Control Station (NCS-E(D))	10,000	15K	40/3	CH-53
High Frequency Communications Central AN/TRC 120	8,765	15K	40/3	CH-53
Tactical Remote Sensor System (TRSS) Sensor Mobile Monitoring System (SMMS)	7,685	15K	40/3	CH-53
Meteorological Measuring Set AN/TMQ-41	7,770	15K	40/3	CH-53
Air Defense Communications Platform AN/MSQ-124	10,000	15K	40/3	CH-53
Marine Expeditionary Force Intelligence Analysis System S1	9,194	15K	40/3	CH-53
Marine Expeditionary Force Intelligence Analysis System S2	9,126	15K	40/3	CH-53
Tactical Control and Analysis Center	9,300	15K	40/3	CH-53
Communications Data Link Systems on M1097A2	9,900	15K	40/3	CH53

- **Materials.** The following materials are required to rig this load:
  - Multileg sling set (15,000-pound capacity) with one additional web ring.
    - Additional chain lengths from the multileg sling set (8 each).
    - Additional coupling links from the multileg sling set (8 each).
  - Tape, adhesive, pressure-sensitive, 2-inch wide roll.
  - Cord, nylon, Type III, 550-pound breaking strength.
  - Webbing, cotton, 1/4-inch, 80-pound breaking strength.
  - Felt sheet, cattle hair, Type IV, 1/2-inch or suitable padding.
  - Padding, cellulose.
- **Personnel.** Two persons can prepare and rig this load in 15 minutes.
- **Procedures.** The following procedures apply to this load:
  - **Preparation.** Prepare the load using the following steps:
    - Extend the sling leg chains by connecting two additional chain lengths to each chain on the multileg sling set chain with coupling links.
    - Fold mirrors forward in front of the windshield for added protection and tie together with Type III nylon cord.
    - Secure all equipment inside the shelter with tape, nylon cord, or lashings; close and secure shelter vents and door with nylon cord or tape.
    - Secure environmental control unit cover with duct tape.
    - Disconnect the power cord from the rear panel and secure it to the rear platform with Type III nylon cord. Lower the power panel door and secure the door.
    - Secure all equipment and cargo inside the vehicle with tape, nylon cord, or lashings. Secure the doors shut if installed.
    - Ensure the fuel tank is not over 3/4 full. Inspect fuel tank cap, oil filler cap, and battery caps for proper installation.
    - Engage the vehicle parking brake and put the transmission in neutral.
    - Ensure the front wheels are pointed straight ahead. Tie down the steering wheel, using the securing device attached under the dashboard.
    - Tape the windshield in an X formation from corner to corner.
    - Install the lift provisions on the outer ends of the rear bumper.
    - Remove the upper antenna mounting bracket if installed.
  - **Rigging.** Rig the load according to the steps in Figure 2-6.

- **Hookup.** The hookup team stands on top of the shelter. The static wand person discharges the static electricity with the static wand. The forward hookup person places apex fitting 1 onto the forward cargo hook. The aft hookup person places apex fitting 2 onto the aft cargo hook. The hookup team then carefully dismounts the vehicle and remains close to the load as the helicopter removes slack from the sling legs. When successful hookup is assured, the hookup team quickly exits the area underneath the helicopter to the designated rendezvous point.
- **Derigging.** Derigging is the reverse of the preparation and rigging procedures.

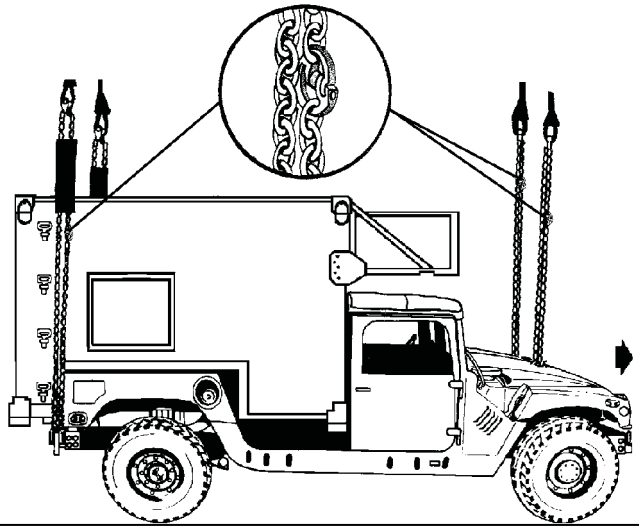

RIGGING STEPS

1. Connect 2 sling legs to apex fitting number 1. Position the apex fitting on top of the shelter.
2. Loop the chain end of the sling legs through their respective lift provisions that protrudes through the hood. Place the correct link from Table 2-7 in the grab hook.
3. Connect 2 sling legs to apex fitting number 2. Position the apex fitting on top of the shelter.
4. Loop the chain end of the sling legs through their respective lift provisions located on the outer ends of the rear bumper. Place the correct link from Table 2-7 in the grab hook.
5. Wrap the rear slings with padding where they contact the shelter sides.
6. Secure all excess chain with tape or Type III nylon cord.
7. Cluster and tie (breakaway technique) the sling legs in each sling set on top of the vehicle to prevent entanglement during hookup and lift-off.

Figure 2-6. M1097/M1097A2 Shelter Carrier with Lightweight Multipurpose Shelter (USMC)

CAUTION

Do not use the lift shackles located near the center of the rear bumper for sling load lift provisions.

M1097/M1097A2 SHELTER CARRIER (HMMWV) WITH LIGHTWEIGHT MULTIPURPOSE SHELTER (LMS) USING SHELTER LIFT RINGS AS SLING GUIDES

2-9. The M1097/M1097A2 shelter carrier with lightweight multipurpose shelter using shelter lift rings as sling guides is rigged for dual-point sling load using the following procedures:

- **Applicability.** The following items in Table 2-8 are certified for the helicopter(s) listed in the following table by the US Army Natick Soldier Center:

Table 2-8. Lightweight Multipurpose Shelter

Nomenclature	*Max Weight (Pounds)*	*Sling Set*	*Link Count Front/Rear*	*Type of Aircraft*
Operations Central (OC) Group Firefinder AN/TPQ-36 (V) 8	8,620	10K	40/3	CH-47
Integrated Meteorological Systems (IMETS), Block I & II	9,050	10K	40/3	CH-47
Digital Group Multiplexer (DGM) AN/TRC-138C	9,020	10K	40/3	CH-47
High Mobility Digital Group Multiplexer Assemblage (HMDA) AN/TRC-173B, AN/TRC-174B, AN/TRC-175B	9,100	10K	40/3	CH-47
Marine Expeditionary Force Intelligence Analysis System (IAS)	9,220	10K	40/3	CH-47
Spare Equipment and Maintenance Shelter AN/TSQ-190 (V) 1	9,220	10K	40/3	CH-47
Meteorological Measuring Set AN/TMQ-41	8,200	10K	40/3	CH-47
Forward Area Air Defense Command Control System AN/TSQ-183	7,561	10K	40/3	CH-47
Forward Area Air Defense Command Control System AN/TSQ-184	7,297	10K	40/3	CH-47
Mobile Radio Broadcasting Subsystem (MRBS)	9,746	10K	40/3	CH-47
Mobile Radio (MR) Cargo Vehicle	9,907	10K	40/3	CH-47
Mobile Television Broadcasting Subsystem (MTBS)	9,295	10K	40/3	CH-47
Mobile Television (MT) Cargo Vehicle	9,637	10K	40/3	CH-47
Mission Vehicle for the Common Ground Station, Joint Surveillance Target Attack Radar (JSTAR) System	10,300	25K	32/5	CH-47
Advanced Field Artillery Tactical Data Systems (AFATADS), System #1, RWS with a CHS-2 AN/GYG-3(V)1	8,882	10K	40/3	CH-47

- **Materials.** The following materials are required to rig this load:
  - Sling set (10,000-pound capacity) with one additional apex fitting.
    - Chain length, part number 38850-00053-101, from a 10,000-pound capacity sling set (4 each).
    - Coupling link, part number 5779125, from a 10,000-pound capacity sling set (4 each).

    OR
  - Sling set (25,000-pound capacity) with one additional apex fitting.
    - Chain length, part number 38850-00053-102, from a 25,000-pound capacity sling set (4 each).
    - Coupling link, part number 5779135, from a 25,000-pound capacity sling set (4 each).
  - Tape, adhesive, pressure-sensitive, 2-inch wide roll.

- Cord, nylon, Type III, 550-pound breaking strength.
- Webbing, cotton, 1/4-inch, 80-pound breaking strength.

- **Personnel.** Two persons can prepare and rig this load in 20 minutes.
- **Procedures.** The following procedures apply to this load:
  - **Preparation.** Prepare the load using the following steps:
    - Extend the sling leg chains by connecting one additional chain length to each chain on a 10,000- or 25,000-pound capacity sling set with coupling links.
    - Fold mirrors forward in front of the windshield for added protection and tie together with Type III nylon cord.
    - Secure all equipment inside the shelter with tape, nylon cord, or lashings; close and secure shelter vents and door with nylon cord or tape.
    - Secure environmental control unit cover with duct tape.
    - Disconnect the power cord from the rear panel and secure it to the rear platform with Type III nylon cord. Lower the power panel door and secure the door.
    - Secure all equipment and cargo inside the vehicle with tape, nylon cord, or lashings. Secure the doors shut if installed.
    - Ensure the fuel tank is not over 3/4 full. Inspect fuel tank cap, oil filler cap, and battery caps for proper installation.
    - Engage the vehicle parking brake and put the transmission in neutral.
    - Ensure the front wheels are pointed straight ahead. Tie down the steering wheel, using the securing device attached under the dashboard.
    - Tape the windshield in an X formation from corner to corner.
    - Install the lift provisions on the outer ends of the rear bumper.
    - Tie the shelter's rear lift rings together across the top of the shelter with Type III nylon cord. Place the rings in the up position facing the front of the vehicle.
  - **Rigging.** Rig the load according to the steps in Figure 2-7.

***Note*:** The procedures shown in Figure 2-6 may be used as alternate rigging procedures provided there is no interference between the sling leg chains and antenna mounts or other items on the vehicle. When using the procedures in Figure 2-6, use the link counts from Table 2-8.

  - **Hookup.** The hookup team stands on top of the shelter. The static wand person discharges the static electricity with the static wand. The forward hookup person places apex fitting 1 onto the forward cargo hook. The aft hookup person places apex fitting 2 onto the aft cargo hook. The hookup team then carefully dismounts the vehicle and remains close to the load as the helicopter removes slack from the sling legs. When successful hookup is assured, the hookup team quickly exits the area underneath the helicopter to the designated rendezvous point.
  - **Derigging.** Derigging is the reverse of the preparation and rigging procedures.

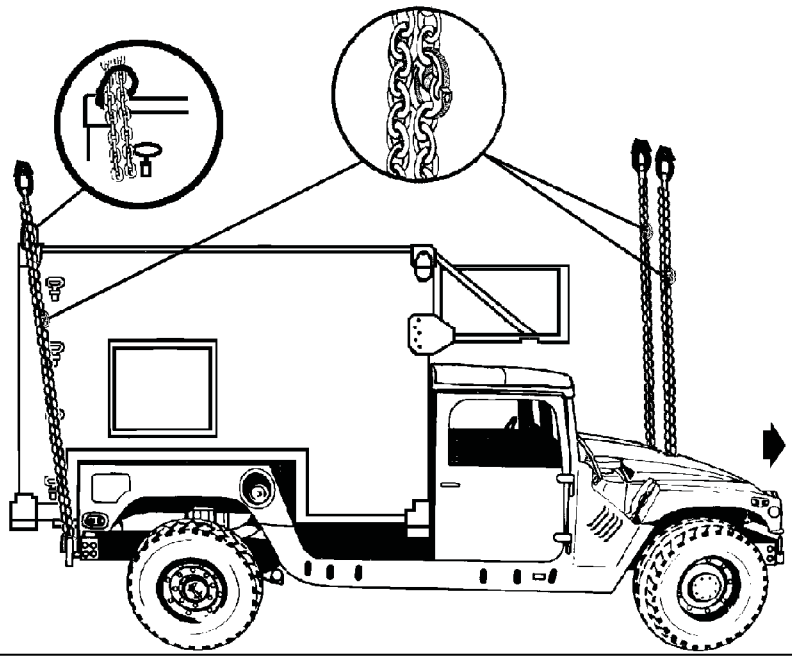

RIGGING STEPS

1. Connect 2 sling legs to apex fitting number 1. Position the apex fitting on top of the shelter.
2. Loop the chain end of the sling legs through their respective lift provisions that protrudes through the hood. Place the correct link from Table 2-8 in the grab hook.
3. Connect 2 sling legs to apex fitting number 2. Position the apex fitting on top of the shelter.
4. Route the right sling leg chain through the right rear shelter lift ring to the right rear lift provision located on the outer end of the rear bumper. Continue routing the chain back through the right rear shelter lift ring and back to the grab hook. Place the correct link from Table 2-8 in the grab hook. Repeat the procedure using the left sling leg chain, left rear shelter lift ring, and the left lift provision located on the end of the bumper.
5. Remove all the excess slack between the lift provisions and the shelter lift rings.
6. Secure all excess chain with tape or Type III nylon cord.
7. Cluster and tie (breakaway technique) the sling legs in each sling set on top of the vehicle to prevent entanglement during hookup and lift-off.

Figure 2-7. LMS Shelter Mounted on M1097 /M1097A2 Using Shelter Lift Rings as Sling Guides

CAUTION

Do not use the lift shackles located near the center of the rear bumper for sling load lift provisions.

M1113 TRUCK, UTILITY, EXPANDED CAPACITY (HMMWV) WITH LIGHTWEIGHT MULTIPURPOSE SHELTER (LMS) USING SHELTER LIFT RINGS AS SLING GUIDES

2-10. The M1113 truck, utility, expanded capacity with lightweight multipurpose shelter using shelter lift rings as sling guides is rigged for dual-point sling load using the following procedures:

- **Applicability**. The following items in Table 2-9 are certified for the helicopter(s) listed in the following table by the US Army Natick Soldier Center:

Table 2-9. M1113 Truck with Lightweight Multipurpose Shelter using Shelter Lift Rings as Sling Guides

Nomenclature	*Max Weight (Pounds)*	*Sling Set*	*Link Count Front/Rear*	*Type of Aircraft*
AN/TTC-56 Single Shelter Switch (SSS)	11,500	25K	32/5	CH-47
Digital Topographic Support System-Light (DTSS-L), AN/TYQ-67 (V)1	11,500	25K	32/5	CH-47
Integrated System Control (ISYSCON), AN/TYQ-76-B, (V)1, (V)2, and Degraded configuration	11,500	25K	32/5	CH-47
Shadow Tactical Unmanned Aerial Vehicle (TUAV), Air Vehicle Transport (AVT)	11,500	25K	32/5	CH-47
Shadow Tactical Unmanned Aerial Vehicle (TUAV), Ground Control Station (GCS)	11,500	25K	32/5	CH-47
Shadow Tactical Unmanned Aerial Vehicle (TUAV), Maintenance Section Multifunctional (MSM)	11,500	25K	32/5	CH-47
Common Ground Station, Joint Surveillance Target Attack Radar (JSTAR) System (V)2	11,500	25K	32/5	CH-47
Trojan Spirit Lite (V)3 Support Vehicle, AN/TSQ-226(V)3	11,500	25K	32/5	CH-47
Tactical Airspace Integration System (TAIS), AN/TSQ-221	11,500	25K	32/5	CH-47
Meteorological Measuring System-Profiler, AN/TMQ-52	11,500	25K	32/5	CH-47
IMETS AN/TMQ-40C and AN/TMQ-40D	11,500	25K	32/5	CH-47

- **Materials.** The following materials are required to rig this load:
  - Sling set (25,000-pound capacity) with one additional apex fitting.
    - Chain length, part number 38850-00053-102, from a 25,000-pound capacity sling set (4 each).
    - Coupling link, part number 5779135, from a 25,000-pound capacity sling set (4 each).
  - Tape, adhesive, pressure-sensitive, 2-inch wide roll.
  - Cord, nylon, Type III, 550-pound breaking strength.
  - Webbing, cotton, 1/4-inch, 80-pound breaking strength.
- **Personnel.** Two persons can prepare and rig this load in 20 minutes.
- **Procedures.** The following procedures apply to this load:
  - **Preparation.** Prepare the load using the following steps:
    - Extend the sling leg chains by connecting one additional chain length to each chain on a 25,000-pound capacity sling set with coupling links.
    - Fold mirrors forward in front of the windshield for added protection and tie together with Type III nylon cord.

- Secure all equipment inside the shelter with tape, nylon cord, or lashings; close and secure shelter vents and door with nylon cord or tape.
- Secure environmental control unit cover with duct tape.
- Disconnect the power cord from the rear panel and secure it to the rear platform with Type III nylon cord. Lower the power panel door and secure the door.
- Secure all equipment and cargo inside the vehicle with tape, nylon cord, or lashings. Secure the doors shut if installed.
- Ensure the fuel tank is not over 3/4 full. Inspect fuel tank cap, oil filler cap, and battery caps for proper installation.
- Engage the vehicle parking brake and put the transmission in neutral.
- Ensure the front wheels are pointed straight ahead. Tie down the steering wheel, using the securing device attached under the dashboard.
- Tape the windshield in an X formation from corner to corner.
- Install the lift provisions on the outer ends of the rear bumper.
- Tie the shelter's rear lift rings together across the top of the shelter with Type III nylon cord. Place the rings in the up position facing the front of the vehicle.

- **Rigging.** Rig the load according to the steps in Figure 2-8.
- **Hookup.** The hookup team stands on top of the shelter. The static wand person discharges the static electricity with the static wand. The forward hookup person places apex fitting 1 onto the forward cargo hook. The aft hookup person places apex fitting 2 onto the aft cargo hook. The hookup team then carefully dismounts the vehicle and remains close to the load as the helicopter removes slack from the sling legs. When successful hookup is assured, the hookup team quickly exits the area underneath the helicopter to the designated rendezvous point.
- **Derigging.** Derigging is the reverse of the preparation and rigging procedures.

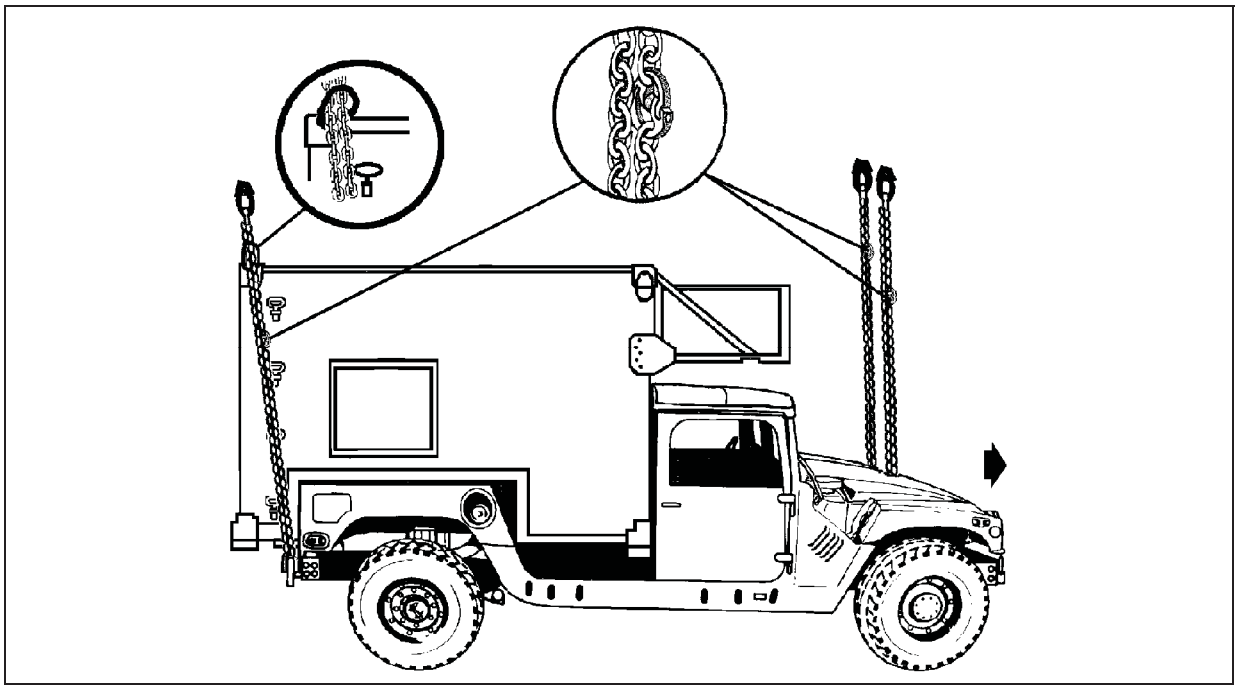

Figure 2-8. LMS Shelter Mounted on M1113 using Shelter Lift Rings as Sling Guides

RIGGING STEPS
1. Connect 2 sling legs to apex fitting number 1. Position the apex fitting on top of the shelter. 2. Loop the chain end of the sling legs through their respective lift provisions that protrudes through the hood. Place the correct link from Table 2-9 in the grab hook. 3. Connect 2 sling legs to apex fitting number 2. Position the apex fitting on top of the shelter. 4. Route the right sling leg chain through the right rear shelter lift ring to the right rear lift provision located on the outer end of the rear bumper. Continue routing the chain back through the right rear shelter lift ring and back to the grab hook. Place the correct link from Table 2-9 in the grab hook. Repeat the procedure using the left sling leg chain, left rear shelter lift ring, and the left lift provision located on the end of the bumper. 5. Remove all the excess slack between the lift provisions and the shelter lift rings. 6. Secure all excess chain with tape or Type III nylon cord. 7. Cluster and tie (breakaway technique) the sling legs in each sling set on top of the vehicle to prevent entanglement during hookup and lift-off.

Figure 2-8. LMS Shelter Mounted on M1113 using Shelter Lift Rings as Sling Guides (Continued)

CAUTION

Do not use the lift shackles located near the center of the rear bumper for sling load lift provisions.

M1097/M1113 SHELTER CARRIER (HMMWV) WITH GITCHNER MODEL 1497A SHELTER

2-11. The M1097/M1113 shelter carrier with Gitchner model 1497A shelter is rigged for dual-point sling load using the following procedures:

- **Applicability**. The following items in Table 2-10 are certified for the helicopter(s) listed in the following table by the US Army Natick Soldier Center:

Table 2-10. M1097/M1113 Shelter Carrier with Gitchner Model 1497A Shelter

Nomenclature	*Max Weight (Pounds)*	*Sling Set*	*Link Count Front/Rear*	*Type of Aircraft*
Joint Tactical Information Distribution System (JTIDS), AN/TYQ-JTIDS Shelter on M1097 HMMWV	10,000	10K	30/3	CH-47
AN/TSM-210 Electronic Shop on M1113 HMMWV	10,360	25K	24/5	CH-47
Deployable Print Production Center	11,145	25K 15K	5/32 3/40	CH-47 CH-53

- **Materials.** The following materials are required to rig this load:
  - Sling set (see table) with one additional apex fitting.
    - Chain length, for the sling set being used (4 each) (8 each for 15K).
    - Coupling link, for the sling set being used (4 each) (8 each for 15K).
  - Tape, adhesive, pressure-sensitive, 2-inch wide roll.
  - Cord, nylon, Type III, 550-pound breaking strength.
  - Webbing, cotton, 1/4-inch, 80-pound breaking strength.
  - Felt sheet, cattle hair, Type IV, 1/2-inch or suitable padding.
  - Padding, cellulose.
- **Personnel.** Two persons can prepare and rig this load in 15 minutes.
- **Procedures.** The following procedures apply to this load:
  - **Preparation.** Prepare the load using the following steps:
    - Extend the sling leg chains by connecting one additional chain length to each chain on a 10,000- or 25,000-pound capacity sling set and two chain lengths to each chain on the 15,000-pound capacity sling set with coupling links.
    - Fold mirrors forward in front of the windshield for added protection and tie together with Type III nylon cord.
    - Secure all equipment inside the shelter with tape, nylon cord, or lashings; close and secure shelter vents and door with nylon cord or tape.
    - Secure environmental control unit cover with duct tape.
    - Disconnect the power cord from the rear panel and secure it to the rear platform with Type III nylon cord. Lower the power panel door and secure the door.
    - Secure all equipment and cargo inside the vehicle with tape, nylon cord, or lashings. Secure the doors shut if installed.
    - Ensure the fuel tank is not over 3/4 full. Inspect fuel tank cap, oil filler cap, and battery caps for proper installation.
    - Engage the vehicle parking brake and put the transmission in neutral.
    - Ensure the front wheels are pointed straight ahead. Tie down the steering wheel, using the securing device attached under the dashboard.
    - Tape the windshield in an X formation from corner to corner.
    - Install the lift provisions on the outer ends of the rear bumper.
  - **Rigging.** Rig the load according to the steps in Figure 2-9.
  - **Hookup.** The hookup team stands on top of the shelter. The static wand person discharges the static electricity with the static wand. The forward hookup person places apex fitting 1 onto the forward cargo hook. The aft hookup person places apex fitting 2 onto the aft cargo hook. The hookup team then carefully dismounts the vehicle and remains close to the load as the helicopter removes slack from the sling legs. When successful hookup is assured, the hookup team quickly exits the area underneath the helicopter to the designated rendezvous point.
  - **Derigging.** Derigging is the reverse of the preparation and rigging procedures.

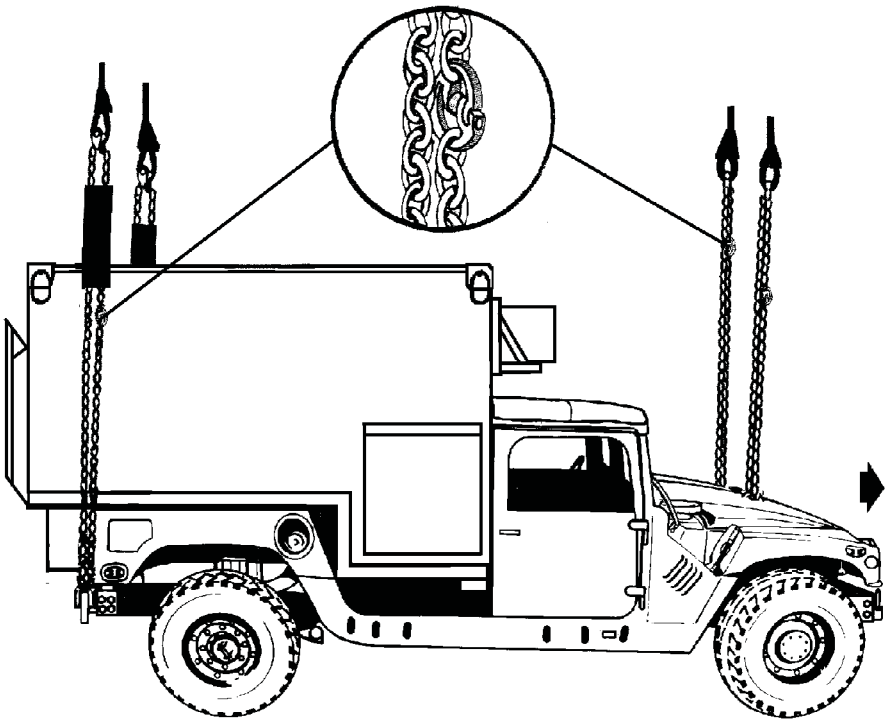

RIGGING STEPS

1. Connect 2 sling legs to apex fitting number 1. Position the apex fitting on top of the shelter.
2. Loop the chain end of the sling legs through their respective lift provisions that protrudes through the hood. Place the correct link from Table 2-10 in the grab hook.
3. Connect 2 sling legs to apex fitting number 2. Position the apex fitting on top of the shelter.
4. Loop the chain end of the sling legs through their respective lift provisions located on the outer ends of the rear bumper. Place the correct link from Table 2-10 in the grab hook.
5. Wrap the rear slings with padding where they contact the shelter sides.
6. Secure all excess chain with tape or Type III nylon cord.
7. Cluster and tie (breakaway technique) the sling legs in each sling set on top of the vehicle to prevent entanglement during hookup and lift-off.

Figure 2-9. M1097/M1113 Shelter Carrier with Gitchner Model 1497A Shelter

CAUTION

Do not use the lift shackles located near the center of the rear bumper for sling load lift provisions.

M1097A2 SHELTER CARRIER (HMMWV) WITH SPECIAL OPERATIONS MEDIA SYSTEM (SOMS-B) IN S-788G SHELTER (LMS)

2-12. The M1097A2 shelter carrier with special operations media system in S-788G shelter is rigged for dual-point sling load using the following procedures:

- **Applicability**. The following item in Table 2-11 is certified for the helicopter(s) listed in the following table by the US Army Natick Soldier Center:

Table 2-11. M1097A2 Shelter Carrier with Special Operations Media System in S-788G Shelter

Nomenclature	*Max Weight (Pounds)*	*Sling Set*	*Link Count Front/Rear*	*Type of Aircraft*
Special Operations Media System	9,080	10K	50/3	CH-47

- **Materials.** The following materials are required to rig this load:
  - Sling set (10,000-pound capacity) with one additional apex fitting.
    - Chain length, part number 38850-00053-101, from a 10,000-pound capacity sling set (4 each).
    - Coupling link, part number 5779125, from a 10,000-pound capacity sling set (4 each).
  - Tape, adhesive, pressure-sensitive, 2-inch wide roll.
  - Cord, nylon, Type III, 550-pound breaking strength.
  - Webbing, cotton, 1/4-inch, 80-pound breaking strength.
- **Personnel.** Two persons can prepare and rig this load in 20 minutes.
- **Procedures.** The following procedures apply to this load:
  - **Preparation.** Prepare the load using the following steps:
    - Extend the sling leg chains by connecting one additional chain length to each chain on a 10,000-pound capacity sling set with coupling links.
    - Fold mirrors forward in front of the windshield for added protection and tie together with Type III nylon cord.
    - Secure all equipment inside the shelter with tape, nylon cord, or lashings; close and secure shelter vents and door with nylon cord or tape.
    - Secure environmental control unit cover with duct tape.
    - Disconnect the power cord from the rear panel and secure it to the rear platform with Type III nylon cord. Lower the power panel door and secure the door.
    - Secure all equipment and cargo inside the vehicle with tape, nylon cord, or lashings. Secure the doors shut if installed.
    - Ensure the fuel tank is not over 3/4 full. Inspect fuel tank cap, oil filler cap, and battery caps for proper installation.
    - Engage the vehicle parking brake and put the transmission in neutral.
    - Ensure the front wheels are pointed straight ahead. Tie down the steering wheel, using the securing device attached under the dashboard.
    - Tape the windshield in an X formation from corner to corner.
    - Install the lift provisions on the outer ends of the rear bumper.
    - Tie the shelter's rear lift rings together across the top of the shelter with Type III nylon cord. Place the rings in the up position facing the front of the vehicle.
  - **Rigging.** Rig the load according to the steps in Figure 2-10.

***Note*:** Ensure the chains on the left rear sling leg are routed between the shelter and the 30 meter mast.

- **Hookup.** The hookup team stands on top of the shelter. The static wand person discharges the static electricity with the static wand. The forward hookup person places apex fitting 1 onto the forward cargo hook. The aft hookup person places apex fitting 2 onto the aft cargo hook. The hookup team then carefully dismounts the vehicle and remains close to the load as the helicopter removes slack from the sling legs. When successful hookup is assured, the hookup team quickly exits the area underneath the helicopter to the designated rendezvous point.

***Note*:** Hookup of this load presents substantial risk of damage to the load or injury to the hookup personnel. Use of a reach pendant is recommended for this load.

- **Derigging.** Derigging is the reverse of the preparation and rigging procedures.

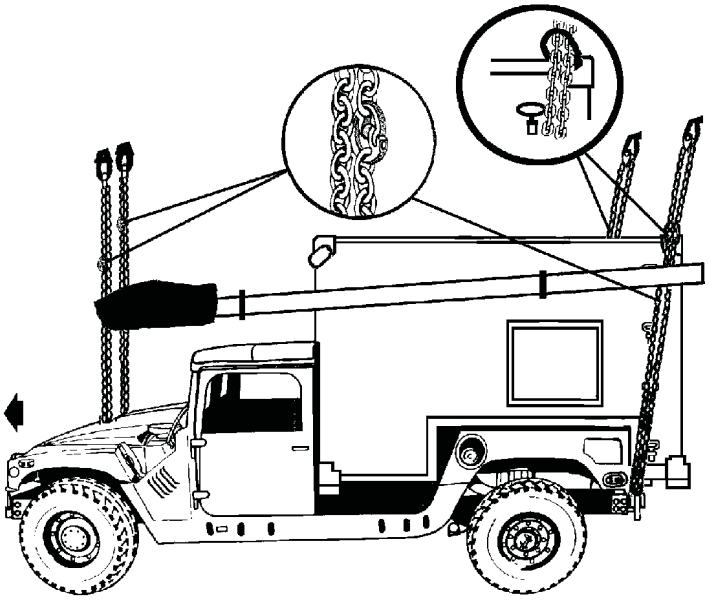

RIGGING STEPS

1. Connect 2 sling legs to apex fitting number 1. Position the apex fitting on top of the shelter.
2. Loop the chain end of the sling legs through their respective lift provisions that protrudes through the hood. Place the correct link from Table 2-11 in the grab hook.
3. Connect 2 sling legs to apex fitting number 2. Position the apex fitting on top of the shelter.
4. Route the right sling leg chain through the right rear shelter lift ring to the right rear lift provision located on the outer end of the rear bumper. Continue routing the chain back through the right rear shelter lift ring and back to the grab hook. Place the correct link from Table 2-11 in the grab hook. Repeat the procedure using the left sling leg chain, left rear shelter lift ring, and the left lift provision located on the end of the bumper.

Figure 2-10. M1097A2 Shelter Carrier with Special Operations Media System in S-788G Shelter

RIGGING STEPS (Continued)
5. Remove all the excess slack between the lift provisions and the shelter lift rings. 6. Secure all excess chain with tape or Type III nylon cord. 7. Cluster and tie (breakaway technique) the sling legs in each sling set on top of the vehicle to prevent entanglement during hookup and lift-off.

Figure 2-10. M1097A2 Shelter Carrier with Special Operations Media System in S-788G Shelter (Continued)

CAUTION

Do not use the lift shackles located near the center of the rear bumper for sling load lift provisions.

M1097A1 (HMMWV) WITH TACTICAL DATA NETWORK (TDN)-GATEWAY (USMC)

2-13. The M1097A1 with tactical data network gateway shelter is rigged for dual-point sling load using the following procedures:

- **Applicability**. The following item in Table 2-12 is certified for the helicopter(s) listed in the following table by the US Army Natick Soldier Center:

Table 2-12. M1097A1 with Tactical Data Network Gateway Shelter

Nomenclature	*Max Weight (Pounds)*	*Sling Set*	*Link Count Front/Rear*	*Type of Aircraft*
Tactical Data Network-Gateway on M1097A1	9,580	15K	30/3	CH-53

- **Materials.** The following materials are required to rig this load:
  - Sling set, multileg with one additional web ring.
    - Chain length, from a multileg sling set (8 each).
    - Coupling link, from a 15,000-pound capacity sling set (8 each).
  - Tape, adhesive, pressure-sensitive, 2-inch wide roll.
  - Cord, nylon, Type III, 550-pound breaking strength.
  - Webbing, cotton, 1/4-inch, 80-pound breaking strength.
- **Personnel.** Two persons can prepare and rig this load in 15 minutes.
- **Procedures.** The following procedures apply to this load:
  - **Preparation.** Prepare the load using the following steps:
    - Extend the sling leg chains by connecting two additional chain lengths to each chain on a multileg sling set with coupling links.
    - Fold mirrors forward inward and tie together with Type III nylon cord.
    - Secure all equipment inside the shelter with tape, Type III nylon cord, or tiedown straps. Close and secure all doors and vents with tape or Type III nylon cord.

- Secure all equipment and cargo inside the vehicle with tape, nylon cord, or lashings. Secure the doors shut if installed.
- Ensure the fuel tank is not over 3/4 full. Inspect fuel tank cap, oil filler cap, and battery caps for proper installation.
- Engage the vehicle parking brake and put the transmission in neutral.
- Ensure the front wheels are pointed straight ahead. Tie down the steering wheel, using the securing device attached under the dashboard.
- Tape the windshield in an X formation from corner to corner.
- Secure the rear lift provisions in the up position with Type III nylon cord.

- **Rigging.** Rig the load according to the steps in Figure 2-11.
- **Hookup.** The hookup team stands on top of the vehicle. The static wand person discharges the static electricity with the static wand. The forward hookup person places apex fitting 1 onto the forward cargo hook. The aft hookup person places apex fitting 2 onto the aft cargo hook. The hookup team then carefully dismounts the vehicle and remains close to the load as the helicopter removes slack from the sling legs. When successful hookup is assured, the hookup team quickly exits the area underneath the helicopter to the designated rendezvous point.
- **Derigging.** Derigging is the reverse of the preparation and rigging procedures.

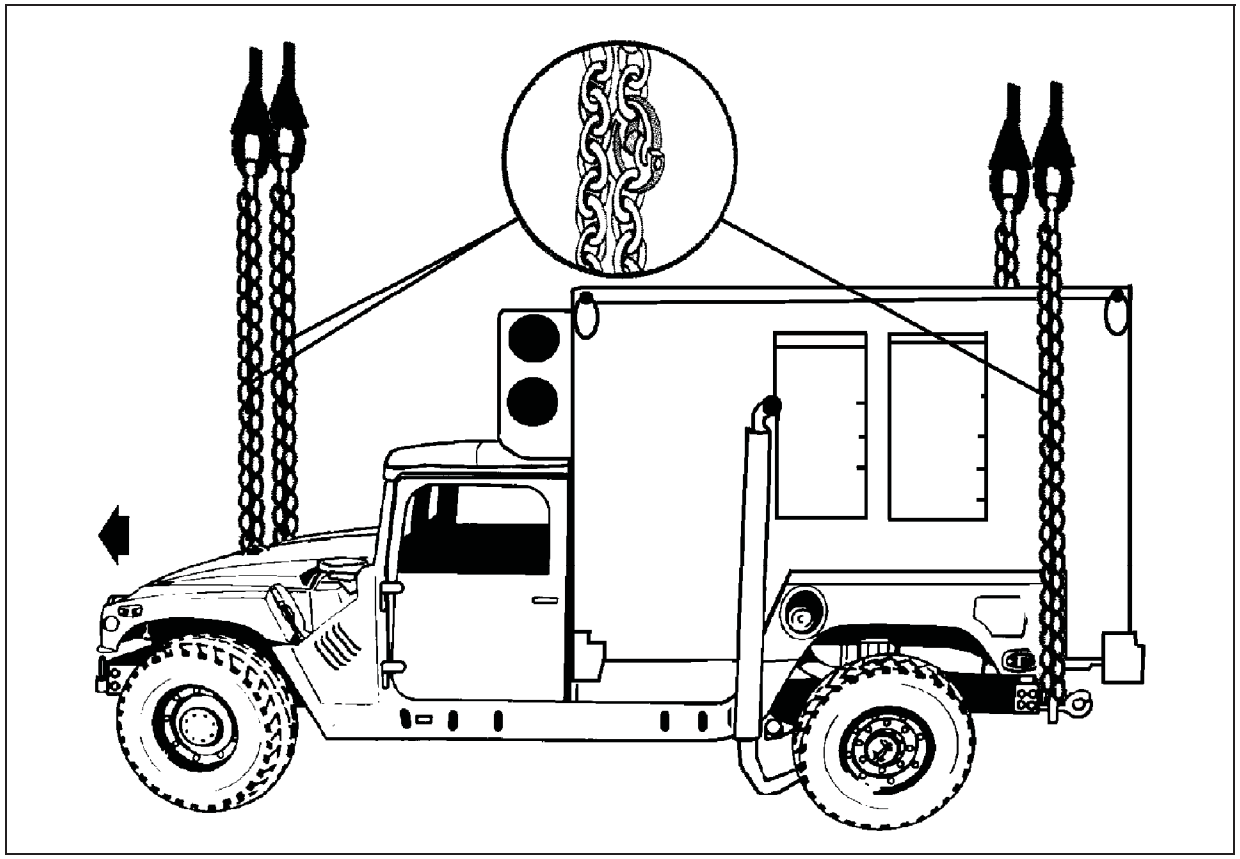

Figure 2-11. M1097A1 with Tactical Data Network Gateway Shelter

RIGGING STEPS
1. Connect 2 sling legs to web ring number 1. Position the web ring on top of the vehicle. 2. Loop the chain end of the sling legs through their respective lift provisions that protrudes through the hood. Place the correct link from Table 2-12 in the grab hook. Secure all excess chain with tape or Type III nylon cord. 3. Connect 2 sling legs to web ring number 2. Position the web ring on top of the shelter. 4. Loop the chain end through the respective lift provision located on the outside end of the bumper. Place the correct links from Table 2-12 in the grab hooks. Secure all excess chain with tape or Type III nylon cord. 5. Cluster and tie (breakaway technique) the sling legs in each sling set on top of the vehicle to prevent entanglement during hookup and lift-off.

Figure 2-11. M1097A1 with Tactical Data Network Gateway Shelter (Continued)

CAUTION

Do not use the lift shackles located near the center of the rear bumper for sling load lift provisions.

M1037/M1097 SHELTER CARRIER (HMMWV) WITH G15840 SMOKE GENERATOR SET, M157/M157A1E1

2-14. The M1037/M1097 shelter carrier with G15840 smoke generator set, M157/M157A1E1 is rigged for dual-point sling load using the following procedures:

- **Applicability**. The following items in Table 2-13 are certified for the helicopter(s) listed in the following table by the US Army Natick Soldier Center:

Table 2-13. M1037/M1097 Shelter Carrier with G15840 Smoke Generator Set, M157/M157A1E1

Nomenclature	*Max Weight (Pounds)*	*Sling Set*	*Link Count Front/Rear*	*Type of Aircraft*
Smoke, Generator Set, M157 on M1037	7,400	10K	40/3	CH-47
Smoke, Generator Set, M157 on M1097	8,025	10K	40/3	CH-47
Smoke, Generator Set, M157A1E1 on M1097	8,035	10K	40/3	CH-47

- **Materials.** The following materials are required to rig this load.
  - Sling set (10,000-pound capacity) with one additional apex fitting.
  - Tape, adhesive, pressure-sensitive, 2-inch wide roll.
  - Cord, nylon, Type III, 550-pound breaking strength.
  - Webbing, cotton, 1/4-inch, 80-pound breaking strength.
  - Felt sheet, cattle hair, Type IV, 1/2-inch or suitable padding.
- **Personnel.** Two persons can prepare and rig this load in 15 minutes.

- **Procedures.** The following procedures apply to this load:
  - **Preparation.** Prepare the load using the following steps:
    - Fold mirrors forward in front of the windshield for added protection and tie together with Type III nylon cord.
    - Secure all equipment and cargo inside the vehicle with tape, nylon cord, or lashings. Secure the doors shut if installed.
    - Ensure the fuel tank is not over 3/4 full. Inspect fuel tank cap, oil filler cap, and battery caps for proper installation.
    - Engage the vehicle parking brake and put the transmission in neutral.
    - Ensure the front wheels are pointed straight ahead. Tie down the steering wheel, using the securing device attached under the dashboard.
    - Tape the windshield in an X formation from corner to corner.
    - Install the lift provisions on the outer ends of the rear bumper.
  - **Rigging.** Rig the load according to the steps in Figure 2-12.
  - **Hookup.** The hookup team stands in the bed of the vehicle. The static wand person discharges the static electricity with the static wand. The forward hookup person places apex fitting 1 onto the forward cargo hook. The aft hookup person places apex fitting 2 onto the aft cargo hook. The hookup team then carefully dismounts the vehicle and remains close to the load as the helicopter removes slack from the sling legs. When successful hookup is assured, the hookup team quickly exits the area underneath the helicopter to the designated rendezvous point.
  - **Derigging.** Derigging is the reverse of the preparation and rigging procedures.

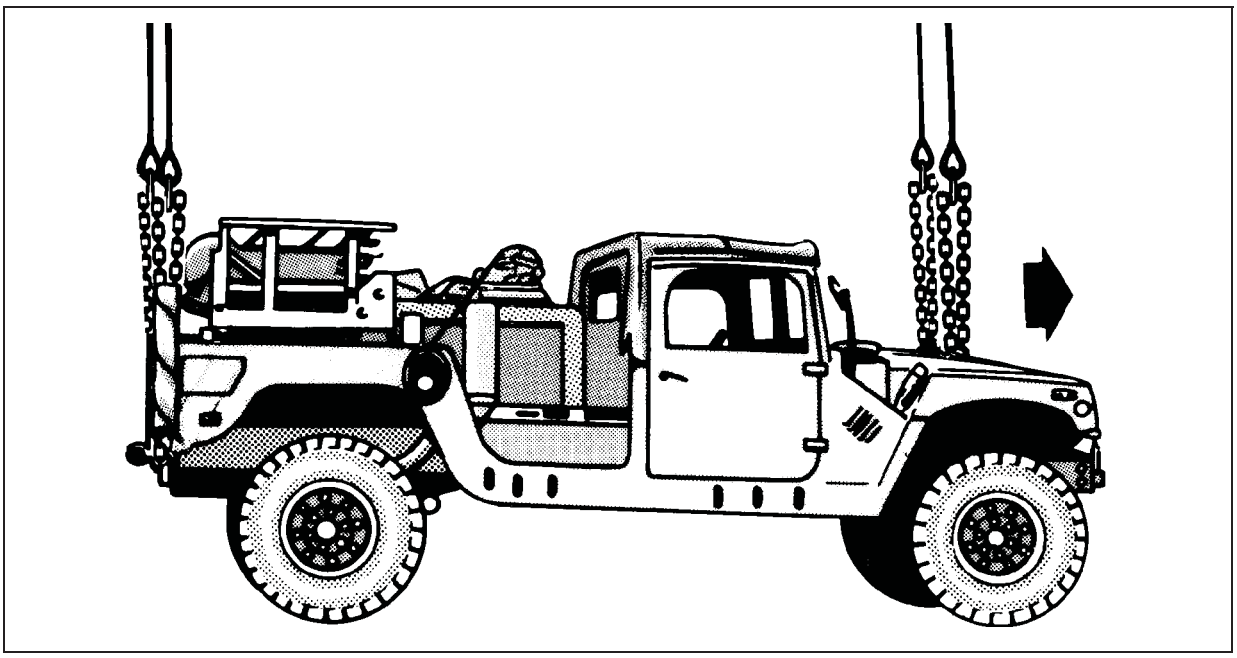

Figure 2-12. M1037/M1097 Shelter Carrier with G15840 Smoke Generator Set, M157/M157A1E1

RIGGING STEPS

1. Connect 2 sling legs to apex fitting number 1. Position the apex fitting on the hood of the vehicle.
2. Loop the chain end of the sling legs through their respective lift provisions that protrudes through the hood. Place the correct link from Table 2-13 in the grab hook.
3. Connect 2 sling legs to apex fitting number 2. Position the apex fitting on top of the smoke generator.
4. Loop the chain end of the sling legs through their respective lift provisions located on the outer ends of the rear bumper. Place the correct link from Table 2-13 in the grab hook.
5. Wrap the rear slings with padding where they contact the vehicle sides.
6. Secure all excess chain with tape or Type III nylon cord.
7. Cluster and tie (breakaway technique) the sling legs in each sling set on top of the vehicle to prevent entanglement during hookup and lift-off.

Figure 2-12. M1037/M1097 Shelter Carrier with G15840 Smoke Generator Set, M157/M157A1E1 (Continued)

CAUTION

Do not use the lift shackles located near the center of the rear bumper for sling load lift provisions.

M1113 (HMMWV) WITH M56 SMOKE GENERATING SYSTEM

2-15. The M1113 with M56 smoke generating system is rigged for dual-point sling load using the following procedures:

- **Applicability**. The following items in Table 2-14 are certified for the helicopter(s) listed in the following table by the US Army Natick Soldier Center:

Table 2-14. M1113 with M56 Smoke Generating System

Nomenclature	*Max Weight (Pounds)*	*Sling Set*	*Link Count Front/Rear*	*Type of Aircraft*
M1113 with M56 Smoke Generating System without Graphite in Tank	9,400	10K	50/3	CH-47
M1113 with M56 Smoke Generating System with Graphite in Tank	9,400	10K	50 Front 3 Right Rear 14 Left Rear	CH-47

- **Materials.** The following materials are required to rig this load:
  - Sling set (10,000-pound capacity) with one additional apex fitting.
  - Tape, adhesive, pressure-sensitive, 2-inch wide roll.

- Cord, nylon, Type III, 550-pound breaking strength.
- Webbing, cotton, 1/4-inch, 80-pound breaking strength.
- Felt sheet, cattle hair, Type IV, 1/2-inch or suitable padding.
- Spreader bar, ambulance, NSN 4910-01-313-8839.

- **Personnel.** Two persons can prepare and rig this load in 10 minutes.
- **Procedures.** The following procedures apply to this load:
  - **Preparation.** Prepare the load using the following steps:
    - Place the transmission in neutral and set the parking brake.
    - Ensure the fuel tank, the turbine fuel, and both fog oil tanks are not over 3/4 full.
    - Set the three-way valve to the OFF position.
    - Ensure the IR hopper cover latches are securely closed and the auxiliary hoses are attached to the mounting bracket at the forward end of the inboard fog oil tank.
    - Secure all latches and doors with tape or Type III nylon cord.
    - Ensure the front wheels are pointed straight ahead. Tie down the steering wheel, using the securing device attached under the dashboard.
    - Fold the mirrors inward. Remove the doors and store and secure the doors in the cab with lashings or Type III nylon cord.
    - Ensure the fuel tank is not over 3/4 full. Inspect fuel tank cap, oil filler cap, and battery caps for proper installation.
    - Extend the spreader bar until the holes line up. Install the pin and engage the keeper.
    - Position the spreader bar across the rear of the vehicle, resting on the power module and the weapons case. Attach the two spreader bar check cables to the larger hole openings, footman's loop, on the vehicle fenders.
  - **Rigging.** Rig the load according to the steps in Figure 2-13.
  - **Hookup.** The hookup team stands on the IR hopper-loading platform on the left side of the vehicle. The static wand person discharges the static electricity with the static wand. The forward hookup person places apex fitting 1 onto the forward cargo hook. The aft hookup person places apex fitting 2 onto the aft cargo hook. The hookup team then carefully dismounts the vehicle and remains close to the load as the helicopter removes slack from the sling legs. When successful hookup is assured, the hookup team quickly exits the area underneath the helicopter to the designated rendezvous point.
  - **Derigging**. Derigging is the reverse of the preparation and rigging procedures.

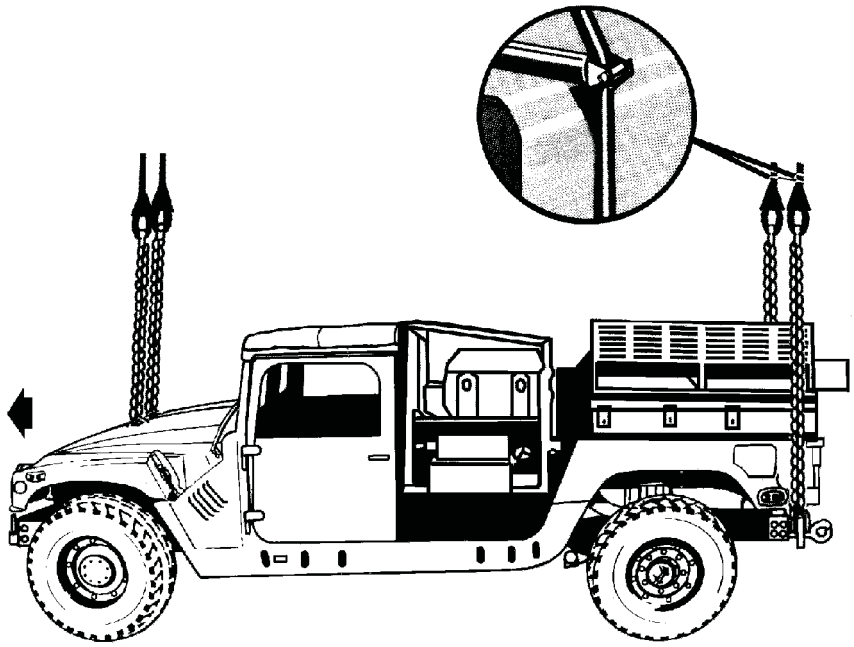

RIGGING STEPS

1. Connect 2 sling legs to apex fitting number 1. Position the apex fitting on top of the IR hopper or on the forward end of the fog oil tanks.

2. Loop the chain end of the sling legs through their respective lift provisions. Place the correct link from Table 2-14 in the grab hook. Secure the excess chain with tape or Type III nylon cord.

3. Connect 2 sling legs to apex fitting number 2. Position the apex fitting on top of the IR hopper or on the forward end of the fog oil tanks.

4. Place the nylon rope of sling legs 3 and 4 in the guides on the end of the spreader bar. Loop the chain end of the sling legs through their respective lift provision located on the outside end of the rear bumper. Place the correct link from Table 2-14 in the grab hook.

5. Pad the slings where they contact the vehicle.

6. Cluster and tie (breakaway technique) the sling legs in each sling set on top of the load to prevent entanglement during hookup and lift-off.

Figure 2-13. M1113 with M56 Smoke Generating System

CAUTION

Do not use the lift shackles located near the center of the rear bumper for sling load lift provisions.

DUAL M56 SMOKE GENERATING SYSTEMS ON M1113 HMMWV, SIDE BY SIDE (SHOTGUN METHOD)

2-16. The dual M56 smoke generating systems on M1113, side by side is rigged for dual-point sling load using the following procedures:

- **Applicability**. The following item in Table 2-15 is certified for the helicopter(s) listed in the following table by the US Army Natick Soldier Center:

Table 2-15. Dual M56 Smoke Generating Systems on M1113, Side by Side

Nomenclature	*Max Weight (Pounds)*	*Sling Set*	*Link Count Front/Rear*	*Type of Aircraft*
M56 Smoke Generating System on M1113	9,387	10K	Listed in Rigging Procedures	CH-47

- **Materials.** The following materials are required to rig this load:
  - Sling set (10,000-pound capacity) (2 each).
    - Additional chain length, part number 38850-00053-101, from a 10,000-pound capacity sling set (8 each).
    - Additional coupling link, part number 5779125, from a 10,000-pound capacity sling set (8 each).
  - Tape, adhesive, pressure-sensitive, 2-inch wide roll.
  - Cord, nylon, Type III, 550-pound breaking strength.
  - Webbing, cotton, 1/4-inch, 80-pound breaking strength.
  - Strap, tiedown, cargo, CGU-1/B (4 each).
  - Spreader bar ambulance NSN 4910-01-313-8839 (2 each).
- **Personnel.** Four persons can prepare and rig this load in 20 minutes.
- **Procedures.** The following procedures apply to this load:
  - **Preparation.** Prepare the load using the following steps:
    - Fold mirrors inward and tie together with Type III nylon cord.
    - Secure all equipment and cargo inside the vehicles with tape, nylon cord, or lashings. Secure the doors shut, if installed.
    - Ensure the fuel tanks, turbine fuel, and both fog oil tanks are not over 3/4 full. Inspect the fuel tank caps, oil filler caps, and battery caps for proper installation.
    - Secure the vehicle camouflage net (in the bag) to each vehicle. Attach one camouflage net to the forward door post of one vehicle and the other camouflage net to the hard part of the body covering the fuel tank of the other vehicle.
    - Position the vehicles perpendicular to the direction of flight. The front of the vehicles face to the right side of the direction of flight. Position the vehicles, as close as possible, next to each other. Ensure both vehicles are facing in the same direction.
    - Engage the vehicle parking brakes and put the transmissions in neutral.
    - Ensure the front wheels are pointed straight ahead. Tie down the steering wheel, using the securing device attached under the dashboard or Type III nylon cord.
    - Set the three-way valve to the OFF position.
    - Tape the windshield and side windows with an X formation from corner to corner.
    - Ensure the IR hopper cover latches are securely closed and the auxiliary hoses are attached to the mounting bracket at the forward end of the inboard fog oil tank.

- Route a CGU-1/B cargo tiedown strap from the front inside tiedown on the front bumper of one vehicle, through the front inside tiedown of the other vehicle and connect the hooks together. Tighten the strap. Repeat the procedure with the front outer tiedowns.
- Route a CGU-1/B cargo tiedown strap from the rear inside lift shackle of one vehicle, through the rear inside lift shackle of the other vehicle and connect the hooks together. Tighten the strap. Repeat the procedure between the vehicle pintles.
- Extend the spreader bars until the holes line up. Install the pin and engage the keeper.
- Position the spreader bar across the rear of each vehicle resting on the power module and the weapons case.
- Extend each of the sling leg chains by connecting one additional chain length to each chain on the 10,000-pound capacity sling sets with coupling links.

■ **Rigging.** Rig the load according to the steps in Figure 2-14.

***Note*:** The front of this load is the side of the forward vehicle. The fronts of the vehicles face to the right side of the direction of flight.

■ **Hookup.** The hookup teams stand in the cargo bed and on the hood of the vehicles. The static wand person discharges the static electricity with the static wand. The forward hookup person places apex fitting 1 onto the forward cargo hook. The aft hookup person places apex fitting 2 onto the aft cargo hook. The hookup team then carefully dismounts the vehicle and remains close to the load as the helicopter removes slack from the sling legs. When successful hookup is assured, the hookup team quickly exits the area underneath the helicopter to the designated rendezvous point.

■ **Derigging.** Derigging is the reverse of the preparation and rigging procedures.

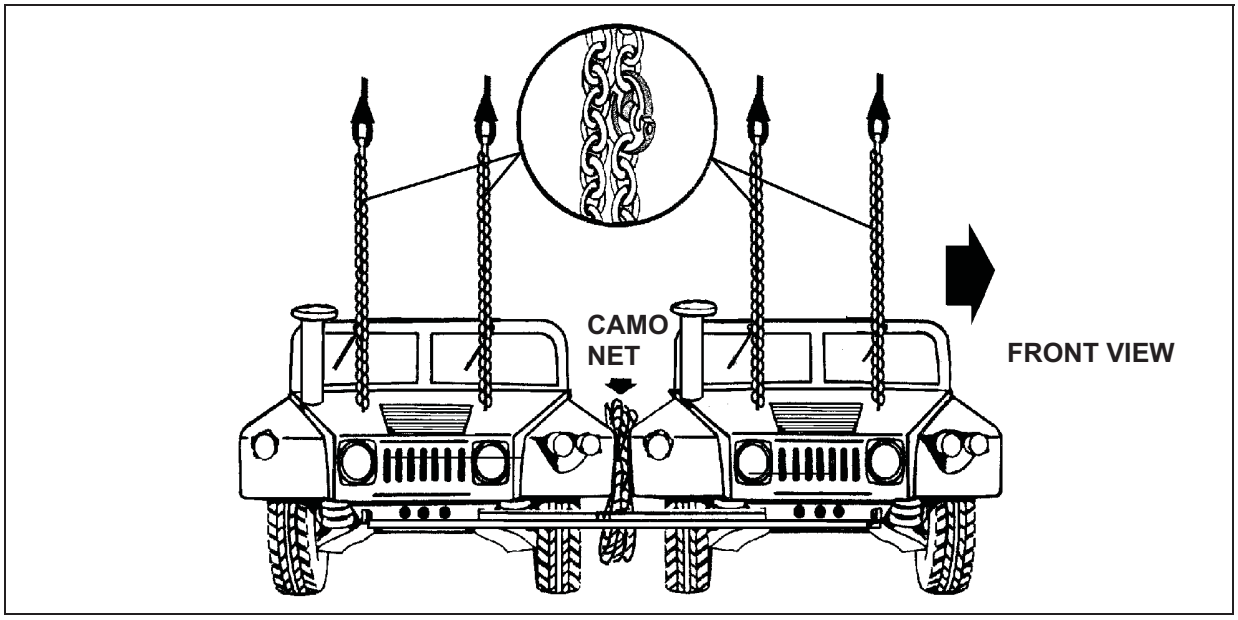

Figure 2-14. Dual M56 Smoke Generating Systems on M1113 HMMWV, Side by Side (Shotgun Method)

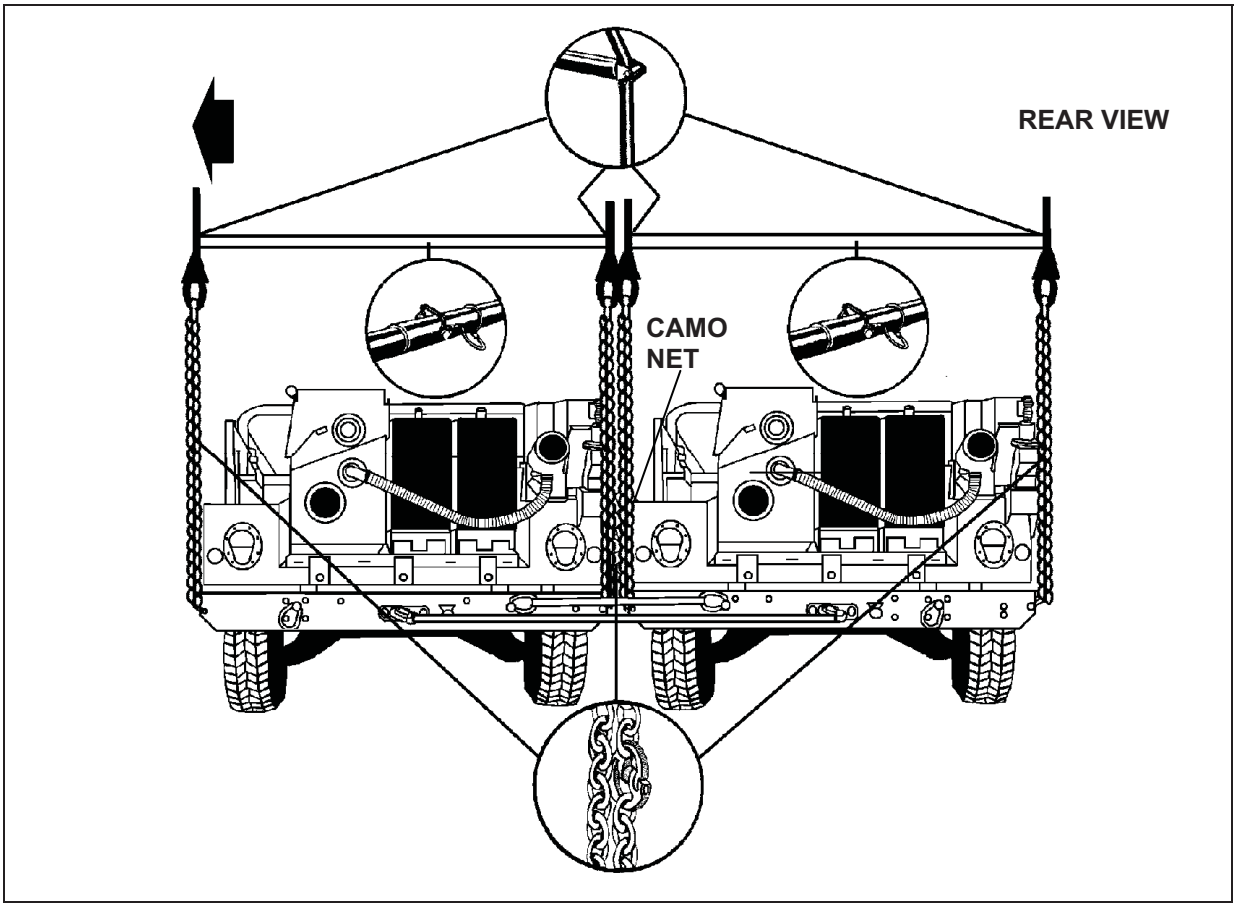

Figure 2-14. Dual M56 Smoke Generating Systems on M1113 HMMWV, Side by Side (Shotgun Method) (Continued)

RIGGING STEPS
1. Position one sling set on top of the IR hopper of the forward vehicle (with respect to the direction of flight). Route outer sling legs 1 and 2 to the front of the vehicle and inner sling legs 3 and 4 to the rear. Sling legs 1 and 3 must be on the left side of the vehicle. 2. Loop the chain end of sling leg 1 through the left front lift provision that protrudes through the hood from inboard to outboard. Place link 85 in the grab hook. Repeat with sling leg 2 and the right front lift provision. Place link 65 in the grab hook. Secure the excess chain with tape or Type III nylon cord. 3. Place the nylon rope portion of sling legs 3 and 4 in the guides on the end of the spreader bar. Loop the chain end of sling leg 3 through the lift provision located on the left end of the bumper from inboard to outboard. Place link 15 in the grab hook. Repeat with sling leg 4 and the right rear lift provision. Place link 15 in the grab hook. Secure the excess chain with tape or Type III nylon cord. 4. Position second sling set on top of the IR hopper of the rear vehicle (with respect to the direction of flight). Route outer sling legs 1 and 2 to the front of the vehicle and inner sling legs 3 and 4 to the rear. Sling legs 1 and 3 must be on the left side of the vehicle. 5. Loop the chain end of sling leg 1 through the left front lift provision that protrudes through the hood from inboard to outboard. Place link 65 in the grab hook. Repeat with sling leg 2 and the right front lift provision. Place link 85 in the grab hook. Secure the excess chain with tape or Type III nylon cord. 6. Place the nylon rope portion of sling legs 3 and 4 in the guides on the end of the spreader bar. Loop the chain end of sling leg 3 through the lift provision located on the left end of the bumper from inboard to outboard. Place link 5 in the grab hook. Repeat with sling leg 4 and the right rear lift provision. Place link 25 in the grab hook. Secure the excess chain with tape or Type III nylon cord. 7. Cluster and tie (breakaway technique) the sling legs in each sling set on top of the vehicle to prevent entanglement during hookup and lift-off.

Figure 2-14. Dual M56 Smoke Generating Systems on M1113 HMMWV, Side by Side (Shotgun Method) (Continued)

CAUTION

Do not use the lift shackles located near the center of the rear bumper for sling load lift provisions.

DUAL HMMWV, SIDE BY SIDE (SHOTGUN METHOD)

2-17. The dual HMMWVs, side by side are rigged for dual-point sling load using the following procedures:

- **Applicability**. The following items in Table 2-16 are certified for the helicopter(s) listed in the following table by the US Army Natick Soldier Center:

Table 2-16. Dual HMMWVs, Side by Side

Nomenclature	*Max Weight (Pounds)*	*Sling Set*	*Link Count Front/Rear*	*Type of Aircraft*
Cargo Troop Carrier, M998/M1038	8,400	10K 15K	Listed in Rigging Steps	CH-47 CH-53
Cargo Troop Carrier, M998A1/M1038A1	7,880	10K 15K	Listed in Rigging Steps	CH-47 CH-53
Armament Carrier, M1025/M1026/M1025A1/M1026A1/M1043/M1044	8,400	10K 15K	Listed in Rigging Steps	CH-47 CH-53
Armament Carrier, M1025A2	10,000	10K 15K	Listed in Rigging Steps	CH-47 CH-53
Armament Carrier, M1043A1/M1044A1	8,580	10K 15K	Listed in Rigging Steps	CH-47 CH-53
Armament Carrier, M1043A2	10,000	10K 15K	Listed in Rigging Steps	CH-47 CH-53
Tow Missile Carrier, M966/M966A1/M1036/M1045/M1046	8,400	10K 15K	Listed in Rigging Steps	CH-47 CH-53
Tow Missile Carrier, M1045A1/M1046A1	8,580	10K 15K	Listed in Rigging Steps	CH-47 CH-53
Tow Missile Carrier, M1045A2	10,000	10K 15K	Listed in Rigging Steps	CH-47 CH-53
M1037 Modified	9,400	10K 15K	Listed in Rigging Steps	CH-47 CH-53
Shelter Carrier, M1097/M1097A1/M1097A2	10,000	10K 15K	Listed in Rigging Steps	CH-47 CH-53
M1123 HMMWV	10,000	10K 15K	Listed in Rigging Steps	CH-47 CH-53

WARNINGS

1. Only HMMWVs with the 3/4-inch front lift provisions are certified for sling loading in the side by side (shotgun) method.
2. HMMWVs with a manufacturer's serial number of less than 100000 are equipped with the 5/8-inch front lift provisions by the manufacturer but can be changed to the 3/4-inch front lift provisions by qualified maintenance personnel. HMMWVs with manufacturer's serial number of 100000 or greater are equipped with the 3/4-inch front lift provisions by the manufacturer. Prior to sling loading HMMWVs in the side by side (shotgun) method, verify that the HMMWVs are equipped with 3/4-inch front lift provisions by checking the manufacturer's serial number or measuring the diameter of the front lift provision. The HMMWV manufacturer's serial number is located on a data plate on the lower right corner of the driver's side door opening.

CAUTION

DO NOT sling load (Shotgun Method) any HMMWV shelter carrier (M1097, M1037, etc.) with the shelter installed in the bed of the truck. Ensure all equipment in the bed of the truck is properly secured and does not interfere with the routing of the sling legs.

- **Materials.** The following materials are required to rig this load:
  - Sling set (10,000-pound capacity) (2 each).

    OR
  - Multileg sling set (15,000-pound capacity) for the CH-53 only.
  - Tape, adhesive, pressure-sensitive, 2-inch wide roll.
  - Cord, nylon, Type III, 550-pound breaking strength.
  - Webbing, cotton, 1/4-inch, 80-pound breaking strength.
  - Strap, tiedown, cargo, CGU-1/B (2 each).
- **Personnel.** Four persons can prepare and rig this load in 15 minutes.
- **Procedures.** The following procedures apply to this load:
  - **Preparation.** Prepare the load using the following steps:
    - Fold mirrors forward in front of the windshield for added protection and tie together with Type III nylon cord. Remove the canvas bedcovers from the vehicles. Fold and secure the canvas over the windshields with Type III nylon cord. Remove the doors and secure inside the vehicle.
    - Secure all equipment and cargo inside the vehicles with tape, nylon cord, or lashings.
    - Ensure the fuel tanks are not over 3/4 full. Inspect the fuel tank caps, oil filler caps, and battery caps for proper installation.
    - Secure the vehicle camouflage net (in the bag) to each vehicle. Attach one camouflage net to the forward door post of one vehicle and the other camouflage net to the hard part of the body covering the fuel tank of the other vehicle.
    - Position the vehicles, as close as possible, next to each other. Ensure both vehicles are facing in the same direction.
    - Engage the vehicle parking brakes and put the transmissions in neutral.
    - Ensure the front wheels are pointed straight ahead. Tie down the steering wheel, using the securing device attached under the dashboard.
  - **Rigging.** Rig the load according to the steps in Figure 2-15.
  - **Hookup**. The hookup teams stand in the cargo bed and on the hood of the vehicles. The static wand person discharges the static electricity with the static wand. The forward hookup person places apex fitting 1 onto the forward cargo hook. The aft hookup person places apex fitting 2 onto the aft cargo hook. The hookup team then carefully dismounts the vehicle and remains close to the load as the helicopter removes slack from the sling legs. When successful hookup is assured, the hookup team quickly exits the area underneath the helicopter to the designated rendezvous point.
  - **Derigging.** Derigging is the reverse of the preparation and rigging procedures.

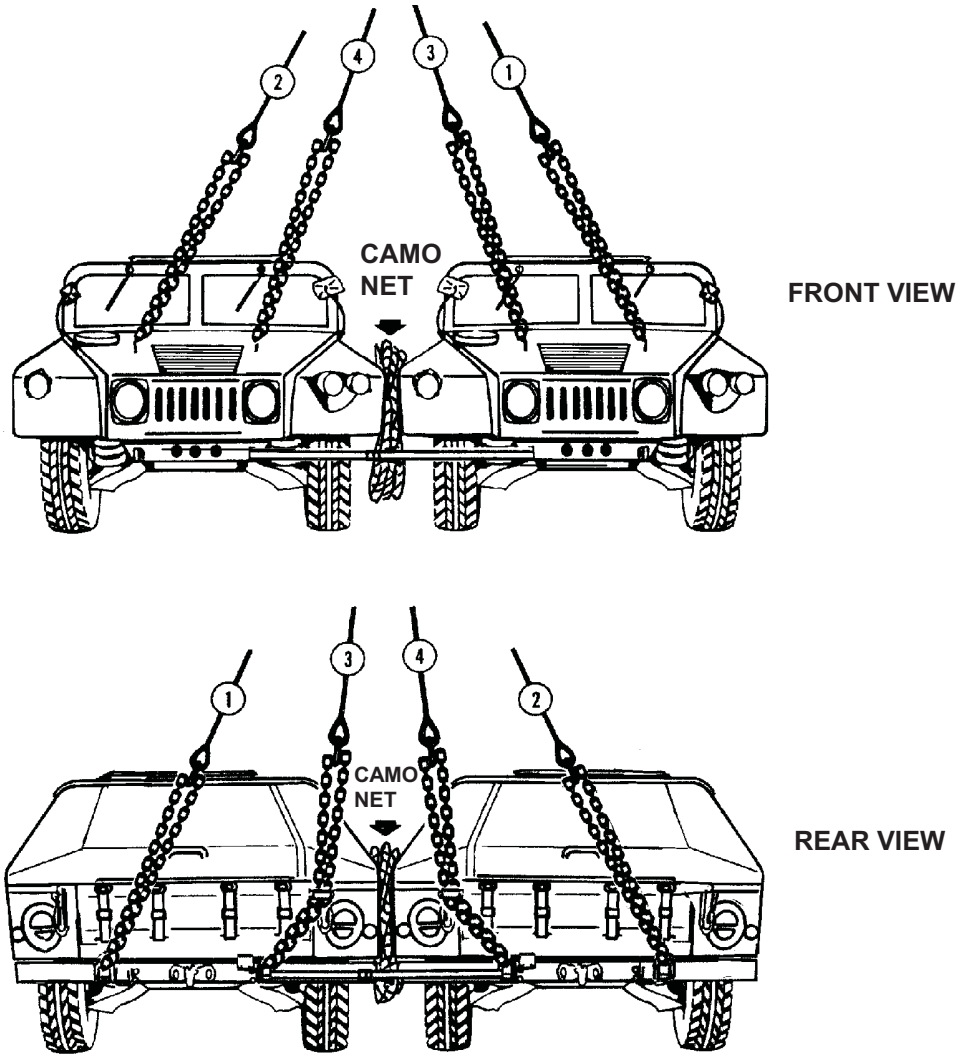

RIGGING STEPS

1. Position one sling set on the hood of one of the vehicles.
2. Loop the chain end of the outside sling legs through their respective outside lift provisions that protrude through the hoods of the vehicles. Place link 30 in the grab hooks.
3. Loop the chain end of the inside sling legs through their respective inside lift provisions that protrude through the hoods of the vehicles. Place link 50 in the grab hooks.
4. Position the other sling set in the bed or on the roof of one of the vehicles.
5. Loop the chain end of the outside sling legs through their respective lift shackle on the outside end of the rear bumper. Place link 3 in the grab hooks.

Figure 2-15. Dual HMMWVs, Side by Side

RIGGING STEPS (Continued)

CAUTION

Do not route the outside sling legs through the tailgate sling guides.

6. Route the chain ends of the inside sling legs through their respective inside tailgate guides. Loop the chain ends through their respective lift provisions located on the inside of the rear bumpers and back through the tailgate guides. Place link 7 in the grab hooks.

7. Secure all excess chain with tape or Type III nylon cord.

8. Cluster and tie (breakaway technique) the sling legs in each sling set on top of the vehicle to prevent entanglement during hookup and lift-off.

9. Route a CGU-1/B cargo tiedown strap from the front inside lift shackle of one vehicle, through the front inside lift shackle of the other vehicle and connect the hooks together. Tighten the strap.

10. Route a CGU-1/B cargo tiedown strap from the rear inside lift shackle of one vehicle, through the rear inside lift shackle of the other vehicle and connect the hooks together. Ensure the strap is positioned below the sling leg chains. Tighten the strap.

Figure 2-15. Dual HMMWVs, Side by Side (Continued)

M1097A1 (H-HMMWV) WITH FIBERGLASS CARGO BED COVER (CBC)

2-18. The M1097A1 with fiberglass cargo bed cover is rigged for dual-point sling load using the following procedures:

- **Applicability**. The following item in Table 2-17 is certified for the helicopter(s) listed in the following table by the US Army Natick Soldier Center:

Table 2-17. M1097A1 with Fiberglass Cargo Bed Cover

Nomenclature	*Max Weight (Pounds)*	*Sling Set*	*Link Count Front/Rear*	*Type of Aircraft*
Cargo Bed Cover, HMMWV Type I, Camouflage, NSN: 5411-01-647-3243	10,000	10K 15K	50/3 62/2	CH-47 CH-53
Cargo Bed Cover, HMMWV Type I, Sand, NSN: 5411-01-479-1928	10,000	10K 15K	50/3 62/2	CH-47 CH-53

- **Materials.** The following materials are required to rig this load:
  - Sling set (10,000-pound capacity) with one additional apex fitting.
    - Additional chain length, part number 38850-00053-101, from a 10,000-pound capacity sling set (4 each).
    - Additional coupling link, part number 5779125, from a 10,000-pound sling set (4 each).

OR

- Multileg sling set (15,000-pound capacity for the CH-53E only) with one additional web ring.
  - Additional chain lengths, part number 34080-4 (8 each).
  - Additional coupling links, part number 31611 (8 each).
- Tape, adhesive, pressure-sensitive, 2-inch wide roll.
- Cord, nylon, Type III, 550-pound breaking strength.
- Webbing, cotton, 1/4-inch, 80-pound breaking strength.
- Felt sheet, cattle hair, Type IV, 1/2-inch or suitable padding.

- **Personnel.** Two persons can prepare and rig this load in 15 minutes.
- **Procedures.** The following procedures apply to this load:
  - **Preparation.** Prepare the load using the following steps:
    - Extend the sling leg chains by connecting one additional chain length to each chain on a 10,000-pound capacity sling set with coupling links. Connect two additional chain lengths to each chain on the 15,000-pound multileg sling set chain with coupling links.
    - Fold mirrors forward in front of the windshield for added protection and tie together with Type III nylon cord.
    - Secure the cargo bed cover to the truck using wire rope or tie-down assemblies. Remove the doors. Store and secure the doors in the cab or in the cargo bed cover.
    - Secure all equipment inside the cargo bed cover with tape, nylon cord, or lashings. Close and secure shelter vents and door with nylon cord or tape.
    - Secure all equipment and cargo inside the vehicle with tape, nylon cord, or lashings.
    - Ensure the fuel tank is not over 3/4 full. Inspect fuel tank cap, oil filler cap, and battery caps for proper installation.
    - Engage the vehicle parking brake and put the transmission in neutral.
    - Ensure the front wheels are pointed straight ahead. Tie down the steering wheel, using the securing device attached under the dashboard.
    - Tape the windshield in an X formation from corner to corner.
    - Install the lift provisions on the outer ends of the rear bumper by removing the tiedown provisions located inboard of the bumper end and installing them on the outer ends of the rear bumper.
  - **Rigging.** Rig the load according to the steps in Figure 2-16.
  - **Hookup.** The hookup team stands on top of the cargo bed cover. The static wand person discharges the static electricity with the static wand. The forward hookup person places apex fitting 1 onto the forward cargo hook. The aft hookup person places apex fitting 2 onto the aft cargo hook. The hookup team then carefully dismounts the vehicle and remains close to the load as the helicopter removes slack from the sling legs. When successful hookup is assured, the hookup team quickly exits the area underneath the helicopter to the designated rendezvous point
  - **Derigging.** Derigging is the reverse of the preparation and rigging procedures.

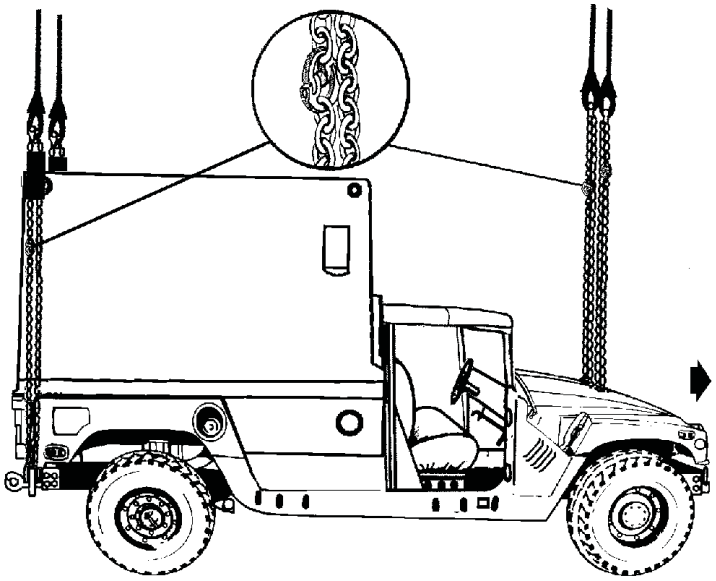

RIGGING STEPS

1. Connect 2 sling legs to apex fitting number 1. Position the apex fitting on top of the hood of the vehicle.

2. Loop the chain end of the sling legs through their respective lift provisions that protrudes through the hood. Place the correct link from Table 2-17 in the grab hook.

3. Connect 2 sling legs to apex fitting number 2. Position the apex fitting on top of the cargo bed cover.

4. Loop the chain end of the sling legs through their respective lift provisions located on the outside end of the bumper. Place the correct link from Table 2-17 in the grab hook.

5. Secure all excess chain with tape or Type III nylon cord.

6. Pad the chains where they contact the cargo bed cover.

7. Cluster and tie or tape (breakaway technique) the sling legs in each sling set on top of the vehicle to prevent entanglement during hookup and lift-off.

Figure 2-16. M1097A1 with Fiberglass Cargo Bed Cover

CAUTION

Do not use the lift shackles located near the center of the rear bumper for sling load lift provisions.

M998 TRUCK, CARGO, 1 1/4-TON (HMMWV) WITH AMTECH HELMET HARDTOP

2-19. The M998 truck, cargo, 1 1/4-ton with AMTECH helmet hardtop is rigged for dual-point sling load using the following procedures:

- **Applicability**. The following item in Table 2-18 is certified for the helicopter(s) listed in the following table by the US Army Natick Soldier Center:

Table 2-18. M998 Truck, Cargo, 1 1/4-Ton with AMTECH Helmet Hardtop

Nomenclature	*Max Weight (Pounds)*	*Sling Set*	*Link Count Front/Rear*	*Type of Aircraft*
Truck, 1 1/4-Ton, HMMWV, M998 with Helmet Hardtop, Basic, Models 1551/1551-0/1551-1/1551-3/1551-4/1551-5/1551-6/1552/1552-0/1552-1/1552-3/1552-4/1552-5/1552-6	7,700	10K	50/3	CH-47

- **Materials.** The following materials are required to rig this load:
  - Sling set (10,000-pound capacity) with one additional apex fitting.
    - Additional chain length, part number 38850-00053-101, from a 10,000-pound capacity sling set (4 each).
    - Additional coupling link, part number 5779125, from a 10,000-pound capacity sling set (4 each).
  - Tape, adhesive, pressure-sensitive, 2-inch wide roll.
  - Cord, nylon, Type III, 550-pound breaking strength.
  - Webbing, cotton, 1/4-inch, 80-pound breaking strength.
- **Personnel.** Two persons can prepare and rig this load in 20 minutes.
- **Procedures.** The following procedures apply to this load:
  - **Preparation.** Prepare the load using the following steps:
    - Extend the sling leg chains by connecting one additional chain length to each chain on a 10,000-pound capacity sling set with coupling links.
    - Fold mirrors forward in front of the windshield for added protection and tie together with Type III nylon cord.
    - Ensure the cargo bed cover is secured to the truck. Secure all equipment inside the shelter with tape, nylon cord, or lashings; close and secure shelter vents and door with nylon cord or tape.
    - Secure all equipment and cargo inside the vehicle with tape, nylon cord, or lashings. Secure the doors shut if installed.
    - Ensure the fuel tank is not over 3/4 full. Inspect fuel tank cap, oil filler cap, and battery caps for proper installation.
    - Engage the vehicle parking brake and put the transmission in neutral.
    - Ensure the front wheels are pointed straight ahead. Tie down the steering wheel, using the securing device attached under the dashboard.
    - Tape the windshield in an X formation from corner to corner.

- **Rigging.** Rig the load according to the steps in Figure 2-17.
- **Hookup.** The hookup team stands on top of the shelter. The static wand person discharges the static electricity with the static wand. The forward hookup person places apex fitting 1 onto the forward cargo hook. The aft hookup person places apex fitting 2 onto the aft cargo hook. The hookup team then carefully dismounts the vehicle and remains close to the load as the helicopter removes slack from the sling legs. When successful hookup is assured, the hookup team quickly exits the area underneath the helicopter to the designated rendezvous point.
- **Derigging.** Derigging is the reverse of the preparation and rigging procedures.

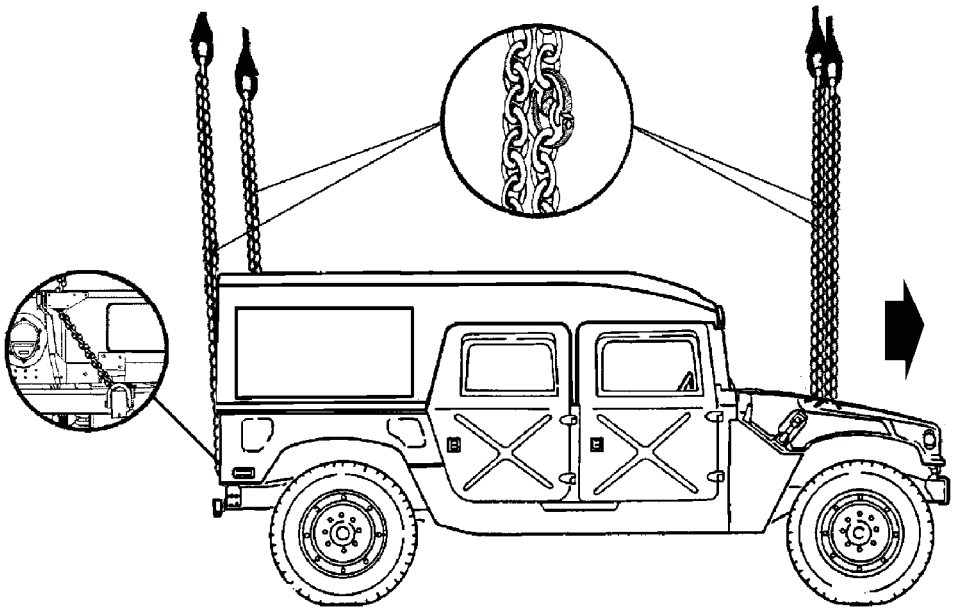

RIGGING STEPS

1. Connect 2 sling legs to apex fitting number 1. Position the apex fitting on top of the shelter.
2. Loop the chain end of the sling legs through their respective lift provisions that protrudes through the hood. Place the correct link from Table 2-18 in the grab hook.
3. Connect 2 sling legs to apex fitting number 2. Position the apex fitting on top of the shelter.
4. Route the chain end of the sling legs through their respective eyelet openings in the upper corner of the tailgate. Loop the chain end through the respective lift provision and back through the tailgate eyelets. Place the correct links from Table 2-18 in the grab hooks.
5. Secure all excess chain with tape or Type III nylon cord.
6. Cluster and tie (breakaway technique) the sling legs in each sling set on top of the vehicle to prevent entanglement during hookup and lift-off.

Figure 2-17. M998 Truck, Cargo, 1 1/4-Ton with AMTECH Helmet Hardtop

DUAL HMMWV, SIDE BY SIDE (SHOTGUN METHOD), WITH AMTECH HELMET HARDTOP BASIC

2-20. The dual HMMWV, side by side, with AMTECH helmet hardtop basic is rigged for dual-point sling load using the following procedures:

- **Applicability**. The following item in Table 2-19 is certified for the helicopter(s) listed in the following table by the US Army Natick Soldier Center:

Table 2-19. Dual HMMWV, Side by Side, with AMTECH Helmet Hardtop Basic

Nomenclature	*Max Weight (Pounds)*	*Sling Set*	*Link Count Front/Rear*	*Type of Aircraft*
Truck, 1 1/4-Ton, HMMWV, M998 with Helmet Hardtop, Basic, Models 1551/1551-0/1551-1/1551-3/1551-4/1551-5/1551-6/1552/1552-0/1552-1/1552-3/1552-4/1552-5/1552-6	7,700 each	10K	Listed in Rigging Steps	CH-47

WARNINGS

1. Only HMMWVs with the 3/4-inch front lift provisions are certified for sling loading in the side by side (shotgun) method.
2. HMMWVs with a manufacturer's serial number of less than 100000 are equipped with the 5/8-inch front lift provisions by the manufacturer but can be changed to the 3/4-inch front lift provisions by qualified maintenance personnel. HMMWVs with manufacturer's serial number of 100000 or greater are equipped with the 3/4-inch front lift provisions by the manufacturer. Prior to sling loading HMMWVs in the side by side (shotgun) method, verify that the HMMWVs are equipped with 3/4-inch front lift provisions by checking the manufacturer's serial number or measuring the diameter of the front lift provision. The HMMWV manufacturer's serial number is located on a data plate on the lower right corner of the driver's side door opening.

- **Materials.** The following materials are required to rig this load:
  - Sling set (10,000-pound capacity) (2 each).
    - Additional chain length, part number 38850-00053-101, from a 10,000-pound capacity sling set (8 each).
    - Additional coupling link, part number 5779125, from a 10,000-pound capacity sling set (8 each).
  - Tape, adhesive, pressure-sensitive, 2-inch wide roll.
  - Cord, nylon, Type III, 550-pound breaking strength.
  - Webbing, cotton, 1/4-inch, 80-pound breaking strength.
  - Strap, tiedown, cargo, CGU-1/B (2 each).
- **Personnel.** Four persons can prepare and rig this load in 20 minutes.

- **Procedures.** The following procedures apply to this load:
  - **Preparation.** Prepare the load using the following steps:
    - Extend the sling leg chains by connecting one additional chain length to each chain on a 10,000-pound capacity sling set with coupling links.
    - Fold mirrors forward in front of the windshield for added protection and tie together with Type III nylon cord.
    - Ensure the cargo bed cover is secured to the truck. Secure all equipment inside the shelter with tape, nylon cord, or lashings; close and secure shelter vents and door with nylon cord or tape.
    - Secure all equipment and cargo inside the vehicle with tape, nylon cord, or lashings. Secure the doors shut if installed.
    - Ensure the fuel tank is not over 3/4 full. Inspect fuel tank cap, oil filler cap, and battery caps for proper installation.
    - Secure the vehicle camouflage net (in the bag) to each vehicle. Secure one net to the forward doorpost of one vehicle and the other net to the hard part of the body covering the fuel tank opening of the other vehicle.
    - Position the vehicles next to each other, as close as possible. Both vehicles must face the same direction.
    - Engage the vehicle parking brake and put the transmission in neutral.
    - Ensure the front wheels are pointed straight ahead. Tie down the steering wheel, using the securing device attached under the dashboard.
    - Tape the windshield in an X formation from corner to corner.
    - Remove and stow the fuel can holders from the tailgates.
  - **Rigging.** Rig the load according to the steps in Figure 2-18.
  - **Hookup.** The hookup teams stand on the cargo bed cover and on the hood of the vehicles. The static wand person discharges the static electricity with the static wand. The forward hookup person places apex fitting 1 onto the forward cargo hook. The aft hookup person places apex fitting 2 onto the aft cargo hook. The hookup team then carefully dismounts the vehicle and remains close to the load as the helicopter removes slack from the sling legs. When successful hookup is assured, the hookup team quickly exits the area underneath the helicopter to the designated rendezvous point.
  - **Derigging.** Derigging is the reverse of the preparation and rigging procedures.

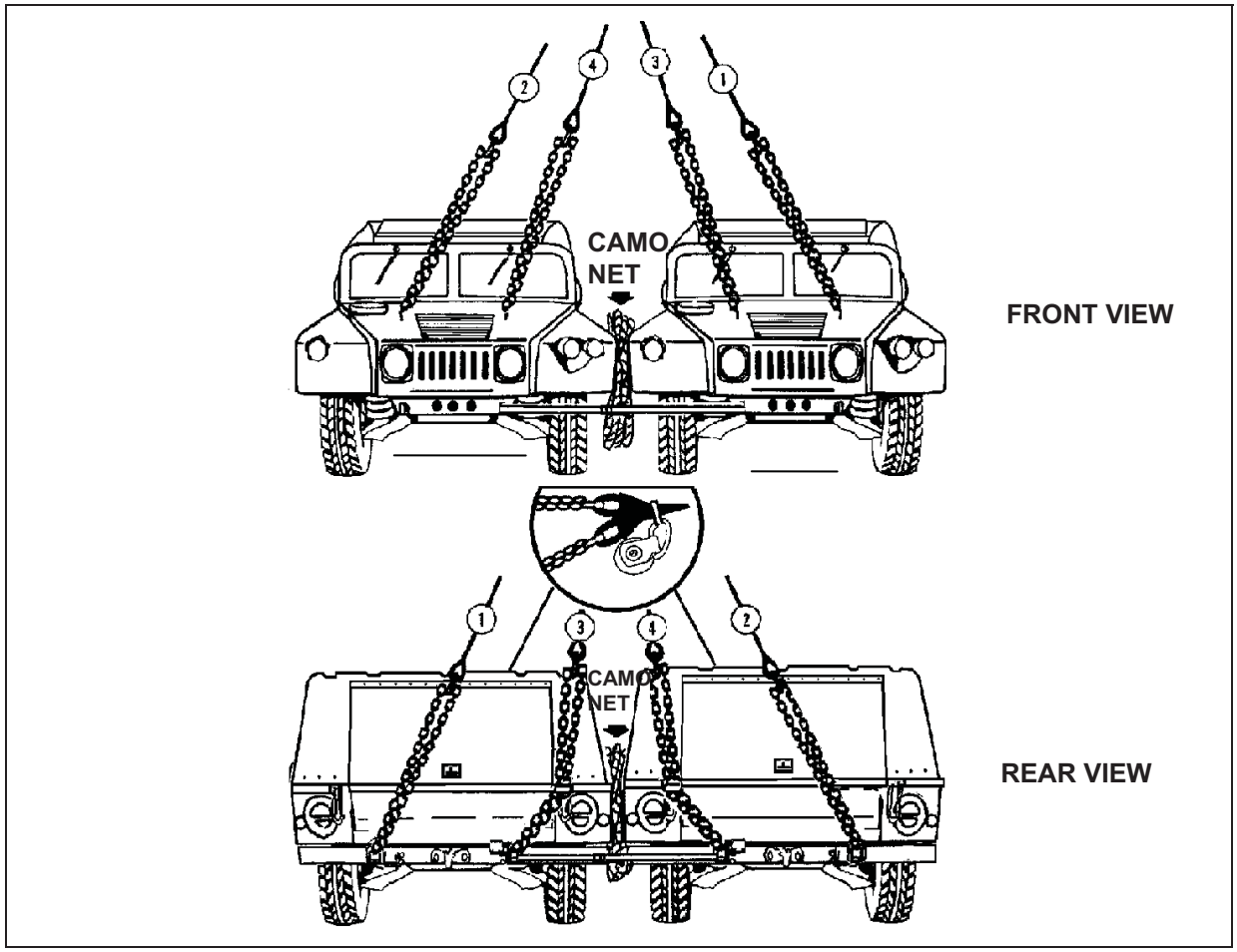

Figure 2-18. Dual HMMWVs, Side by Side, with AMTECH Helmet Hardtop Basic

RIGGING STEPS

1. Position one sling set on the hood of one of the vehicles.

2. Loop the chain end of the outside sling legs through their respective outside lift provisions that protrude through the hoods of the vehicles. Place link 35 in the grab hooks.

3. Loop the chain end of the inside sling legs through their respective inside lift provisions that protrude through the hoods of the vehicles. Place link 50 in the grab hooks.

4. Position the other sling set on the roof of one of the vehicles.

5. Loop the chain end of the outside sling legs through their respective lift shackle on the outside end of the rear bumper. Place link 8 in the grab hooks.

CAUTION

Do not route the outside sling legs through the tailgate sling guides.

6. Route the chain ends of the inside sling legs through their respective inside tailgate guides. Loop the chain ends through their respective lift provisions located on the inside of the rear bumpers and back through the tailgate guides. Place link 7 in the grab hooks.

7. Secure all excess chain with tape or Type III nylon cord.

8. Direct the front sling legs from each vehicle to the inside front tiedown provision on the top of the helmet hardtop. Tie the sling legs to the tiedown provision with Type I, 1/4-inch cotton webbing. Ensure all the slack is removed from the chain.

9. Remove the slack in the rear sling chains. Tie the sling legs from each vehicle to the inside rear tiedown provision on the helmet hardtop with Type I, 1/4-inch cotton webbing.

10. Cluster and tie (breakaway technique) the sling legs in each sling set on top of the vehicle to prevent entanglement during hookup and lift-off.

11. Route a CGU-1/B cargo tiedown strap from the front inside tie down shackle of one vehicle, through the front inside tie down shackle of the other vehicle and connect the hooks together. Tighten the strap.

12. Route a CGU-1/B cargo tiedown strap from the rear inside lift shackle of one vehicle, through the rear inside lift shackle of the other vehicle and connect the hooks together. Ensure the strap is positioned below the sling leg chains. Tighten the strap.

Figure 2-18. Dual HMMWVs, Side by Side, with AMTECH Helmet Hardtop Basic (Continued)

HELMET HARDTOP (AMTECH) CARGO BED COVER ON M1097A2 HMMWV

2-21. The helmet hardtop (AMTECH) cargo bed cover on M1097A2 is rigged for dual-point sling load using the following procedures:

- **Applicability**. The following item in Table 2-20 is certified for the helicopter(s) listed in the following table by the US Army Natick Soldier Center:

Table 2-20. Helmet Hardtop (AMTECH) Cargo Bed Cover on M1097A2

Nomenclature	*Max Weight (Pounds)*	*Sling Set*	*Link Count Front/Rear*	*Type of Aircraft*
Measurement and Signature Intelligence (MASINT)	10,300	25K	36/10	CH-47

- **Materials.** The following materials are required to rig this load:
  - Sling set (25,000-pound capacity) with one additional apex fitting.
    - Additional chain length, part number 38850-00053-102, from a 25,000-pound capacity sling set (4 each).
    - Additional coupling link, part number 5779135, from a 25,000-pound capacity sling set (4 each).
  - Tape, adhesive, pressure-sensitive, 2-inch wide roll.
  - Cord, nylon, Type III, 550-pound breaking strength.
  - Webbing, cotton, 1/4-inch, 80-pound breaking strength.
- **Personnel.** Two persons can prepare and rig this load in 20 minutes.
- **Procedures.** The following procedures apply to this load:
  - **Preparation.** Prepare the load using the following steps:
    - Extend the sling leg chains by connecting one additional chain length to each chain on a 25,000-pound capacity sling set with coupling links.
    - Fold mirrors forward in front of the windshield for added protection and tie together with Type III nylon cord.
    - Ensure the cargo bed cover is secured to the truck. Secure all equipment inside the shelter with tape, nylon cord, or lashings; close and secure shelter vents and door with nylon cord or tape.
    - Secure all equipment and cargo inside the vehicle with tape, nylon cord, or lashings. Secure the doors shut if installed.
    - Ensure the fuel tank is not over 3/4 full. Inspect fuel tank cap, oil filler cap, and battery caps for proper installation.
    - Engage the vehicle parking brake and put the transmission in neutral.
    - Ensure the front wheels are pointed straight ahead. Tie down the steering wheel, using the securing device attached under the dashboard.
    - Tape the windshield in an X formation from corner to corner.
  - **Rigging.** Rig the load according to the steps in Figure 2-19.
  - **Hookup.** The hookup team stands on top of the shelter. The static wand person discharges the static electricity with the static wand. The forward hookup person places apex fitting 1 onto the forward cargo hook. The aft hookup person places apex fitting 2 onto the aft cargo hook. The hookup team then carefully dismounts the vehicle and remains close to the load as the helicopter removes slack from the sling legs. When successful hookup is assured, the hookup team quickly exits the area underneath the helicopter to the designated rendezvous point.
  - **Derigging.** Derigging is the reverse of the preparation and rigging procedures.

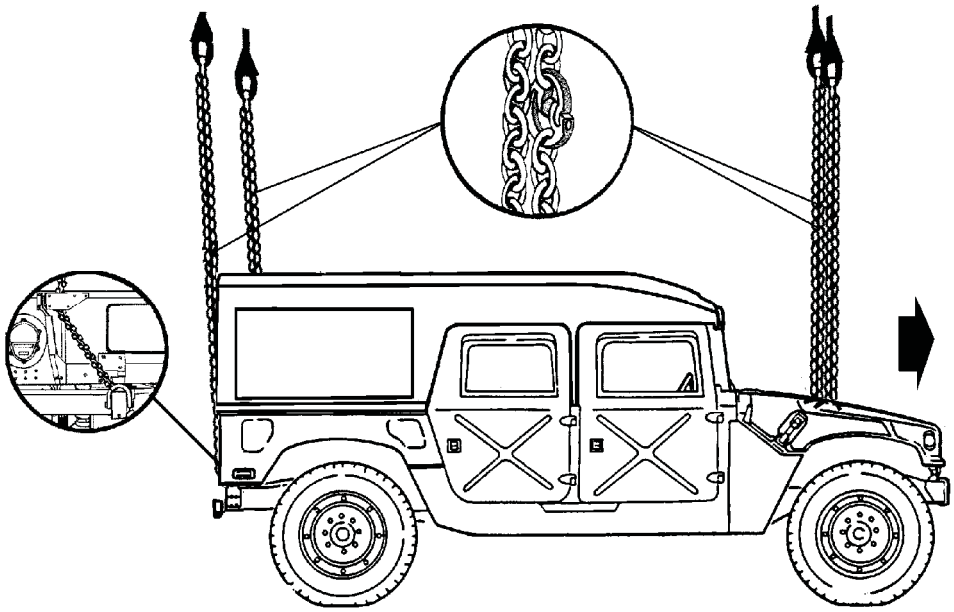

RIGGING STEPS

1. Connect 2 sling legs to apex fitting number 1. Position the apex fitting on top of the shelter.
2. Loop the chain end of the sling legs through their respective lift provisions that protrudes through the hood. Place the correct link from Table 2-20 in the grab hook.
3. Connect 2 sling legs to apex fitting number 2. Position the apex fitting on top of the shelter.
4. Route the chain end of the sling legs through their respective eyelet openings in the upper corner of the tailgate. Loop the chain end through the respective lift provision and back through the tailgate eyelets. Place the correct links from Table 2-20 in the grab hooks.
5. Secure all excess chain with tape or Type III nylon cord.
6. Cluster and tie (breakaway technique) the sling legs in each sling set on top of the vehicle to prevent entanglement during hookup and lift-off.

Figure 2-19. Helmet Hardtop (AMTECH) Cargo Bed Cover on M1097A2

PROPHET AN/MLQ-40(V) ON M1097 HMMWV

2-22. The prophet AN/MLQ-40(V) on M1097 is rigged for dual-point sling load using the following procedures:

- **Applicability**. The following items in Table 2-21 are certified for the helicopter(s) listed in the following table by the US Army Natick Soldier Center:

Table 2-21. Prophet AN/MLQ-40(V) on M1097

Nomenclature	*Max Weight (Pounds)*	*Sling Set*	*Link Count Front/Rear*	*Type of Aircraft*
Prophet, AN/MLQ-40 (V) 1	10,000	10K	45/10	CH-47
Prophet, AN/MLQ-40 (V) 3	10,000	10K	45/10	CH-47
Prophet, Control Vehicle	10,000	10K	45/10	CH-47

- **Materials.** The following materials are required to rig this load:
  - Sling set (10,000-pound capacity) with one additional apex fitting.
    - Additional chain length, part number 38850-00053-101, from a 10,000-pound capacity sling set (4 each).
    - Additional coupling link, part number 5779125, from a 10,000-pound capacity sling set (4 each).
  - Tape, adhesive, pressure-sensitive, 2-inch wide roll.
  - Cord, nylon, Type III, 550-pound breaking strength.
  - Webbing, cotton, 1/4-inch, 80-pound breaking strength.
- **Personnel.** Two persons can prepare and rig this load in 15 minutes.
- **Procedures.** The following procedures apply to this load:
  - **Preparation.** Prepare the load using the following steps:
    - Extend the sling leg chains by connecting one additional chain length to each chain on a 10,000-pound capacity sling set with coupling links.
    - Fold mirrors forward in front of the windshield for added protection and tie together with Type III nylon cord.
    - Ensure the cargo bed cover is secured to the truck. Secure all equipment inside the shelter with tape, nylon cord, or lashings; close and secure shelter vents and door with nylon cord or tape.
    - Secure all equipment and cargo inside the vehicle with tape, nylon cord, or lashings. Secure the doors shut if installed.
    - Ensure the fuel tank is not over 3/4 full. Inspect fuel tank cap, oil filler cap, and battery caps for proper installation.
    - Engage the vehicle parking brake and put the transmission in neutral.
    - Ensure the front wheels are pointed straight ahead. Tie down the steering wheel, using the securing device attached under the dashboard.
    - Tape the windshield in an X formation from corner to corner.
    - Install the lift provisions on the outer ends of the rear bumper.
  - **Rigging.** Rig the load according to the steps in Figure 2-20.
  - **Hookup.** The hookup team stands on top of the shelter. The static wand person discharges the static electricity with the static wand. The forward hookup person places apex fitting 1 onto the forward cargo hook. The aft hookup person places apex fitting 2 onto the aft cargo hook. The hookup team then carefully dismounts the vehicle and remains close to the load as the helicopter removes slack from the sling legs. When successful hookup is assured, the hookup team quickly exits the area underneath the helicopter to the designated rendezvous point.
  - **Derigging.** Derigging is the reverse of the preparation and rigging procedures.

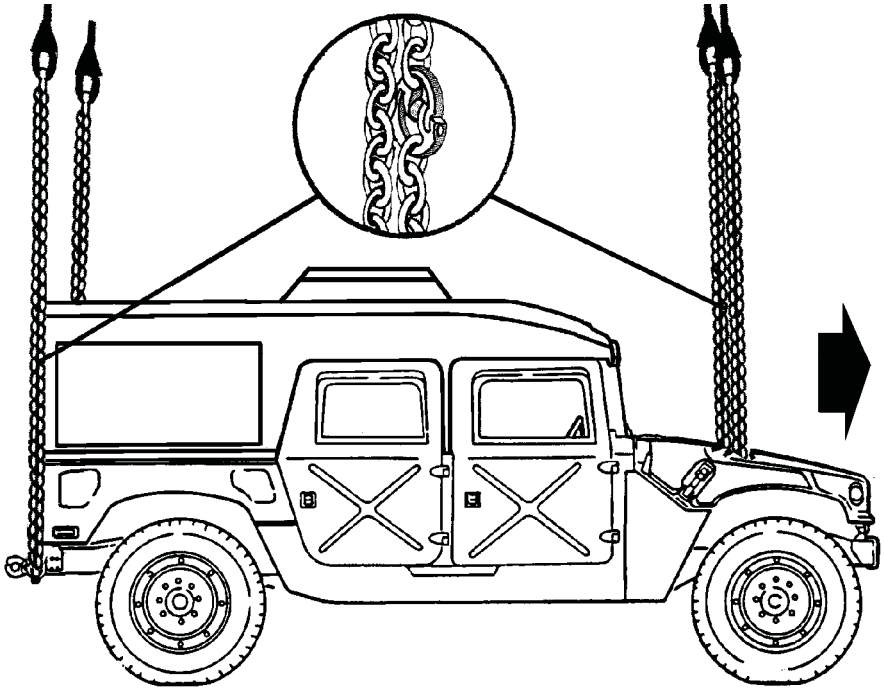

RIGGING STEPS

1. Connect 2 sling legs to apex fitting number 1. Position the apex fitting on top of the shelter.
2. Loop the chain end of the sling legs through their respective lift provisions that protrudes through the hood. Place the correct link from Table 2-21 in the grab hook.
3. Connect 2 sling legs to apex fitting number 2. Position the apex fitting on top of the shelter.
4. Route the right sling leg chain through the right rear lift provision located on the outer end of the rear bumper. Place the correct link from Table 2-21 in the grab hook. Repeat the procedure using the left sling leg chain and the left lift provision located on the end of the bumper.
5. Remove all the excess slack between the lift provisions and the shelter lift rings.
6. Secure all excess chain with tape or Type III nylon cord.
7. Cluster and tie (breakaway technique) the sling legs in each sling set on top of the vehicle to prevent entanglement during hookup and lift-off.

Figure 2-20. Prophet AN/MLQ-40(V) on M1097

CAUTION

Do not route the outside sling legs through the tailgate sling guides.

M1097 (HMMWV) WITH CONTACT MAINTENANCE TRUCK, HEAVY (CMTH)

2-23. The M1097 with contact maintenance truck, heavy is rigged for dual-point sling load using the following procedures:

- **Applicability**. The following items in Table 2-22 are certified for the helicopter(s) listed in the following table by the US Army Natick Soldier Center:

Table 2-22. M1097 with Contact Maintenance Truck, Heavy

Nomenclature	*Max Weight (Pounds)*	*Sling Set*	*Link Count Front/Rear*	*Type of Aircraft*
CMTH, Shop Equipment (SE) on M1097	8,760	10K	50/3	CH-47
CMTH, Aviation Section (AS) on M1097	9,400	10K	50/3	CH-47

- **Materials.** The following materials are required to rig this load:
  - Sling set (10,000-pound capacity) with one additional apex fitting.
    - Additional chain length, part number 38850-00053-101, from a 10,000-pound capacity sling set (4 each).
    - Additional coupling link, part number 5779125, from a 10,000-pound capacity sling set (4 each).
  - Tape, adhesive, pressure-sensitive, 2-inch wide roll.
  - Cord, nylon, Type III, 550-pound breaking strength.
  - Webbing, cotton, 1/4-inch, 80-pound breaking strength.
  - Felt sheet, cattle hair, Type IV, 1/2-inch or suitable padding.
- **Personnel.** Two persons can prepare and rig this load in 15 minutes.
- **Procedures.** The following procedures apply to this load:
  - **Preparation.** Prepare the load using the following steps:
    - Extend the sling leg chains by connecting one additional chain length to each chain on a 10,000-pound capacity sling set with coupling links.
    - Fold mirrors forward in front of the windshield for added protection and tie together with Type III nylon cord. Secure the doors.
    - Ensure the shelter is securely attached to the vehicle.
    - Secure all equipment and cargo inside the vehicle with tape, Type III nylon cord, or lashings.
    - Secure all equipment, doors, and drawers inside the shelter with tape, Type III nylon cord, or lashings. Close and secure all shelter doors and vents with tape or Type III nylon cord.
    - Ensure the fuel tank is not over 3/4 full. Inspect fuel tank cap, oil filler cap, and battery caps for proper installation.
    - Engage the vehicle parking brake and put the transmission in neutral.
    - Ensure the front wheels are pointed straight ahead. Tie down the steering wheel, using the securing device attached under the dashboard.
    - Install the lift provisions on the outer ends of the bumper.
  - **Rigging.** Rig the load according to the steps in Figure 2-21.
  - **Hookup.** The hookup team stands on top of the cargo bed cover. The static wand person discharges the static electricity with the static wand. The forward hookup person places apex fitting 1 onto the forward cargo hook. The aft hookup person places apex fitting 2 onto the aft cargo hook. The hookup team then carefully dismounts the vehicle and remains close to the

load as the helicopter removes slack from the sling legs. When successful hookup is assured, the hookup team quickly exits the area underneath the helicopter to the designated rendezvous point.

- **Derigging.** Derigging is the reverse of the preparation and rigging procedures.

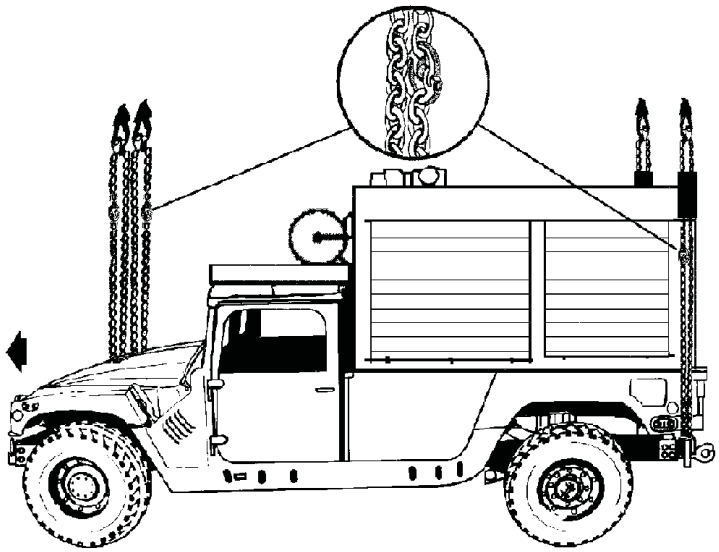

RIGGING STEPS

1. Connect 2 sling legs to apex fitting number 1. Position the apex fitting on the hood of the vehicle.
2. Loop the chain end of the sling legs through their respective lift provisions that protrudes through the hood. Place the correct link from Table 2-22 in the grab hook.
3. Connect 2 sling legs to apex fitting number 2. Position the apex fitting on top of the shelter.
4. Loop the chain end of the sling legs through their respective lift provisions located on the outer ends of the rear bumper. Place the correct link from Table 2-22 in the grab hook.
5. Wrap the rear slings with padding where they contact the vehicle sides.
6. Secure all excess chain with tape or Type III nylon cord.
7. Cluster and tie (breakaway technique) the sling legs in each sling set on top of the vehicle to prevent entanglement during hookup and lift-off.

Figure 2-21. M1097 with Contact Maintenance Truck, Heavy

CAUTION

Do not route the outside sling legs through the tailgate sling guides.

M1098 HMMWV WITH REMOTE LANDING SITE TOWER (RLST)

2-24. The M1098 with remote landing site tower is rigged for dual-point sling load using the following procedures:

- **Applicability.** The following item in Table 2-23 is certified for the helicopter(s) listed in the following table by the US Army Natick Soldier Center:

Table 2-23. M1098 with Remote Landing Site Tower

Nomenclature	*Max Weight (Pounds)*	*Sling Set*	*Link Count Front/Rear*	*Type of Aircraft*
Remote Landing Site Tower	8,460	15K	60/3	CH-53

- **Materials.** The following materials are required to rig this load:
  - Sling set (15,000-pound capacity) with one additional web ring.
    - Additional chain length, part number 34080-4, from a 15,000-pound capacity sling set (8 each).
    - Additional coupling link, part number 31611, from a 15,000-pound capacity sling set (8 each).
  - Tape, adhesive, pressure-sensitive, 2-inch wide roll.
  - Cord, nylon, Type III, 550-pound breaking strength.
  - Webbing, cotton, 1/4-inch, 80-pound breaking strength.
  - Felt sheet, cattle hair, Type IV, 1/2-inch or suitable padding.
  - Strap, cargo, tie-down, CGU-1/B (as required).
- **Personnel.** Two persons can prepare and rig this load in 15 minutes.
- **Procedures.** The following procedures apply to this load:
  - **Preparation.** Prepare the load using the following steps:
    - Attach two chain lengths to each sling leg using the coupling links.
    - Fold mirrors forward in front of the windshield for added protection and tie together with Type III nylon cord.
    - Remove the cab doors. Stow and secure the doors against the rear of the seats with the tiedown straps. Tape the windshield, mirrors, and all glass items.
    - Ensure the fuel tank is not over 3/4 full. Inspect fuel tank cap (should be in the vent position), oil filler cap, and battery caps for proper installation.
    - Engage the vehicle parking brake and put the transmission in neutral.
    - Ensure the front wheels are pointed straight ahead. Tie down the steering wheel, using the securing device attached under the dashboard.
    - Install the lift provisions on the outer ends of the rear bumper by removing the tiedown provisions located inboard of the bumper end and installing them on the outer ends of the bumper.
    - Place the RLST in the TRANSPORT mode according to the operator's manual.
    - Ensure the RLST is securely attached to the truck. Secure all loose equipment inside the RLST with the hold down straps, tape, or Type III nylon cord. Close and secure the door.
    - Secure the RSLT cover with the straps provided. Secure the loose ends with tape.
  - **Rigging.** Rig the load according to the steps in Figure 2-22.
  - **Hookup.** The hookup team stands beside the vehicle. The static wand person discharges the static electricity with the static wand. The forward hookup person places apex fitting 1 onto the forward cargo hook. The aft hookup person places apex fitting 2 onto the aft cargo hook. The hookup team then carefully dismounts the vehicle and remains close to the load as

the helicopter removes slack from the sling legs. When successful hookup is assured, the hookup team quickly exits the area underneath the helicopter to the designated rendezvous point.

- **Derigging.** Derigging is the reverse of the preparation and rigging procedures.

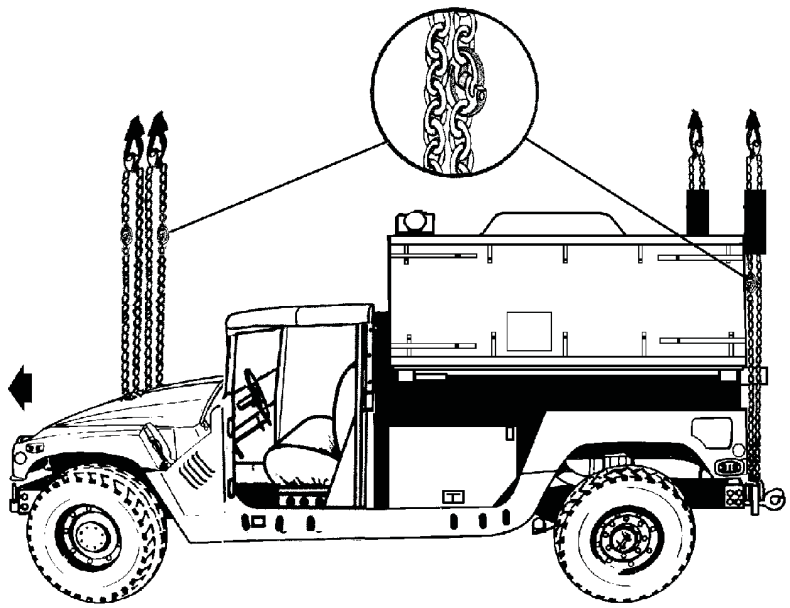

RIGGING STEPS

1. Connect 2 sling legs to web ring number 1. Position the apex fitting beside the hood of the vehicle.
2. Loop the chain end of the sling legs through their respective lift provisions that protrudes through the hood. Place the correct link from Table 2-26 in the grab hook.
3. Connect 2 sling legs to web ring number 2. Position the apex fitting the rear of the vehicle.
4. Loop the chain end of the sling legs through their respective lift provisions located on the outside end of the bumper. Place the correct link from Table 2-26 in the grab hook.
5. Secure all excess chain with tape or Type III nylon cord.
6. Pad the chains where they contact the RLST.
7. Cluster and tie (breakaway technique) the sling legs in each sling set on top of the vehicle to prevent entanglement during hookup and lift-off.

Figure 2-22. M1098 with Remote Landing Site Tower

CAUTION

Do not route the outside sling legs through the tailgate sling guides.

M1097 (HMMWV) WITH HIGH MOBILITY DIGITAL GROUP MULTIPLEXER (DGM) AUXILIARY EQUIPMENT TRANSPORTATION CONTAINER (AETC) IN 2 AND 3 MAST CONFIGURATIONS

2-25. The M1097 with high mobility digital group multiplexer auxiliary equipment transportation container in 2 and 3 mast configurations are rigged for dual-point sling load using the following procedures:

- **Applicability.** The following items in Table 2-24 are certified for the helicopter(s) listed in the following table by the US Army Natick Soldier Center:

Table 2-24. M1097 with High Mobility Digital Group Multiplexer Auxiliary Equipment Transportation Container in 2 and 3 Mast Configurations

Nomenclature	*Max Weight (Pounds)*	*Sling Set*	*Link Count Front/Rear*	*Type of Aircraft*
2 Mast, AETC Configuration	8,500	10K	55/3	CH-47
3 Mast, AETC Configuration	9,500	10K	55/3	CH-47

- **Materials.** The following materials are required to rig this load:
  - Sling set (10,000-pound capacity) with one additional apex fitting.
    - Additional chain length, part number 38850-00053-101, from a 10,000-pound capacity sling set (4 each).
    - Additional coupling link, part number 5779125, from a 10,000-pound capacity sling set (4 each).
  - Tape, adhesive, pressure-sensitive, 2-inch wide roll.
  - Cord, nylon, Type III, 550-pound breaking strength.
  - Webbing, cotton, 1/4-inch, 80-pound breaking strength.
  - Felt sheet, cattle hair, Type IV, 1/2-inch or suitable padding.
- **Personnel.** Two persons can prepare and rig this load in 15 minutes.
- **Procedures.** The following procedures apply to this load:
  - **Preparation.** Prepare the load using the following steps:
    - Extend the sling leg chains by connecting one additional chain length to each chain on a 10,000- pound capacity sling set with coupling links.
    - Fold mirrors forward in front of the windshield for added protection and tie together with Type III nylon cord. Remove the canvas cab top and the doors. Secure to the seats with Type III nylon cord.
    - Remove, fold, stow, and secure the canvas cover for the AETC using Type III nylon cord.
    - Secure all equipment and cargo inside the vehicle with tape, Type III nylon cord, or lashings.
    - Ensure the fuel tank is not over 3/4 full. Inspect fuel tank cap, oil filler cap, and battery caps for proper installation.
    - Engage the vehicle parking brake and put the transmission in neutral.
    - Ensure the front wheels are pointed straight ahead. Tie down the steering wheel, using the securing device attached under the dashboard.
  - **Rigging.** Rig the load according to the steps in Figure 2-24.
  - **Hookup.** The hookup team stands on top of the container. The static wand person discharges the static electricity with the static wand. The forward hookup person places apex fitting 1 onto the forward cargo hook. The aft hookup person places apex fitting 2 onto the aft

cargo hook. The hookup team then carefully dismounts the vehicle and remains close to the load as the helicopter removes slack from the sling legs. When successful hookup is assured, the hookup team quickly exits the area underneath the helicopter to the designated rendezvous point.

- **Derigging.** Derigging is the reverse of the preparation and rigging procedures.

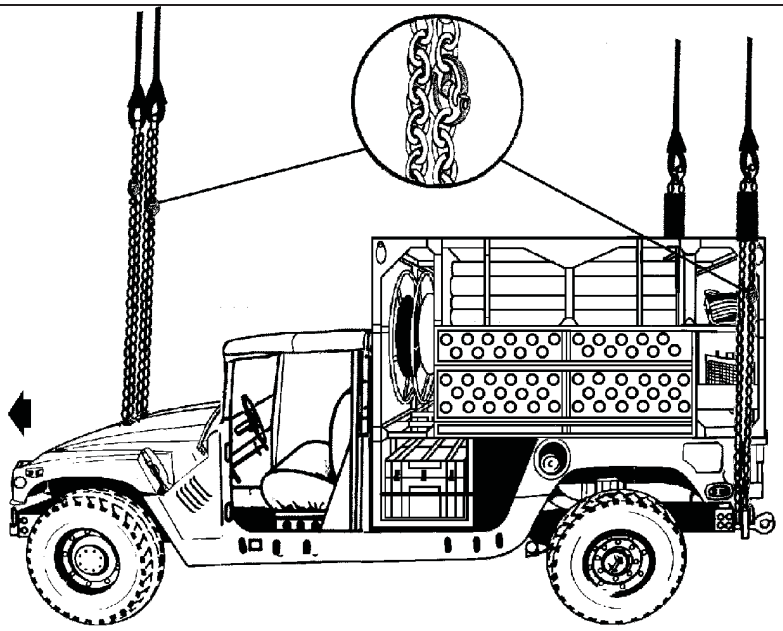

RIGGING STEPS

1. Connect 2 sling legs to apex fitting number 1. Position the apex fitting on the hood of the vehicle.
2. Loop the chain end of the sling legs through their respective lift provisions that protrudes through the hood. Place the correct link from Table 2-24 in the grab hook.
3. Connect 2 sling legs to apex fitting number 2. Position the apex fitting in the cargo bed of the vehicle.
4. Loop the chain end of the sling legs through their respective lift shackle on the outside end of the rear bumper. Place the correct link from Table 2-24 in the grab hook.
5. Secure all excess chain with tape or Type III nylon cord.
6. Wrap the rear slings with padding where they contact the vehicle.
7. Cluster and tie (breakaway technique) the sling legs in each sling set on top of the vehicle to prevent entanglement during hookup and lift-off.

Figure 2-23. M1097 with 2 or 3 Mast AETC Configuration

CAUTION

Do not route the outside sling legs through the tailgate sling guides.

M1097A2 (H-HMMWV) WITH THE SECURE MOBILE ANTI-JAM RELIABLE TACTICAL TERMINAL (SMART-T)

2-26. The M1097A2 with the secure mobile anti-jam reliable tactical terminal is rigged for dual-point sling load using the following procedures:

- **Applicability.** The following item in Table 2-25 is certified for the helicopter(s) listed in the following table by the US Army Natick Soldier Center:

Table 2-25. M1097A2 with the Secure Mobile Anti-Jam Reliable Tactical Terminal

Nomenclature	*Max Weight (Pounds)*	*Sling Set*	*Link Count Front/Rear*	*Type of Aircraft*
Secure Mobile Anti-Jam Reliable Tactical Terminal	8,450	10K	30/3	CH-47

- **Materials.** The following materials are required to rig this load:
  - Sling set (10,000-pound capacity) with one additional apex fitting.
  - Tape, adhesive, pressure-sensitive, 2-inch wide roll.
  - Cord, nylon, Type III, 550-pound breaking strength.
  - Webbing, cotton, 1/4-inch, 80-pound breaking strength.
  - Felt sheet, cattle hair, Type IV, 1/2-inch or suitable substitute.
  - Strap, tiedown, cargo, CGU-1/B (as required).
- **Personnel.** Two persons can prepare and rig this load in 15 minutes.
- **Procedures.** The following procedures apply to this load:
  - **Preparation.** Prepare the load using the following steps:
    - Fold mirrors forward in front of the windshield for added protection and tie together with Type III nylon cord.
    - Remove the cab doors. Stow and secure the doors against the rear of the seats with the tiedown straps. Tape the windshield, mirrors, and all glass items.
    - Ensure the fuel tank is not over 3/4 full. Inspect fuel tank cap (should be in the vent position), oil filler cap, and battery caps for proper installation.
    - Engage the vehicle parking brake and put the transmission in neutral.
    - Ensure the front wheels are pointed straight ahead. Tie down the steering wheel, using the securing device attached under the dashboard.
    - Ensure the two fuel cans on the rear of the pallet are locked in place. Secure all loose equipment on the pallet with tape or Type III nylon cord.
    - Secure the antenna dish.
  - **Rigging.** Rig the load according to the steps in Figure 2-24.
  - **Hookup.** The hookup team stands on truck. The static wand person discharges the static electricity with the static wand. The forward hookup person places apex fitting 1 onto the forward cargo hook. The aft hookup person places apex fitting 2 onto the aft cargo hook. The hookup team then carefully dismounts the vehicle and remains close to the load as the helicopter removes slack from the sling legs. When successful hookup is assured, the hookup team quickly exits the area underneath the helicopter to the designated rendezvous point.
  - **Derigging.** Derigging is the reverse of the preparation and rigging procedures.

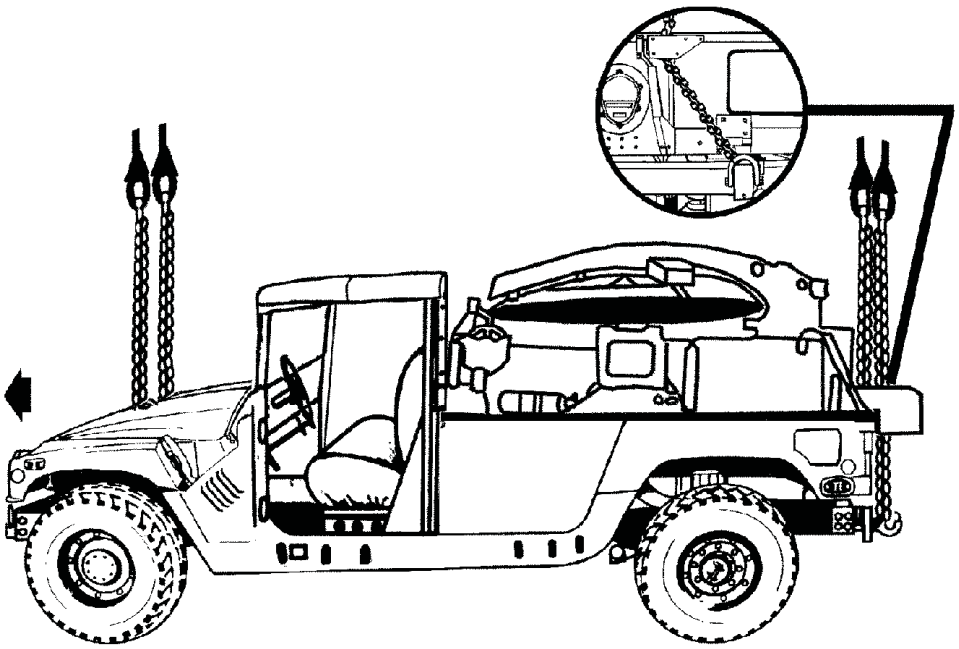

RIGGING STEPS

1. Connect 2 sling legs to apex fitting number 1. Position the apex fitting on the hood of the vehicle.

2. Loop the chain end of the sling legs through their respective lift provisions that protrudes through the hood. Place the correct link from Table 2-25 in the grab hook.

3. Connect 2 sling legs to apex fitting number 2. Position the apex fitting on top of the pallet.

4. Loop the chain end of the sling legs through their respective eyelet openings in the upper corner of the tailgate. Loop the chain end through the lift shackle on the rear bumper and thread back through the eyelet opening in the tailgate. Place the correct link from Table 2-25 in the grab hook.

5. Secure all excess chain with tape or Type III nylon cord.

6. Cluster and tie (breakaway technique) the sling legs in each sling set on top of the vehicle to prevent entanglement during hookup and lift-off.

Figure 2-24. M1097A2 with the Secure Mobile Anti-Jam Reliable Tactical Terminal

TROJAN SPIRIT LITE (V)2 CENTRAL COMMUNICATIONS, AN/TSQ-226 (V)2 ON M1113 HMMWV

2-27. The Trojan Spirit Lite (V)2 central communications, AN/TSQ-226 (V)2 on M1113 is rigged for dual-point sling load using the following procedures:

- **Applicability.** The following item in Table 2-26 is certified for the helicopter(s) listed in the following table by the US Army Natick Soldier Center:

Table 2-26. Trojan Spirit Lite (V)2 Central Communications, AN/TSQ-226 (V)2 on M1113

Nomenclature	*Max Weight (Pounds)*	*Sling Set*	*Link Count Front/Rear*	*Type of Aircraft*
Trojan Spirit Lite (V)2 Central Communications AN/TSQ-226 (V) 2 on M1113 HMMWV	11,500	25K	35/3	CH-47

- **Materials.** The following materials are required to rig this load:
  - Sling set (25,000-pound capacity) with one additional apex fitting.
    - Additional chain length, part number 38850-00053-102, from a 25,000-pound capacity sling set (4 each).
    - Additional coupling link, part number 5779135, from a 25,000-pound capacity sling set (4 each).
  - Tape, adhesive, pressure-sensitive, 2-inch wide roll.
  - Cord, nylon, Type III, 550-pound breaking strength.
  - Webbing, cotton, 1/4-inch, 80-pound breaking strength.
- **Personnel.** Two persons can prepare and rig this load in 20 minutes.
- **Procedures.** The following procedures apply to this load:
  - **Preparation.** Prepare the load using the following steps:
    - Extend the sling leg chains by connecting one additional chain length to each chain on a 25,000-pound capacity sling set with coupling links.
    - Fold mirrors forward inward and tie together with Type III nylon cord.
    - Secure all equipment on the pallet with tape, Type III nylon cord, or tiedown straps. Close and secure all latches and handles with tape or Type III nylon cord.
    - Secure all equipment and cargo inside the vehicle with tape, nylon cord, or lashings. Secure the doors shut if installed.
    - Ensure the fuel tank is not over 3/4 full. Inspect fuel tank cap, oil filler cap, and battery caps for proper installation.
    - Engage the vehicle parking brake and put the transmission in neutral.
    - Ensure the front wheels are pointed straight ahead. Tie down the steering wheel, using the securing device attached under the dashboard.
    - Tape the windshield in an X formation from corner to corner.
    - Secure the rear lift provisions in the up position with Type III nylon cord.
  - **Rigging.** Rig the load according to the steps in Figure 2-25.
  - **Hookup.** The hookup team stands on top of the vehicle. The static wand person discharges the static electricity with the static wand. The forward hookup person places apex fitting 1 onto the forward cargo hook. The aft hookup person places apex fitting 2 onto the aft cargo hook. The hookup team then carefully dismounts the vehicle and remains close to the load as the helicopter removes slack from the sling legs. When successful hookup is assured, the hookup team quickly exits the area underneath the helicopter to the designated rendezvous point.
  - **Derigging.** Derigging is the reverse of the preparation and rigging procedures.

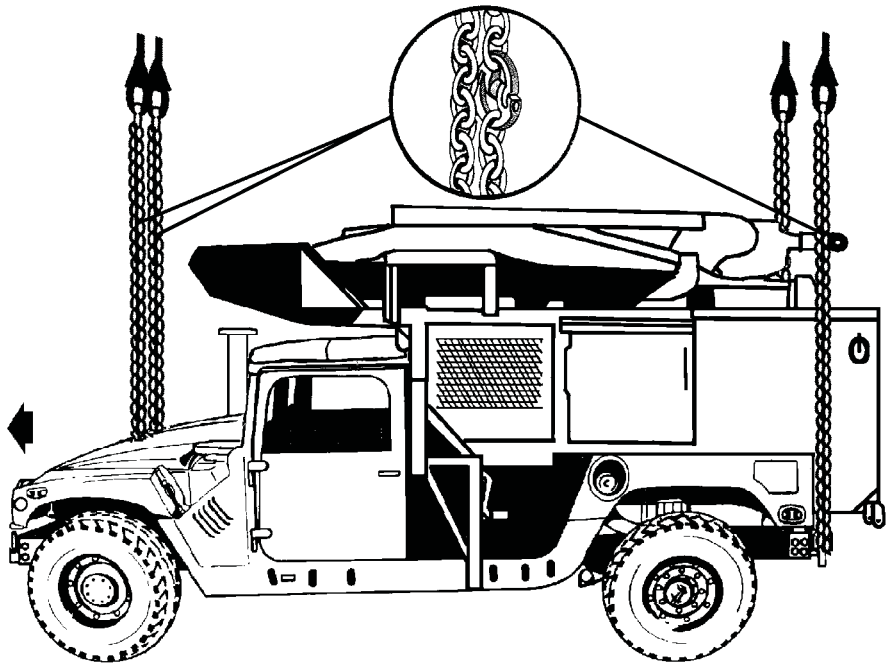

RIGGING STEPS

1. Connect 2 sling legs to apex fitting number 1. Position the apex fitting on top of the vehicle.

2. Loop the chain end of the sling legs through their respective lift provisions that protrudes through the hood. Place the correct link from Table 2-26 in the grab hook. Secure all excess chain with tape or Type III nylon cord.

3. Connect 2 sling legs to apex fitting number 2. Position the apex fitting on top of the pallet.

4. Loop the chain end through the respective lift provision located on the outside end of the bumper. Place the correct links from Table 2-26 in the grab hooks. Secure all excess chain with tape or Type III nylon cord.

5. Remove all slack from the rear sling legs and secure the sling legs on top of the pallet with breakaway ties.

6. Cluster and tie (breakaway technique) the sling legs in each sling set on top of the vehicle to prevent entanglement during hookup and lift-off.

Figure 2-25. Trojan Spirit Lite (V)2 Central Communications, AN/TSQ-226 (V)2 on M1113

CAUTION

Do not route the outside sling legs through the tailgate sling guides.

TACTICAL SUPER HIGH FREQUENCY (SHF) SATELLITE TERMINAL (TSST) ON M1113 HMMWV

2-28. The tactical super high frequency satellite terminal on M1113 is rigged for dual-point sling load using the following procedures:

- **Applicability.** The following item in Table 2-27 is certified for the helicopter(s) listed in the following table by the US Army Natick Soldier Center:

Table 2-27. Tactical Super High Frequency Satellite Terminal on M1113

Nomenclature	*Max Weight (Pounds)*	*Sling Set*	*Link Count Front/Rear*	*Type of Aircraft*
Tactical Super High Frequency Satellite Terminal on M1113	10,340	25K	40/3	CH-47

- **Materials.** The following materials are required to rig this load:
  - Sling set (25,000-pound capacity) with one additional apex fitting.
    - Additional chain length, part number 38850-00053-102, from a 25,000-pound capacity sling set (4 each).
    - Additional coupling link, part number 5779135, from a 25,000-pound capacity sling set (4 each).
  - Tape, adhesive, pressure-sensitive, 2-inch wide roll.
  - Cord, nylon, Type III, 550-pound breaking strength.
  - Webbing, cotton, 1/4-inch, 80-pound breaking strength.
  - Felt sheet, cattle hair, Type IV, 1/2-inch or suitable padding.
- **Personnel.** Two persons can prepare and rig this load in 25 minutes.
- **Procedures.** The following procedures apply to this load:
  - **Preparation.** Prepare the load using the following steps:
    - Extend the sling leg chains by connecting one additional chain length to each chain on a 25,000-pound capacity sling set with coupling links.
    - Fold mirrors forward inward and tie together with Type III nylon cord.
    - Secure all loose equipment on the primary mover with tape or Type III nylon cord. Close and secure all latches and handles with tape or Type III nylon cord. Secure all equipment and cargo inside the vehicle with tape, nylon cord, or lashings. Remove the doors and secure them inside the vehicle.
    - Ensure the fuel tank is not over 3/4 full. Inspect fuel tank cap, oil filler cap, and battery caps for proper installation.
    - Engage the vehicle parking brake and put the transmission in neutral.
    - Ensure the front wheels are pointed straight ahead. Tie down the steering wheel, using the securing device attached under the dashboard.
    - Tape the windshield in an X formation from corner to corner.
    - Tape all lights and instruments.
    - Pad the cooling fan shroud with felt or other suitable substitute.
  - **Rigging.** Rig the load according to the steps in Figure 2-26.
  - **Hookup.** The hookup team stands on top of the vehicle. The static wand person discharges the static electricity with the static wand. The forward hookup person places apex fitting 1 onto the forward cargo hook. The aft hookup person places apex fitting 2 onto the aft cargo hook. The hookup team then carefully dismounts the vehicle and remains close to the load as the helicopter removes slack from the sling legs. When successful hookup is assured, the hookup team quickly exits the area underneath the helicopter to the designated rendezvous point.
  - **Derigging.** Derigging is the reverse of the preparation and rigging procedures.

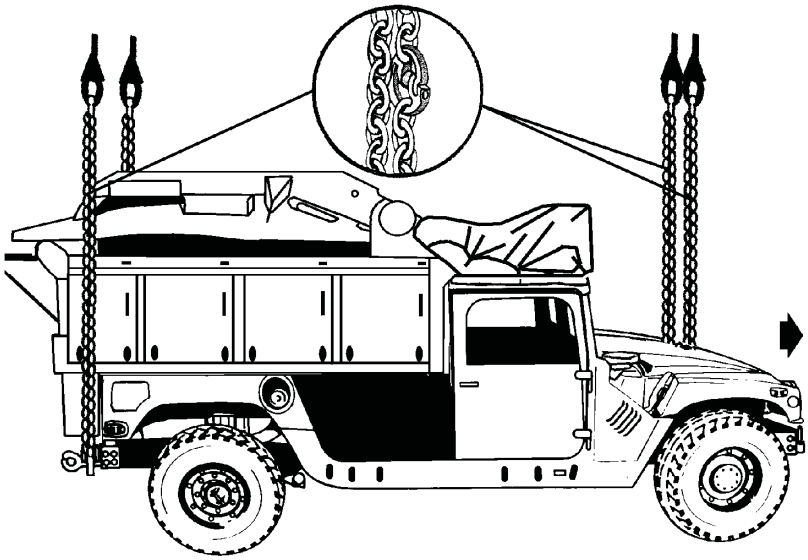

RIGGING STEPS

1. Connect 2 sling legs to apex fitting number 1. Position the apex fitting on top of the load above the satellite dish.

> **CAUTION**
> Do not step on the satellite dish.

2. Loop the chain end of the sling legs through their respective lift provisions that protrudes through the hood. Place the correct link from Table 2-27 in the grab hook. Secure all excess chain with tape or Type III nylon cord.

3. Position the left and right rear center sling guides so the open portion is facing the rear of the vehicle.

4. Connect 2 sling legs to apex fitting number 2. Position the apex fitting above the satellite dish.

5. Loop the left chain end through the top left rear corner sling guide and through the outboard left rear bumper lift provision and back through the top left corner sling guide. Place the correct links from Table 2-27 in the grab hook. Remove all slack in the chain and secure the chain to the top left corner sling guide with a double length of Type I, 1/4-inch cotton webbing. Secure the chain leg to the center sling guide with a length of Type I, 1/4-inch cotton webbing. Safety tie the chain leg every 2 feet with a length of Type I, 1/4-inch cotton webbing to points on the load. Repeat with the right sling leg through the top right rear center sling guide and the right rear lift provision. Secure all excess chain with tape or Type III nylon cord.

6. Cluster and tie (breakaway technique) the sling legs in each sling set on top of the vehicle to prevent entanglement during hookup and lift-off.

Figure 2-26. Tactical Super High Frequency Satellite Terminal on M1113

CAUTIONS

1. Do not use the lift shackles located near the center of the rear bumper for sling load lift provisions.

2. Ensure the outboard rear bumper lift provisions are installed correctly and there is a 2-inch clearance between the round portion of the lift provision and the end of the bumper when the lift provision is in the raised position.

TACTICAL SUPER SATELLITE TERMINAL (TSST) MOBILE POWER UNIT (MPU) ON M1113 HMMWV

2-29. The tactical super satellite terminal mobile power unit on M1113 is rigged for dual-point sling load using the following procedures:

- **Applicability.** The following item in Table 2-28 is certified for the helicopter(s) listed in the following table by the US Army Natick Soldier Center:

Table 2-28. Tactical Super Satellite Terminal Mobile Power Unit on M1113

Nomenclature	*Max Weight (Pounds)*	*Sling Set*	*Link Count Front/Rear*	*Type of Aircraft*
Tactical Super Satellite Terminal Mobile Power Unit on M1113	10,520	25K	20/3	CH-47

- **Materials.** The following materials are required to rig this load:
  - Sling set (25,000-pound capacity) with one additional apex fitting.
    - Additional chain length, part number 38850-00053-102, from a 25,000-pound capacity sling set (4 each).
    - Additional coupling link, part number 5779135, from a 25,000-pound capacity sling set (4 each).
    - Tape, adhesive, pressure-sensitive, 2-inch wide roll.
    - Cord, nylon, Type III, 550-pound breaking strength.
    - Webbing, cotton, 1/4-inch, 80-pound breaking strength.
    - Felt sheet, cattle hair, Type IV, 1/2-inch or suitable padding.
- **Personnel.** Two persons can prepare and rig this load in 25 minutes.
- **Procedures.** The following procedures apply to this load:
  - **Preparation.** Prepare the load using the following steps:
    - Extend the sling leg chains by connecting one additional chain length to each chain on a 25,000-pound capacity sling set with coupling links.
    - Fold mirrors forward inward and tie together with Type III nylon cord.
    - Secure all loose equipment inside the MPU with tape or Type III nylon cord. Close and secure all latches and handles with tape or Type III nylon cord.
    - Secure all equipment and cargo inside the vehicle with tape, nylon cord, or lashings. Remove the doors and secure them inside the vehicle.
    - Ensure the fuel tank is not over 3/4 full. Inspect fuel tank cap, oil filler cap, and battery caps for proper installation.
    - Engage the vehicle parking brake and put the transmission in neutral.

- Ensure the front wheels are pointed straight ahead. Tie down the steering wheel, using the securing device attached under the dashboard.
- Tape the windshield in an X formation from corner to corner.
- Tape all lights and instruments.
- Ensure all components and accessories of the MPU are in their original storage racks. Secure in place using the original tiedown straps and nets.

- **Rigging.** Rig the load according to the steps in Figure 2-27.
- **Hookup.** The hookup team stands on top of the vehicle. The static wand person discharges the static electricity with the static wand. The forward hookup person places apex fitting 1 onto the forward cargo hook. The aft hookup person places apex fitting 2 onto the aft cargo hook. The hookup team then carefully dismounts the vehicle and remains close to the load as the helicopter removes slack from the sling legs. When successful hookup is assured, the hookup team quickly exits the area underneath the helicopter to the designated rendezvous point.
- **Derigging.** Derigging is the reverse of the preparation and rigging procedures.

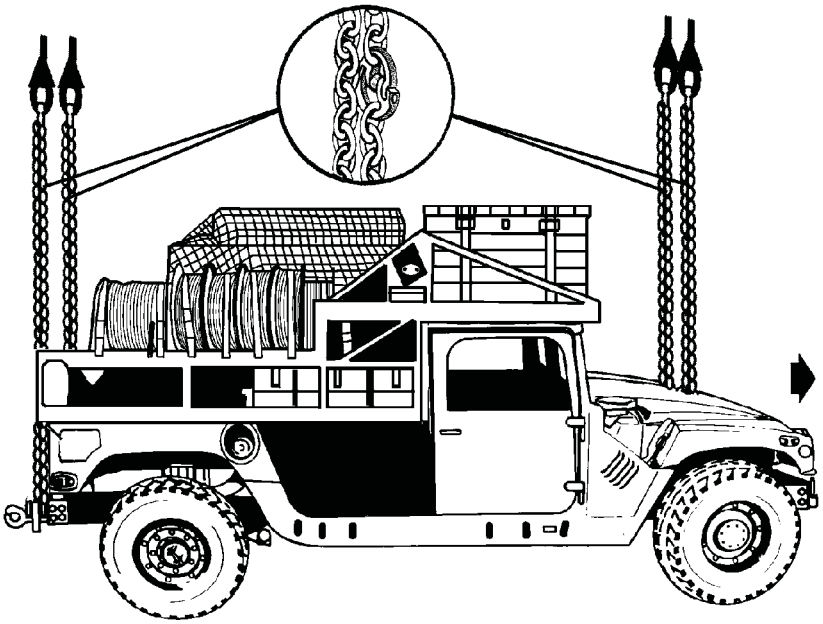

RIGGING STEPS

1. Connect 2 sling legs to apex fitting number 1. Position the apex fitting on top of the load above the satellite dish.

2. Loop the chain end of the sling legs through their respective lift provisions that protrudes through the hood. Place the correct link from Table 2-28 in the grab hook. Secure all excess chain with tape or Type III nylon cord.

3. Ensure the safety pins are installed in the two rear top sling guides.

4. Connect 2 sling legs to apex fitting number 2. Position the apex fitting above the satellite dish.

Figure 2-27. Tactical Super Satellite Terminal Mobile Power Unit on M1113

RIGGING STEPS (Continued)
5. Loop the left chain end through the rear top left sling guide and through the left rear lift provision and back through the top left corner sling guide. Place the correct links from Table 2-28 in the grab hook. Remove all slack in the chain and secure the chain to the top left sling guide with a double length of Type I, 1/4-inch cotton webbing. Safety tie the chain leg every 2 feet with a length of Type I, 1/4-inch cotton webbing to points on the load. Repeat with the right sling leg through the top right rear sling guide and the right rear lift provision. Secure all excess chain with tape or Type III nylon cord. 6. Cluster and tie (breakaway technique) the sling legs in each sling set on top of the vehicle to prevent entanglement during hookup and lift-off.

Figure 2-27. Tactical Super Satellite Terminal Mobile Power Unit on M1113 (Continued)

CAUTION

Do not use the outboard lift provisions on the bumper of the MPU.

AN/MRC-142B RADIO TERMINAL SET WITH 30M MAST ON M998 HMMWV

2-30. The AN/MRC-142B radio terminal set with 30M mast on M998 is rigged for dual-point sling load using the following procedures:

- **Applicability**. The following item in Table 2-29 is certified for the helicopter(s) listed in the following table by the US Army Natick Soldier Center:

Table 2-29. AN/MRC-142B Radio Terminal Set with 30M Mast on M998

Nomenclature	*Max Weight (Pounds)*	*Sling Set*	*Link Count Front/Rear*	*Type of Aircraft*
AN/MRC-142B Radio Terminal Set with 30M Mast on M998	7,500	15K	40/3	CH-53

- **Materials.** The following materials are required to rig this load:
  - Sling set (15,000-pound capacity) with one additional web ring.
  - Tape, adhesive, pressure-sensitive, 2-inch wide roll.
  - Cord, nylon, Type III, 550-pound breaking strength.
  - Webbing, cotton, 1/4-inch, 80-pound breaking strength.
- **Personnel.** Two persons can prepare and rig this load in 20 minutes.
- **Procedures.** The following procedures apply to this load:
  - **Preparation.** Prepare the load using the following steps:
    - Fold the mirrors inward for added protection and tie together with Type III nylon cord.
    - Remove the canvas cover and doors. Secure the canvas and doors inside the vehicle with tape, Type III nylon cord, or tiedown straps.
    - Secure all equipment and cargo inside the vehicle cab with tape, Type III nylon cord, or tiedown straps.
    - Ensure the fuel tank is not over 3/4 full. Inspect fuel tank cap, oil filler cap, and battery caps for proper installation.

- Engage the vehicle parking brake and put the transmission in neutral.
- Ensure the front wheels are pointed straight ahead. Tie down the steering wheel, using the securing device attached under the dashboard or type III nylon cord.
- Stow and secure the Shore Mounted Accessory Kit (SMAK) antenna mast. Install the mast cover and secure with tape.
- Rotate the antenna array dishes 180 degrees from the normal stowage position; so the curved sides are facing out.
- Ensure the offset adapters are stowed and secured.
- Ensure the left and right SMAK antenna arrays are secured in the normal stowage position.
- Secure the power amplifier case in the normal stowage location over right rear wheel well.
- Secure the cables on the spools on the left rear wheel well.
- Secure the universal power supply in normal stowage location between the front seats.
- Stow and secure radio equipment.
- Secure the rear roof bow in the rear most position to the SMAK antenna mast with Type III nylon cord.
- Tape the windshield in an X formation from corner to corner.

■ **Rigging.** Rig the load according to the steps in Figure 2-28.

■ **Hookup.** The hookup team stands in the bed of the vehicle. The static wand person discharges the static electricity with the static wand. The hookup person places the apex fitting on the cargo hook. The hookup team then carefully dismounts the vehicle and remains close to the load as the helicopter removes slack from the sling legs. When successful hookup is assured, the hookup team quickly exits the area underneath the helicopter to the designated rendezvous point.

■ **Derigging.** Derigging is the reverse of the preparation and rigging procedures.

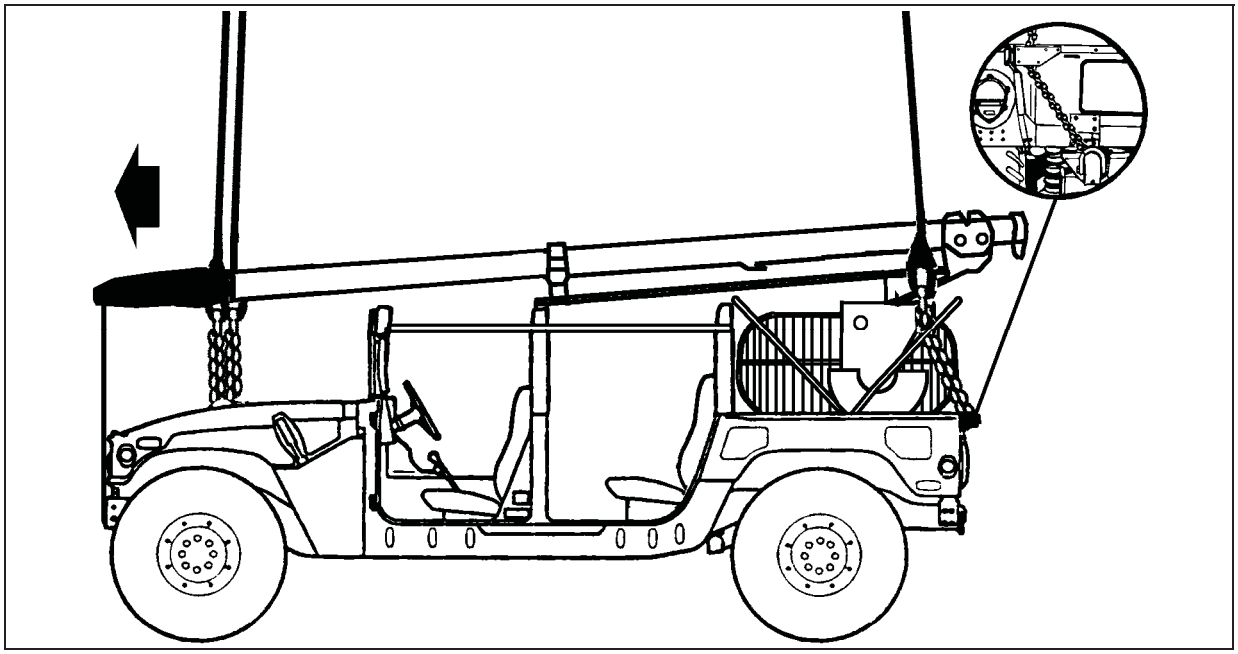

Figure 2-28. AN/MRC-142B Radio Terminal Set with 30M Mast on M998

RIGGING STEPS
1. Connect 2 sling legs to apex fitting number 1. Position the apex fitting on top of the SMAK antenna mast. 2. Loop the chain end of the sling legs through their respective lift provisions that protrudes through the hood. Place the correct link from Table 2-29 in the grab hook. Secure all excess chain with tape or Type III nylon cord. 3. Connect 2 sling legs to apex fitting number 2. Position the apex fitting on top of the SMAK antenna mast. 4. Route the chain end of sling leg 3 under the rear roof bow and through the eyelet opening in the upper left corner of the tailgate. Loop the chain end through the left lift provision on the bumper and thread back through the eyelet opening in the tailgate. Place the correct link from Table 2-29 in the grab hook. Repeat with sling leg 4 and the right rear lift provision. 5. Cluster and tie (breakaway technique) the sling legs in each sling set on top of the vehicle to prevent entanglement during hookup and lift-off.

Figure 2-28. AN/MRC-142B Radio Terminal Set with 30M Mast on M998 (Continued)

M998 (HMMWV) WITH TWO MRC-127 STACKS

2-31. The M998 with two MRC-127 stacks is rigged for dual-point sling load using the following procedures:

- **Applicability**. The following item in Table 2-30 is certified for the helicopter(s) listed in the following table by the US Army Natick Soldier Center:

Table 2-30. M998 with Two MRC-127 Stacks

Nomenclature	*Max Weight (Pounds)*	*Sling Set*	*Link Count Front/Rear*	*Type of Aircraft*
MRC-127 Stacks (Two) on M998	8,010	10K	80/3	CH-47

- **Materials.** The following materials are required to rig this load:
  - Sling set (10,000-pound capacity) with one additional apex fitting.
  - Tape, adhesive, pressure-sensitive, 2-inch wide roll.
  - Cord, nylon, Type III, 550-pound breaking strength.
  - Webbing, cotton, 1/4-inch, 80-pound breaking strength.
  - Felt sheet, cattle hair, Type IV, 1/2-inch or suitable padding.
- **Personnel.** Two persons can prepare and rig this load in 20 minutes.
- **Procedures.** The following procedures apply to this load:
  - **Preparation.** Prepare the load using the following steps:
    - Fold mirrors forward in front of the windshield for added protection and tie together with Type III nylon cord. Remove the canvas covering the bed of the truck. Fold the canvas and secure it over the windshield of the vehicle. Remove the doors and secure to the seats with Type III nylon cord.
    - Secure all equipment and cargo inside the vehicle with tape, nylon cord, or lashings. Remove the antennas and stow inside the vehicle.
    - Ensure the fuel tank is not over 3/4 full. Inspect fuel tank cap, oil filler cap, and battery caps for proper installation.

- Engage the vehicle parking brake and put the transmission in neutral.
- Ensure the front wheels are pointed straight ahead. Tie down the steering wheel, using the securing device attached under the dashboard.

- **Rigging.** Rig the load according to the steps in Figure 2-29.
- **Hookup.** The hookup team stands in the bed of the vehicle. The static wand person discharges the static electricity with the static wand. The forward hookup person places apex fitting 1 onto the forward cargo hook. The aft hookup person places apex fitting 2 onto the aft cargo hook. The hookup team then carefully dismounts the vehicle and remains close to the load as the helicopter removes slack from the sling legs. When successful hookup is assured, the hookup team quickly exits the area underneath the helicopter to the designated rendezvous point.
- **Derigging.** Derigging is the reverse of the preparation and rigging procedures.

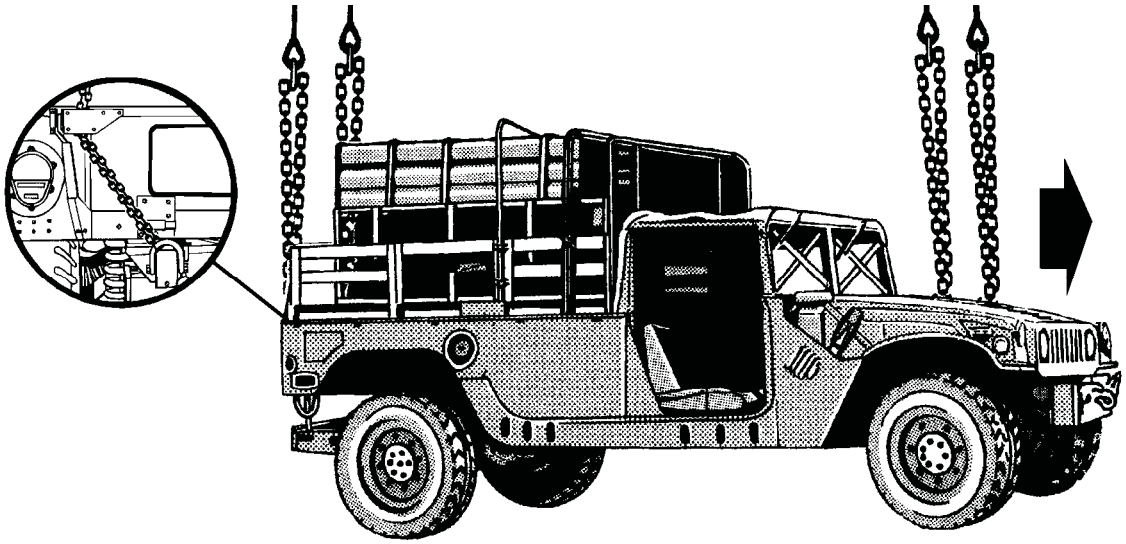

RIGGING STEPS

1. Connect 2 sling legs to apex fitting number 1. Position the apex fitting on the hood of the vehicle.

2. Loop the chain end of the sling legs through their respective lift provisions that protrudes through the hood. Place the correct link from Table 2-30 in the grab hook.

3. Connect 2 sling legs to apex fitting number 2. Position the apex fitting in the cargo bed of the vehicle.

4. Loop the chain end of the sling legs through their respective eyelet openings in the upper corner of the tailgate. Loop the chain end through the lift shackle on the rear bumper and thread back through the eyelet opening in the tailgate. Place the correct link from Table 2-30 in the grab hook.

Figure 2-29. M998 with Two MRC-127 Stacks

RIGGING STEPS (Continued)
5. Wrap the rear slings with padding where they contact the vehicle. 6. Secure all excess chain with tape or Type III nylon cord. 7. Cluster and tie (breakaway technique) the sling legs in each sling set on top of the vehicle to prevent entanglement during hookup and lift-off.

Figure 2-29. M998 with Two MRC-127 Stacks (Continued)

M998/M1038 (HMMWV) WITH LIGHTWEIGHT TACTICAL FIRE CONTROL SYSTEMS (LTACFIRE)/TACTICAL TERMINAL CONTROL SYSTEMS (TTCS)

2-32. The M998/M1038 with lightweight tactical fire control systems tactical terminal control systems are rigged for dual-point sling load using the following procedures:

- **Applicability.** The following items in Table 2-31 are certified for the helicopter(s) listed in the following table by the US Army Natick Soldier Center:

Table 2-31. M998/M1038 with Lightweight Tactical Fire Control Systems Tactical Terminal Control Systems

Nomenclature	*Max Weight (Pounds)*	*Sling Set*	*Link Count Front/Rear*	*Type of Aircraft*
LTACFIRE, Single Station	5,297	10K	40/3	CH-47
LTACFIRE, Dual Station	6,215	10K	40/3	CH-47
AN/TAQ-198 TTCS	6,015	10K	40/3	CH-47

- **Materials.** The following materials are required to rig this load:
  - Sling set (10,000-pound capacity) with one additional apex fitting.
  - Tape, adhesive, pressure-sensitive, 2-inch wide roll.
  - Cord, nylon, Type III, 550-pound breaking strength.
  - Webbing, cotton, 1/4-inch, 80-pound breaking strength.
- **Personnel.** Two persons can prepare and rig this load in 15 minutes.
- **Procedures.** The following procedures apply to this load:
  - **Preparation.** Prepare the load using the following steps:
    - Fold mirrors forward in front of the windshield for added protection and tie together with Type III nylon cord. Remove the canvas cab top and the doors. Secure to the seats with Type III nylon cord.
    - Secure all equipment and cargo inside the vehicle with tape, nylon cord, or lashings.
    - Ensure the fuel tank is not over 3/4 full. Inspect fuel tank cap, oil filler cap, and battery caps for proper installation.
    - Engage the vehicle parking brake and put the transmission in neutral.
    - Ensure the front wheels are pointed straight ahead. Tie down the steering wheel, using the securing device attached under the dashboard.
  - **Rigging.** Rig the load according to the steps in Figure 2-30.
  - **Hookup.** The hookup team stands in the bed of the vehicle. The static wand person discharges the static electricity with the static wand. The forward hookup person places apex fitting 1 onto the forward cargo hook. The aft hookup person places apex fitting 2 onto the aft

cargo hook. The hookup team then carefully dismounts the vehicle and remains close to the load as the helicopter removes slack from the sling legs. When successful hookup is assured, the hookup team quickly exits the area underneath the helicopter to the designated rendezvous point.

- **Derigging.** Derigging is the reverse of the preparation and rigging procedures.

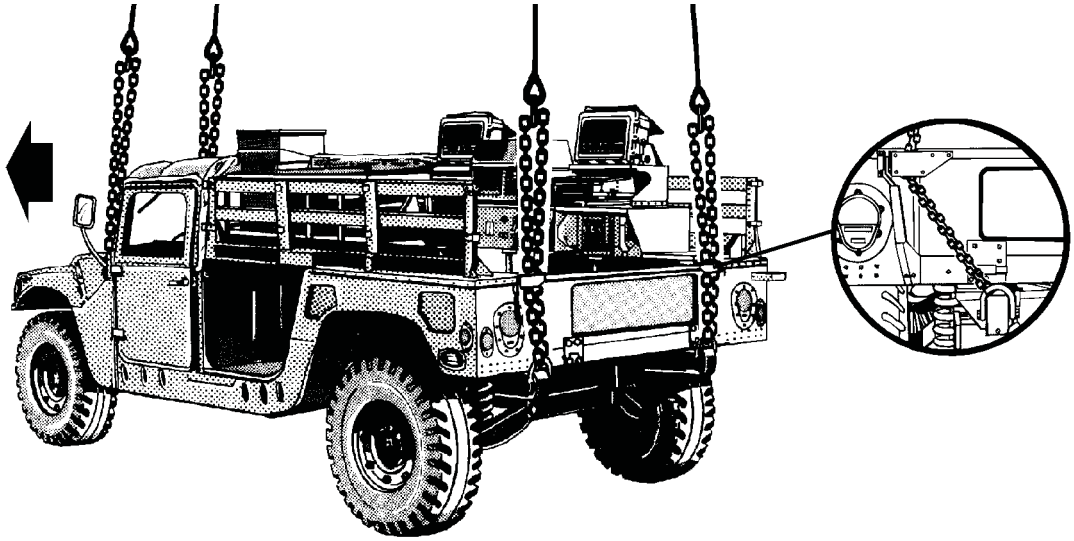

RIGGING STEPS

1. Connect 2 sling legs to apex fitting number 1. Position the apex fitting on the hood of the vehicle.

2. Loop the chain end of the sling legs through their respective lift provisions that protrudes through the hood. Place the correct link from Table 2-31 in the grab hook.

3. Connect 2 sling legs to apex fitting number 2. Position the apex fitting in the cargo bed of the vehicle.

4. Loop the chain end of the sling legs through their respective eyelet openings in the upper corner of the tailgate. Loop the chain end through the lift shackle on the rear bumper and thread back through the eyelet opening in the tailgate. Place the correct link from Table 2-31 in the grab hook.

5. Secure all excess chain with tape or Type III nylon cord.

6. Cluster and tie (breakaway technique) the sling legs in each sling set on top of the vehicle to prevent entanglement during hookup and lift-off.

Figure 2-30. M998/M1038 with Lightweight Tactical Fire Control Systems Tactical Terminal Control Systems

M1097A2 (HMMWV) WITH ADVANCED FIELD ARTILLERY TACTICAL DATA SYSTEM (AFATDS) FULL SIZE OR PARTIAL SOFT TOP INSTALLATION KIT (STIK)

2-33. The M1097A2 with advanced field artillery tactical data system full size or partial soft top installation kit is rigged for dual-point sling load using the following procedures:

- **Applicability.** The following items in Table 2-32 are certified for the helicopter(s) listed in the following table by the US Army Natick Soldier Center:

Table 2-32. M1097A2 with Advanced Field Artillery Tactical Data System Full Size or Partial Soft Top Installation Kit

Nomenclature	*Max Weight (Pounds)*	*Sling Set*	*Link Count Front/Rear*	*Type of Aircraft*
System 2: CHS-2 AN/GYG-3(V)1, with SINGARS AN/VRC-90, AN/VRC-92 and EPLRS Installed in the Bed. AN/VRC-92 Installed in Cab.	8,103	10K	50/3	CH-47
System 3: CHS-2 AN/GYG-3(V)3, with SINGARS AN/VRC-90, AN/VRC-92 and EPLRS Installed in the Bed. AN/VRC-92 Installed in Cab.	8,366	10K	50/3	CH-47
System 4: 2 each AN/GYK-37(V)2, with SINGARS AN/VRC-89, AN/VRC-92 and EPLRS.	7,790	10K	50/3	CH-47

- **Materials.** The following materials are required to rig this load:
  - Sling set (10,000-pound capacity) with one additional apex fitting.
    - Additional chain length, part number 38850-00053-101, from a 10,000-pound capacity sling set (4 each).
    - Additional coupling link, part number 5779125, from a 10,000-pound capacity sling set (4 each).
  - Tape, adhesive, pressure-sensitive, 2-inch wide roll.
  - Cord, nylon, Type III, 550-pound breaking strength.
  - Webbing, cotton, 1/4-inch, 80-pound breaking strength.
  - Padding, cellulose.
- **Personnel.** Two persons can prepare and rig this load in 10 minutes.
- **Procedures.** The following procedures apply to this load:
  - **Preparation.** Prepare the load using the following steps:
    - Extend the sling leg chains by connecting one additional chain length to each chain on a 10,000-pound capacity sling set with coupling links.
    - Fold mirrors forward in front of the windshield for added protection and tie together with Type III nylon cord.
    - Secure all equipment and cargo inside the vehicle with tape, nylon cord, or lashings. Remove and secure the doors in the front of the vehicle.
    - Ensure the fuel tank is not over 3/4 full. Inspect fuel tank cap, oil filler cap, and battery caps for proper installation.
    - Engage the vehicle parking brake and put the transmission in neutral.
    - Ensure the front wheels are pointed straight ahead. Tie down the steering wheel, using the securing device attached under the dashboard.
    - Tape the windshield in an X formation from corner to corner.

- Install the lift provisions on the outer ends of the rear bumper.
- Extend the sling leg chains by connecting one additional chain length to each chain using the coupling links.

- **Rigging.** Rig the load according to the steps in Figure 2-31.
- **Hookup.** The hookup team stands on top of the vehicle. The static wand person discharges the static electricity with the static wand. The forward hookup person places apex fitting 1 onto the forward cargo hook. The aft hookup person places apex fitting 2 onto the aft cargo hook. The hookup team then carefully dismounts the vehicle and remains close to the load as the helicopter removes slack from the sling legs. When successful hookup is assured, the hookup team quickly exits the area underneath the helicopter to the designated rendezvous point.
- **Derigging.** Derigging is the reverse of the preparation and rigging procedures.

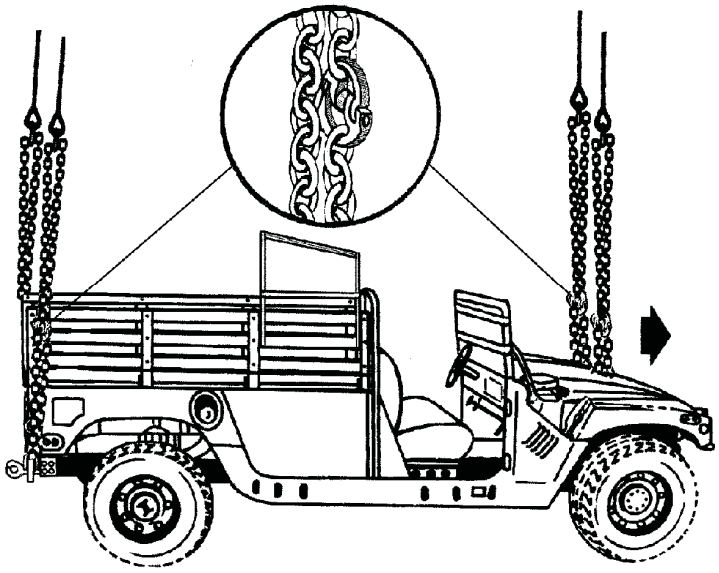

RIGGING STEPS

1. Connect 2 sling legs to apex fitting number 1. Position the apex fitting on top of the shelter.
2. Loop the chain end of the sling legs through their respective lift provisions that protrudes through the hood. Place the correct link from Table 2-32 in the grab hook.
3. Connect 2 sling legs to apex fitting number 2. Position the apex fitting on top of the shelter.
4. Loop the chain end of the sling legs through their respective lift provisions located on the outer ends of the rear bumper. Place the correct link from Table 2-32 in the grab hook.
5. Secure all excess chain with tape or Type III nylon cord.
6. Cluster and tie (breakaway technique) the sling legs in each sling set on top of the vehicle to prevent entanglement during hookup and lift-off.

Figure 2-31. M1097A2 with Advanced Field Artillery Tactical Data System Full Size or Partial Soft Top Installation Kit

CAUTION

Do not use the lift shackles located near the center of the rear bumper for sling load lift provisions.

M1037 (HMMWV) WITH AN/TPQ-36 FIREFINDER GENERATOR PALLET

2-34. The M1037 with AN/TPQ-36 Firefinder generator pallet is rigged for dual-point sling load using the following procedures:

- **Applicability.** The following item in Table 2-33 is certified for the helicopter(s) listed in the following table by the US Army Natick Soldier Center:

Table 2-33. M1037 with AN/TPQ-36 Firefinder Generator Pallet

Nomenclature	*Max Weight (Pounds)*	*Sling Set*	*Link Count Front/Rear*	*Type of Aircraft*
AN/TPQ-36 Firefinder Generator Pallet	7,700	10K	80/45	CH-47

- **Materials.** The following materials are required to rig this load:
  - Sling set (10,000-pound capacity) with one additional apex fitting.
  - Tape, adhesive, pressure-sensitive, 2-inch wide roll.
  - Cord, nylon, Type III, 550-pound breaking strength.
  - Webbing, cotton, 1/4-inch, 80-pound breaking strength.
- **Personnel.** Two persons can prepare and rig this load in 15 minutes.
- **Procedures.** The following procedures apply to this load:
  - **Preparation.** Prepare the load using the following steps:
    - Fold mirrors forward in front of the windshield for added protection and tie together with Type III nylon cord. Remove the canvas cab top and the doors. Secure to the seats with Type III nylon cord.
    - Ensure the generator is secured to the truck. Secure all lids, doors, and vents on the generator with tape or Type III nylon cord. Safety tie all chains and hoses with tape or Type III nylon cord.
    - Secure all equipment and cargo inside the vehicle with tape, nylon cord, or lashings.
    - Ensure the fuel tank is not over 3/4 full. Inspect fuel tank cap, oil filler cap, and battery caps for proper installation.
    - Engage the vehicle parking brake and put the transmission in neutral.
    - Ensure the front wheels are pointed straight ahead. Tie down the steering wheel, using the securing device attached under the dashboard.
    - Tape the windshield in an X formation from corner to corner.
  - **Rigging.** Rig the load according to the steps in Figure 2-32.
  - **Hookup.** The hookup team stands in the bed of the vehicle. The static wand person discharges the static electricity with the static wand. The forward hookup person places apex fitting 1 onto the forward cargo hook. The aft hookup person places apex fitting 2 onto the aft cargo hook. The hookup team then carefully dismounts the vehicle and remains close to the load as the helicopter removes slack from the sling legs. When successful hookup is assured, the hookup team quickly exits the area underneath the helicopter to the designated rendezvous point.
  - **Derigging.** Derigging is the reverse of the preparation and rigging procedures.

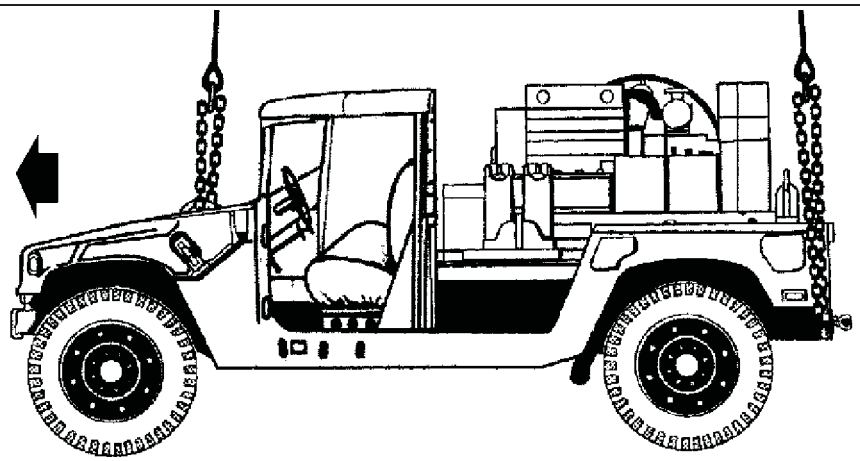

RIGGING STEPS

1. Connect 2 sling legs to apex fitting number 1. Position the apex fitting on the hood of the vehicle.
2. Loop the chain end of the sling legs through their respective lift provisions that protrudes through the hood. Place the correct link from Table 2-33 in the grab hook.
3. Connect 2 sling legs to apex fitting number 2. Position the apex fitting in the cargo bed of the vehicle.
4. Loop the chain end of the sling legs through their respective lift shackle on the outside end of the rear bumper. Place the correct link from Table 2-33 in the grab hook.
5. Secure all excess chain with tape or Type III nylon cord.
6. Cluster and tie (breakaway technique) the sling legs in each sling set on top of the vehicle to prevent entanglement during hookup and lift-off.

Figure 2-32. M1037 with AN/TPQ-36 Firefinder Generator Pallet

CAUTION

Do not use the lift shackles located near the center of the rear bumper for sling load lift provisions.

M998 HMMWV WITH MAN PORTABLE AIR DEFENSE SYSTEMS (MANPADS)

2-35. The M998 with man portable air defense systems is rigged for dual-point sling load using the following procedures:

- **Applicability**. The following item in Table 2-34 is certified for the helicopter(s) listed in the following table by the US Army Natick Soldier Center:

Table 2-34. M998 with Man Portable Air Defense Systems

Nomenclature	*Max Weight (Pounds)*	*Sling Set*	*Link Count Front/Rear*	*Type of Aircraft*
Man Portable Air Defense Systems on M998	7,700	10K	40/3	CH-47

- **Materials.** The following materials are required to rig this load:
  - Sling set (10,000-pound capacity) with one additional apex fitting.
  - Tape, adhesive, pressure-sensitive, 2-inch wide roll.
  - Cord, nylon, Type III, 550-pound breaking strength.
  - Webbing, cotton, 1/4-inch, 80-pound breaking strength.
- **Personnel.** Two persons can prepare and rig this load in 15 minutes.
- **Procedures.** The following procedures apply to this load:
  - **Preparation.** Prepare the load using the following steps:
    - Fold mirrors forward in front of the windshield for added protection and tie together with Type III nylon cord. Secure the doors.
    - Secure all equipment and cargo inside the vehicle with tape, Type III nylon cord, or lashings.
    - Ensure the fuel tank is not over 3/4 full. Inspect fuel tank cap, oil filler cap, and battery caps for proper installation.
    - Engage the vehicle parking brake and put the transmission in neutral.
    - Ensure the front wheels are pointed straight ahead. Tie down the steering wheel, using the securing device attached under the dashboard.
  - **Rigging.** Rig the load according to the steps in Figure 2-33.
  - **Hookup.** The static wand person discharges the static electricity with the static wand. The forward hookup person places apex fitting 1 onto the forward cargo hook. The aft hookup person places apex fitting 2 onto the aft cargo hook. The hookup team then carefully dismounts the vehicle and remains close to the load as the helicopter removes slack from the sling legs. When successful hookup is assured, the hookup team quickly exits the area underneath the helicopter to the designated rendezvous point.
  - **Derigging.** Derigging is the reverse of the preparation and rigging procedures.

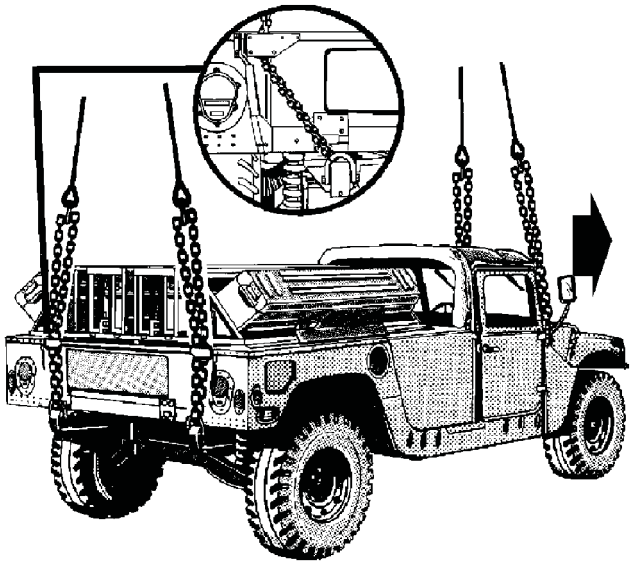

RIGGING STEPS

1. Connect 2 sling legs to apex fitting number 1. Position the apex fitting on the hood of the vehicle.

2. Loop the chain end of the sling legs through their respective lift provisions that protrudes through the hood. Place the correct link from Table 2-34 in the grab hook.

3. Connect 2 sling legs to apex fitting number 2. Position the apex fitting on top of the shelter.

4. Loop the chain end of the sling legs through their respective eyelet openings in the upper corner of the tailgate. Loop the chain end through the lift shackle on the rear bumper and thread back through the eyelet opening in the tailgate. Place the correct link from Table 2-34 in the grab hook.

5. Secure all excess chain with tape or Type III nylon cord.

6. Cluster and tie (breakaway technique) the sling legs in each sling set on top of the vehicle to prevent entanglement during hookup and lift-off.

Figure 2-33. M998 with Man Portable Air Defense Systems

M1097 (H-HMMWV) WITH AN/TPQ-42, METEOROLOGICAL HYDROGEN GENERATOR (MHG)

2-36. The M1097 with AN/TPQ-42, meteorological hydrogen generator is rigged for dual-point sling load using the following procedures:

- **Applicability**. The following item in Table 2-35 is certified for the helicopter(s) listed in the following table by the US Army Natick Soldier Center:

Table 2-35. M1097 with AN/TPQ-42, Meteorological Hydrogen Generator

Nomenclature	*Max Weight (Pounds)*	*Sling Set*	*Link Count Front/Rear*	*Type of Aircraft*
AN/TPQ-42 Meteorological Hydrogen Generator	10,000	10K 15K	40/3 25/3	CH-47 CH-53

- **Materials.** The following materials are required to rig this load:
  - Sling set (10,000-pound capacity) with one additional apex fitting.

    OR
  - Multileg sling set with one additional web ring.
  - Tape, adhesive, pressure-sensitive, 2-inch wide roll.
  - Cord, nylon, Type III, 550-pound breaking strength.
  - Webbing, cotton, 1/4-inch, 80-pound breaking strength.
- **Personnel.** Three persons can prepare and rig this load in 20 minutes.
- **Procedures.** The following procedures apply to this load:
  - **Preparation.** Prepare the load using the following steps:
    - Fold mirrors forward in front of the windshield for added protection and tie together with Type III nylon cord.
    - Secure all equipment and cargo inside the vehicle with tape, nylon cord, or lashings. Secure the doors shut if installed.
    - Ensure the fuel tank is not over 3/4 full. Inspect fuel tank cap, oil filler cap, and battery caps for proper installation.
    - Engage the vehicle parking brake and put the transmission in neutral.
    - Ensure the front wheels are pointed straight ahead. Tie down the steering wheel, using the securing device attached under the dashboard.
  - **Rigging.** Rig the load according to the steps in Figure 2-34.
  - **Hookup.** The hookup team stands in the rear of the vehicle. The static wand person discharges the static electricity with the static wand. The forward hookup person places apex fitting 1 onto the forward cargo hook. The aft hookup person places apex fitting 2 onto the aft cargo hook. The hookup team then carefully dismounts the vehicle and remains close to the load as the helicopter removes slack from the sling legs. When successful hookup is assured, the hookup team quickly exits the area underneath the helicopter to the designated rendezvous point.
  - **Derigging.** Derigging is the reverse of the preparation and rigging procedures.

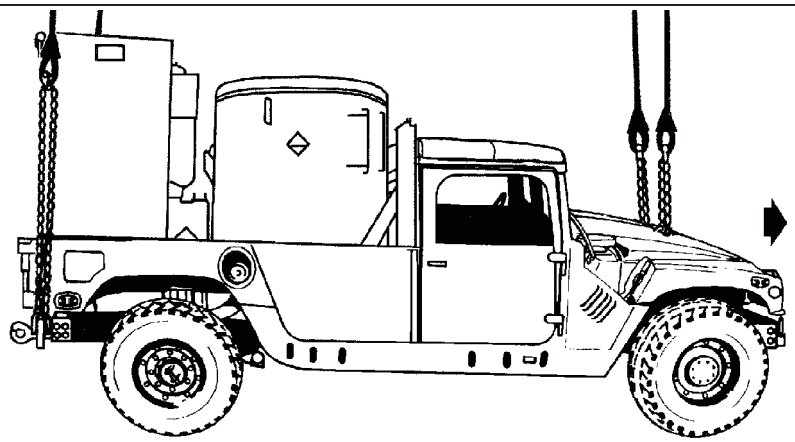

Figure 2-34. M1097 with AN/TPQ-42, Meteorological Hydrogen Generator

RIGGING STEPS
1. Connect 2 sling legs to apex fitting number 1. Position the apex fitting on the hood of the vehicle. 2. Loop the chain end of the sling legs through their respective lift provisions that protrudes through the hood. Place the correct link from Table 2-35 in the grab hook. 3. Connect 2 sling legs to apex fitting number 2. Position the apex fitting in the bed of the vehicle. 4. Loop the chain end of the sling legs through their respective lift shackle on the outside end of the rear bumper. Place the correct link from Table 2-35 in the grab hook. 5. Secure all excess chain with tape or Type III nylon cord. 6. Cluster and tie (breakaway technique) the sling legs in each sling set on top of the vehicle to prevent entanglement during hookup and lift-off.

Figure 2-34. M1097 with AN/TPQ-42, Meteorological Hydrogen Generator (Continued)

CAUTION

Do not use the lift shackles located near the center of the rear bumper for sling load lift provisions.

M1037 (H-HMMWV) WITH COMPRESSED AIR-FOAM SYSTEM, MOBILE (CAFSM)

2-37. The M1037 with compressed air-foam system, mobile is rigged for dual-point sling load using the following procedures:

- **Applicability**. The following item in Table 2-36 is certified for the helicopter(s) listed in the following table by the US Army Natick Soldier Center:

Table 2-36. M1037 with Compressed Air-Foam System, Mobile

Nomenclature	*Max Weight (Pounds)*	*Sling Set*	*Link Count Front/Rear*	*Type of Aircraft*
Compressed Air-Foam System, Mobile on M1037 (Empty)	6,400	15K	40/3	CH-53

- **Materials.** The following materials are required to rig this load:
  - Multileg sling set with one additional web ring.
  - Tape, adhesive, pressure-sensitive, 2-inch wide roll.
  - Cord, nylon, Type III, 550-pound breaking strength.
  - Webbing, cotton, 1/4-inch, 80-pound breaking strength.
- **Personnel.** Three persons can prepare and rig this load in 15 minutes.
- **Procedures.** The following procedures apply to this load:

- **Preparation.** Prepare the load using the following steps:
  - Fold mirrors forward in front of the windshield for added protection and tie together with Type III nylon cord. Remove the canvas top and doors. Secure to the seats with Type III nylon cord.
  - Ensure the CAFSM is secured to the truck. Secure all lids, doors, and vents on the CAFSM with tape or Type III nylon cord. Safety tie all chains and hoses with tape or Type III nylon cord.
  - Secure all equipment and cargo inside the vehicle with tape, nylon cord, or lashings. Secure the doors shut if installed.
  - Ensure the fuel tank is not over 3/4 full. Inspect fuel tank cap, oil filler cap, and battery caps for proper installation.
  - Engage the vehicle parking brake and put the transmission in neutral.
  - Ensure the front wheels are pointed straight ahead. Tie down the steering wheel, using the securing device attached under the dashboard.
  - Tape the windshield in an X formation from corner to corner.
- **Rigging.** Rig the load according to the steps in Figure 2-35.
- **Hookup.** The hookup team stands in the rear of the vehicle. The static wand person discharges the static electricity with the static wand. The forward hookup person places apex fitting 1 onto the forward cargo hook. The aft hookup person places apex fitting 2 onto the aft cargo hook. The hookup team then carefully dismounts the vehicle and remains close to the load as the helicopter removes slack from the sling legs. When successful hookup is assured, the hookup team quickly exits the area underneath the helicopter to the designated rendezvous point.
- **Derigging.** Derigging is the reverse of the preparation and rigging procedures.

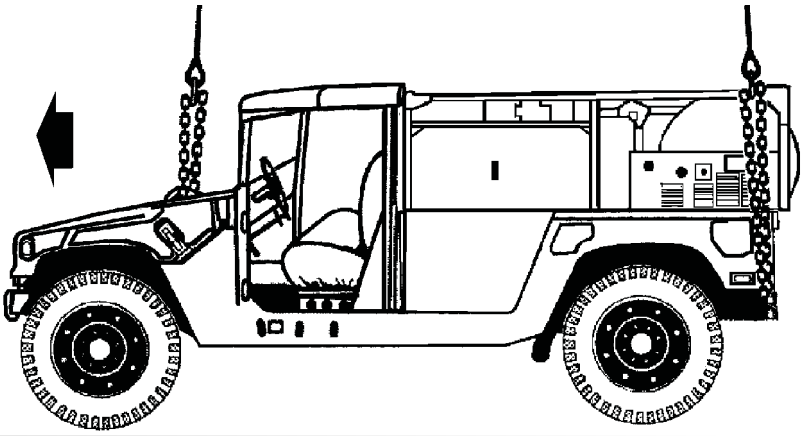

RIGGING STEPS

1. Connect 2 sling legs to apex fitting number 1. Position the apex fitting on the hood of the vehicle.

2. Loop the chain end of the sling legs through their respective lift provisions that protrudes through the hood. Place the correct link from Table 2-36 in the grab hook.

3. Connect 2 sling legs to apex fitting number 2. Position the apex fitting in the bed of the vehicle.

4. Loop the chain end of the sling legs through their respective lift shackle on the outside end of the rear bumper. Place the correct link from Table 2-36 in the grab hook.

Figure 2-35. M1037 with Compressed Air-Foam System, Mobile

RIGGING STEPS (Continued)
5. Secure all excess chain with tape or Type III nylon cord. 6. Cluster and tie or tape (breakaway technique) the sling legs in each sling set on top of the vehicle to prevent entanglement during hookup and lift-off.

Figure 2-35. M1037 with Compressed Air-Foam System, Mobile (Continued)

CAUTION

Do not use the lift shackles located near the center of the rear bumper for sling load lift provisions.

M1113 (HMWWV) WITH PETROLEUM QUALITY ANALYSIS SYSTEM (PQAS) SHELTER

2-38. The M1113 with petroleum quality analysis system shelter is rigged for dual-point sling load using the following procedures:

- **Applicability**. The following item in Table 2-37 is certified for the helicopter(s) listed in the following table by the US Army Natick Soldier Center:

Table 2-37. M1113 with Petroleum Quality Analysis System Shelter

Nomenclature	*Max Weight (Pounds)*	*Sling Set*	*Link Count Front/Rear*	*Type of Aircraft*
Petroleum Quality Analysis System Shelter on M1113	9,460	25K	30/3	CH-47

- **Materials.** The following materials are required to rig this load:
  - Sling set (25,000-pound capacity) with one additional apex fitting.
    - Additional chain length, part number 38850-00053-102, from a 25,000-pound capacity sling set (4 each).
    - Additional coupling link, part number 5779135, from a 25,000-pound capacity sling set (4 each).
  - Tape, adhesive, pressure-sensitive, 2-inch wide roll.
  - Cord, nylon, Type III, 550-pound breaking strength.
  - Webbing, cotton, 1/4-inch, 80-pound breaking strength.
  - Webbing, nylon, 1/2-inch, 1000-pound breaking strength.
- **Personnel.** Two persons can prepare and rig this load in 20 minutes.
- **Procedures.** The following procedures apply to this load:
  - **Preparation.** Prepare the load using the following steps:
    - Extend the sling leg chains by connecting one additional chain length to each chain on a 25,000-pound capacity sling set with coupling links.
    - Fold mirrors forward inward and tie together with Type III nylon cord.
    - Secure all loose equipment inside the shelter with tape or Type III nylon cord and tiedown straps. Close and secure the rear access door. Lower the roof to the stop and pin in position. Secure the pins in place with tape.
    - Secure all equipment inside the truck or on the roof rack with tape, Type III nylon cord, or tiedown straps.
    - Ensure the fuel tank is not over 3/4 full. Inspect fuel tank cap, oil filler cap, and battery caps for proper installation.

- Engage the vehicle parking brake and put the transmission in neutral.
- Ensure the front wheels are pointed straight ahead. Tie down the steering wheel, using the securing device attached under the dashboard.
- Tape the windshield in an X formation from corner to corner.
- Roll up and secure the large canvas covers on top of the shelter. Tape the small canvas covers down.
- Tape the windshield in an X formation from corner to corner.

- **Rigging.** Rig the load according to the steps in Figure 2-36.
- **Hookup.** The hookup team stands on top of the shelter. The static wand person discharges the static electricity with the static wand. The forward hookup person places apex fitting 1 onto the forward cargo hook. The aft hookup person places apex fitting 2 onto the aft cargo hook. The hookup team then carefully dismounts the vehicle and remains close to the load as the helicopter removes slack from the sling legs. When successful hookup is assured, the hookup team quickly exits the area underneath the helicopter to the designated rendezvous point.
- **Derigging.** Derigging is the reverse of the preparation and rigging procedures.

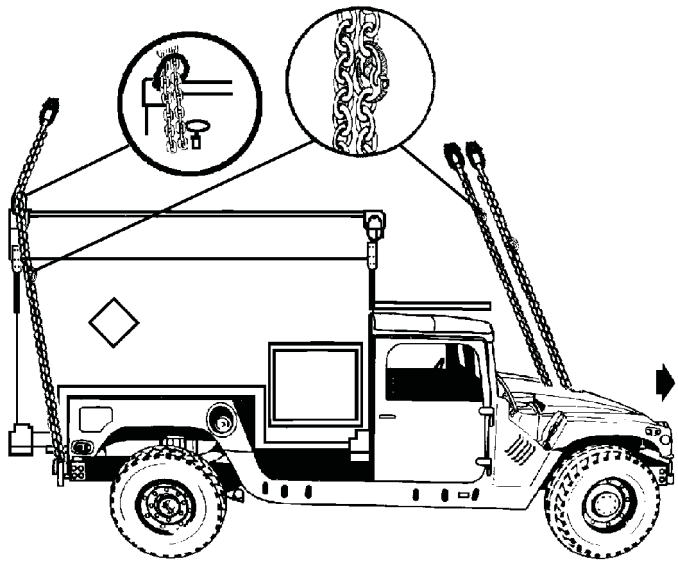

RIGGING STEPS

1. Connect 2 sling legs to apex fitting number 1. Position the apex fitting on top of the shelter.
2. Loop the chain end of the sling legs through their respective lift provisions that protrudes through the hood. Place the correct link from Table 2-37 in the grab hook.
3. Connect 2 sling legs to apex fitting number 2. Position the apex fitting on top of the shelter.

Figure 2-36. M1113 with Petroleum Quality Analysis System Shelter

RIGGING STEPS (Continued)
4. Route the right sling leg chain through the right rear shelter lift ring (inboard to outboard) to the right rear lift provision located on the outer end of the rear bumper. Continue routing the chain back through the right rear shelter lift ring (outboard to inboard) and back to the grab hook. Place the correct link from Table 2-37 in the grab hook. Repeat the procedure using the left sling leg chain, left rear shelter lift ring, and the left lift provision located on the end of the bumper. 5. Remove all the excess slack between the lift provisions and the shelter lift rings. 6. Secure all excess chain with tape or Type III nylon cord. 7. Cluster and tie (breakaway technique) the sling legs in each sling set on top of the vehicle to prevent entanglement during hookup and lift-off.

Figure 2-36. M1113 with Petroleum Quality Analysis System Shelter (Continued)

M1123 CARGO/TROOP CARRIER (HMMWV) WITH MARINE ARMOR KIT, FULLY ARMORED TROOP SECTION (USMC)

2-39. The M1123 cargo/troop carrier with Marine Armor Kit, fully armored troop section is rigged for dual-point sling load using the following procedures:

- **Applicability.** The following item in Table 2-38 is certified for the helicopter(s) listed in the following table by the US Army Natick Soldier Center:

Table 2-38. M1123 Cargo/Troop Carrier with Marine Armor Kit, Fully Armored Troop Section

Nomenclature	*Max Weight (Pounds)*	*Sling Set*	*Link Count Front/Rear*	*Type of Aircraft*
M1123 Cargo/Troop Carrier with MAK Fully Armored Troop Section	10,300	15K	35/3	CH-53

- **Materials.** The following materials are required to rig this load:
  - Sling set (15,000-pound capacity) with one additional web ring.
    - Additional chain length, from a 15,000-pound capacity sling set (4 each).
    - Additional coupling link, from a 15,000-pound sling set (4 each).
  - Tape, adhesive, pressure-sensitive, 2-inch wide roll.
  - Cord, nylon, Type III, 550-pound breaking strength.
  - Webbing, cotton, 1/4-inch, 80-pound breaking strength.
  - Felt sheet, cattle hair, Type IV, 1/2-inch or suitable padding.
- **Personnel.** Two persons can prepare and rig this load in 15 minutes.
- **Procedures.** The following procedures apply to this load:
  - **Preparation.** Prepare the load using the following steps:
    - Extend the sling leg chains by connecting one additional chain lengths to each chain on a 15,000-pound capacity sling set with a coupling link.
    - Fold mirrors forward inward and tie together with Type III nylon cord.
    - Secure all equipment and cargo inside the vehicle with tape, nylon cord, or lashings. Remove antennas and stow inside the vehicle. Secure the doors shut.

- Ensure the fuel tank is not over 3/4 full. Inspect fuel tank cap, oil filler cap, and battery caps for proper installation.
- Engage the vehicle parking brake and put the transmission in neutral.
- Ensure the front wheels are pointed straight ahead. Tie down the steering wheel, using the securing device attached under the dashboard.
- Secure the doors and door handles on the armored troop section with Type III nylon cord.

- **Rigging.** Rig the load according to the steps in Figure 2-37.
- **Hookup.** The hookup team stands on top of the vehicle. The static wand person discharges the static electricity with the static wand. The forward hookup person places apex fitting 1 onto the forward cargo hook. The aft hookup person places apex fitting 2 onto the aft cargo hook. The hookup team then carefully dismounts the vehicle and remains close to the load as the helicopter removes slack from the sling legs. When successful hookup is assured, the hookup team quickly exits the area underneath the helicopter to the designated rendezvous point.
- **Derigging.** Derigging is the reverse of the preparation and rigging procedures.

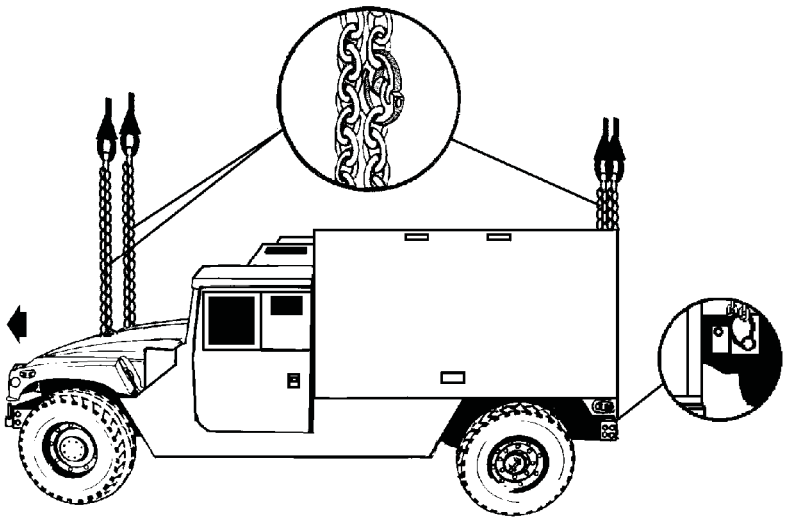

RIGGING STEPS

1. Connect 2 sling legs to web ring number 1. Position the web ring on top of the vehicle.
2. Loop the chain end of the sling legs through their respective lift provisions that protrudes through the hood. Place the correct link from Table 2-38 in the grab hook. Secure all excess chain with tape or Type III nylon cord.
3. Connect 2 sling legs to web ring number 2. Position the web ring on top of the shelter.
4. Loop the chain end through the respective lift provision located on the rear of the vehicle, near the center. Place the correct links from Table 2-38 in the grab hooks. Secure all excess chain with tape or Type III nylon cord.
5. Cluster and tie (breakaway technique) the sling legs in each sling set on top of the vehicle to prevent entanglement during hookup and lift-off.

Figure 2-37. M1123 Cargo/Troop Carrier with Marine Armor Kit, Fully Armored Troop Section

INTERIM FAST ATTACK VEHICLE TRUCK (IFAV), LONG WHEEL BASE

2-40. The interim fast attack vehicle truck, long wheel base is rigged for dual-point sling load using the following procedures:

- **Applicability**. The following item in Table 2-38 is certified for the helicopter(s) listed in the following table by the US Army Natick Soldier Center:

Table 2-39. Interim Fast Attack Vehicle Truck, Long Wheel Base

Nomenclature	*Max Weight (Pounds)*	*Sling Set*	*Link Count Front/Rear*	*Type of Aircraft*
Interim Fast Attack Vehicle Truck, Long Wheel Base	5,720	15K	40/3	CH-53

- **Materials.** The following materials are required to rig this load:
  - Sling set (15,000-pound capacity for the CH-53 only) with one additional web ring.
  - Tape, adhesive, pressure-sensitive, 2-inch wide roll.
  - Cord, nylon, Type III, 550-pound breaking strength.
  - Webbing, cotton, 1/4-inch, 80-pound breaking strength.
  - Padding, cellulose.
- **Personnel.** Two persons can prepare and rig this load in 10 minutes.
- **Procedures.** The following procedures apply to this load:
  - **Preparation.** Prepare the load using the following steps:
    - Fold mirrors forward in front of the windshield for added protection and tie together with Type III nylon cord. Remove all canvas covers.
    - Secure all equipment and cargo inside the vehicle with tape, nylon cord, or lashings.
    - Ensure the fuel tank is not over 3/4 full. Inspect fuel tank cap, oil filler cap, and battery caps for proper installation.
    - Engage the vehicle parking brake and put the transmission in neutral.
    - Ensure the front wheels are pointed straight ahead. Tie down the steering wheel using Type III nylon cord.
    - Tape the windshield in an X formation from corner to corner.
  - **Rigging.** Rig the load according to the steps in Figure 2-38.
  - **Hookup.** The hookup team stands on the vehicle. The static wand person discharges the static electricity with the static wand. The forward hookup person places apex fitting 1 onto the forward cargo hook. The aft hookup person places apex fitting 2 onto the aft cargo hook. The hookup team then carefully dismounts the vehicle and remains close to the load as the helicopter removes slack from the sling legs. When successful hookup is assured, the hookup team quickly exits the area underneath the helicopter to the designated rendezvous point.
  - **Derigging**. Derigging is the reverse of the preparation and rigging procedures.

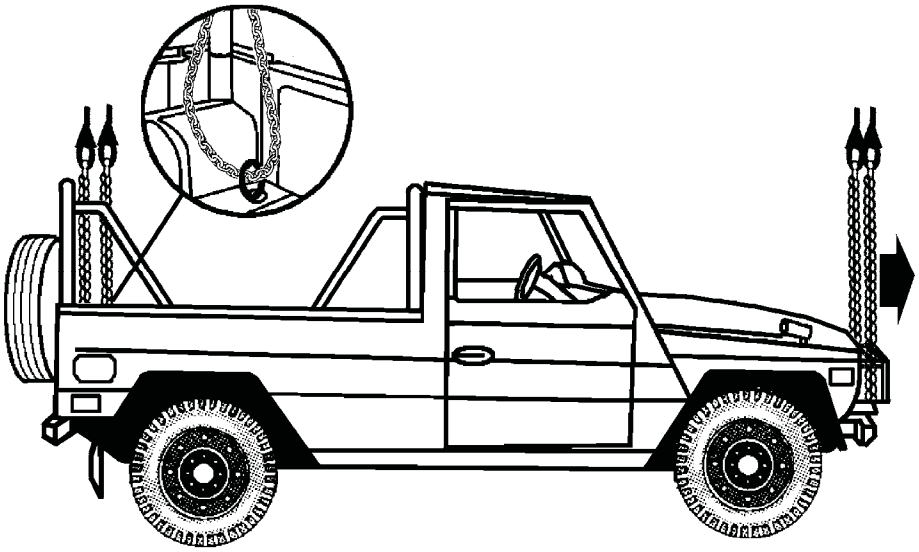

RIGGING STEPS

1. Connect 2 sling legs to web ring number 1. Position the apex fitting on the hood of the vehicle.
2. Loop the chain end of the sling legs through their respective lift provisions located on the front bumper of the vehicle. Place the correct link from Table 2-39 in the grab hook.
3. Connect 2 sling legs to web ring number 2. Position the apex fitting in the cargo bed of the vehicle.
4. Loop the chain end of the sling legs through their respective lift provision located in the rear corners of the cargo bed. Place the correct link from Table 2-39 in the grab hook.
5. Secure all excess chain with tape or Type III nylon cord.
6. Cluster and tie (breakaway technique) the sling legs in each sling set on top of the vehicle to prevent entanglement during hookup and lift-off.

Figure 2-38. Interim Fast Attack Vehicle Truck, Long Wheel Base

INTERIM FAST ATTACK VEHICLE TRUCK (IFAV), LONG WHEEL BASE, SIDE BY SIDE (SHOTGUN)

2-41. The interim fast attack vehicle truck, long wheel base side by side (shotgun) is rigged for dual-point sling load using the following procedures:

- **Applicability.** The following item in Table 2-40 is certified for the helicopter(s) listed in the following table by the US Army Natick Soldier Center:

Table 2-40. Interim Fast Attack Vehicle Truck, Long Wheel Base, Side by Side (Shotgun)

Nomenclature	*Max Weight (Pounds)*	*Sling Set*	*Link Count Front/Rear*	*Type of Aircraft*
Interim Fast Attack Vehicle Truck, Long Wheel Base, Side by Side	11,440	15K	Listed in Rigging Steps	CH-53

- **Materials.** The following materials are required to rig this load:
  - Sling set, 15,000-pound capacity (2 each).

- Tape, adhesive, pressure-sensitive, 2-inch wide roll.
- Cord, nylon, Type III, 550-pound breaking strength.
- Webbing, cotton, 1/4-inch, 80-pound breaking strength.
- Padding, cellulose.
- Strap, tiedown, cargo, CGU-1/B (3 each).

- **Personnel.** Three persons can prepare and rig this load in 15 minutes.
- **Procedures.** The following procedures apply to this load:
  - **Preparation.** Prepare the load using the following steps:
    - Fold mirrors forward in front of the windshield for added protection and tie together with Type III nylon cord. Remove all canvas covers.
    - Secure all equipment and cargo inside the vehicle with tape, nylon cord, or lashings.
    - Ensure the fuel tank is not over 3/4 full. Inspect fuel tank cap, oil filler cap, and battery caps for proper installation.
    - Engage the vehicle parking brake and put the transmission in neutral.
    - Ensure the front wheels are pointed straight ahead. Tie down the steering wheel using Type III nylon cord.
    - Tape the windshield in an X formation from corner to corner.
    - Secure the vehicle camouflage net (in the bag) to each vehicle. Attach one net to the forward roadside of the right vehicle and the other to the rear curbside of the left vehicle.
    - Position the vehicles as close together as possible and ensure the vehicles are facing in the same direction. Route a CGU-1/B cargo tiedown strap through the inboard tiedown provision located below the front bumper of each vehicle. Connect the hooks together and tighten the straps.
    - Route a CGU-1/B cargo tiedown strap through the pintles of both vehicles and connect the hooks together. Tighten the strap. Route the second CGU-1/B cargo tiedown strap around the inboard roll bars located directly behind the front seat and connect the hooks together. Tighten the straps.
  - **Rigging.** Rig the load according to the steps in Figure 2-39.
  - **Hookup.** The hookup team stands on the vehicle. The static wand person discharges the static electricity with the static wand. The forward hookup person places apex fitting 1 onto the forward cargo hook. The aft hookup person places apex fitting 2 onto the aft cargo hook. The hookup team then carefully dismounts the vehicle and remains close to the load as the helicopter removes slack from the sling legs. When successful hookup is assured, the hookup team quickly exits the area underneath the helicopter to the designated rendezvous point.
  - **Derigging.** Derigging is the reverse of the preparation and rigging procedures.

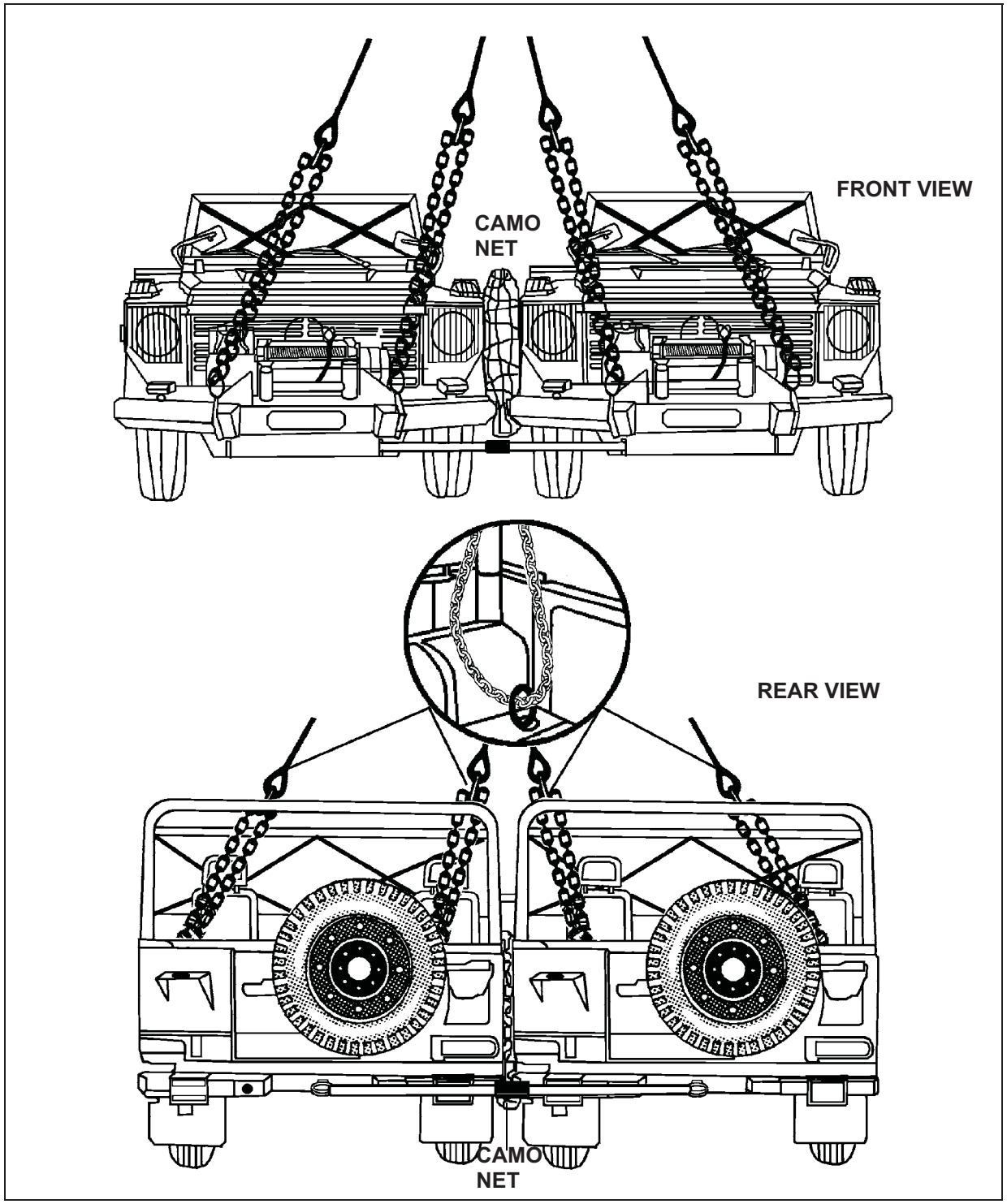

Figure 2-39. Interim Fast Attack Vehicle Truck, Long Wheel Base, Side by Side (Shotgun)

RIGGING STEPS

1. Position sling set 1 on the hood of one of the vehicles.
2. Loop the chain end of sling legs 1 and 2 through their respective outboard lift provisions located on the front of each vehicle. Place link 3 in the grab hook.
3. Loop the chain end of sling legs 3 and 4 through their respective inboard lift provisions located on the front of each vehicle. Place link 10 in the grab hook. Ensure the chains are routed through the chain guides.
4. Position sling set 2 in the bed of one of the vehicles.
5. Loop the chain end of sling legs 1 and 2 through their respective lift provision located in the outside rear corners of the cargo bed. Place link 45 in the grab hook.
6. Loop the chain end of sling legs 3 and 4 through their respective lift provision located in the inside rear corners of the cargo bed. Place link 60 in the grab hook.
7. Secure all excess chain with tape or Type III nylon cord.
8. Cluster and tie tape (breakaway technique) the sling legs in each sling set on top of the vehicle to prevent entanglement during hookup and lift-off.

Figure 2-39. Interim Fast Attack Vehicle Truck, Long Wheel Base, Side by Side (Shotgun) (Continued)

MEDIUM TACTICAL VEHICLES M1083/M1083A1/M1084/M1085/ M1086/M1090/M1090A1/M1093/M1094

2-42. The medium tactical vehicles M1083/M1083A1/M1084/M1085/M1086/M1090/M1090A1/M1093 M1094 are rigged for dual-point sling load using the following procedures:

- **Applicability**. The following items in Table 2-41 are certified for the helicopter(s) listed in the following table by the US Army Natick Soldier Center:

Table 2-41. Medium Tactical Vehicles M1083/M1083A1/M1084/M1085/M1086/M1090/ M1090A1/M1093/M1094

Nomenclature	*Max Weight (Pounds)*	*Sling Set*	*Link Count Front/Rear*	*Type of Aircraft*
Medium Tactical Vehicle, Cargo, M1083	23,200	25K	30/20	CH-47
Medium Tactical Vehicle, Cargo, M1083A1	23,200	25K	30/20	CH-47
Medium Tactical Vehicle, Cargo, M1083	28,000	40K	24/16	CH-53
Medium Tactical Vehicle, Cargo, M1083A1	28,000	40K	24/16	CH-53
Medium Tactical Vehicle, Cargo, with Material Handling Equipment, M1084	28,000	40K	19/16	CH-53
Medium Tactical Vehicle, Cargo, Longbed, M1085	28,000	40K	24/16	CH-53
Medium Tactical Vehicle, Cargo, Longbed, with Material Handling Equipment, M1086	28,000	40K	17/16	CH-53
Medium Tactical Vehicle, Dump Truck, M1090	22,100	25K	30/3	CH-47

Table 2-41. Medium Tactical Vehicles M1083/M1083A1/M1084/M1085/M1086/M1090/ M1090A1/M1093/M1094 (Continued)

Nomenclature	*Max Weight (Pounds)*	*Sling Set*	*Link Count Front/Rear*	*Type of Aircraft*
Medium Tactical Vehicle, Dump Truck, M1090A1	23,200	25K	30/3	CH-47
Medium Tactical Vehicle, Dump Truck, M1090	22,100	40K	3/10	CH-53
Medium Tactical Vehicle, Dump Truck, M1090A1	24,817	40K	3/10	CH-53
Medium Tactical Vehicle, Cargo, Airdrop Variant, M1093	23,200	25K	30/20	CH-47
Medium Tactical Vehicle, Dump Truck, Airdrop Variant, M1094	22,770	25K	30/3	CH-47

WARNING

Exceeding the recommended airspeed listed in Appendix C may result in damage to the windshields of the vehicles.

- **Materials.** The following materials are required to rig this load:
  - Sling set (25,000-pound capacity) with one additional apex fitting.
    - Additional chain length, part number 38850-00053-102, from a 25,000-pound capacity sling set (2 each).
    - Additional coupling link, part number 5779135, from a 25,000-pound capacity sling set (2 each).

    OR
  - Sling set (40,000-pound capacity) with one additional apex fitting.
    - Additional chain length, part number 607050, from a 40,000-pound capacity sling set (2 each).
    - Additional coupling link, part number 577-0815, from a 40,000-pound capacity sling set (2 each).
  - Tape, adhesive, pressure-sensitive, 2-inch wide roll.
  - Cord, nylon, Type III, 550-pound breaking strength.
  - Webbing, cotton, 1/4-inch, 80-pound breaking strength.
- **Personnel.** Two persons can prepare and rig this load in 15 minutes.
- **Procedures.** The following procedures apply to this load:
  - **Preparation.** Prepare the load using the following steps:
    - Fold the cab sides up and fasten the roof to the cab if the cab is in the stowed/airdrop position.
    - Extend the front lift provisions and the rear load spreaders and lock in place using the attached pin and safety pin.
    - Roll up the windows in the cab.
    - Tape all windows, lights, and reflectors.
    - Remove the air intake cowling by loosening the clamp and twisting off. Place the cowling on the floor board of the passenger's side.
    - Ensure the front wheels are pointed straight ahead. Tie down the steering wheel using the driver's side seat belt.
    - Fold the side view mirrors back and secure with tape or Type III nylon cord.

- Safety the cargo bed walls securing clips in the secured position with tape (only if the cargo bed walls are not stowed in the racks under the bed).
- Stow and secure the cab protector (dump trucks only).
- Stow the mud flaps by bending and hooking on the mud flap hooks.
- Engage the vehicle parking brake and put the transmission in neutral.
- Ensure the fuel tank is not over 3/4 full. Inspect fuel tank cap, oil filler cap, and battery caps for proper installation.
- Tape the filler pipes behind the cab on the driver's side to prevent the sling legs from becoming entangled.
- Secure any cargo in the bed of the vehicle.

- **Rigging.** Rig the load according to the steps in Figure 2-40.
- **Hookup.** The hookup team stands in the bed of the vehicle. The static wand person discharges the static electricity with the static wand. The forward hookup person places apex fitting 1 onto the forward cargo hook. The aft hookup person places apex fitting 2 onto the aft cargo hook. The hookup team then carefully dismounts the vehicle and remains close to the load as the helicopter removes slack from the sling legs. When successful hookup is assured, the hookup team quickly exits the area underneath the helicopter to the designated rendezvous point.
- **Derigging.** Derigging is the reverse of the preparation and rigging procedures.

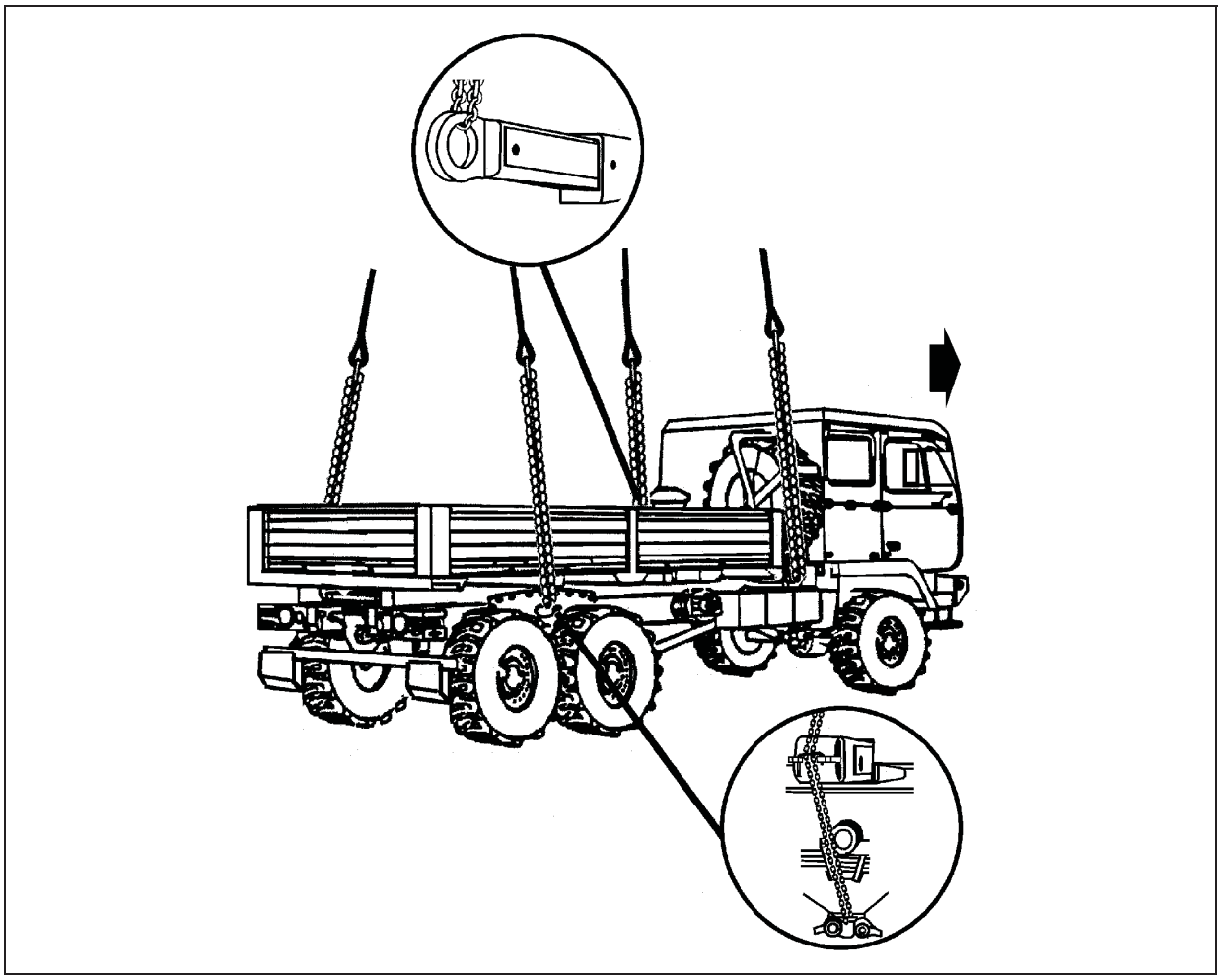

Figure 2-40. Medium Tactical Vehicles

RIGGING STEPS
1. Connect 2 sling legs to apex fitting number 1. Position the apex fitting on the forward end of the bed. 2. Loop the chain end of the sling legs through their respective lift provisions located behind the vehicle cab. Place the correct link from Table 2-41 in the grab hook and secure all excess chain with tape or Type III nylon cord. 3. Cluster and tie (breakaway technique) the sling legs on top of the spare tire to prevent entanglement during hookup and lift-off. 4. Connect 2 sling legs to apex fitting number 2. Attach one extra chain length to each existing chain on each sling leg using one coupling link. Position the apex fitting on the rear of the cargo bed. 5. Route the left and right chains through their respective rear load spreader and loop the chain end of the sling legs through their respective lift ring located on the chassis between the tires. Route the chains back through the rear load spreaders and place the correct link from Table 2-41 in the grab hook. Secure all excess chain with tape or Type III nylon cord. 6. Cluster and tie (breakaway technique) the sling legs together to prevent entanglement during hookup and lift-off.

Figure 2-40. Medium Tactical Vehicles (Continued)

LIGHT MEDIUM TACTICAL VEHICLES (LMTV) M1078/M1078A1/ M1079A1/M1081

2-43. The light medium tactical vehicles M1078/M1078A1/M1079A1/M1081 are rigged for dual-point sling load using the following procedures:

- **Applicability.** The following items in Table 2-42 are certified for the helicopter(s) listed in the following table by the US Army Natick Soldier Center:

Table 2-42. Light Medium Tactical Vehicles M1078/M1078A1/M1079A1/M1081

Nomenclature	*Max Weight (Pounds)*	*Sling Set*	*Link Count Front/Rear*	*Type of Aircraft*
Light Medium Tactical Vehicle, Cargo, M1078	23,200	25K	30/20	CH-47
Light Medium Tactical Vehicle, Cargo, M1078A1	23,200	25K	30/20	CH-47
Light Medium Tactical Vehicle, Shop Van, M1079A1	23,200	25K	30/20	CH-47
Light Medium Tactical Vehicle, Cargo, M1081	23,200	25K	30/20	CH-47

WARNING

Exceeding the recommended airspeed listed in Appendix C may result in damage to the windshields of the vehicles.

- **Materials.** The following materials are required to rig this load:
  - Sling set (25,000-pound capacity) with one additional apex fitting.
    - Additional chain length, part number 38850-00053-102, from a 25,000-pound capacity sling set (6 each).
    - Additional coupling link, part number 5779135, from a 25,000-pound sling set (6 each).
    - Tape, adhesive, pressure-sensitive, 2-inch wide roll.
    - Cord, nylon, Type III, 550-pound breaking strength.
    - Webbing, cotton, 1/4-inch, 80-pound breaking strength.
- **Personnel.** Two persons can prepare and rig this load in 15 minutes.
- **Procedures.** The following procedures apply to this load:
  - **Preparation.** Prepare the load using the following steps:
    - Fold the cab sides up and fasten the roof to the cab if the cab is in the stowed/airdrop position (airdrop variant only).
    - Extend the front lift provisions and the rear load spreaders and lock in place using the attached pin and safety pin.
    - Roll up the windows in the cab.
    - Tape all windows, lights, and reflectors.
    - Remove the air intake cowling by loosening the clamp and twisting off. Place the cowling on the floor board of the passenger's side.
    - Ensure the front wheels are pointed straight ahead. Tie down the steering wheel using the driver's side seat belt.
    - Fold the side view mirrors back and secure with tape or Type III nylon cord.
    - Safety the cargo bed walls securing clips in the secured position with tape (only if the cargo bed walls are not stowed in the racks under the bed).
    - Stow the mud flaps by bending and hooking on the mud flap hooks.
    - Engage the vehicle parking brake and put the transmission in neutral.
    - Ensure the fuel tank is not over 3/4 full. Inspect fuel tank cap, oil filler cap, and battery caps for proper installation.
    - Tape the filler pipes behind the cab on the driver's side to prevent the sling legs from becoming entangled.
    - Secure any cargo in the bed of the vehicle.
  - **Rigging.** Rig the load according to the steps in Figure 2-41.
  - **Hookup.** The hookup team stands in the bed of the vehicle. The static wand person discharges the static electricity with the static wand. The forward hookup person places apex fitting 1 onto the forward cargo hook. The aft hookup person places apex fitting 2 onto the aft cargo hook. The hookup team then carefully dismounts the vehicle and remains close to the load as the helicopter removes slack from the sling legs. When successful hookup is assured, the hookup team quickly exits the area underneath the helicopter to the designated rendezvous point.
  - **Derigging.** Derigging is the reverse of the preparation and rigging procedures.

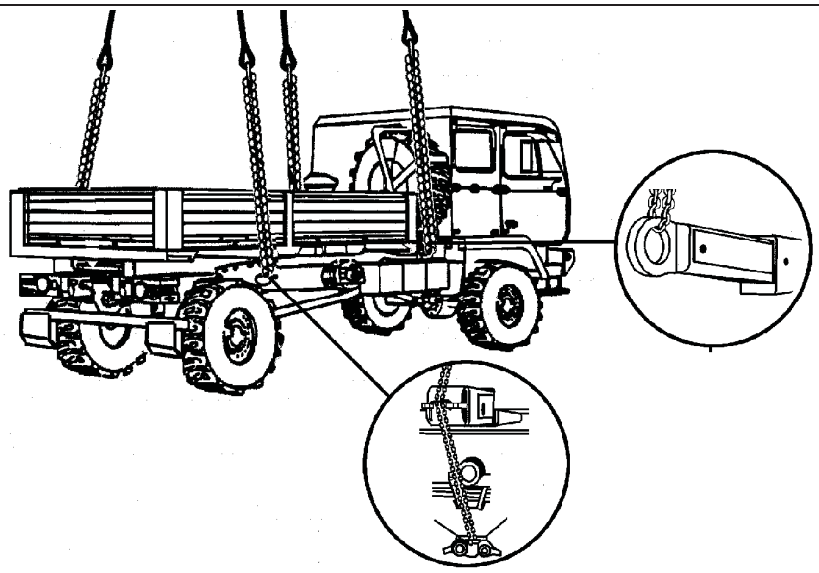

RIGGING STEPS

1. Connect 2 sling legs to apex fitting number 1. Attach one extra chain length to each existing chain on each sling leg using one coupling link. Position the apex fitting on the forward end of the bed.

2. Loop the chain end of the sling legs through their respective lift provisions located behind the vehicle cab. Place the correct link from Table 2-42 in the grab hook and secure all excess chain with tape or Type III nylon cord.

3. Cluster and (breakaway technique) the sling legs on top of the spare tire to prevent entanglement during hookup and lift-off.

4. Connect 2 sling legs to apex fitting number 2. Attach two extra chain lengths to each existing chain on each sling leg using one coupling link for each additional chain length added. Position the apex fitting on the rear of the cargo bed.

5. Route the left and right chains through their respective rear load spreader and loop the chain end of the sling legs through their respective lift ring, located on the chassis near the rear axle. Route the chains back through the rear load spreaders and place the correct link from Table 2-42 in the grab hook. Secure all excess chain with tape or Type III nylon cord.

6. Cluster and tie (breakaway technique) the sling legs together to prevent entanglement during hookup and lift-off.

Figure 2-41. Light Medium Tactical Vehicles

LIGHT MEDIUM TACTICAL VEHICLES (LMTV) M1078/M1078A1/ M1081 WITH TYPE III CARGO BED COVER AND MEDIUM TACTICAL VEHICLES (MTV) M1083/M1083A1/M1093 WITH TYPE IV CARGO BED COVER

2-44. The light medium tactical vehicles M1078/M1078A1/M1081 with type III cargo bed cover and medium tactical vehicles M1083/M1083A1/M1093 with type IV cargo bed cover are rigged for dual-point sling load using the following procedures:

- **Applicability.** The following items in Table 2-43 are certified for the helicopter(s) listed in the following table by the US Army Natick Soldier Center:

Table 2-43. LMTVs and MTVs with Cargo Bed Covers

Nomenclature	*Max Weight (Pounds)*	*Sling Set*	*Link Count Front/Rear*	*Type of Aircraft*
Type III Cargo Bed Cover (deployed or stowed) on Light Medium Tactical Vehicle, Cargo, M1078/M1078A1/M1081	23,200	25K	25/3	CH-47
30/20Type IV Cargo Bed Cover (deployed or stowed) on Medium Tactical Vehicle, Cargo, M1083/M1083A1/M1093	23,200	25K	20/3	CH-47

WARNING

Exceeding the recommended airspeed listed in Appendix C may result in damage to the windshields of the vehicles.

Note: Certified cargo bed cover NSNs are:
Type III Camouflage: 5411-01-472-7852
Type III Sand: 5411-01-479-1932
Type IV Camouflage: 5411-01-472-7857
Type IV Sand: 5411-01-479-1933

- **Materials.** The following materials are required to rig this load:
  - Sling set (25,000-pound capacity) with one additional apex fitting.
    - Additional chain length, part number 38850-00053-102, from a 25,000-pound capacity sling set (6 each).
    - Additional coupling link, part number 5779135, from a 25,000-pound capacity sling set (6 each).
  - Tape, adhesive, pressure-sensitive, 2-inch wide roll.
  - Cord, nylon, Type III, 550-pound breaking strength.
  - Webbing, cotton, 1/4-inch, 80-pound breaking strength.
- **Personnel.** Two persons can prepare and rig this load in 15 minutes.
- **Procedures.** The following procedures apply to this load:
  - **Preparation.** Prepare the load using the following steps:
    - Fold the cab sides up and fasten the roof to the cab if the cab is in the stowed/airdrop position (airdrop variant only).
    - Extend the front lift provisions and the rear load spreaders and lock in place using the attached pin and safety pin.
    - Roll up the windows in the cab.
    - Tape all windows, lights, and reflectors.
    - Remove the air intake cowling by loosening the clamp and twisting off. Place the cowling on the floor board of the passenger's side.
    - Ensure the front wheels are pointed straight ahead. Tie down the steering wheel using the driver's side seat belt.
    - Fold the side view mirrors back and secure with tape or Type III nylon cord.
    - Safety the cargo bed walls securing clips in the secured position with tape (only if the cargo bed walls are not stowed in the racks under the bed).
    - Stow the mud flaps by bending and hooking on the mud flap hooks.
    - Engage the vehicle parking brake and put the transmission in neutral.
    - Ensure the fuel tank is not over 3/4 full. Inspect fuel tank cap, oil filler cap, and battery caps for proper installation.
    - Tape the filler pipes behind the cab on the driver's side to prevent the sling legs from becoming entangled.
    - Secure any cargo that is stowed in the cargo bed cover with lashings, Type III nylon cord, or tape.

- **Rigging.** Rig the load according to the steps in Figure 2-42.

***Note*:** Figure 2-42 shows an MTV. The LMTVs only have one rear axle.

- **Hookup.** The hookup team stands on the cargo bed cover. The static wand person discharges the static electricity with the static wand. The forward hookup person places apex fitting 1 onto the forward cargo hook. The aft hookup person places apex fitting 2 onto the aft cargo hook. The hookup team then carefully dismounts the vehicle and remains close to the load as the helicopter removes slack from the sling legs. When successful hookup is assured, the hookup team quickly exits the area underneath the helicopter to the designated rendezvous point.
- **Derigging.** Derigging is the reverse of the preparation and rigging procedures.

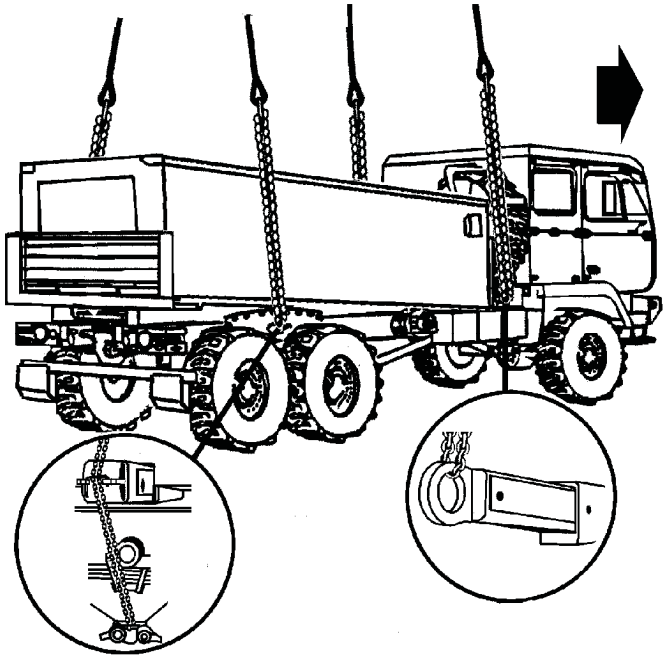

Figure 2-42. LMTVs and MTVs with Cargo Bed Covers

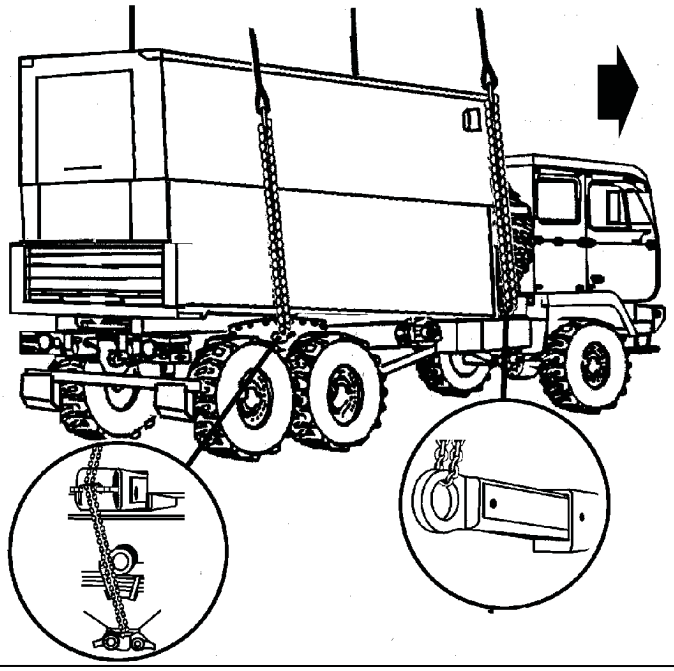

RIGGING STEPS

1. Connect 2 sling legs to apex fitting number 1. Attach one extra chain length to each existing chain on each sling leg using one coupling link. Position the apex fitting on the forward end of the cargo bed cover.

2. Loop the chain end of the sling legs through their respective lift provisions located behind the vehicle cab. Place the correct link from Table 2-43 in the grab hook and secure all excess chain with tape or Type III nylon cord.

3. Cluster and tie (breakaway technique) the sling legs on top of the spare tire to prevent entanglement during hookup and lift-off.

4. Connect 2 sling legs to apex fitting number 2. Attach two extra chain lengths to each existing chain on each sling leg using one coupling link for each additional chain length added. Position the apex fitting on the rear of the cargo bed cover.

5. Route the left and right chains through their respective rear load spreader and loop the chain end of the sling legs through their respective lift ring, located on the chassis near the rear axle. Route the chains back through the rear load spreaders and place the correct link from Table 2-43 in the grab hook. Secure all excess chain with tape or Type III nylon cord. Close the safety gate on each of the rear load spreaders.

6. Cluster and tie (breakaway technique) the sling legs together to prevent entanglement during hookup and lift-off.

Figure 2-42. LMTVs and MTVs with Cargo Bed Covers (Continued)

MEDIUM TACTICAL VEHICLE, TRACTOR, M1088/M1088A1

2-45. The medium tactical vehicle, tractors, M1088/M1088A1 are rigged for dual-point sling load using the following procedures:

- **Applicability.** The following item in Table 2-44 is certified for the helicopter(s) listed in the following table by the US Army Natick Soldier Center:

Table 2-44. Medium Tactical Vehicle, Tractor, M1088/M1088A1

Nomenclature	*Max Weight (Pounds)*	*Sling Set*	*Link Count Front/Rear*	*Type of Aircraft*
Medium Tactical Vehicle, Tractor, M1088/M1088A1	19,740	25K 40K	40/3 3/20	CH-47 CH-53

WARNING

Exceeding the recommended airspeed listed in Appendix C may result in damage to the windshields of the vehicles.

- **Materials.** The following materials are required to rig this load:
  - Sling set (25,000-pound capacity) with one additional apex fitting.
    - Additional chain length, part number 38850-00053-102, from a 25,000-pound capacity sling set (2 each).
    - Additional coupling link, part number 9779135, from a 25,000-pound capacity sling set (2 each).

    OR
  - Sling set (40,000-pound capacity) with one additional apex fitting.
  - Tape, adhesive, pressure-sensitive, 2-inch wide roll.
  - Cord, nylon, Type III, 550-pound breaking strength.
  - Webbing, cotton, 1/4-inch, 80-pound breaking strength.
- **Personnel.** Two persons can prepare and rig this load in 15 minutes.
- **Procedures.** The following procedures apply to this load:
  - **Preparation.** Prepare the load using the following steps:
    - Extend the front lift provisions and lock in place using the attached pin and safety pin.
    - Roll up the windows in the cab.
    - Tape all windows, lights, and reflectors.
    - Remove the air intake cowling by loosening the clamp and twisting off. Place the cowling on the floor board of the passenger's side.
    - Ensure the front wheels are pointed straight ahead. Tie down the steering wheel using the driver's side seat belt.
    - Fold the side view mirrors back and secure with tape or Type III nylon cord.
    - Stow the mud flaps by bending and hooking on the mud flap hooks.
    - Engage the vehicle parking brake and put the transmission in neutral.
    - Ensure the fuel tank is not over 3/4 full. Inspect fuel tank cap, oil filler cap, and battery caps for proper installation.
    - Tape the filler pipes behind the cab on the driver's side to prevent the sling legs from becoming entangled.
  - **Rigging.** Rig the load according to the steps in Figure 2-43.

- **Hookup.** The hookup team stands on the rear of the vehicle. The static wand person discharges the static electricity with the static wand. The forward hookup person places apex fitting 1 onto the forward cargo hook. The aft hookup person places apex fitting 2 onto the aft cargo hook. The hookup team then carefully dismounts the vehicle and remains close to the load as the helicopter removes slack from the sling legs. When successful hookup is assured, the hookup team quickly exits the area underneath the helicopter to the designated rendezvous point.
- **Derigging.** Derigging is the reverse of the preparation and rigging procedures.

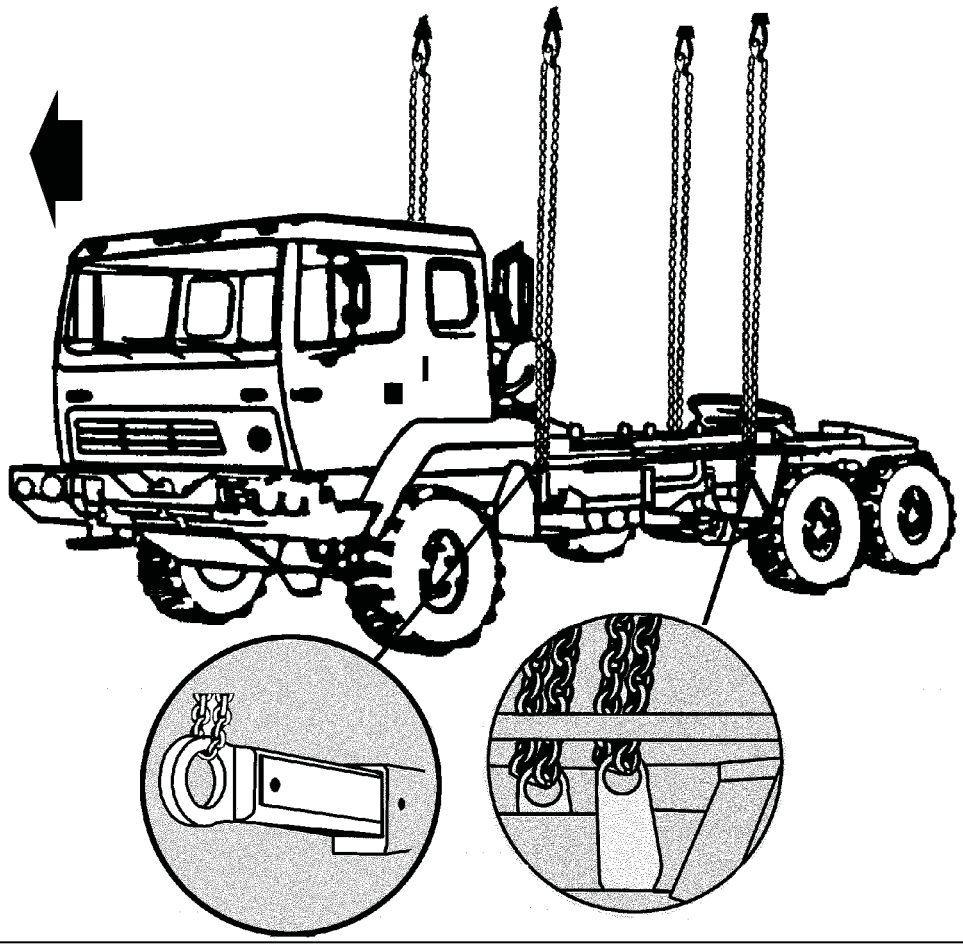

RIGGING STEPS

1. Connect 2 sling legs to apex fitting number 1. Attach one extra chain length to each existing chain on each sling leg using one coupling link (for 25,000-pound capacity sling sets only). Position the apex fitting on the forward end of the bed.

2. Loop the chain end of the sling legs through their respective lift provisions located behind the vehicle cab. Place the correct link from Table 2-44 in the grab hook and secure all excess chain with tape or Type III nylon cord.

3. Cluster and tie or tape (breakaway technique) the sling legs on top of the spare tire to prevent entanglement during hookup and lift-off.

Figure 2-43. Medium Tactical Vehicle, Tractor, M1088/M1088A1

RIGGING STEPS (CONTINUED)
4. Connect 2 sling legs to apex fitting number 2. Position the apex fitting on the rear of the cargo deck. 5. Loop the chain end of the sling legs through their respective lift ring, located forward of the 5th wheel. Place the correct link from Table 2-44 in the grab hook. Secure all excess chain with tape or Type III nylon cord. 6. Cluster and tie (breakaway technique) the sling legs together to prevent entanglement during hookup and lift-off.

Figure 2-43. Medium Tactical Vehicle, Tractor, M1088/M1088A1 (Continued)

TRUCK, CARGO, 5-TON, M813A1/M923/M925

2-46. The trucks, cargo, 5-ton, M813A1/M923/M925 are rigged for dual-point sling load using the following procedures:

- **Applicability.** The following items in Table 2-45 are certified for the helicopter(s) listed in the following table by the US Army Natick Soldier Center:

Table 2-45. Truck, Cargo, 5-ton, M813A1/M923/M925

Nomenclature	*Max Weight (Pounds)*	*Sling Set*	*Link Count Front/Rear*	*Type of Aircraft*
Truck, Cargo, 5-Ton, w/wo Winch, M813A1	21,120	40K	3/55	CH-53
Truck, Cargo, 5-Ton, wo Winch, M923	22,175	40K	3/55	CH-53
Truck, Cargo, 5-Ton, with Winch, M925	23,275	40K	3/55	CH-53

- **Materials.** The following materials are required to rig this load:
  - Sling set (40,000-pound capacity) with one additional apex fitting.
  - Tape, adhesive, pressure-sensitive, 2-inch wide roll.
  - Cord, nylon, Type III, 550-pound breaking strength.
  - Webbing, cotton, 1/4-inch, 80-pound breaking strength.
- **Personnel.** Two persons can prepare and rig this load in 15 minutes.
- **Procedures.** The following procedures apply to this load:
  - **Preparation.** Prepare the load using the following steps:
    - Remove cab top and rear canvas. Fold and secure to the truck.
    - Roll down the front cab windows.
    - Remove side racks/seats and secure to the truck.
    - Secure all loose equipment inside the truck with tape, lashings, or Type III nylon cord.
    - Ensure the fuel tank is not over 3/4 full. Inspect fuel tank cap, oil filler cap, and battery caps for proper installation.
    - Engage the parking brake and place the transmission in neutral.
    - Ensure the front wheels are pointed straight ahead. Tie down the steering wheel using Type III nylon cord.
    - Extend the front lift provisions located aft of the front tires. Insert the bolts in the holes, fasten nuts, and install locking pins
  - **Rigging.** Rig the load according to the steps in Figure 2-44.

- **Hookup.** The hookup team stands in the bed of the truck. The static wand person discharges the static electricity with the static wand. The forward hookup person places apex fitting 1 onto the forward cargo hook. The aft hookup person places apex fitting 2 onto the aft cargo hook. The hookup team then carefully dismounts the vehicle and remains close to the load as the helicopter removes slack from the sling legs. When successful hookup is assured, the hookup team quickly exits the area underneath the helicopter to the designated rendezvous point.
- **Derigging.** Derigging is the reverse of the preparation and rigging procedures.

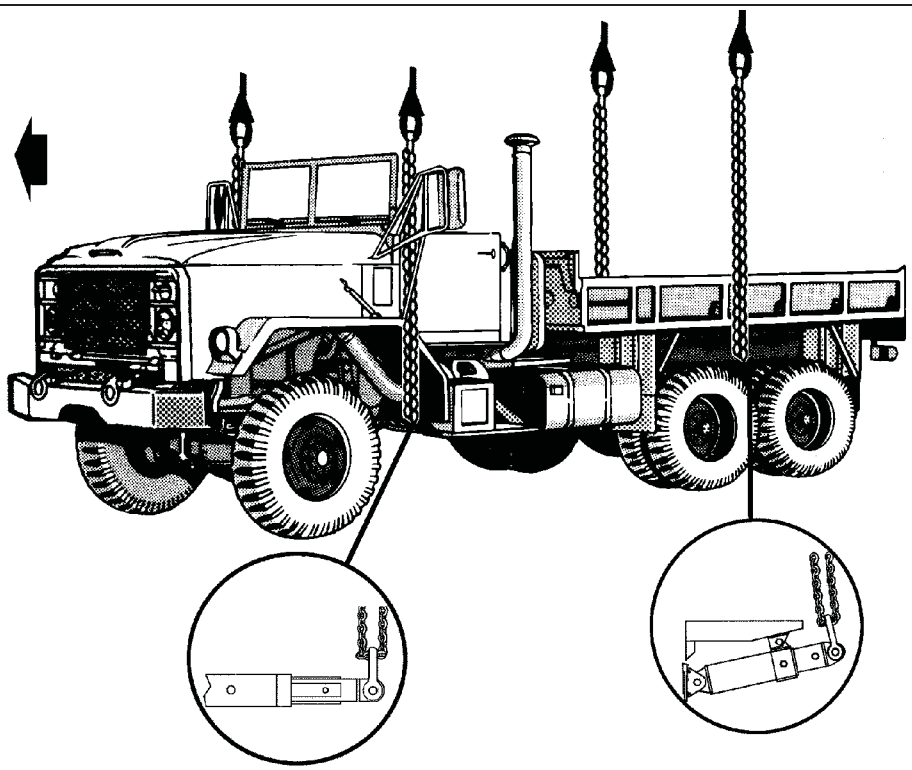

RIGGING STEPS

1. Connect 2 sling legs to apex fitting number 1. Position the apex fitting in the bed of the vehicle.

2. Loop the chain end of the sling legs through their respective lift provisions aft of the front wheels. Route the sling legs to the rear of the mirrors. Place the correct link from Table 2-45 in the grab hook.

3. Connect 2 sling legs to apex fitting number 2. Position the apex fitting in the bed of the vehicle.

4. Loop the chain end of the sling legs through their respective lift provisions located between the rear wheels. Place the correct link from Table 2-45 in the grab hook. Secure all excess chain with tape or Type III nylon cord.

5. Cluster and tie (breakaway technique) the sling legs in each sling set on top of the vehicle to prevent entanglement during hookup and lift-off.

Figure 2-44. Truck, Cargo, 5-ton, M813A1/M923/M925

TRUCK, CARGO, 2 1/2-TON, M35A2 MODIFIED, PART OF AN AN/MPQ-49A FORWARD AREA ALERTING RADAR (FAAR) SYSTEM

2-47. The truck, cargo, 2 1/2-ton, M35A2 modified, part of an AN/MPQ-49A forward area alerting radar system is rigged for dual-point sling load using the following procedures:

- **Applicability**. The following item in Table 2-46 is certified for the helicopter(s) listed in the following table by the US Army Natick Soldier Center:

Table 2-46. Truck, Cargo, 2 1/2-Ton, M35A2 Modified

Nomenclature	*Max Weight (Pounds)*	*Sling Set*	*Link Count Front/Rear*	*Type of Aircraft*
Truck, 2 1/2-Ton, Modified, M35A2	10,900	25K	3/3	CH-47

- **Materials.** The following materials are required to rig this load:
  - Sling set (25,000-pound capacity) with one additional apex fitting.
  - Tape, adhesive, pressure-sensitive, 2-inch wide roll.
  - Cord, nylon, Type III, 550-pound breaking strength.
  - Webbing, cotton, 1/4-inch, 80-pound breaking strength.
  - Tie-down strap, cargo, CGU-1/B (as required).
- **Personnel.** Two persons can prepare and rig this load in 15 minutes.
- **Procedures.** The following procedures apply to this load:
  - **Preparation.** Prepare the load using the following steps:
    - Remove the upper portion of the exhaust stack and secure it in the cab.
    - Remove the cab's canvas top, lower the windshield, fold the canvas top over the windshield and secure with Type III nylon cord.
    - Secure the windshield in the down position with CGU-1/B.
    - Safety the hood closed with Type III nylon cord around the hood latch brackets and grill.
    - Ensure the fuel tank is not over 3/4 full. Inspect fuel tank cap, oil filler cap, and battery caps for proper installation. Ensure the battery compartment door is fastened closed.
    - Tie down the seats and secure the doors with Type III nylon cord.
    - Engage the parking brake and place the transmission in neutral.
    - Ensure the front wheels are pointed straight ahead. Tie down the steering wheel using Type III nylon cord.
  - **Rigging.** Rig the load according to the steps in Figure 2-45.
  - **Hookup.** The static wand person discharges the static electricity with the static wand. The forward hookup person stands on the passenger's seat and places apex fitting 1 onto the forward cargo hook. The aft hookup person stands on the chassis and places apex fitting 2 onto the aft cargo hook. The hookup team then carefully dismounts the vehicle and remains close to the load as the helicopter removes slack from the sling legs. When successful hookup is assured, the hookup team quickly exits the area underneath the helicopter to the designated rendezvous point.
  - **Derigging**. Derigging is the reverse of the preparation and rigging procedures.

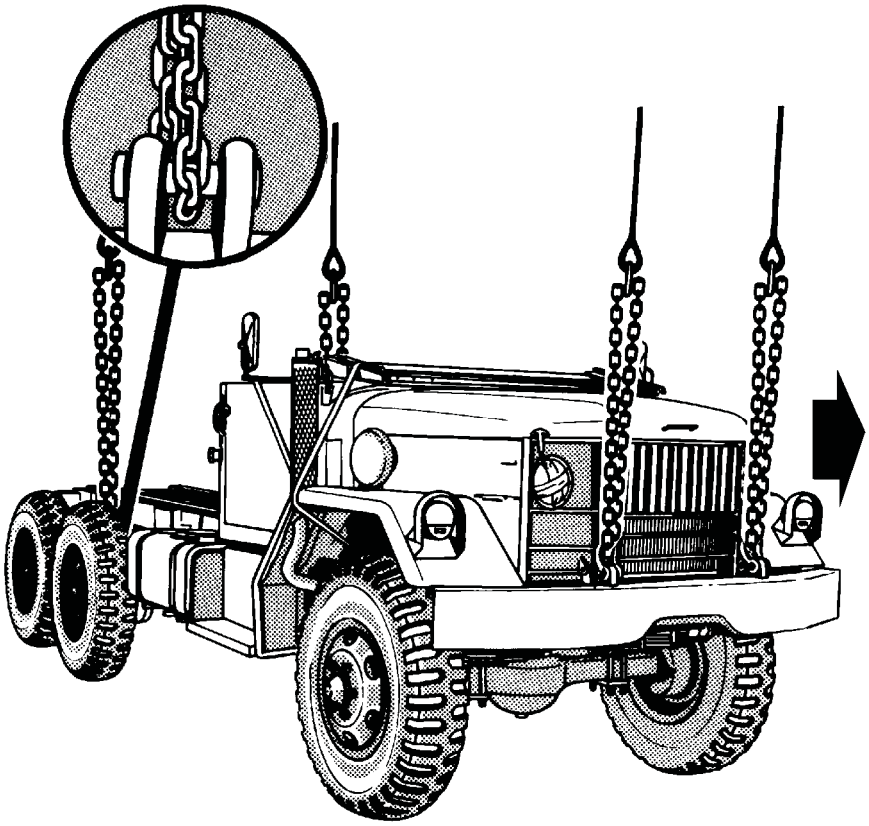

RIGGING STEPS

1. Connect 2 sling legs to apex fitting number 1. Position the apex fitting on the hood of the vehicle.

2. Loop the chain end of the sling legs through their respective lift provisions on the front bumper. Place the correct link from Table 2-46 in the grab hook.

3. Connect 2 sling legs to apex fitting number 2. Position the apex fitting on the chassis of the vehicle.

4. Loop the chain end of the sling legs through their respective lift provision located on top of the spring housing between the rear wheels. Place the correct link from Table 2-46 in the grab hook.

5. Secure all excess chain with tape or Type III nylon cord.

6. Cluster and tie (breakaway technique) the sling legs in each sling set on top of the vehicle to prevent entanglement during hookup and lift-off.

Figure 2-45. Truck, Cargo, 2 1/2-ton, M35A2 Modified

M35A3 2 1/2-TON CARGO TRUCK

2-48. The M35A3 2 1/2-ton cargo truck is rigged for dual-point sling load using the following procedures:

- **Applicability.** The following item in Table 2-47 is certified for the helicopter(s) listed in the following table by the US Army Natick Soldier Center:

Table 2-47. M35A3 2 1/2-Ton Cargo Truck

Nomenclature	*Max Weight (Pounds)*	*Sling Set*	*Link Count Front/Rear*	*Type of Aircraft*
Truck, 2 1/2-Ton, M35A2	18,900	25K	3/50	CH-47

- **Materials.** The following materials are required to rig this load:
  - Sling set (25,000-pound capacity) with one additional apex fitting.
    - Additional chain length, part number 38850-00053-102, from a 25,000-pound capacity sling set (4 each).
    - Additional coupling link, part number 5779135, from a 25,000-pound capacity sling set (4 each).
  - Tape, adhesive, pressure-sensitive, 2-inch wide roll.
  - Cord, nylon, Type III, 550-pound breaking strength.
  - Webbing, cotton, 1/4-inch, 80-pound breaking strength.
  - Felt sheet, cattle hair, Type IV, 1/2-inch or suitable padding.
  - Strap, cargo, tiedown, CGU-1/B (as required).
- **Personnel.** Two persons can prepare and rig this load in 15 minutes.
- **Procedures.** The following procedures apply to this load:
  - **Preparation.** Prepare the load using the following steps:
    - Remove the cargo compartment canvas and bows. Secure the canvas and bows in the bed of the truck.
    - Remove the cab top canvas, lower the windshield, fold the canvas over the windshield, and secure with Type III nylon cord.
    - Secure the windshield in the down position with the CGU-1/B cargo tiedown strap.
    - Safety tie the hood closed with Type III nylon cord around the hood latch and the grill.
    - Ensure the fuel, oil filler, radiator, and battery caps are properly installed and secured. Ensure the battery compartment door is closed. Ensure the fuel tank is less than 3/4 full.
    - Secure the seat cushions and doors with Type III nylon cord.
    - Engage the emergency brake and place the transmission in neutral.
    - Straighten the front wheels and secure the steering wheel with Type III nylon cord.
    - Ensure the front lift provisions are in the transport position.
    - Extend the sling leg chains by connecting one additional chain length to each chain on a 25,000-pound capacity sling set with coupling links.
  - **Rigging.** Rig the load according to the steps in Figure 2-46.

***Note*:** This vehicle flies aft end forward.

  - **Hookup.** Two hookup teams are used for this load. The static discharge person discharges the static electricity. The forward hookup person stands in the truck bed and places apex fitting 1 onto the forward cargo hook. The aft hookup person stands on the passenger seat and places apex fitting 2 onto the aft cargo hook. The hookup teams then carefully dismount the load and

remain close to the load as the helicopter removes slack from the sling legs. When successful hookup is assured, the hookup teams quickly exit the area underneath the helicopter to the designated rendezvous point.

- **Derigging.** Derigging is the reverse of the preparation and rigging procedures.

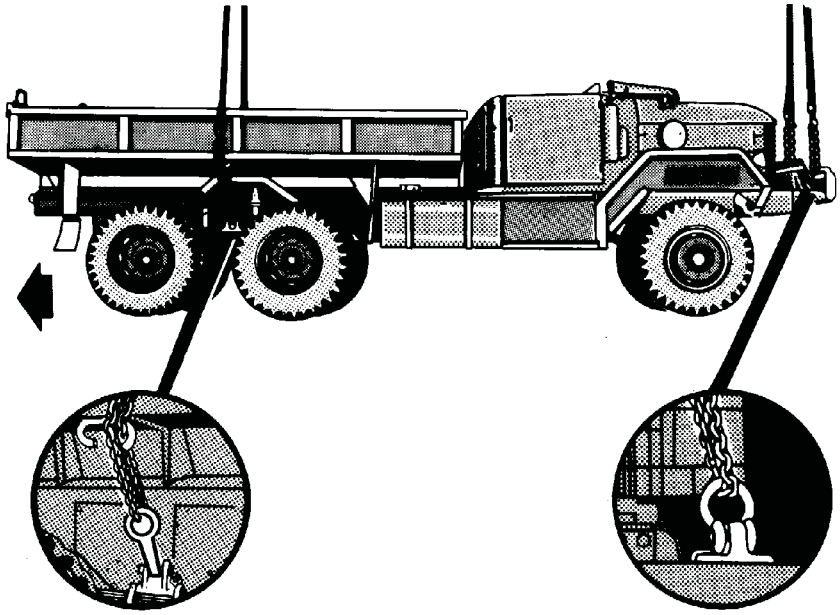

RIGGING STEPS

1. Place two sling legs on apex fitting number 1. Position apex fitting number 1 in the bed of the truck.

2. Loop the chain end of the left and right sling legs through their respective extended lift provision located between the rear wheels. Place the correct link from Table 2-47 in the grab hook.

3. Pull each grab hook up against the side of the truck and tie the chain in the chain guide bracket. Pull both grab hooks together over top of the bed and tie together with 1/4-inch cotton webbing.

4. Place two sling legs on apex fitting number 2. Position apex fitting number 2 on the hood.

5. Loop the chain end of the left and right sling legs through their respective lift provision located on the front bumper. Place the correct link from Table 2-47 in the grab hook. Secure the excess chain with tape or Type III nylon cord.

6. Raise the apex fittings above the load. Cluster and tie (breakaway technique) the sling legs in each sling set together to prevent entanglement during hookup and lift-off.

Figure 2-46. M35A3 2 1/2-Ton Cargo Truck

MEDIUM TACTICAL VEHICLE REPLACEMENT (MTVR) (USMC)

2-49. The medium tactical vehicle replacement is rigged for dual-point sling load using the following procedures:

- **Applicability**. The following item in Table 2-48 is certified for the helicopter(s) listed in the following table by the US Army Natick Soldier Center:

Table 2-48. Medium Tactical Vehicle Replacement

Nomenclature	*Max Weight (Pounds)*	*Sling Set*	*Link Count Front/Rear*	*Type of Aircraft*
Medium Tactical Vehicle Replacement	27,800	40K	30/10	CH-53

- **Materials.** The following materials are required to rig this load:
  - Sling set (40,000-pound capacity) with one additional apex fitting.
    - Additional chain length, from a 40,000-pound capacity sling set (2 each).
    - Additional coupling link, from a 40,000-pound capacity sling set (2 each).
  - Tape, adhesive, pressure-sensitive, 2-inch wide roll.
  - Cord, nylon, Type III, 550-pound breaking strength.
  - Webbing, cotton, 1/4-inch, 80-pound breaking strength.
  - Padding, cellulose.
- **Personnel.** Four persons can prepare and rig this load in 20 minutes.
- **Procedures.** The following procedures apply to this load:
  - **Preparation.** Prepare the load using the following steps:
    - Fold mirrors forward/inward and tie together with Type III nylon cord.
    - Secure all equipment and cargo inside the vehicle with tape, nylon cord, or hold down straps.
    - Ensure the fuel tank is not over 3/4 full. Place the fuel tank cap in the vent position. Inspect the oil filler cap and battery caps for proper installation.
    - Engage the vehicle parking brake and put the transmission in neutral.
    - Ensure the front wheels are pointed straight ahead. Tie down the steering wheel using Type III nylon cord.
    - Remove the upper sections of the exhaust stack and the breather and secure in the vehicle.
    - Remove and secure the sideboards, tarp, and bows.
  - **Rigging.** Rig the load according to the steps in Figure 2-47.
  - **Hookup.** The hookup team stands in the bed of the vehicle. The static wand person discharges the static electricity with the static wand. The forward hookup person places apex fitting 1 onto the forward cargo hook. The aft hookup person places apex fitting 2 onto the aft cargo hook. The hookup team then carefully dismounts the vehicle and remains close to the load as the helicopter removes slack from the sling legs. When successful hookup is assured, the hookup team quickly exits the area underneath the helicopter to the designated rendezvous point.
  - **Derigging.** Derigging is the reverse of the preparation and rigging procedures.

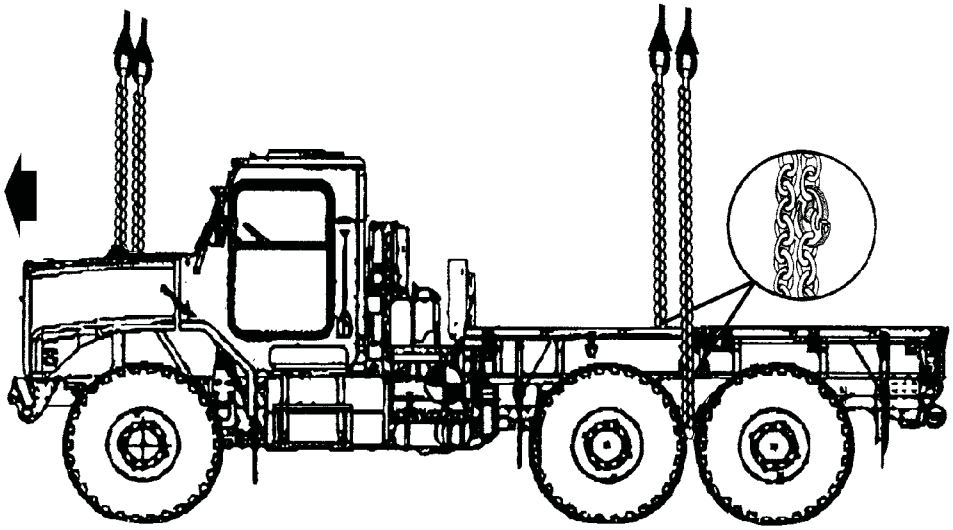

RIGGING STEPS

1. Connect 2 sling legs to apex fitting number 1. Position the apex fitting on top of the roof.

2. Loop the chain end of the sling legs through their respective lift provisions that protrudes through the hood. Place the correct link from Table 2-48 in the grab hook. Secure all excess chain with tape or Type III nylon cord.

3. Connect 2 sling legs to apex fitting number 2. Position the apex fitting on bed of the truck.

4. Route the chain end of sling leg 3 through the left sling guide located near the center of the truck bed. Loop the chain around the left lift provision located between the rear axles. Add an additional chain length to the chain with a coupling link and route the chain end back through the sling guide. Place the correct links from Table 2-48 in the grab hooks. Repeat with sling leg 4 and right sling guide and right lift provision. Secure all excess chain with tape or Type III nylon cord.

5. Cluster and tie (breakaway technique) the sling legs in each sling set on top of the vehicle to prevent entanglement during hookup and lift-off.

Figure 2-47. Medium Tactical Vehicle Replacement

CAUTION

Attach the sling leg chain extensions to the rear legs after passing the sling leg chain through the rear lift provisions.

FRONT POWER UNIT, MK48

2-50. The front power unit, MK48 is rigged for dual-point sling load using the following procedures:

- **Applicability.** The following item in Table 2-49 is certified for the helicopter(s) listed in the following table by the US Army Natick Soldier Center:

Table 2-49. Front Power Unit, MK49

Nomenclature	*Max Weight (Pounds)*	*Sling Set*	*Link Count Front/Rear*	*Type of Aircraft*
Front Power Unit, MK48	26,000	40K	Listed in Rigging Steps	CH-53

- **Materials.** The following materials are required to rig this load:
  - Sling set (40,000-pound capacity) with one additional apex fitting.
    - Additional chain length, part number 607050, from a 40,000-pound capacity sling set (2 each).
    - Additional coupling link, part number 577-0815, from a 40,000-pound capacity sling set (2 each).
  - Tape, adhesive, pressure-sensitive, 2-inch wide roll.
  - Cord, nylon, Type III, 550-pound breaking strength.
  - Webbing, cotton, 1/4-inch, 80-pound breaking strength.
- **Personnel.** Two persons can prepare and rig this load in 20 minutes.
- **Procedures.** The following procedures apply to this load:
  - **Preparation.** Prepare the load using the following steps:
    - Ensure the front wheels are pointed straight ahead. Tie down the steering wheel using Type III nylon cord.
    - Engage the parking brake and place the transmission in neutral.
    - Ensure the fuel tank is not over 3/4 full. Inspect fuel tank cap, oil filler cap, and battery caps for proper installation. Ensure the battery compartment door is fastened closed.
    - Open the vent on top of the cab. Secure all loose equipment with tape or Type III nylon cord. Tape the turbocharger opening and all windows.
  - **Rigging.** Rig the load according to the steps in Figure 2-48.

***Note*:** The power unit is rigged to fly sideways. The passenger side is designated as the front of the load. The apex fitting on the passenger side must be connected first to prevent the vehicle from tipping.

  - **Hookup.** The static wand person discharges the static electricity with the static wand. The forward hookup person stands on the passenger's seat and places apex fitting 1 onto the forward cargo hook. The aft hookup person stands on the chassis and places apex fitting 2 onto the aft cargo hook. The hookup team then carefully dismounts the vehicle and remains close to the load as the helicopter removes slack from the sling legs. When successful hookup is assured, the hookup team quickly exits the area underneath the helicopter to the designated rendezvous point.
  - **Derigging.** Derigging is the reverse of the preparation and rigging procedures.

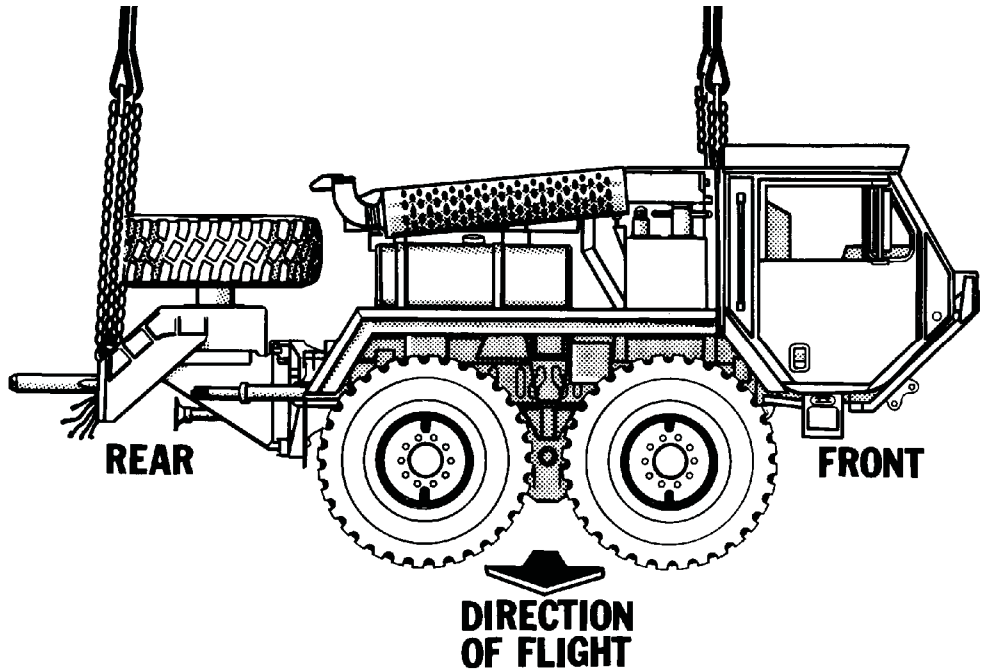

RIGGING STEPS

1. Connect 2 sling legs to apex fitting number 1. Position the apex fitting on top of the muffler area.

2. Loop the chain end of the left sling leg through the lift provision just aft of the passenger side of the cab and insert link 41 in the grabhook.

3. Using the coupling link, attach one additional chain length to the right sling leg chain. Loop the chain end of the right sling leg through the lift provision on the right rear corner just aft of the spare tire and insert link 3 in the grabhook.

4. Connect 2 sling legs to apex fitting number 2. Position the apex fitting on the engine deck on the driver's side.

5. Loop the chain end of the left sling leg through the lift provision just aft of the driver's side of the cab and insert link 41 in the grabhook.

6. Using the coupling link, attach one additional chain length to the right sling leg chain. Loop the chain end of the right sling leg through the lift provision on the left rear corner just aft of the spare tire and insert link 3 in the grabhook.

7. Secure all excess chain with tape or Type III nylon cord.

8. Cluster and tie (breakaway technique) the sling legs in each sling set on top of the vehicle to prevent entanglement during hookup and lift-off.

Figure 2-47. Front Power Unit, MK48

LIGHT ARMORED VEHICLE (LAV) (USMC)

2-51. The light armored vehicle is rigged for dual-point sling load using the following procedures:

- **Applicability**. The following items in Table 2-50 are certified for the helicopter(s) listed in the following table by the US Army Natick Soldier Center:

Table 2-50. Light Armored Vehicle

Nomenclature	*Max Weight (Pounds)*	*Sling Set*	*Link Count Front/Rear*	*Type of Aircraft*
Command and Control TAMCN E0946	27,060	40K	3/45	CH-53
25-MM, TAMCN E0947	28,200	40K	3/20	CH-53
Logistics, TAMCN E0948	28,200	40K	3/45	CH-53
Mortar, TAMCN E0949	27,400	40K	3/20	CH-53
Recovery Unit, TAMCN E0950	23,400	40K	3/50	CH-53
Tow Anti-Tank, TAMCN E0942	27,650	40K	3/30	CH-53
Mobile Electronic Warfare Support System- Product Improvement Program (MEWSS-PIP)	29,480	40K	45/10	CH-53

- **Materials.** The following materials are required to rig this load:
  - Sling set (40,000-pound capacity) with one additional apex fitting.
    - Additional chain length, part number 607050, from a 40,000-pound capacity sling set (2 each) (required for MEWSS-PIP only).
    - Additional coupling link, part number 577-0815, from a 40,000-pound capacity sling set (2 each) (required for MEWSS-PIP only).
  - Tape, adhesive, pressure-sensitive, 2-inch wide roll.
  - Cord, nylon, Type III, 550-pound breaking strength.
  - Webbing, cotton, 1/4-inch, 80-pound breaking strength.
  - Felt sheet, cattle hair, Type IV, 1/2-inch or suitable padding.
- **Personnel.** Two persons can prepare and rig this load in 15 minutes.
- **Procedures.** The following procedures apply to this load:
  - **Preparation.** Prepare the load using the following steps:
    - Secure all loose items inside the LAV.
    - Remove all antennae.
    - Ensure the parking brake is set.
    - Pad and tape all vision blocks, mirrors, and lights.
    - Secure all hatches and panels.
    - Ensure the boom is pinned down and tape the hydraulic cables. (Recovery Unit)
    - Remove the Electronic Surveillance subsystem and the Electronic Attack subsystem according to TM 11275-15/5 and TM 0999B-10/1 (MEWSS-PIP only).
    - Extend the front sling leg chains on the MEWSS-PIP by connecting one additional chain length to each chain on a 40,000-pound capacity sling set with coupling links.
  - **Rigging.** Rig the load according to the steps in Figure 2-49.
  - **Hookup.** The hookup team stands on top of the vehicle. The static wand person discharges the static electricity with the static wand. The forward hookup person places apex fitting 1 onto the forward cargo hook. The aft hookup person places apex fitting 2 onto the aft

cargo hook. The hookup team then carefully dismounts the vehicle and remains close to the load as the helicopter removes slack from the sling legs. When successful hookup is assured, the hookup team quickly exits the area underneath the helicopter to the designated rendezvous point.

- **Derigging**. Derigging is the reverse of the preparation and rigging procedures.

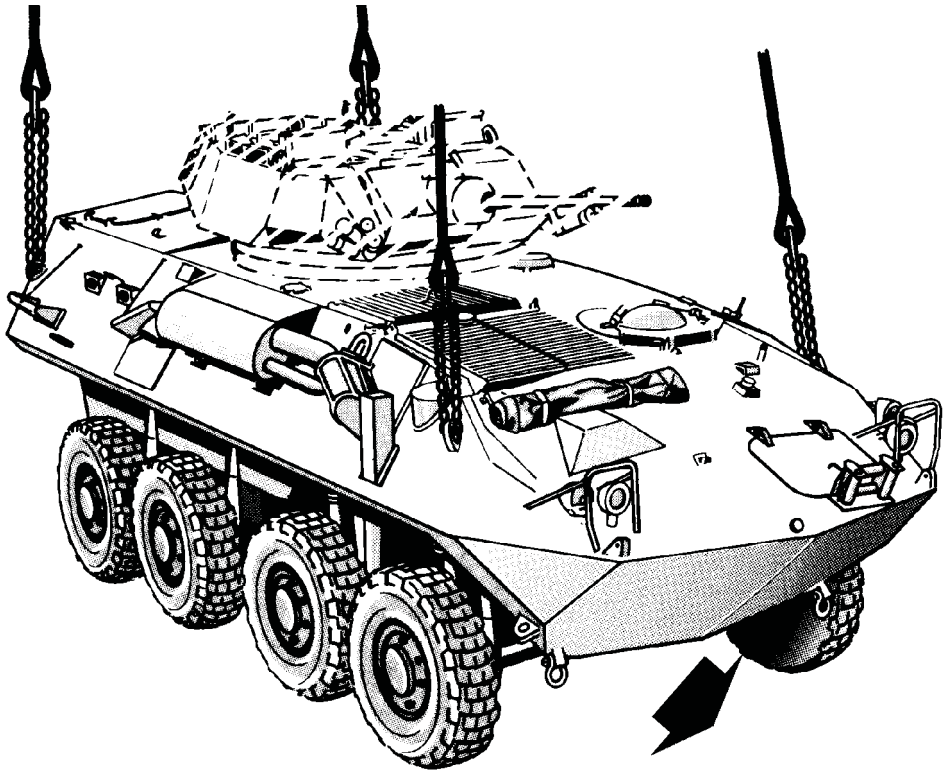

RIGGING STEPS

1. Connect 2 sling legs to apex fitting number 1. Position the apex fitting on top of the LAV.
2. Loop the chain end of the sling legs through their respective lift provisions. Place the correct link from Table 2-50 in the grab hook.
3. Connect 2 sling legs to apex fitting number 2. Position the apex fitting on top of the LAV.
4. Loop the chain end of the sling legs through their respective lift provision. Place the correct link from Table 2-50 in the grab hook.
5. Secure all excess chain with tape or Type III nylon cord.
6. Cluster and tie (breakaway technique) the sling legs in each sling set on top of the LAV to prevent entanglement during hookup and lift-off.

Figure 2-49. Light Armored Vehicle

Chapter 3

Certified Dual-Point Rigging Procedures for Trailers

INTRODUCTION

3-1. This chapter contains rigging procedures for dual-point trailer loads that have been certified for sling load. Each rigging procedure is found in a paragraph that includes a description of the load, materials required for rigging, and steps to complete the procedure. An applicability paragraph is also a part of each paragraph and identifies the certified loads. The certified dual-point rigging procedures for trailers are in this section. Paragraphs 3-2 through 3-25 give detailed instructions for rigging loads.

Note. Reach Pendants may be used on dual-point loads. Place a reach pendant on each apex fitting. A static discharge person is not required when using a Reach Pendant.

M101A2 3/4-TON TRAILER

3-2. The M101A2 3/4-ton trailer is rigged for dual-point sling load using the following procedures:

- **Applicability.** The following items in Table 3-1 are certified for the helicopter(s) listed in the following table by the US Army Natick Soldier Center:

Table 3-1. M101A2 3/4-Ton Trailer

Nomenclature	*Max Weight (Pounds)*	*Sling Set*	*Link Count Front/Rear*	*Type of Aircraft*
M101A2 with Accompanying Load	3,000	10K	3/20	CH-47
Command Version 1 Trailer	1,958	10K	3/20	CH-47
Command Version 2 Trailer	1,981	10K	3/20	CH-47
Len Cable Trailer	2,796	10K	3/20	CH-47
NC Support Trailer	2,643	10K	3/20	CH-47
Maintenance Trailer #2	1,430	10K	3/20	CH-47
Battalion Spares Trailer #1	1,594	10K	3/20	CH-47
Battalion Spares Trailer #2	2,206	10K	3/20	CH-47
Downsized Direct Support Section Trailer	2,700	10K	3/20	CH-47

WARNING

The M101A2 3/4-ton trailer must have a gross weight of 1,575 pounds or more. Add additional weight or cargo to any trailer which weighs less than 1,575 pounds. Place the weight near the center of the trailer.

WARNING

Maximum weight during sling load operations for any variant of the M101A2 3/4-ton trailer is 3,000 pounds.

- **Materials.** The following materials are required to rig this load:
  - Sling set (10,000-pound capacity) with one additional apex fitting.
  - Tape, adhesive, pressure-sensitive, 2-inch wide roll.
  - Cord, nylon, Type III.
  - Webbing, cotton, 1/4-inch.
  - Tie down, CGU-1B or dacron lashing and load binder.
- **Personnel.** Two persons can prepare and rig this load in 15 minutes.
- **Procedures.** The following procedures apply to this load:
  - **Preparation.** Prepare the load using the following steps:
    - Fasten the tailgate in the open position with the chains on each side hooked through the keeper.
    - Remove the front rack and place it in the bed of the trailer. Place the accompanying load on top of the front rack. Secure the accompanying load to the trailer using tie-down straps. Route the straps diagonally across the load from the tailgate hinge to the front lifting shackles.
    - Tape or tie the light cable firmly to the top of the drawbar.
    - Ensure the parking brake is set.
  - **Rigging.** Rig the load according to the steps in Figure 3-1.
  - **Hookup.** The hookup teams stand in the bed of the trailer. The static wand person discharges the static electricity with the static wand. The forward hookup person places apex fitting 1 onto the forward cargo hook. The aft hookup person places apex fitting 2 onto the aft cargo hook. The hookup team then carefully dismounts the vehicle and remains close to the load as the helicopter removes slack from the sling legs. When successful hookup is assured, the hookup team quickly exits the area underneath the helicopter to the designated rendezvous point.
  - **Derigging.** Derigging is the reverse of the preparation and rigging procedures.

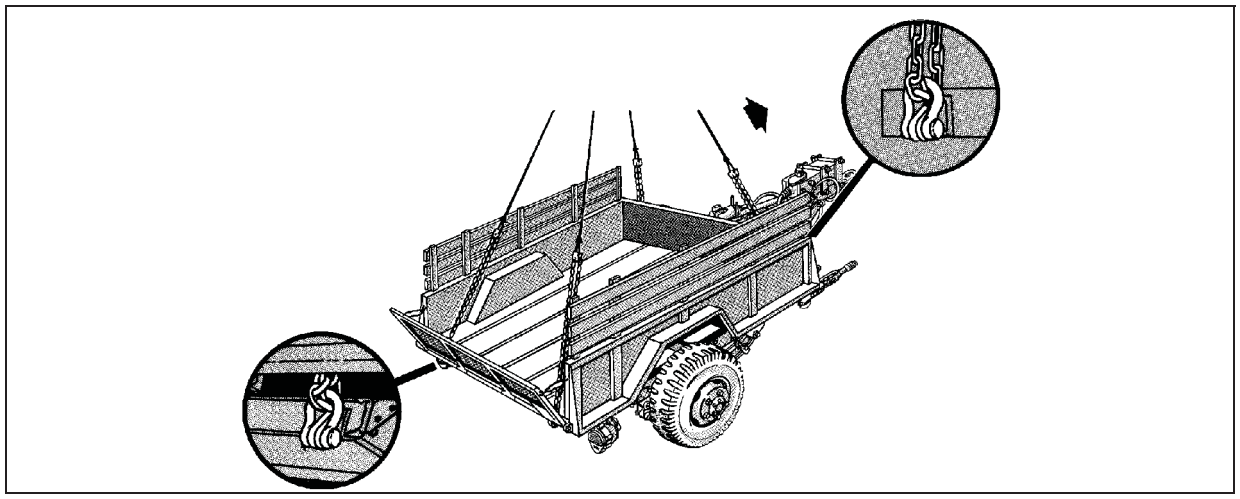

Figure 3-1. M101A2 3/4-Ton Trailer

RIGGING STEPS
1. Connect 2 sling legs to apex fitting number 1. Position the apex fitting on the drawbar. 2. Loop the chain end of the sling legs through their respective lift provisions located on the front of the trailer. Place the correct link from Table 3-1 in the grab hook. 3. Connect 2 sling legs to apex fitting number 2. Route the two sling legs through the opening between the tailgate and the trailer bed. Route each chain on the inboard side of the tailgate hinge. 4. Loop the chain end of the sling legs through their respective lift provisions. Place the correct link from Table 3-1 in the grab hook. Remove the slack from each rear sling leg and tape or tie (breakaway technique) each sling leg to the side rack. 5. Secure all excess chain with tape or Type III nylon cord. 6. Cluster and tie or tape (breakaway technique) the sling legs in each sling set together to prevent entanglement during hookup and lift-off.

Figure 3-1. M101A2 3/4-Ton Trailer (Continued)

M1048 TRAILER WITH TRACKED SUSPENSION SYSTEM (TSS)

3-3. The M1048 trailer with tracked suspension system is rigged for dual-point sling load using the following procedures:

- **Applicability**. The following item in Table 3-2 is certified for the helicopter(s) listed in the following table by the US Army Natick Soldier Center:

Table 3-2. M1048 Trailer with Tracked Suspension System

Nomenclature	*Max Weight (Pounds)*	*Sling Set*	*Link Count Front/Rear*	*Type of Aircraft*
M1048 Trailer (TSS)	7,880	10K	16/3	CH-47

- **Materials.** The following materials are required to rig this load:
  - Sling set (10,000-pound capacity) with one additional apex fitting.
  - Tape, adhesive, pressure-sensitive, 2-inch wide roll.
  - Cord, nylon, Type III, 550-pound breaking strength.
  - Webbing, cotton, 1/4-inch, 80-pound breaking strength.
- **Personnel.** Two persons can prepare and rig this load in 10 minutes.
- **Procedures.** The following procedures apply to this load:
  - **Preparation.** Prepare the load using the following steps:
    - Secure all loose chains, hoses, and cables to the trailer drawbar with Type III nylon cord.
    - Secure any lids, caps, or loose items with tape or Type III nylon cord.
    - Tape or tie the light cable firmly to the top of the drawbar.
    - Place the front leveling jacks in the down position. Ensure the base of the leveling jacks is not extended. Stow the jack handles and secure with Type III nylon cord. Secure the rear leveling jacks in the up position. The trailer should lean downward at the lunette end.
    - Ensure the parking brake is set.
  - **Rigging.** Rig the load according to the steps in Figure 3-2.

- **Hookup**. The hookup team stands in the bed of the trailer. The static wand person discharges the static electricity with the static wand. The hookup person places the apex fitting onto the aircraft cargo hook. The hookup team then carefully dismounts the vehicle and remains close to the load as the helicopter removes slack from the sling legs. When successful hookup is assured, the hookup team quickly exits the area underneath the helicopter to the designated rendezvous point.
- **Derigging.** Derigging is the reverse of the preparation and rigging procedures.

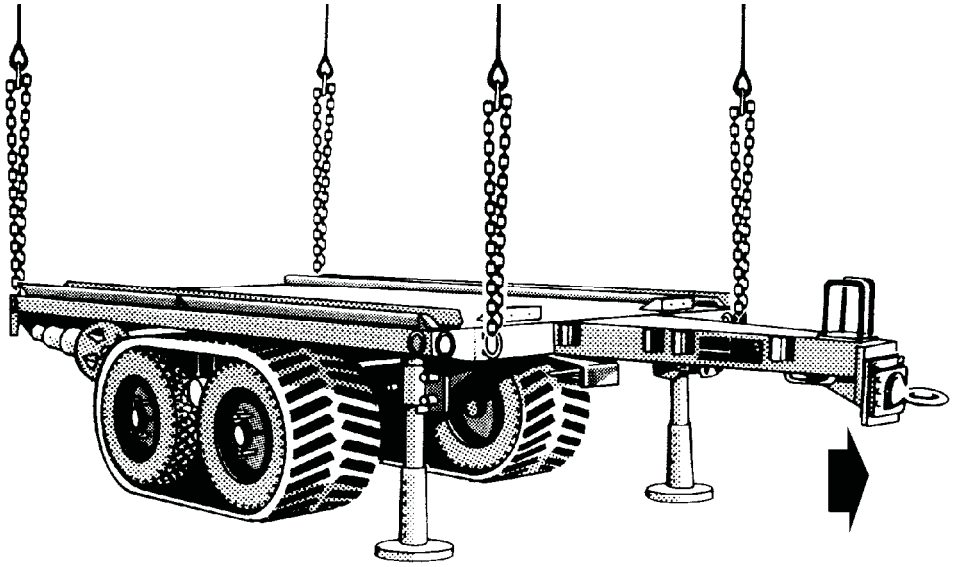

RIGGING STEPS

1. Connect 2 sling legs to apex fitting number 1. Position the apex fitting on the front (lunette end) of the trailer.
2. Loop the chain end of the sling legs through their respective lift provisions located on the front of the trailer. Place the correct link from Table 3-2 in the grab hook.
3. Connect 2 sling legs to apex fitting number 2. Position the apex fitting on the rear of the trailer.
4. Loop the chain end of the sling legs through their respective lift provisions. Place the correct link from Table 3-2 in the grab hook.
5. Secure all excess chain with tape or Type III nylon cord.
6. Cluster and tie (breakaway technique) the sling legs in each sling set together to prevent entanglement during hookup and lift-off.

Figure 3-2. M1048 Trailer with Tracked Suspension System

M989 HEAVY-EXPANDED MOBILITY AMMUNITION TRAILER (HEMAT)

3-4. The M989 heavy-expanded mobility ammunition trailer is rigged for dual-point sling load using the following procedures:

- **Applicability**. The following item in Table 3-3 is certified for the helicopter(s) listed in the following table by the US Army Natick Soldier Center:

Table 3-3. M989 Heavy-Expanded Mobility Ammunition Trailer

Nomenclature	*Max Weight (Pounds)*	*Sling Set*	*Link Count Front/Rear*	*Type of Aircraft*
M989 HEMAT (Empty)	7,640	10K	40/4	CH-47

- **Materials.** The following materials are required to rig this load:
  - Sling set (10,000-pound capacity) with one additional apex fitting.
  - Tape, adhesive, pressure-sensitive, 2-inch wide roll.
  - Cord, nylon, Type III.
  - Webbing, cotton, 1/4-inch.
  - Tie-down CGU-1/B (8 each).
- **Personnel.** Two persons can prepare and rig this load in 15 minutes.
- **Procedures.** The following procedures apply to this load:
  - **Preparation.** Prepare the load using the following steps:
    - At each corner of the trailer, slide the lifting provisions out until they are completely extended. Do not lift the trailer unless the provisions are fully extended and secured in position.
    - Remove the side and end panels. Place two panels side by side on the trailer so that the panel ends are approximately 10 inches from the front of the trailer. Make sure the panels are positioned lengthwise on the trailer. Place the remaining panels on top of the respective panels on the trailer.
    - Secure the panels on the trailer with the tie-down straps. Attach the hook end of one tie-down strap to a tie-down ring on the trailer bed beside the panels approximately 1 foot from the end of the panels. Connect and tighten the ratchet end to a tie-down ring on the other side of the panels. Secure loose end of strap. Repeat with a second tie-down strap at the other end of the panels.
    - To secure the panels lengthwise, route the hook end of one tie-down strap around the vertical metal stiffeners on the top panel of the stack of panels on the left side of the trailer. Attach the hook end to a tie-down ring on the front end of the trailer bed. Connect and tighten the ratchet end to a tie-down ring on the other end of the stack of panels. Secure loose end of strap. Repeat with a second tie-down strap on the other stack of panels.
    - Tape or tie the intervehicular cable, hoses, and safety chains firmly to the top of the drawbar with tape or Type III nylon cord.
    - Engage the parking brake.
  - **Rigging.** Rig the load according to the steps in Figure 3-3.
  - **Hookup.** The hookup teams stand in the bed of the trailer. The static wand person discharges the static electricity with the static wand. The forward hookup person places apex fitting 1 onto the forward cargo hook. The aft hookup person places apex fitting 2 onto the aft cargo hook. The hookup team then carefully dismounts the vehicle and remains close to the

load as the helicopter removes slack from the sling legs. When successful hookup is assured, the hookup team quickly exits the area underneath the helicopter to the designated rendezvous point.

- **Derigging.** Derigging is the reverse of the preparation and rigging procedures.

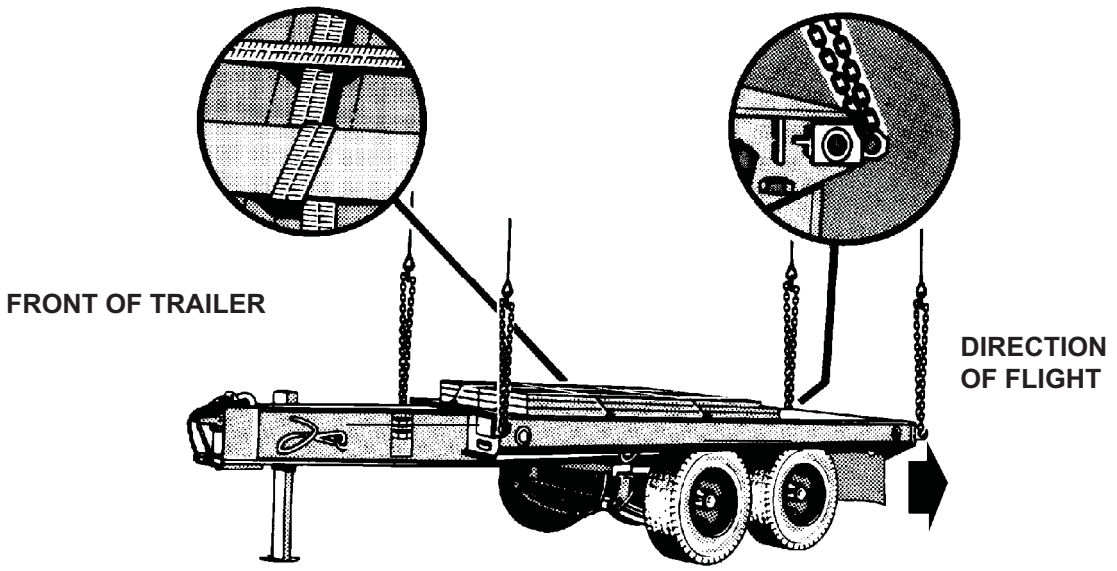

RIGGING STEPS

1. Connect 2 sling legs to apex fitting number 1. Position the apex fitting on the front (lunette end) of the trailer.

2. Loop the chain end of the sling legs through their respective lift provisions located on the front of the trailer. Place the correct link from Table 3-3 in the grab hook.

3. Connect 2 sling legs to apex fitting number 2. Position the apex fitting on the rear of the trailer.

4. Loop the chain end of the sling legs through their respective lift provisions. Place the correct link from Table 3-3 in the grab hook.

5. Secure all excess chain with tape or Type III nylon cord.

6. Cluster and tie (breakaway technique) the sling legs in each sling set together to prevent entanglement during hookup and lift-off.

Figure 3-3. M989 Heavy-Expanded Mobility Ammunition Trailer

M989A1 HEAVY-EXPANDED MOBILITY AMMUNITION TRAILER (HEMAT II)

3-5. The M989A1 heavy-expanded mobility ammunition trailer is rigged for dual-point sling load using the following procedures:

- **Applicability**. The following item in Table 3-4 is certified for the helicopter(s) listed in the following table by the US Army Natick Soldier Center:

Table 3-4. M989A1 Heavy-Expanded Mobility Ammunition Trailer II

Nomenclature	*Max Weight (Pounds)*	*Sling Set*	*Link Count Front/Rear*	*Type of Aircraft*
M989 HEMAT II	10,650	25K	15/3	CH-47

CAUTION

The following rigging procedures are for the M989A1 HEMAT II only. Do not use these procedures when rigging the M989 HEMAT.

- **Materials.** The following materials are required to rig this load:
  - Sling set (25,000-pound capacity) with one additional apex fitting.
  - Tape, adhesive, pressure-sensitive, 2-inch wide roll.
  - Cord, nylon, Type III, 550-pound breaking strength.
  - Webbing, cotton, 1/4-inch, 80-pound breaking strength.
  - Tie-down CGU-1/B (as required).
- **Personnel.** Two persons can prepare and rig this load in 10 minutes.
- **Procedures.** The following procedures apply to this load:
  - **Preparation.** Prepare the load using the following steps:
    - Inspect the lift provisions at the four upper corners of the cargo bed.
    - Raise the trailer tongue and secure it in the up position with a CGU-1/B.
    - Secure the brake hose, safety hose, intravehicular cable(s), and safety chains to the trailer and tongue with tape or Type III nylon cord.
    - Engage the steering lockout pin.
    - Secure the side panels to the cargo deck with CGU-1Bs.
  - **Rigging.** Rig the load according to the steps in Figure 3-4.
  - **Hookup.** The hookup teams stand on top of the M989A1. The static wand person discharges the static electricity with the static wand. The forward hookup person places apex fitting 1 onto the forward cargo hook. The aft hookup person places apex fitting 2 onto the aft cargo hook. The hookup team then carefully dismounts the vehicle and remains close to the

load as the helicopter removes slack from the sling legs. When successful hookup is assured, the hookup team quickly exits the area underneath the helicopter to the designated rendezvous point.

CAUTION

Brief the helicopter crew to relax sling leg tension and hover to the side of the load when releasing the apex fitting to prevent damage to the panels on top of the trailer.

- **Derigging.** Derigging is the reverse of the preparation and rigging procedures.

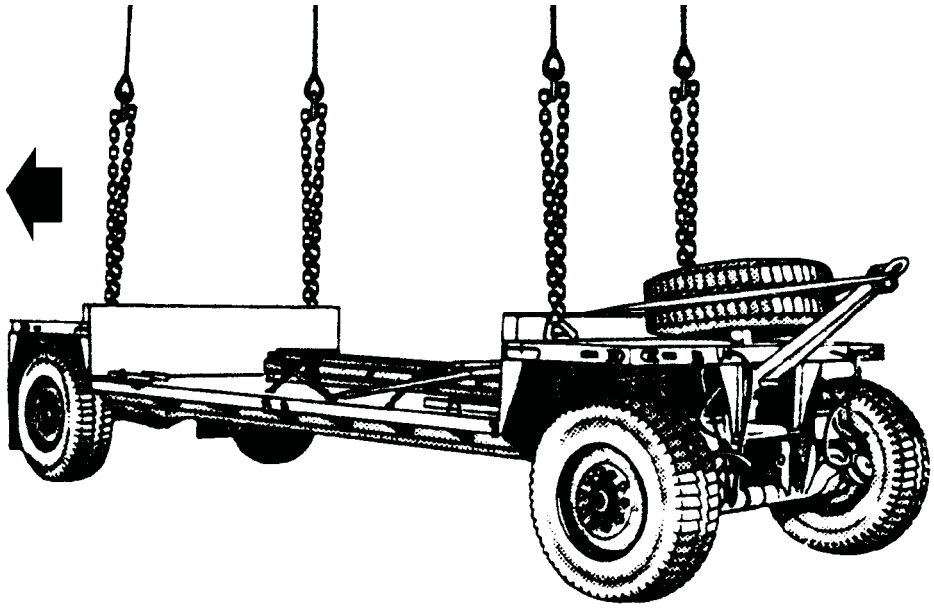

RIGGING STEPS

1. Connect 2 sling legs to apex fitting number 1. Position the apex fitting on top of the front deck of the trailer.
2. Loop the chain end of the sling legs through their respective lift provisions located on the front (tongue end) of the trailer. Place the correct link from Table 3-4 in the grab hook.
3. Connect 2 sling legs to apex fitting number 2. Position the apex fitting on the top of the rear deck of the trailer.
4. Loop the chain end of the sling legs through their respective lift provisions. Place the correct link from Table 3-4 in the grab hook.
5. Secure all excess chain with tape or Type III nylon cord.
6. Cluster and tie (breakaway technique) the sling legs in each sling set together to prevent entanglement during hookup and lift-off

Figure 3-4. M989A1 Heavy-Expanded Mobility Ammunition Trailer II

MK14 TRAILER, CONTAINER HAULER

3-6. The Mk14 trailer, container hauler is rigged for dual-point sling load using the following procedures:

- **Applicability**. The following item in Table 3-5 is certified for the helicopter(s) listed in the following table by the US Army Natick Soldier Center:

Table 3-5. Mk14 Trailer, Container Hauler

Nomenclature	*Max Weight (Pounds)*	*Sling Set*	*Link Count Front/Rear*	*Type of Aircraft*
MK 14 Trailer, Container Hauler	16,000	40K	3/15	CH-53

- **Materials.** The following materials are required to rig this load:
  - Sling set (40,000-pound capacity) with one additional apex fitting.
  - Tape, adhesive, pressure-sensitive, 2-inch wide roll.
  - Cord, nylon, Type III, 550-pound breaking strength.
  - Webbing, cotton, 1/4-inch, 80-pound breaking strength.
- **Personnel.** Two persons can prepare and rig this load in 15 minutes.
- **Procedures.** The following procedures apply to this load:
  - **Preparation.** Prepare the load using the following steps:
    - Disengage the Mk14 from the Mk48 prime mover according to the operator's manual.
    - Secure all hoses with tape or Type III nylon cord.
    - Tape all lights, reflectors, and glass fixtures.
    - Ensure all tool compartment doors are closed and secured.
    - Remove the safety retainer pins from the lifting eyelets located under the doors in the bed of the trailer. Unscrew the lifting eyelets from their stored position and reinsert the lifting eyelets so that the eyelet portion is accessible from the bed of the trailer through the access doors. Screw the lifting eyelets all the way in and back out one full turn. Reinsert the safety retainer pins to prevent the lifting eyelets from backing out in flight.
  - **Rigging.** Rig the load according to the steps in Figure 3-5.
  - **Hookup.** The hookup teams stand on the bed of the trailer. The static wand person discharges the static electricity with the static wand. The forward hookup person places apex fitting 1 onto the forward cargo hook. The aft hookup person places apex fitting 2 onto the aft cargo hook. The hookup team then carefully dismounts the vehicle and remains close to the load as the helicopter removes slack from the sling legs. When successful hookup is assured, the hookup team quickly exits the area underneath the helicopter to the designated rendezvous point.
  - **Derigging.** Derigging is the reverse of the preparation and rigging procedures.

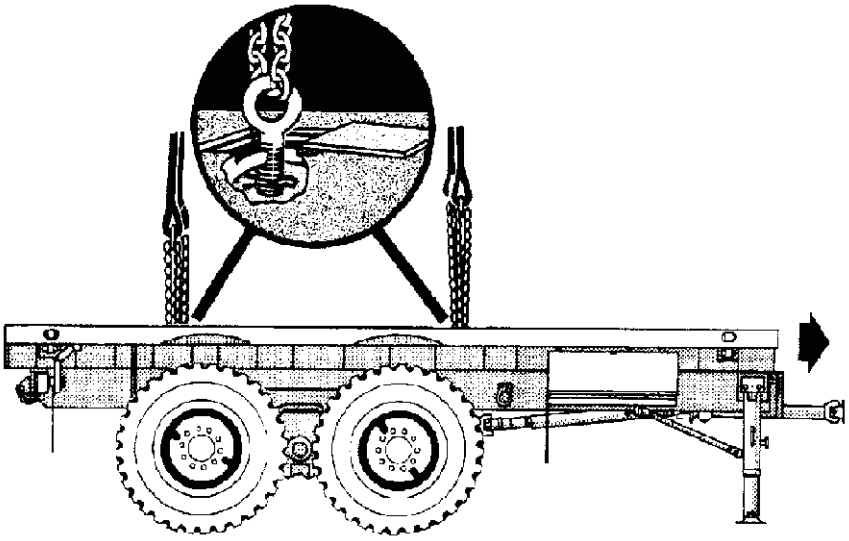

RIGGING STEPS

1. Connect 2 sling legs to apex fitting number 1. Position the apex fitting on top of the forward end of the trailer.

2. Loop the chain end of the sling legs through their respective lift provisions located in the bed of the trailer. Place the correct link from Table 3-5 in the grab hook.

3. Connect 2 sling legs to apex fitting number 2. Position the apex fitting on top of the aft end of the trailer.

4. Loop the chain end of the sling legs through their respective lift provisions in the bed of the trailer. Place the correct link from Table 3-5 in the grab hook.

5. Secure all excess chain with tape or Type III nylon cord.

6. Cluster and tie (breakaway technique) the sling legs in each sling set together to prevent entanglement during hookup and lift-off.

Figure 3-5. Mk14 Trailer, Container Hauler

MK15 TRAILER, WRECKER/RECOVERY

3-7. The Mk15 trailer, wrecker/recovery is rigged for dual-point sling load using the following procedures:

- **Applicability**. The following item in Table 3-6 is certified for the helicopter(s) listed in the following table by the US Army Natick Soldier Center:

Table 3-6. Mk15 Trailer, Wrecker/Recovery

Nomenclature	*Max Weight (Pounds)*	*Sling Set*	*Link Count Front/Rear*	*Type of Aircraft*
MK 15 Trailer, Wrecker/Recovery	26,000	40K	3/10	CH-53

- **Materials.** The following materials are required to rig this load:
  - Sling set (40,000-pound capacity) with one additional apex fitting.
  - Tape, adhesive, pressure-sensitive, 2-inch wide roll.
  - Cord, nylon, Type III, 550-pound breaking strength.
  - Webbing, cotton, 1/4-inch, 80-pound breaking strength.
  - Tie-down strap, cargo, CGU-1/B, as required.
- **Personnel.** Two persons can prepare and rig this load in 30 minutes.
- **Procedures.** The following procedures apply to this load:
  - **Preparation.** Prepare the load using the following steps:
    - Disengage the Mk15 from the Mk48 prime mover according to the operator's manual.
    - Remove the A-frame from the rear of the trailer. Stow in the trailer bed and secure with the CGU-1/B tie-down strap.
    - Secure all hoses with tape or Type III nylon cord.
    - Tape all lights, reflectors, and glass fixtures.
    - Ensure all tool compartment doors re closed and secured.
    - Remove the safety retainer pins from the lifting eyelets located under the doors in the bed of the trailer. Unscrew the lifting eyelets from their stored position and reinsert the lifting eyelets so that the eyelet portion is accessible from the bed of the trailer through the access doors. Screw the lifting eyelets all the way in and back out one full turn. Reinsert the safety retainer pins to prevent the lifting eyelets from backing out in flight.
  - **Rigging.** Rig the load according to the steps in Figure 3-6.
  - **Hookup.** The hookup teams stand on the bed of the trailer. The static wand person discharges the static electricity with the static wand. The forward hookup person places apex fitting 1 onto the forward cargo hook. The aft hookup person places apex fitting 2 onto the aft cargo hook. The hookup team then carefully dismounts the vehicle and remains close to the load as the helicopter removes slack from the sling legs. When successful hookup is assured, the hookup team quickly exits the area underneath the helicopter to the designated rendezvous point.
  - **Derigging.** Derigging is the reverse of the preparation and rigging procedures.

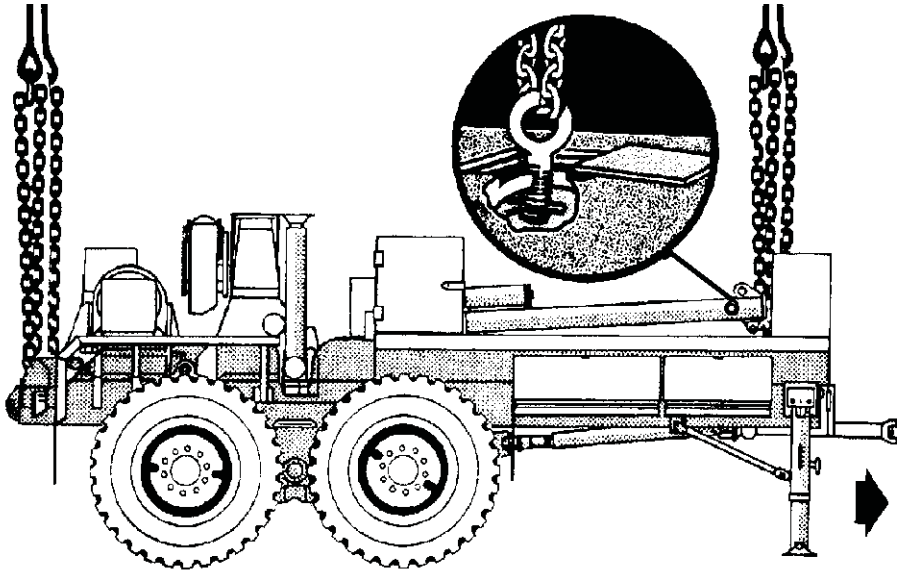

RIGGING STEPS

1. Connect 2 sling legs to apex fitting number 1. Position the apex fitting on top of the trailer bed behind the stowage compartment.

2. Loop the chain end of the sling legs through their respective lift provisions located in the bed behind the stowage compartment. Place the correct link from Table 3-6 in the grab hook.

3. Connect 2 sling legs to apex fitting number 2. Position the apex fitting behind the trailer.

4. Loop the chain end of the sling legs through their respective lift provisions located on the rear of the trailer on each side of the towing pintle hook. Place the correct link from Table 3-6 in the grab hook.

5. Secure all excess chain with tape or Type III nylon cord.

6. Cluster and tie (breakaway technique) the sling legs in each sling set together to prevent entanglement during hookup and lift-off.

Figure 3-6. Mk15 Trailer, Wrecker/Recovery

MK16 TRAILER, FIFTH-WHEEL ADAPTER

3-8. The Mk16 trailer, fifth-wheel adapter is rigged for dual-point sling load using the following procedures:

- **Applicability**. The following item in Table 3-7 is certified for the helicopter(s) listed in the following table by the US Army Natick Soldier Center:

Table 3-7. Mk16 Trailer, Fifth-Wheel Adapter

Nomenclature	*Max Weight (Pounds)*	*Sling Set*	*Link Count Front/Rear*	*Type of Aircraft*
MK 16 Trailer, Fifth-Wheel Adapter	16,000	40K	3/3	CH-53

- **Materials.** The following materials are required to rig this load:
  - Sling set (40,000-pound capacity) with one additional apex fitting.
  - Tape, adhesive, pressure-sensitive, 2-inch wide roll.
  - Cord, nylon, Type III, 550-pound breaking strength.
  - Webbing, cotton, 1/4-inch, 80-pound breaking strength.
- **Personnel.** Two persons can prepare and rig this load in 30 minutes.
- **Procedures.** The following procedures apply to this load:
  - **Preparation.** Prepare the load using the following steps:
    - Disengage the Mk16 from the Mk48 prime mover according to the operator's manual.
    - Secure all hoses with tape or Type III nylon cord.
    - Tape all lights, reflectors, and glass fixtures.
    - Ensure all tool compartment doors are closed and secured.
    - Remove the safety retainer pins from the lifting eyelets located under the doors in the bed of the trailer. Unscrew the lifting eyelets from their stored position and reinsert the lifting eyelets so that the eyelet portion is accessible from the bed of the trailer through the access doors. Screw the lifting eyelets all the way in and back out one full turn. Reinsert the safety retainer pins to prevent the lifting eyelets from backing out in flight.
  - **Rigging.** Rig the load according to the steps in Figure 3-7.
  - **Hookup.** The hookup teams stand on the bed of the trailer. The static wand person discharges the static electricity with the static wand. The forward hookup person places apex fitting 1 onto the forward cargo hook. The aft hookup person places apex fitting 2 onto the aft cargo hook. The hookup team then carefully dismounts the vehicle and remains close to the load as the helicopter removes slack from the sling legs. When successful hookup is assured, the hookup team quickly exits the area underneath the helicopter to the designated rendezvous point.
  - **Derigging.** Derigging is the reverse of the preparation and rigging procedures.

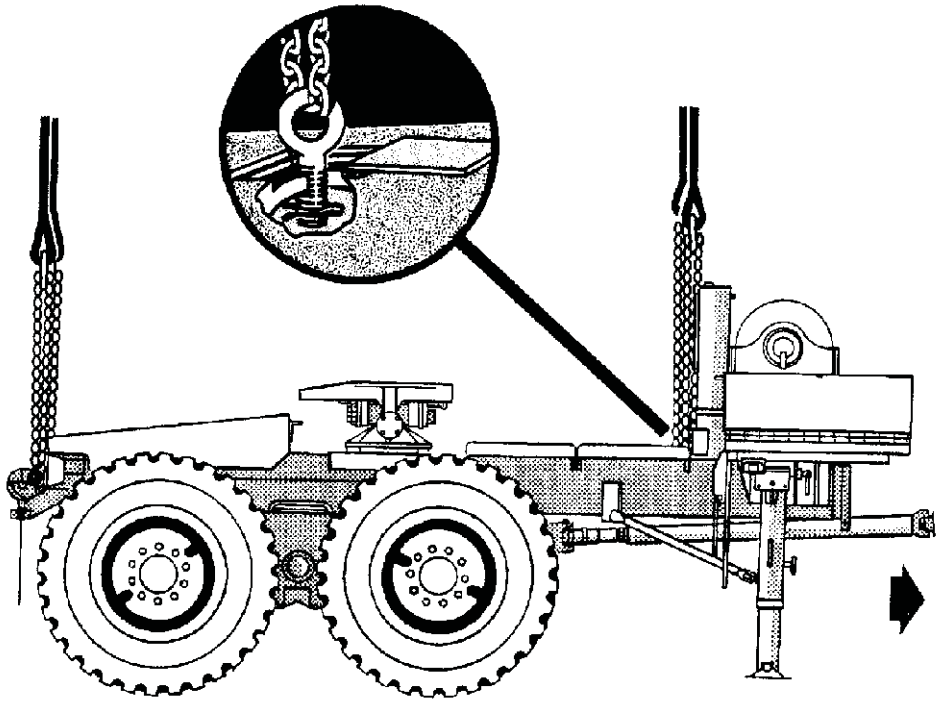

RIGGING STEPS

1. Connect 2 sling legs to apex fitting number 1. Position the apex fitting on top of the winch.
2. Loop the chain end of the sling legs through their respective lift provisions located on the main frame below the winch. Place the correct link from Table 3-7 in the grab hook.
3. Connect 2 sling legs to apex fitting number 2. Position the apex fitting on top of the aft end of the trailer adapter.
4. Loop the chain end of the sling legs through their respective lift provisions located on each side of the towing pintle hook. Place the correct link from Table 3-7 in the grab hook.
5. Secure all excess chain with tape or Type III nylon cord.
6. Cluster and tie or tape (breakaway technique) the sling legs in each sling set together to prevent entanglement during hookup and lift-off.

Figure 3-7. Mk16 Trailer, Fifth-Wheel Adapter

MK17 TRAILER, DROP SIDE, CARGO

3-9. The Mk17 trailer, drop side, cargo is rigged for dual-point sling load using the following procedures:

- **Applicability.** The following item in Table 3-8 is certified for the helicopter(s) listed in the following table by the US Army Natick Soldier Center:

Table 3-8. Mk17 Trailer, Drop Side, Cargo

Nomenclature	*Max Weight (Pounds)*	*Sling Set*	*Link Count Front/Rear*	*Type of Aircraft*
MK 17 Trailer, Drop Side, Cargo	23,000	40K	4/16	CH-53

- **Materials.** The following materials are required to rig this load:
  - Sling set (40,000-pound capacity) with one additional apex fitting.
  - Tape, adhesive, pressure-sensitive, 2-inch wide roll.
  - Cord, nylon, Type III, 550-pound breaking strength.
  - Webbing, cotton, 1/4-inch, 80-pound breaking strength.
- **Personnel.** Two persons can prepare and rig this load in 20 minutes.
- **Procedures.** The following procedures apply to this load:
  - **Preparation.** Prepare the load using the following steps:
    - Disengage the Mk17 from the Mk48 prime mover according to the operator's manual.
    - Secure all hoses with tape or Type III nylon cord.
    - Tape all lights, reflectors, and glass fixtures.
    - Ensure all tool compartment doors are closed and secured.
    - Remove the safety retainer pins from the lifting eyelets located under the doors in the bed of the trailer. Unscrew the lifting eyelets from their stored position and reinsert the lifting eyelets so that the eyelet portion is accessible from the bed of the trailer through the access doors. Screw the lifting eyelets all the way in and back out one full turn. Reinsert the safety retainer pins to prevent the lifting eyelets from backing out in flight.
  - **Rigging.** Rig the load according to the steps in Figure 3-8.
  - **Hookup.** The hookup teams stand on the bed of the trailer. The static wand person discharges the static electricity with the static wand. The forward hookup person places apex fitting 1 onto the forward cargo hook. The aft hookup person places apex fitting 2 onto the aft cargo hook. The hookup team then carefully dismounts the vehicle and remains close to the load as the helicopter removes slack from the sling legs. When successful hookup is assured, the hookup team quickly exits the area underneath the helicopter to the designated rendezvous point.
  - **Derigging.** Derigging is the reverse of the preparation and rigging procedures.

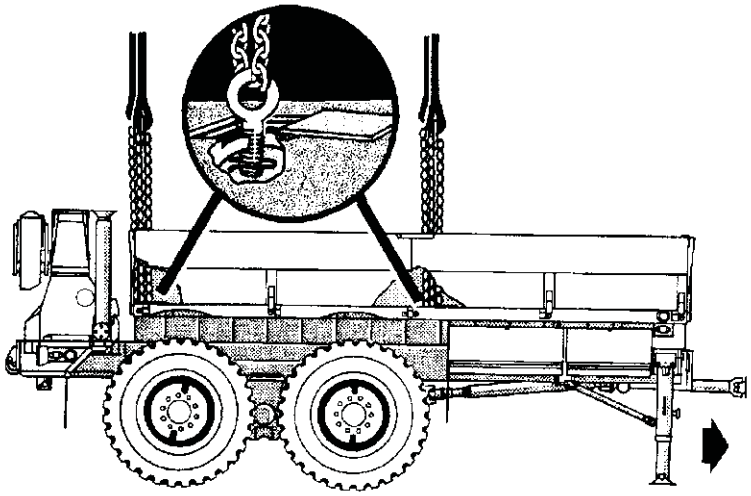

RIGGING STEPS

1. Connect 2 sling legs to apex fitting number 1. Position the apex fitting on top of the front of the trailer.

2. Loop the chain end of the sling legs through their respective lift provisions located in the trailer bed. Place the correct link from Table 3-8 in the grab hook.

3. Connect 2 sling legs to apex fitting number 2. Position the apex fitting on top of the aft end of the trailer.

4. Loop the chain end of the sling legs through their respective lift provisions located on the aft end of the trailer just forward of the crane. Place the correct link from Table 3-8 in the grab hook.

5. Secure all excess chain with tape or Type III nylon cord.

6. Cluster and tie (breakaway technique) the sling legs in each sling set together to prevent entanglement during hookup and lift-off.

Figure 3-8. Mk17 Trailer, Drop Side, Cargo

M871A1 SEMITRAILER

3-10. The M871A1 semitrailer is rigged for dual-point sling load using the following procedures:

- **Applicability.** The following item in Table 3-9 is certified for the helicopter(s) listed in the following table by the US Army Natick Soldier Center:

Table 3-9. M871A1 Semitrailer

Nomenclature	*Max Weight (Pounds)*	*Sling Set*	*Link Count Front/Rear*	*Type of Aircraft*
M871A1 Semitrailer (Empty)	12,240	25K	30/3	CH-47

Note: This trailer must be empty to sling load.

- **Materials.** The following materials are required to rig this load:
  - Sling set (25,000-pound capacity) with one additional apex fitting.
  - Tape, adhesive, pressure-sensitive, 2-inch wide roll.
  - Cord, nylon, Type III, 550-pound breaking strength.
  - Webbing, cotton, 1/4-inch, 80-pound breaking strength.
  - Tie-down strap, cargo, CGU-1/B, as required.
- **Personnel.** Two persons can prepare and rig this load in 20 minutes.
- **Procedures.** The following procedures apply to this load:
  - **Preparation.** Prepare the load using the following steps:
    - Level the trailer by adjusting the landing gear.
    - Remove the sideboards and tailgate panels. Secure the sideboards and tailgate panels in the front of trailer using CGU-1/B tie-down straps.
    - Secure the compartment doors with tape or Type III nylon cord.
    - Secure the spare tire in the compartment with Type III nylon cord.
    - At each lifting provision location, pull down on the latch and push out on the bolt at the inboard end of each lifting eye. Slide the lifting eye out from the housing as far as it will go. Do not lift the semitrailer unless each lifting eye is fully extended.
  - **Rigging.** Rig the load according to the steps in Figure 3-9.
  - **Hookup.** The hookup teams stand on the bed of the trailer. The static wand person discharges the static electricity with the static wand. The forward hookup person places apex fitting 1 onto the forward cargo hook. The aft hookup person places apex fitting 2 onto the aft cargo hook. The hookup team then carefully dismounts the vehicle and remains close to the load as the helicopter removes slack from the sling legs. When successful hookup is assured, the hookup team quickly exits the area underneath the helicopter to the designated rendezvous point.
  - **Derigging.** Derigging is the reverse of the preparation and rigging procedures.

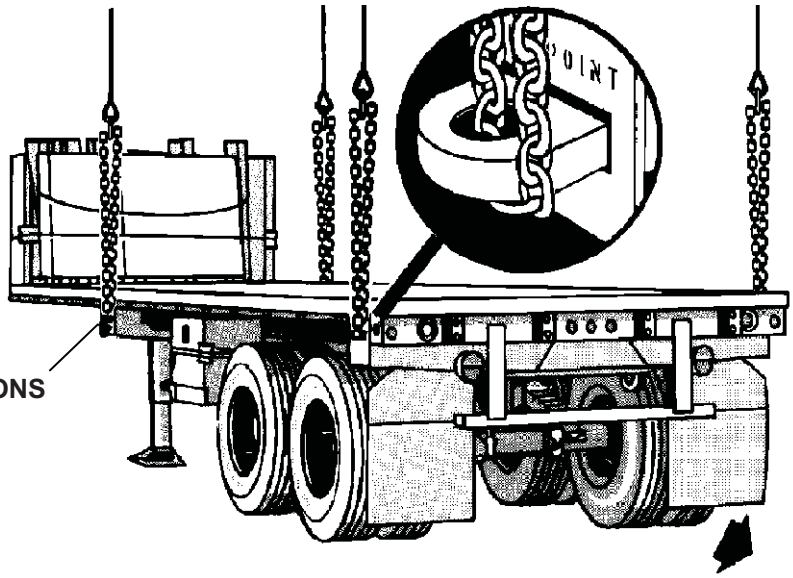

RIGGING STEPS

1. Connect 2 sling legs to apex fitting number 1. Position the apex fitting on top of the kingpin end of the trailer.

2. Loop the chain end of the sling legs through their respective lift provisions located outboard from the landing gear. Place the correct link from Table 3-9 in the grab hook.

3. Connect 2 sling legs to apex fitting number 2. Position the apex fitting on top of the wheel end of the trailer.

4. Loop the chain end of the sling legs through their respective lift provisions located aft of the rear wheels. Place the correct link from Table 3-9 in the grab hook.

5. Secure all excess chain with tape or Type III nylon cord.

6. Cluster and tie (breakaway technique) the sling legs in each sling set together to prevent entanglement during hookup and lift-off.

Figure 3-9. M871A1 Semitrailer

HIGH MOBILITY TRAILERS (HMT), M1101/M1102

3-11. The high mobility trailers, M1101/M1102 are rigged for dual-point sling load using the following procedures:

- **Applicability.** The following items in Table 3-10 are certified for the helicopter(s) listed in the following table by the US Army Natick Soldier Center:

Table 3-10. High Mobility Trailers

Nomenclature	*Max Weight (Pounds)*	*Sling Set*	*Link Count Front/Rear*	*Type of Aircraft*
High Mobility Trailer (Light), M1101	3,400	10K	20/3	CH-47
High Mobility Trailer (Heavy), M1102	4,200	10K	20/3	CH-47
Tactical Messaging System (TMS), Cargo Carrier, M1102	4,200	10K	20/3	CH-47

- **Materials.** The following materials are required to rig this load:
  - Sling set (10,000-pound capacity) with one additional apex fitting.
  - Tape, adhesive, pressure-sensitive, 2-inch wide roll.
  - Cord, nylon, Type III, 550-pound breaking strength.
  - Webbing, cotton, 1/4-inch, 80-pound breaking strength.
  - Felt sheet, cattle hair, Type IV, 1/2-inch or suitable substitute.
  - Tie-down strap, cargo, CGU-1/B, as required.
- **Personnel.** Two persons can prepare and rig this load in 10 minutes.
- **Procedures.** The following procedures apply to this load:
  - **Preparation.** Prepare the load using the following steps:
    - Remove the two stabilizer legs from their storage location on the front of the trailer. Place the lower support section in the fully retracted position. Install the stabilizer legs on the rear of the trailer.
    - Install the front jack and lower the lunette as close to the ground as possible.
    - Remove the canvas cover and racks from the trailer. Place these items in the bed of the trailer. Place the accompanying load on top of the canvas cover and secure it with the tie-down straps.
    - Secure the light cable to the top of the drawbar with tape or Type III nylon cord.
    - Engage the parking brake.
  - **Rigging.** Rig the load according to the steps in Figure 3-10.
  - **Hookup.** The hookup teams stand in the bed of the trailer and on the drawbar. The static wand person discharges the static electricity with the static wand. The forward hookup person places apex fitting 1 onto the forward cargo hook. The aft hookup person places apex fitting 2 onto the aft cargo hook. The hookup team then carefully dismounts the vehicle and remains close to the load as the helicopter removes slack from the sling legs. When successful hookup is assured, the hookup team quickly exits the area underneath the helicopter to the designated rendezvous point.
  - **Derigging.** Derigging is the reverse of the preparation and rigging procedures.

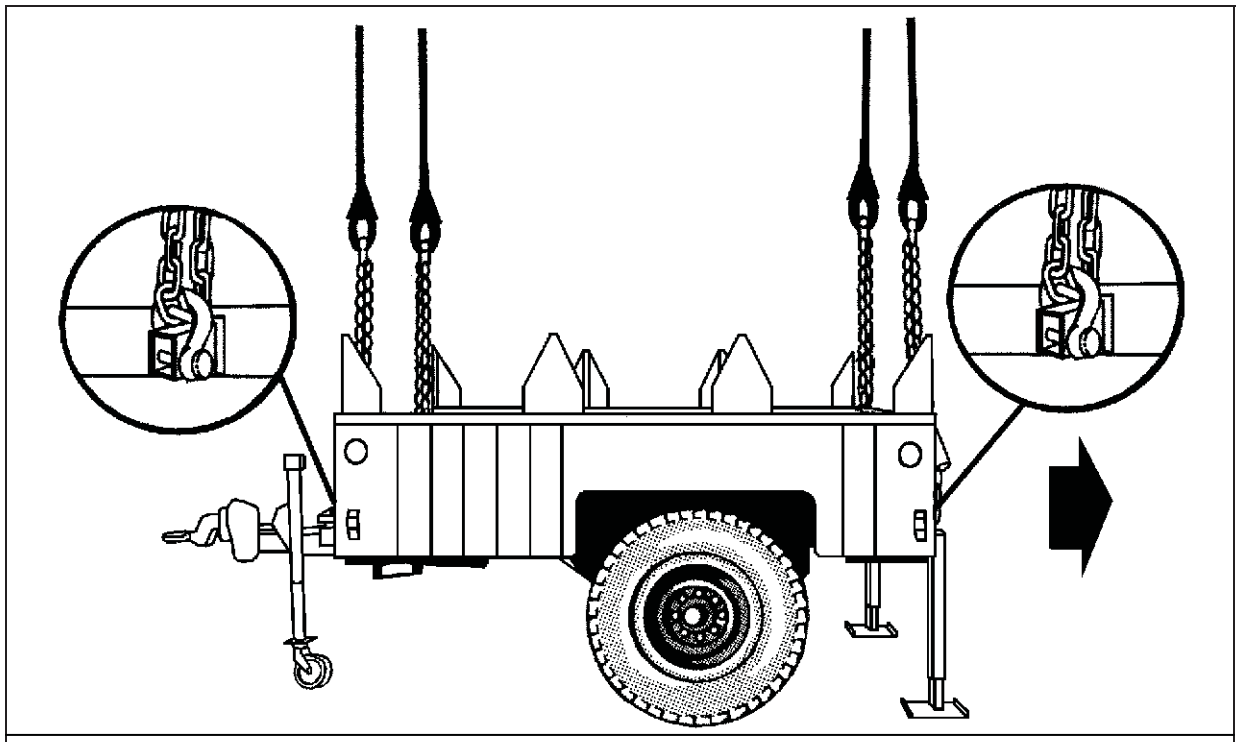

RIGGING STEPS

1. Connect 2 sling legs to apex fitting number 1. Position the apex fitting on top of the trailer.
2. Loop the chain end of the sling legs through their respective lift provisions. Place the correct link from Table 3-10 in the grab hook.
3. Connect 2 sling legs to apex fitting number 2. Position the apex fitting on top of the trailer.
4. Loop the chain end of the sling legs through their respective lift provisions. Place the correct link from Table 3-10 in the grab hook.
5. Secure all excess chain with tape or Type III nylon cord.
6. Pad the chain at and below where the chain contacts the trailer walls.
7. Cluster and tie (breakaway technique) the sling legs in each sling set together to prevent entanglement during hookup and lift-off.

Figure 3-10. High Mobility Trailers

HIGH MOBILITY TRAILERS (HMT) WITH GENERATOR FOR JOINT SURVEILLANCE TARGET ATTACK RADAR (JSTAR) SYSTEMS

3-12. The high mobility trailers, with generator for joint surveillance target attack radar systems are rigged for dual-point sling load using the following procedures:

- **Applicability.** The following items in Table 3-11 are certified for the helicopter(s) listed in the following table by the US Army Natick Soldier Center:

Table 3-11. High Mobility Trailers with Generator (JSTAR)

Nomenclature	*Max Weight (Pounds)*	*Sling Set*	*Link Count Front/Rear*	*Type of Aircraft*
Mission Trailer without Transit Cases	3,960	10K	10/3	CH-47
Support Trailer without Transit Cases	3,878	10K	10/3	CH-47

- **Materials.** The following materials are required to rig this load:
  - Sling set (10,000-pound capacity) with one additional apex fitting.
    - Additional chain length, part number 38850-00053-101, from a 10,000-pound capacity sling set (4 each).
    - Additional coupling link, part number 577-0615, from a 10,000-pound capacity sling set (4 each).
  - Tape, adhesive, pressure-sensitive, 2-inch wide roll.
  - Cord, nylon, Type III, 550-pound breaking strength.
  - Webbing, cotton, 1/4-inch, 80-pound breaking strength.
  - Felt sheet, cattle hair, Type IV, 1/2-inch or suitable substitute.
- **Personnel.** Two persons can prepare and rig this load in 15 minutes.
- **Procedures.** The following procedures apply to this load:
  - **Preparation.** Prepare the load using the following steps:
    - Engage the parking brake.
    - Secure safety chains and brake hoses to the top of the drawbar with Type III nylon cord.
    - Secure all lids, doors, and caps with tape or Type III nylon cord.
    - Remove transit cases which will interfere with the sling legs and store them in the shelter.
    - Install the rear stabilizer legs with the lower support section fully retracted.
    - Remove the lunette jack and secure in the trailer bed.
    - Secure the four lift rings on the trailer in the up position to a convenient point on the load with 1/4-inch cotton webbing.
    - Connect one additional chain length to each chain of the sling set with the coupling link.
  - **Rigging.** Rig the load according to the steps in Figure 3-11.
  - **Hookup.** The hookup teams stand in the bed of the trailer and on the drawbar. The static wand person discharges the static electricity with the static wand. The forward hookup person places apex fitting 1 onto the forward cargo hook. The aft hookup person places apex fitting 2 onto the aft cargo hook. The hookup team then carefully dismounts the vehicle and remains close to the load as the helicopter removes slack from the sling legs. When successful hookup is assured, the hookup team quickly exits the area underneath the helicopter to the designated rendezvous point.
  - **Derigging**. Derigging is the reverse of the preparation and rigging procedures.

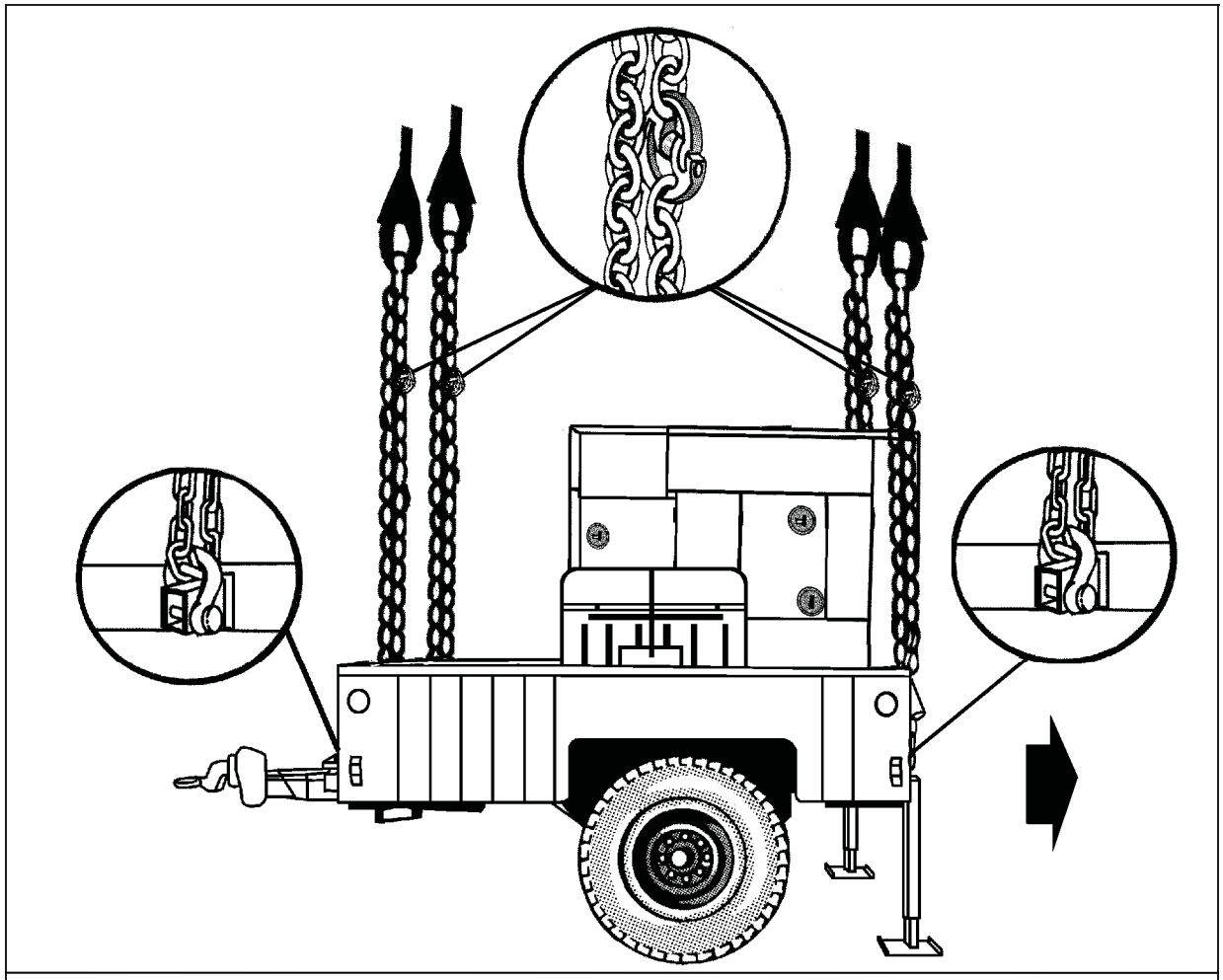

RIGGING STEPS

1. Connect 2 sling legs to apex fitting number 1. Position the apex fitting on top of the generator.

2. Loop the chain end of the sling legs through their respective lift provisions. Place the correct link from Table 3-11 in the grab hook.

3. Connect 2 sling legs to apex fitting number 2. Position the apex fitting on top of the generator.

4. Loop the chain end of the sling legs through their respective lift provisions. Place the correct link from Table 3-11 in the grab hook.

5. Secure all excess chain with tape or Type III nylon cord.

6. Pad the chain/sling where they contact the generator.

7. Cluster and tie (breakaway technique) the sling legs in each sling set together to prevent entanglement during hookup and lift-off.

Figure 3-11. High Mobility Trailers with Generator (JSTAR)

HIGH MOBILITY TRAILER-LIGHT (HMT), M1101 WITH AN/TSQ-198, TACTICAL TERMINAL CONTROL SYSTEM (TTCS)

3-13. The high mobility trailer-light, M1101 with AN/TSQ-198 tactical terminal control system is rigged for dual-point sling load using the following procedures:

- **Applicability.** The following item in Table 3-12 is certified for the helicopter(s) listed in the following table by the US Army Natick Soldier Center:

Table 3-12. High Mobility Trailer-Light (HMT), M1101 with AN/TSQ-198

Nomenclature	*Max Weight (Pounds)*	*Sling Set*	*Link Count Front/Rear*	*Type of Aircraft*
AN/TSQ-198 Tactical Terminal Control System	2,720	10K	20/3	CH-47

- **Materials.** The following materials are required to rig this load:
  - Sling set (10,000-pound capacity) with one additional apex fitting.
  - Tape, adhesive, pressure-sensitive, 2-inch wide roll.
  - Cord, nylon, Type III, 550-pound breaking strength.
  - Webbing, cotton, 1/4-inch, 80-pound breaking strength.
  - Felt sheet, cattle hair, Type IV, 1/2-inch or suitable substitute.
  - Strap, cargo, tie-down, CGU-1/B (as required).
- **Personnel.** Two persons can prepare and rig this load in 10 minutes.
- **Procedures.** The following procedures apply to this load:
  - **Preparation.** Prepare the load using the following steps:
    - Engage the parking brake.
    - Secure safety chains and brake hoses to the top of the drawbar with Type III nylon cord.
    - Secure all lids, doors, and caps with tape or Type III nylon cord.
    - Place additional cargo on the trailer bed and secure the cargo with CGU-1/B tiedown straps.
    - Install the rear stabilizer legs with the lower support section fully retracted.
    - Lower the front jack so the lunette is close to the ground.
    - Secure the four lift rings on the trailer in the up position to a convenient point on the load with 1/4-inch cotton webbing.
  - **Rigging.** Rig the load according to the steps in Figure 3-12.
  - **Hookup.** The hookup teams stand in the bed of the trailer and on the drawbar. The static wand person discharges the static electricity with the static wand. The forward hookup person places apex fitting 1 onto the forward cargo hook. The aft hookup person places apex fitting 2 onto the aft cargo hook. The hookup team then carefully dismounts the vehicle and remains close to the load as the helicopter removes slack from the sling legs. When successful hookup is assured, the hookup team quickly exits the area underneath the helicopter to the designated rendezvous point.
  - **Derigging**. Derigging is the reverse of the preparation and rigging procedures.

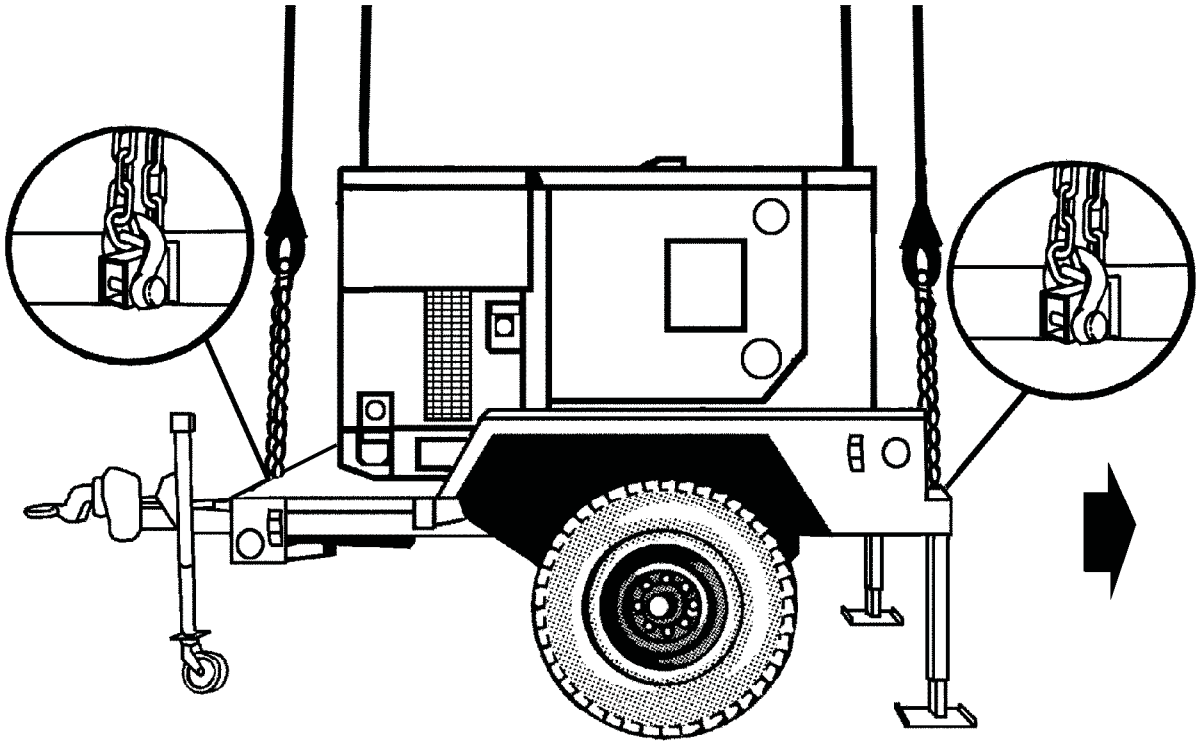

RIGGING STEPS

1. Connect 2 sling legs to apex fitting number 1. Position the apex fitting on top of the generator.
2. Loop the chain end of the sling legs through their respective lift provisions. Place the correct link from Table 3-12 in the grab hook.
3. Connect 2 sling legs to apex fitting number 2. Position the apex fitting on top of the generator.
4. Loop the chain end of the sling legs through their respective lift provisions. Place the correct link from Table 3-12 in the grab hook.
5. Secure all excess chain with tape or Type III nylon cord.
6. Pad the chain/sling where they contact the generator.
7. Cluster and tie (breakaway technique) the sling legs in each sling set together to prevent entanglement during hookup and lift-off.

Figure 3-12. High Mobility Trailer-Light (HMT), M1101 with AN/TSQ-198

SPECIAL OPERATIONS MEDIA SYSTEMS (SOMS B) ON COMMANDER'S CRASH-OUT-PACKAGE SYSTEM (COPS) TRAILER

3-14. The special operations media systems on commander's crash-out-package system trailer is rigged for dual-point sling load using the following procedures:

- **Applicability.** The following items in Table 3-13 are certified for the helicopter(s) listed in the following table by the US Army Natick Soldier Center:

Table 3-13. Special Operations Media Systems on COPS Trailer

Nomenclature	*Max Weight (Pounds)*	*Sling Set*	*Link Count Front/Rear*	*Type of Aircraft*
Environmental Control Unit (ECU) on COPS Trailer	4,080	10K	5/35	CH-47
Non- ECU on COPS Trailer	3,145	10K	5/35	CH-47

- **Materials.** The following materials are required to rig this load:
  - Sling set (10,000-pound capacity) with one additional apex fitting.
  - Tape, adhesive, pressure-sensitive, 2-inch wide roll.
  - Cord, nylon, Type III, 550-pound breaking strength.
  - Webbing, cotton, 1/4-inch, 80-pound breaking strength.
  - Felt sheet, cattle hair, Type IV, 1/2-inch or suitable substitute.
  - Strap, cargo, tie-down, CGU-1/B (as required).
- **Personnel.** Two persons can prepare and rig this load in 10 minutes.
- **Procedures.** The following procedures apply to this load:
  - **Preparation.** Prepare the load using the following steps:
    - Engage the parking brake.
    - Secure light cables, safety chains, and brake hoses to the top of the drawbar with tape or Type III nylon cord.
    - Secure all lids, doors, and caps with tape or Type III nylon cord.
    - Place additional cargo on the trailer bed and secure the cargo with CGU-1/B tiedown straps.
    - Install the rear stabilizer legs with the lower support section fully retracted.
    - Lower the front jack so the lunette is close to the ground.
  - **Rigging.** Rig the load according to the steps in Figure 3-13.
  - **Hookup.** The hookup teams stand in the bed of the trailer and on the drawbar. The static wand person discharges the static electricity with the static wand. The forward hookup person places apex fitting 1 onto the forward cargo hook. The aft hookup person places apex fitting 2 onto the aft cargo hook. The hookup team then carefully dismounts the vehicle and remains close to the load as the helicopter removes slack from the sling legs. When successful hookup is assured, the hookup team quickly exits the area underneath the helicopter to the designated rendezvous point.
  - **Derigging.** Derigging is the reverse of the preparation and rigging procedures.

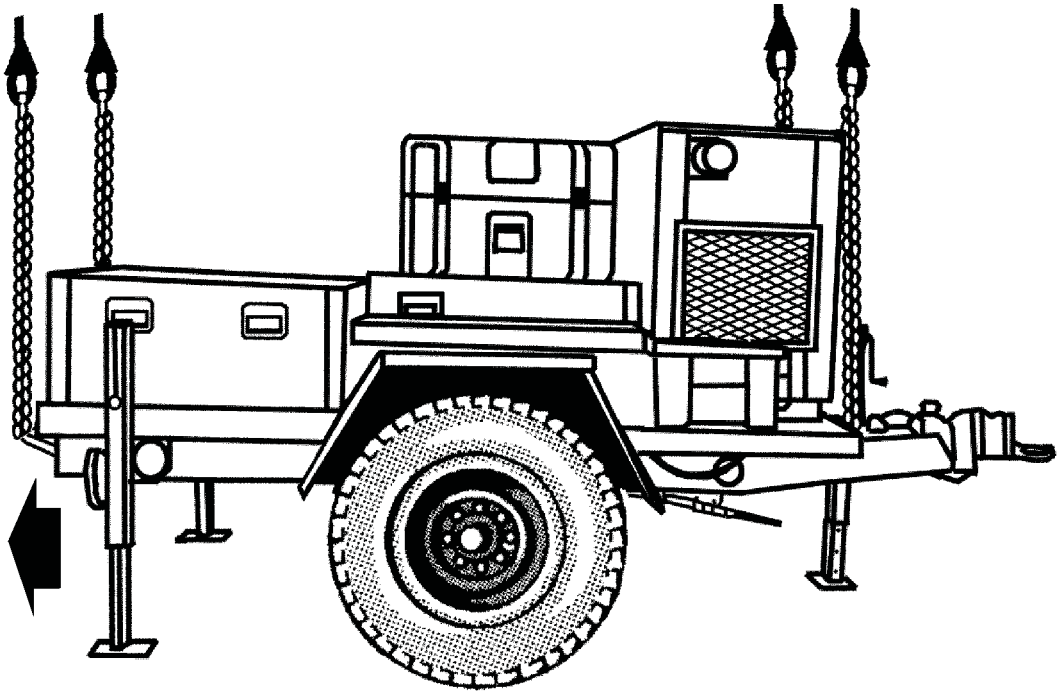

RIGGING STEPS

1. Connect 2 sling legs to apex fitting number 1. Position the apex fitting on top of the trailer.
2. Loop the chain end of the sling legs through their respective lift provisions. Place the correct link from Table 3-13 in the grab hook.
3. Connect 2 sling legs to apex fitting number 2. Position the apex fitting on top of the trailer.
4. Loop the chain end of the sling legs through their respective lift provisions. Place the correct link from Table 3-13 in the grab hook.
5. Secure all excess chain with tape or Type III nylon cord.
6. Pad the chain/sling where they contact the trailer or generator.
7. Cluster and tie (breakaway technique) the sling legs in each sling set together to prevent entanglement during hookup and lift-off.

Figure 3-13. Special Operations Media Systems on COPS Trailer

DEPLOYABLE PRINT PRODUCTION CENTER (DPPC) ON COPS TRAILER

3-15. The special operations media deployable print production center on COPS trailer is rigged for dual-point sling load using the following procedures:

- **Applicability.** The following item in Table 3-14 is certified for the helicopter(s) listed in the following table by the US Army Natick Soldier Center:

Table 3-14. Deployable Print Production Center on COPS Trailer

Nomenclature	*Max Weight (Pounds)*	*Sling Set*	*Link Count Front/Rear*	*Type of Aircraft*
Deployable Print Production Center on COPS Trailer	4,400	10K 15K	5/35	CH-47 CH-53

- **Materials.** The following materials are required to rig this load:
  - Sling set (10,000-pound capacity) with one additional apex fitting.

    OR
  - Sling set (15,000-pound capacity) (2 each).
  - Tape, adhesive, pressure-sensitive, 2-inch wide roll.
  - Cord, nylon, Type III, 550-pound breaking strength.
  - Webbing, cotton, 1/4-inch, 80-pound breaking strength.
  - Felt sheet, cattle hair, Type IV, 1/2-inch or suitable substitute.
- **Personnel.** Two persons can prepare and rig this load in 10 minutes.
- **Procedures.** The following procedures apply to this load:
  - **Preparation.** Prepare the load using the following steps:
    - Engage the parking brake.
    - Secure light cables, safety chains, and brake hoses to the top of the drawbar with tape or Type III nylon cord.
    - Place additional cargo on the trailer bed and secure the cargo with CGU-1/B tiedown straps.
    - Install the rear stabilizer legs with the lower support section fully retracted.
    - Lower the front jack so the lunette is close to the ground.
  - **Rigging.** Rig the load according to the steps in Figure 3-14.
  - **Hookup.** The hookup teams stand in the bed of the trailer and on the drawbar. The static wand person discharges the static electricity with the static wand. The forward hookup person places apex fitting 2 onto the forward cargo hook. The aft hookup person places apex fitting 1 onto the aft cargo hook. The hookup team then carefully dismounts the vehicle and remains close to the load as the helicopter removes slack from the sling legs. When successful hookup is assured, the hookup team quickly exits the area underneath the helicopter to the designated rendezvous point.
  - **Derigging.** Derigging is the reverse of the preparation and rigging procedures.

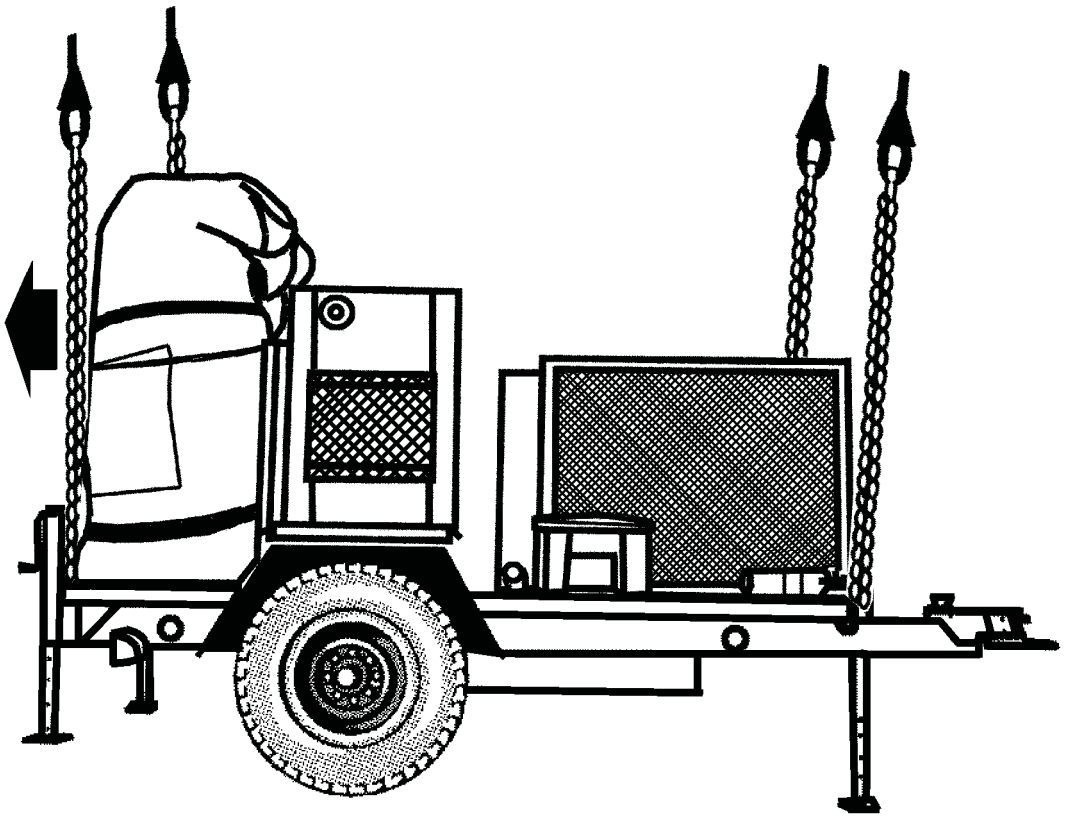

RIGGING STEPS

1. Connect 2 sling legs to apex fitting number 1. Position the apex fitting on top of the trailer.

2. Loop the chain end of the sling legs through their respective lift provisions located on the outer ends of the front bumper (generator end). Place the correct link from Table 3-14 in the grab hook.

3. Connect 2 sling legs to apex fitting number 2. Position the apex fitting on top of the trailer.

4. Loop the chain end of the sling legs through their respective lift provisions located on the outer ends of the rear bumper. Place the correct link from Table 3-14 in the grab hook. Secure all excess chain with tape or Type III nylon cord.

5. Pad the chain/sling where they contact the trailer or generator.

6. Cluster and tie (breakaway technique) the sling legs in each sling set together to prevent entanglement during hookup and lift-off.

Figure 3-14. Deployable Print Production Center on COPS Trailer

M1112 400 GALLON WATER TRAILER

3-16. The M1112 400 gallon water trailer is rigged for dual-point sling load using the following procedures:

- **Applicability.** The following item in Table 3-15 is certified for the helicopter(s) listed in the following table by the US Army Natick Soldier Center:

Table 3-15. M1112 400 Gallon Water Trailer

Nomenclature	*Max Weight (Pounds)*	*Sling Set*	*Link Count Front/Rear*	*Type of Aircraft*
M1112 400 Gallon Water Trailer (Empty)	3,860	10K	20/3	CH-47

- **Materials.** The following materials are required to rig this load:
  - Sling set (10,000-pound capacity) with one additional apex fitting.
  - Tape, adhesive, pressure-sensitive, 2-inch wide roll.
  - Cord, nylon, Type III, 550-pound breaking strength.
  - Webbing, cotton, 1/4-inch, 80-pound breaking strength.
- **Personnel.** Two persons can prepare and rig this load in 10 minutes.
- **Procedures.** The following procedures apply to this load:
  - **Preparation.** Prepare the load using the following steps:
    - Secure all loose chains, hoses, and cables to the trailer drawbar with tape or Type III nylon cord.
    - Ensure the tongue wheel is in the down and locked position.
    - Close and secure the tank lid.
    - Engage the parking brake.
  - **Rigging.** Rig the load according to the steps in Figure 3-15.
  - **Hookup.** The hookup teams stand on the trailer fenders or on the front of the trailer. The static wand person discharges the static electricity with the static wand. The forward hookup person places apex fitting 1 onto the forward cargo hook. The aft hookup person places apex fitting 2 onto the aft cargo hook. The hookup team then carefully dismounts the trailer and remains close to the load as the helicopter removes slack from the sling legs. When successful hookup is assured, the hookup team quickly exits the area underneath the helicopter to the designated rendezvous point.
  - **Derigging.** Derigging is the reverse of the preparation and rigging procedures.

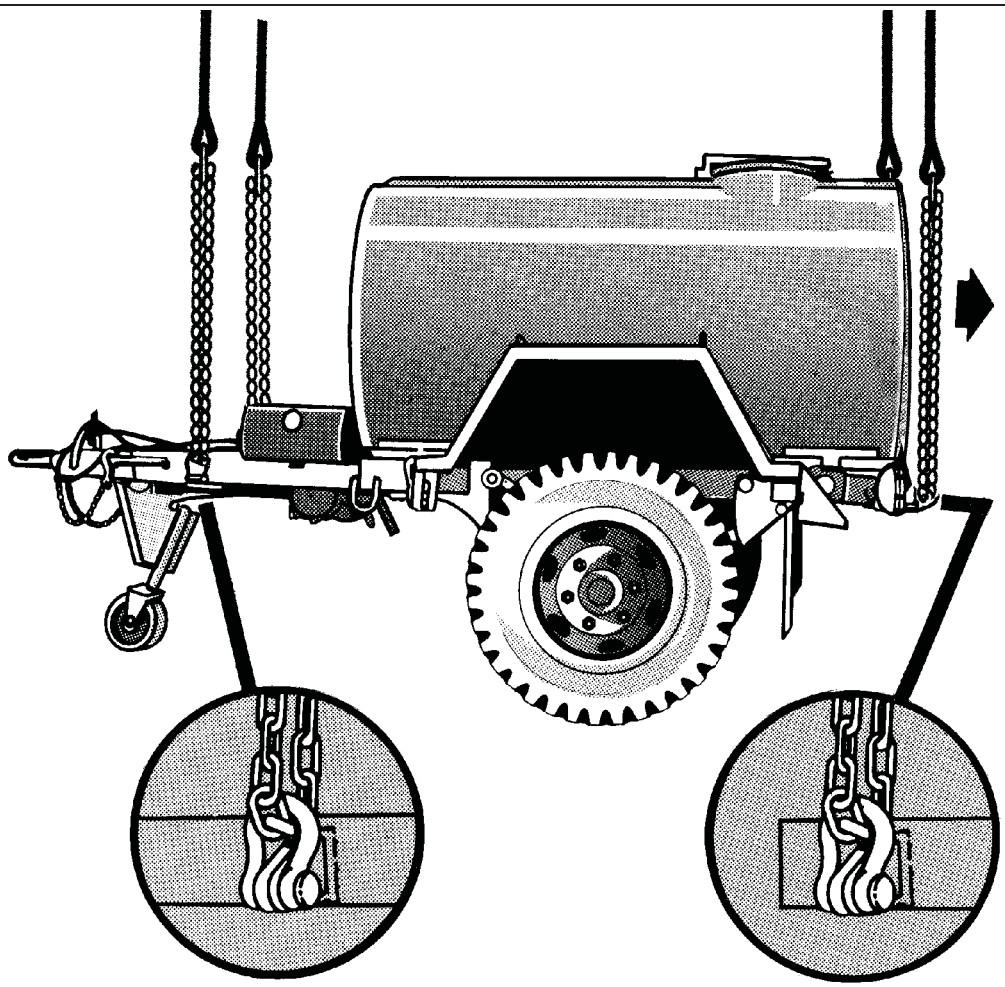

RIGGING STEPS

1. Connect 2 sling legs to apex fitting number 1. Position the apex fitting on top of the forward end (lunette end) of the trailer.

2. Loop the chain end of the sling legs through their respective lift provisions located in the drawbar of the trailer. Place the correct link from Table 3-15 in the grab hook.

3. Connect 2 sling legs to apex fitting number 2. Position the apex fitting on top of the aft end of the trailer.

4. Loop the chain end of the sling legs through their respective lift provisions located on the rear bumper of the trailer. Place the correct link from Table 3-15 in the grab hook.

5. Secure all excess chain with tape or Type III nylon cord.

6. Cluster and tie (breakaway technique) the sling legs in each sling set together to prevent entanglement during hookup and lift-off.

Figure 3-15. M1112, 400 Gallon Water Trailer

M105A3 TRAILER

3-17. The M105A3 trailer is rigged for dual-point sling load using the following procedures:

- **Applicability.** The following item in Table 3-16 is certified for the helicopter(s) listed in the following table by the US Army Natick Soldier Center:

Table 3-16. M105A3 Trailer

Nomenclature	*Max Weight (Pounds)*	*Sling Set*	*Link Count Front/Rear*	*Type of Aircraft*
M105A3 Trailer (Empty)	2,600	10K	40/3	CH-47
M105A3 Trailer (Loaded)	5,580	10K	40/3	CH-47

- **Materials.** The following materials are required to rig this load:
  - Sling set (10,000-pound capacity) with one additional apex fitting.
  - Tape, adhesive, pressure-sensitive, 2-inch wide roll.
  - Cord, nylon, Type III, 550-pound breaking strength.
  - Webbing, cotton, 1/4-inch, 80-pound breaking strength.
- **Personnel.** Two persons can prepare and rig this load in 10 minutes.
- **Procedures.** The following procedures apply to this load:
  - **Preparation.** Prepare the load using the following steps:
    - Raise the trailer's jack stand so the pintle is on the ground.
    - Secure all loose chains, hoses, and cables to the trailer drawbar with tape or Type III nylon cord.
    - Engage the parking brake.
  - **Rigging.** Rig the load according to the steps in Figure 3-16.
  - **Hookup.** The hookup teams stand in the bed of the trailer. The static wand person discharges the static electricity with the static wand. The forward hookup person places apex fitting 1 onto the forward cargo hook. The aft hookup person places apex fitting 2 onto the aft cargo hook. The hookup team then carefully dismounts the trailer and remains close to the load as the helicopter removes slack from the sling legs. When successful hookup is assured, the hookup team quickly exits the area underneath the helicopter to the designated rendezvous point.
  - **Derigging.** Derigging is the reverse of the preparation and rigging procedures.

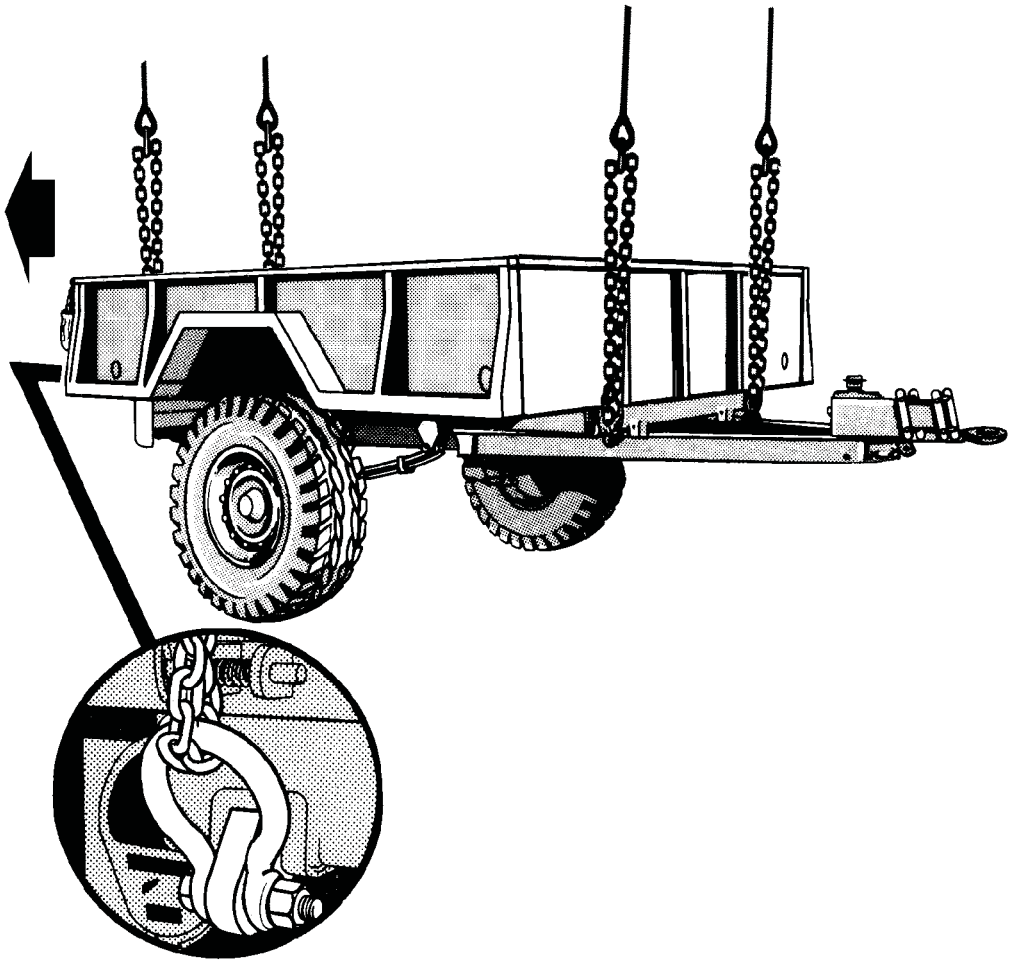

RIGGING STEPS

1. Connect 2 sling legs to apex fitting number 1. Position the apex fitting on top of the forward end (lunette end) of the trailer.

2. Loop the chain end of the sling legs through their respective lift provisions located in the front of the trailer. Place the correct link from Table 3-16 in the grab hook.

3. Connect 2 sling legs to apex fitting number 2. Position the apex fitting on top of the aft end of the trailer.

4. Loop the chain end of the sling legs through their respective lift provisions located on the aft end of the trailer. Place the correct link from Table 3-16 in the grab hook.

5. Secure all excess chain with tape or Type III nylon cord.

6. Cluster and tie (breakaway technique) the sling legs in each sling set together to prevent entanglement during hookup and lift-off.

Figure 3-16. M105A3 Trailer

M1082 LIGHT MEDIUM TACTICAL VEHICLE (LMTV) AND M1095 MEDIUM TACTICAL VEHICLE (MTV) TRAILERS

3-18. The M1082 light medium tactical vehicle and M1095 medium tactical vehicle trailers are rigged for dual-point sling load using the following procedures:

- **Applicability.** The following items in Table 3-17 are certified for the helicopter(s) listed in the following table by the US Army Natick Soldier Center:

Table 3-17. M1082 Light Medium Tactical Vehicle and M1095 Medium Tactical Vehicle Trailers

Nomenclature	*Max Weight (Pounds)*	*Sling Set*	*Link Count Front/Rear*	*Type of Aircraft*
M1082 LMTV Trailer	11,510	25K	10/3	CH-47
M1095 MTV Trailer	15,780	25K	20/3	CH-47

- **Materials.** The following materials are required to rig this load:
  - Sling set (25,000-pound capacity) with one additional apex fitting.
  - Tape, adhesive, pressure-sensitive, 2-inch wide roll.
  - Cord, nylon, Type III, 550-pound breaking strength.
  - Webbing, cotton, 1/4-inch, 80-pound breaking strength.
- **Personnel.** Two persons can prepare and rig this load in 10 minutes.
- **Procedures.** The following procedures apply to this load:
  - **Preparation.** Prepare the load using the following steps:
    - Position the trailer's jack stand in the down position so the trailer sets level.
    - Secure all loose chains, hoses, and cables to the trailer drawbar with tape or Type III nylon cord.
    - Engage the parking brake.
    - Extend the lift provision bars to the widest position and lock into place with the locking pins. Secure the locking pins in place with tape.

Note: Ensure the lift eyes on the lift provision bars are perpendicular to the ground.

    - Remove the side and end panels and stow in the storage boxes under the bed of the trailer. Secure the storage latches with tape.
  - **Rigging.** Rig the load according to the steps in Figure 3-17.
  - **Hookup.** The hookup teams stand in the bed of the trailer. The static wand person discharges the static electricity with the static wand. The forward hookup person places apex fitting 1 onto the forward cargo hook. The aft hookup person places apex fitting 2 onto the aft cargo hook. The hookup team then carefully dismounts the trailer and remains close to the load as the helicopter removes slack from the sling legs. When successful hookup is assured, the hookup team quickly exits the area underneath the helicopter to the designated rendezvous point.
  - **Derigging.** Derigging is the reverse of the preparation and rigging procedures.

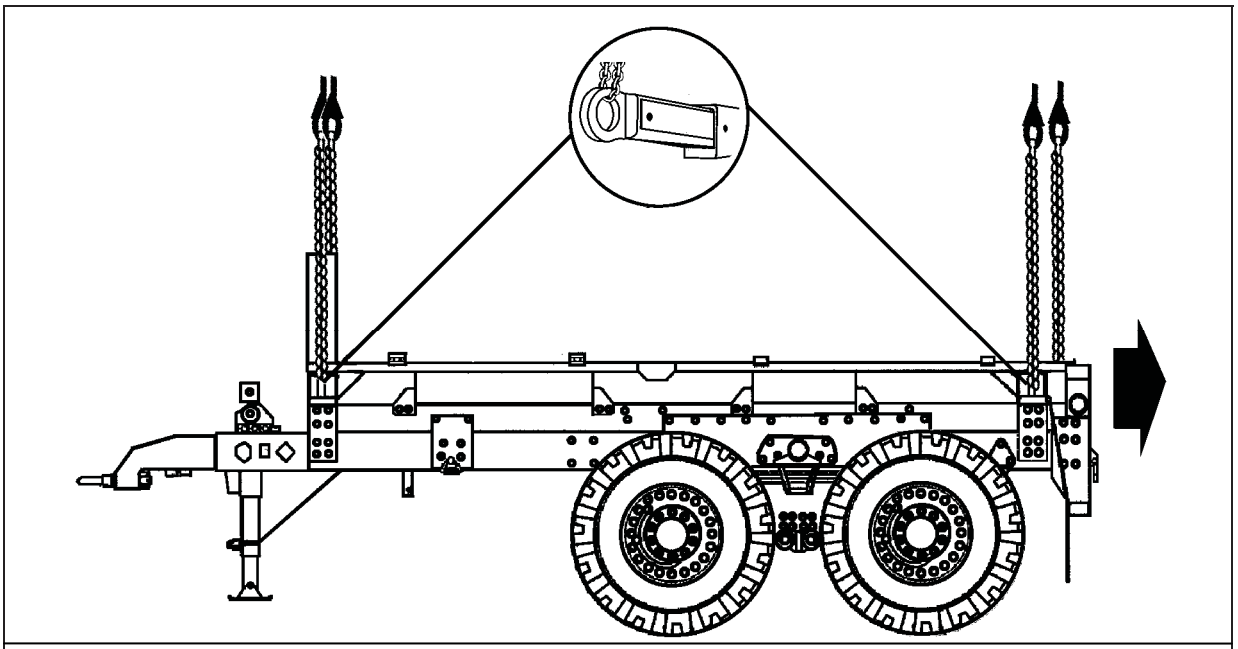

RIGGING STEPS

1. Connect 2 sling legs to apex fitting number 1. Position the apex fitting on top of the forward end (lunette end) of the trailer.

2. Loop the chain end of the sling legs through their respective lift provision bar located on the front end (lunette end) of the trailer. Place the correct link from Table 3-17 in the grab hook.

3. Connect 2 sling legs to apex fitting number 2. Position the apex fitting on top of the aft end of the trailer.

4. Loop the chain end of the sling legs through their respective lift provision bar located on the aft end of the trailer. Place the correct link from Table 3-17 in the grab hook.

5. Secure all excess chain with tape or Type III nylon cord.

6. Cluster and tie or tape (breakaway technique) the sling legs in each sling set together to prevent entanglement during hookup and lift-off.

Figure 3-17. M1082 Light Medium Tactical Vehicle and M1095 Medium Tactical Vehicle Trailers

ASSAULT COMMAND POST WITH HIGH MOBILITY WHEEL SET

3-19. The assault command post with high mobility wheel set is rigged for dual-point sling load using the following procedures:

- **Applicability.** The following items in Table 3-18 are certified for the helicopter(s) listed in the following table by the US Army Natick Soldier Center:

Table 3-18. Assault Command Post with High Mobility Wheel Set

Nomenclature	*Max Weight (Pounds)*	*Sling Set*	*Link Count Front/Rear*	*Type of Aircraft*
Assault Command Post (ACP) Housed in Expandable Light Airmobile Shelter (ELAMS), with High Mobility Wheel Set	13,240	25K	ECU is Front 20/3	CH-47
Upgraded Assault Command Post (ACP) Housed in Expandable Light Airmobile Shelter (ELAMS), with High Mobility Wheel Set	14,600	25K	ECU is Front 20/3	CH-47

- **Materials.** The following materials are required to rig this load:
  - Sling set (25,000-pound capacity) with one additional apex fitting.
  - Tape, adhesive, pressure-sensitive, 2-inch wide roll.
  - Cord, nylon, Type III, 550-pound breaking strength.
  - Webbing, cotton, 1/4-inch, 80-pound breaking strength.
- **Personnel.** Two persons can prepare and rig this load in 15 minutes.
- **Procedures.** The following procedures apply to this load:
  - **Preparation.** Prepare the load using the following steps:
    - Ensure manufacturer approved tiedown assemblies (2 each) are in place between the shelter and each wheel set.
    - Remove all antennas and secure inside the shelter.
    - Secure all lids, doors, and caps with tape or Type III nylon cord.
    - Secure all loose equipment inside the shelter with tape, lashings, or Type III nylon cord.
    - Secure the tow bar in the up position with Type III nylon cord.
  - **Rigging.** Rig the load according to the steps in Figure 3-18.
  - **Hookup.** The hookup teams stand on the roof of the shelter. The static wand person discharges the static electricity with the static wand. The forward hookup person places apex fitting 1 onto the forward cargo hook. The aft hookup person places apex fitting 2 onto the aft cargo hook. The hookup team then carefully dismounts the vehicle and remains close to the load as the helicopter removes slack from the sling legs. When successful hookup is assured, the hookup team quickly exits the area underneath the helicopter to the designated rendezvous point.
  - **Derigging.** Derigging is the reverse of the preparation and rigging procedures.

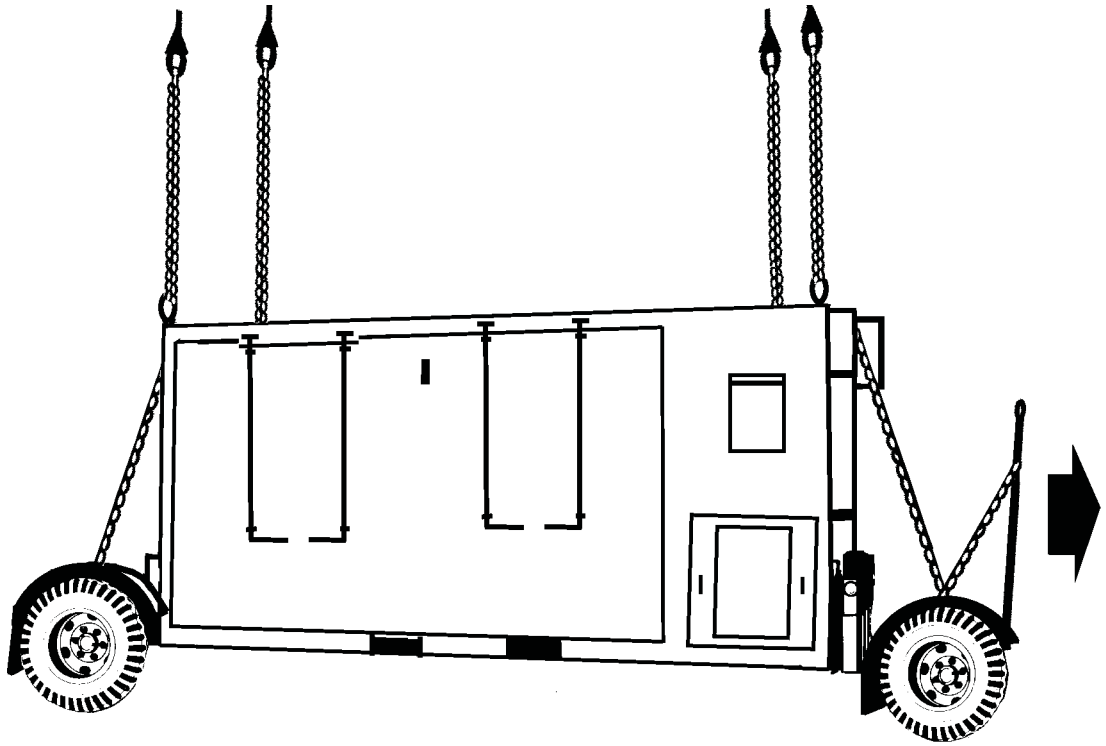

RIGGING STEPS

1. Connect 2 sling legs to apex fitting number 1. Position the apex fitting on the roof of the shelter.

2. Loop the chain end of the sling legs through their respective lift provisions located on the top front corners of the shelter. Place the correct link from Table 3-18 in the grab hook.

3. Connect 2 sling legs to apex fitting number 2. Position the apex fitting on the roof of the shelter.

4. Loop the chain end of the sling legs through their respective lift provision bar located on the top rear corners of the shelter. Place the correct link from Table 3-18 in the grab hook.

5. Secure all excess chain with tape or Type III nylon cord.

6. Cluster and tie (breakaway technique) the sling legs in each sling set together to prevent entanglement during hookup and lift-off.

Figure 3-18. Assault Command Post with High Mobility Wheel Set

CONTAINERIZED KITCHEN MOUNTED ON THE CONTAINERIZED KITCHEN TRAILER

3-20. The containerized kitchen mounted on the containerized kitchen trailer is rigged for dual-point sling load using the following procedures:

- **Applicability.** The following item in Table 3-19 is certified for the helicopter(s) listed in the following table by the US Army Natick Soldier Center:

Table 3-19. Containerized Kitchen Mounted on the Containerized Kitchen Trailer

Nomenclature	*Max Range (Pounds)*	*Sling Set*	*Link Count Front/Rear*	*Type of Aircraft*
Containerized Kitchen on Containerized Kitchen Trailer	18,900-20,840	25K	3/50	CH-47

- **Materials.** The following materials are required to rig this load:
  - Sling set (25,000-pound capacity) with one additional apex fitting.
    - Additional chain length, part number 38850-00053-102, from a 25,000-pound capacity sling set (8 each).
    - Additional coupling link, part number 664241, from a 25,000-pound capacity sling set.
  - Tape, adhesive, pressure-sensitive, 2-inch wide roll.
  - Cord, nylon, Type III, 550-pound breaking strength.
  - Webbing, cotton, 1/4-inch, 80-pound breaking strength.
- **Personnel.** Two persons can prepare and rig this load in 10 minutes.
- **Procedures.** The following procedures apply to this load:
  - **Preparation.** Prepare the load using the following steps:
    - Secure all loose chains, hoses, and cables to the trailer drawbar with tape or Type III nylon cord.
    - Secure all lids, doors, and caps with tape or Type III nylon cord.
    - Ensure the front stabilizer legs are extended and in the down position and the rear stabilizer legs are in the up and stowed position.
    - Lower the tongue support leg so the lunette is lower than the rear of the trailer.
  - **Rigging.** Rig the load according to the steps in Figure 3-19.
  - **Hookup.** The hookup teams stand on the trailer roof. The static wand person discharges the static electricity with the static wand. The forward hookup person places apex fitting 1 onto the forward cargo hook. The aft hookup person places apex fitting 2 onto the aft cargo hook. The hookup team then carefully dismounts the trailer and remains close to the load as the helicopter removes slack from the sling legs. When successful hookup is assured, the hookup team quickly exits the area underneath the helicopter to the designated rendezvous point.
  - **Derigging.** Derigging is the reverse of the preparation and rigging procedures.

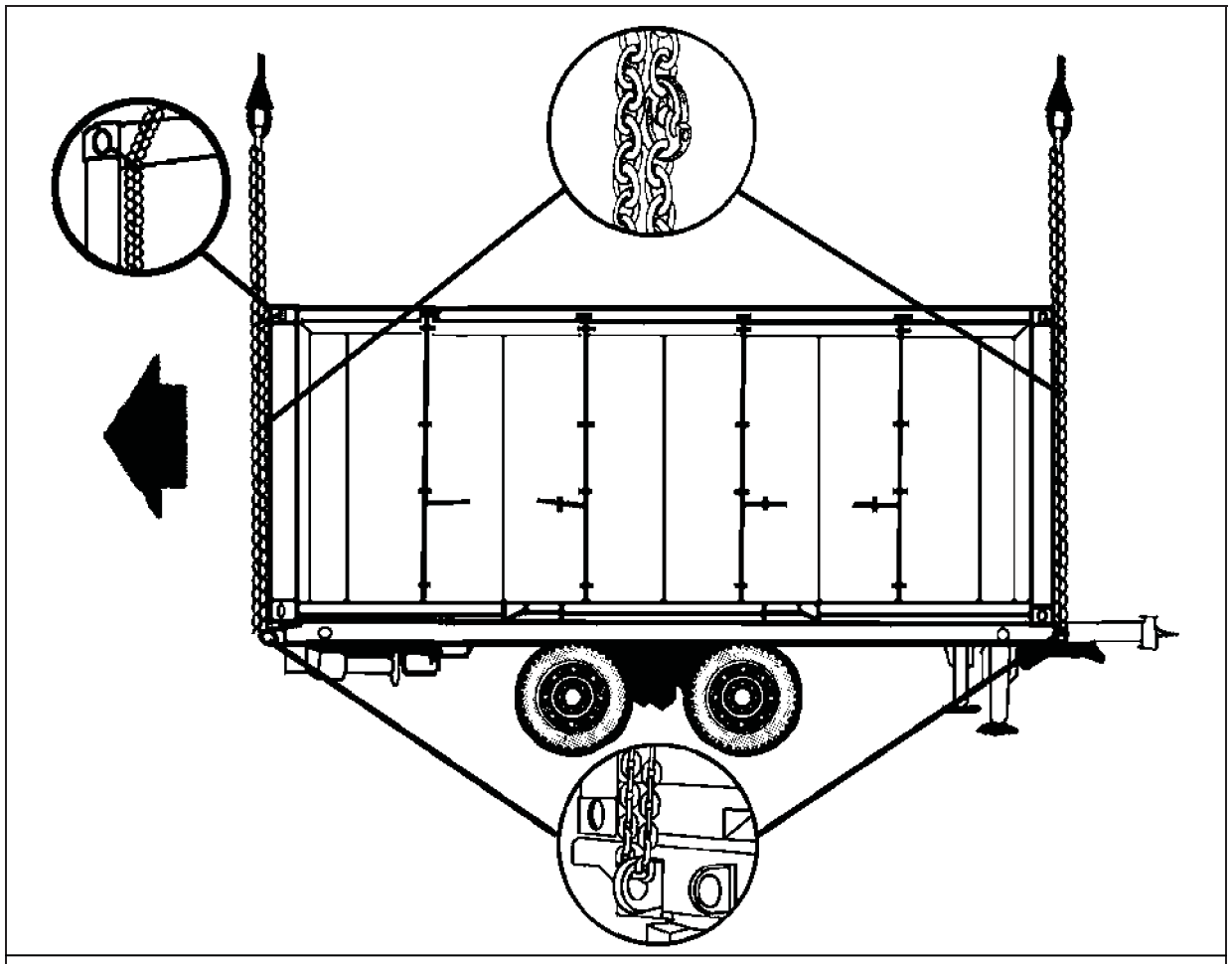

RIGGING STEPS

1. Connect 2 sling legs to apex fitting number 1. Attach two extra chain lengths to each existing chain on each sling leg using coupling links (for 25,000-pound capacity sling sets only). Position the apex fitting on top of the aft end of the trailer.

2. Loop the chain end of the sling legs through their respective lift provisions located on the frame of the trailer. Place the correct link from Table 3-19 in the grab hook.

3. Connect 2 sling legs to apex fitting number 2. Attach two extra chain lengths to each existing chain on each sling leg using coupling links (for 25,000-pound capacity sling sets only). Position the apex fitting on top of the front (lunette end) of the trailer.

4. Loop the chain end of the sling legs through their respective lift provisions located on the frame of the trailer. Place the correct link from Table 3-19 in the grab hook.

5. Secure all excess chain with tape or Type III nylon cord.

6. Cluster and tie (breakaway technique) the sling legs in each sling set together to prevent entanglement during hookup and lift-off. Safety tie each chain to the respective ISO provision with Type I, 1/4-inch cotton webbing.

Figure 3-19. Containerized Kitchen Mounted on the Containerized Kitchen Trailer

M31 EXPEDITIONARY ARRESTING GEAR SYSTEM (EAGS)

3-21. The M31 expeditionary arresting gear system is rigged for dual-point sling load using the following procedures:

- **Applicability.** The following item in Table 3-20 is certified for the helicopter(s) listed in the following table by the US Army Natick Soldier Center:

Table 3-20. M31 Expeditionary Arresting Gear System

Nomenclature	*Max Weight (Pounds)*	*Sling Set*	*Link Count Front/Rear*	*Type of Aircraft*
M31 Expeditionary Arresting Gear System	17,466	40K	Right 3/21 Left 5/22	CH-53

Note: The front of the EAGS is the end with the large towbar.

- **Materials.** The following materials are required to rig this load:
  - Sling set (40,000-pound capacity) with one additional apex fitting.
    - Additional chain length, part number 607050, from a 40,000-pound capacity sling set (4 each).
    - Additional coupling link, NSN 4010-01-081-5114, from a 40,000-pound sling set (4 each).
  - Tape, adhesive, pressure-sensitive, 2-inch wide roll.
  - Cord, nylon, Type III, 550-pound breaking strength.
  - Webbing, cotton, 1/4-inch, 80-pound breaking strength.
  - Strap, tiedown, 5,000-pound capacity (included with system) (as required).
- **Personnel.** Two persons can prepare and rig this load in 15 minutes.
- **Procedures.** The following procedures apply to this load:

Note: The EAGS must be in the transport mode.

  - **Preparation.** Prepare the load using the following steps:
    - Secure the drawbar in the up position with the included tie rod.
    - Secure the safety chains and brake cables to the drawbar with Type III nylon cord.
    - Secure all lids, doors, and caps with tape or Type III nylon cord.
    - Ensure the stabilizing legs are retracted and stowed.
    - Secure all stowed equipment with the provided tiedown straps.
    - Connect one additional chain length to each chain on each sling set with a coupling link.
  - **Rigging.** Rig the load according to the steps in Figure 3-20.
  - **Hookup.** The hookup teams stand on top of the trailer. The static wand person discharges the static electricity with the static wand. The forward hookup person places apex fitting 1 onto the forward cargo hook. The aft hookup person places apex fitting 2 onto the aft cargo hook. The hookup team then carefully dismounts the trailer and remains close to the load as the helicopter removes slack from the sling legs. When successful hookup is assured, the hookup team quickly exits the area underneath the helicopter to the designated rendezvous point.
  - **Derigging.** Derigging is the reverse of the preparation and rigging procedures.

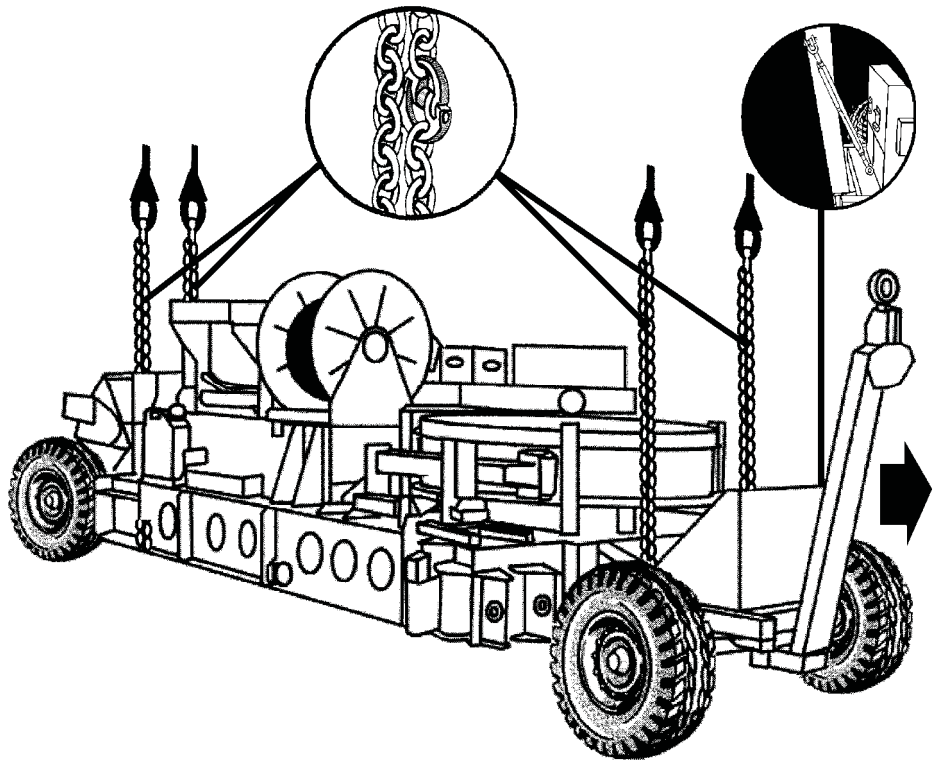

RIGGING STEPS

1. Connect 2 sling legs to apex fitting number 1. Position the apex fitting on top of the forward end (tow bar end) of the trailer.

2. Loop the chain end of the sling legs through their respective lift provisions located on the front end (tow bar end) of the trailer. Place the correct link from Table 3-20 in the grab hook. Tape the slings to the radiator.

3. Connect 2 sling legs to apex fitting number 2. Position the apex fitting on top of the aft end of the trailer.

4. Loop the chain end of the sling legs through their respective lift provisions located on the aft end of the trailer. Place the correct link from Table 3-20 in the grab hook.

5. Secure all excess chain with tape or Type III nylon cord.

6. Cluster and tie (breakaway technique) the sling legs in each sling set together on top of the spindle to prevent entanglement during hookup and lift-off.

Figure 3-20. M31 Expeditionary Arresting Gear System

STANDARD AUTOMOTIVE TOOLS SET (SATS) TRAILER

3-22. The standard automotive tools set trailer is rigged for dual-point sling load using the following procedures:

- **Applicability.** The following item in Table 3-21 is certified for the helicopter(s) listed in the following table by the US Army Natick Soldier Center:

Table 3-21. Standard Automotive Tools Set Trailer

Nomenclature	*Max Weight (Pounds)*	*Sling Set*	*Link Count Front/Rear*	*Type of Aircraft*
Standard Automotive Tools Set Trailer	6,580	10K	3/50	CH-47

- **Materials.** The following materials are required to rig this load:
  - Sling set (10,000-pound capacity) with one additional apex fitting.
  - Tape, adhesive, pressure-sensitive, 2-inch wide roll.
  - Cord, nylon, Type III, 550-pound breaking strength.
  - Webbing, cotton, 1/4-inch, 80-pound breaking strength.
- **Personnel.** Two persons can prepare and rig this load in 10 minutes.
- **Procedures.** The following procedures apply to this load:
  - **Preparation.** Prepare the load using the following steps:
    - Secure all loose chains, hoses, and cables to the trailer drawbar with tape or Type III nylon cord.
    - Ensure the front stabilizer legs are extended and in the down position and the rear stabilizer legs are in the up and stowed position.
    - Lower the tongue support leg so the lunette is lower than the rear of the trailer.
    - Ensure the ramp is stowed and secured.
  - **Rigging.** Rig the load according to the steps in Figure 3-21.
  - **Hookup.** The hookup teams stand in the bed of the trailer. The static wand person discharges the static electricity with the static wand. The forward hookup person places apex fitting 1 onto the forward cargo hook. The aft hookup person places apex fitting 2 onto the aft cargo hook. The hookup team then carefully dismounts the trailer and remains close to the load as the helicopter removes slack from the sling legs. When successful hookup is assured, the hookup team quickly exits the area underneath the helicopter to the designated rendezvous point.
  - **Derigging.** Derigging is the reverse of the preparation and rigging procedures.

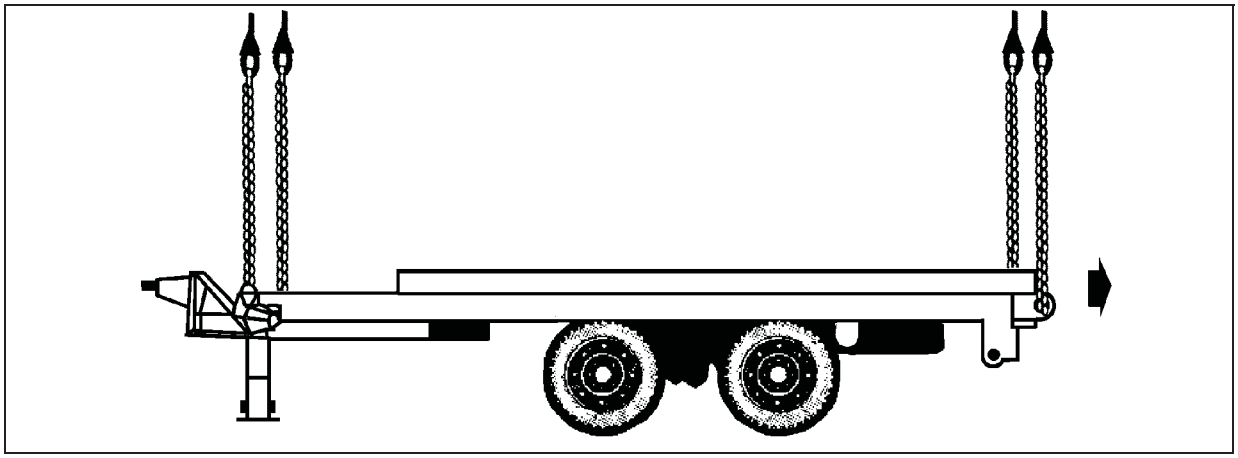

Figure 3-21. Standard Automotive Tools Set Trailer

RIGGING STEPS
1. Connect 2 sling legs to apex fitting number 1. Position the apex fitting on the bed of the trailer. 2. Loop the chain end of the sling legs through their respective lift provisions located on the front corners of the trailer. Place the correct link from Table 3-21 in the grab hook. 3. Connect 2 sling legs to apex fitting number 2. Position the apex fitting on the bed of the trailer. 4. Loop the chain end of the sling legs through their respective lift provisions located on the rear corners of the trailer. Place the correct link from Table 3-21 in the grab hook. 5. Secure all excess chain with tape or Type III nylon cord. 6. Cluster and tie (breakaway technique) the sling legs in each sling set together to prevent entanglement during hookup and lift-off.

Figure 3-21. Standard Automotive Tools Set Trailer (Continued)

SMALL EMPLACEMENT EXCAVATOR (SEE) TRANSPORTER

3-23. The small emplacement excavator transporter is rigged for dual-point sling load using the following procedures:

- **Applicability.** The following item in Table 3-22 is certified for the helicopter(s) listed in the following table by the US Army Natick Soldier Center:

Table 3-22. Small Emplacement Excavator Transporter

Nomenclature	*Max Weight (Pounds)*	*Sling Set*	*Link Count Front/Rear*	*Type of Aircraft*
Trailer, Two Axle, 20,000-Pound Capacity, SEE Transporter	10,880	15K	30/3	CH-53

- **Materials.** The following materials are required to rig this load:
  - Sling set (15,000-pound capacity) with one additional web ring.
  - Tape, adhesive, pressure-sensitive, 2-inch wide roll.
  - Cord, nylon, Type III, 550-pound breaking strength.
  - Webbing, cotton, 1/4-inch, 80-pound breaking strength.
  - Strap, cargo, tiedown, CGU-1/B (as required).
- **Personnel.** Two persons can prepare and rig this load in 15 minutes.
- **Procedures.** The following procedures apply to this load:
  - **Preparation.** Prepare the load using the following steps:
    - Position the trailer with the rear axle facing the direction of flight.
    - Secure all loose chains, hoses, and cables to the trailer drawbar with tape or Type III nylon cord.
    - Ensure the front stabilizer legs are extended and in the down position.
    - Secure the ramps and equipment on the trailer bed with chains, tiedown straps, lashings or Type III nylon cord.
    - Ensure the spare tire is installed and secured correctly.
    - Rotate the mud flaps up into the stowed position.

CAUTION

Ensure the cargo and equipment on the trailer bed does not interfere with the routing of the sling legs.

- **Rigging.** Rig the load according to the steps in Figure 3-22.
- **Hookup.** The hookup teams stand in the bed of the trailer. The static wand person discharges the static electricity with the static wand. The forward hookup person places apex fitting 1 onto the forward cargo hook. The aft hookup person places apex fitting 2 onto the aft cargo hook. The hookup team then carefully dismounts the trailer and remains close to the load as the helicopter removes slack from the sling legs. When successful hookup is assured, the hookup team quickly exits the area underneath the helicopter to the designated rendezvous point.
- **Derigging.** Derigging is the reverse of the preparation and rigging procedures.

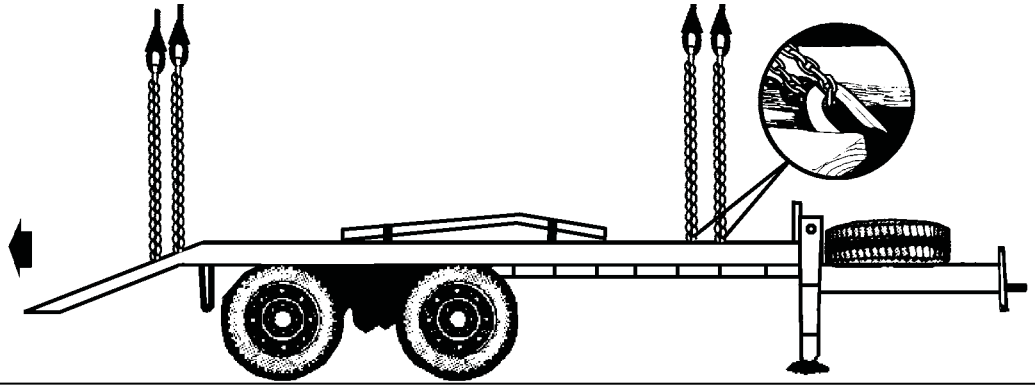

RIGGING STEPS

1. Connect 2 sling legs to apex fitting number 1. Position the apex fitting on the bed of the trailer.
2. Loop the chain end of the sling legs through their respective lift provisions located on the front (lunette end) of the trailer bed. Place the correct link from Table 3-22 in the grab hook.
3. Connect 2 sling legs to apex fitting number 2. Position the apex fitting on the bed of the trailer.
4. Loop the chain end of the sling legs through their respective lift provisions located on the ramp of the trailer. Place the correct link from Table 3-22 in the grab hook.
5. Secure all excess chain with tape or Type III nylon cord.
6. Cluster and tie (breakaway technique) the sling legs in each sling set together to prevent entanglement during hookup and lift-off.

Figure 3-22. Small Emplacement Excavator Transporter

STANDARD AUTOMOTIVE TOOLS SET (SATS) MOUNTED ON SATS TRAILER

3-24. The standard automotive tools set trailer is rigged for dual-point sling load using the following procedures:

- **Applicability.** The following items in Table 3-23 are certified for the helicopter(s) listed in the following table by the US Army Natick Soldier Center:

Table 3-23. Standard Automotive Tools Set Mounted on SATS Trailer

Nomenclature	*Max Weight (Pounds)*	*Sling Set*	*Link Count Front/Rear*	*Type of Aircraft*
Standard Automotive Tools Set with Core Tool Set	17,340	25K	5/30	CH-47
Standard Automotive Tools Set with Core and Mod 1 Tool Set	19,240	25K	5/30	CH-47
Standard Automotive Tools Set with Core, Mod 1, and Mod 2 Tool Sets	19,968	25K	5/30	CH-47

- **Materials.** The following materials are required to rig this load:
  - Sling set (25,000-pound capacity) with one additional apex fitting.
    - Additional chain length, part number 38850-00053-102, from a 25,000-pound capacity sling set (8 each).
    - Additional coupling link, part number 664241, from a 25,000-pound capacity sling set.
  - Tape, adhesive, pressure-sensitive, 2-inch wide roll.
  - Cord, nylon, Type III, 550-pound breaking strength.
  - Webbing, cotton, 1/4-inch, 80-pound breaking strength.
- **Personnel.** Two persons can prepare and rig this load in 10 minutes.
- **Procedures.** The following procedures apply to this load:
  - **Preparation.** Prepare the load using the following steps:
    - Secure all loose chains, hoses, and cables to the trailer drawbar with tape or Type III nylon cord.
    - Secure all loose equipment inside the shelter with tape, Type III nylon cord, and tiedown straps.
    - Secure all lids, doors, and caps with tape or Type III nylon cord.
    - Ensure the front stabilizer legs are extended and in the down position and the rear stabilizer legs are in the up and stowed position.
    - Lower the tongue support leg so the lunette is lower than the rear of the trailer.
    - Ensure the ramp is stowed and secured.
  - **Rigging.** Rig the load according to the steps in Figure 3-23.
  - **Hookup.** The hookup teams stand on the top of the shelter. The static wand person discharges the static electricity with the static wand. The forward hookup person places apex fitting 1 onto the forward cargo hook. The aft hookup person places apex fitting 2 onto the aft cargo hook. The hookup team then carefully dismounts the trailer and remains close to the load as the helicopter removes slack from the sling legs. When successful hookup is assured, the hookup team quickly exits the area underneath the helicopter to the designated rendezvous point.
  - **Derigging.** Derigging is the reverse of the preparation and rigging procedures.

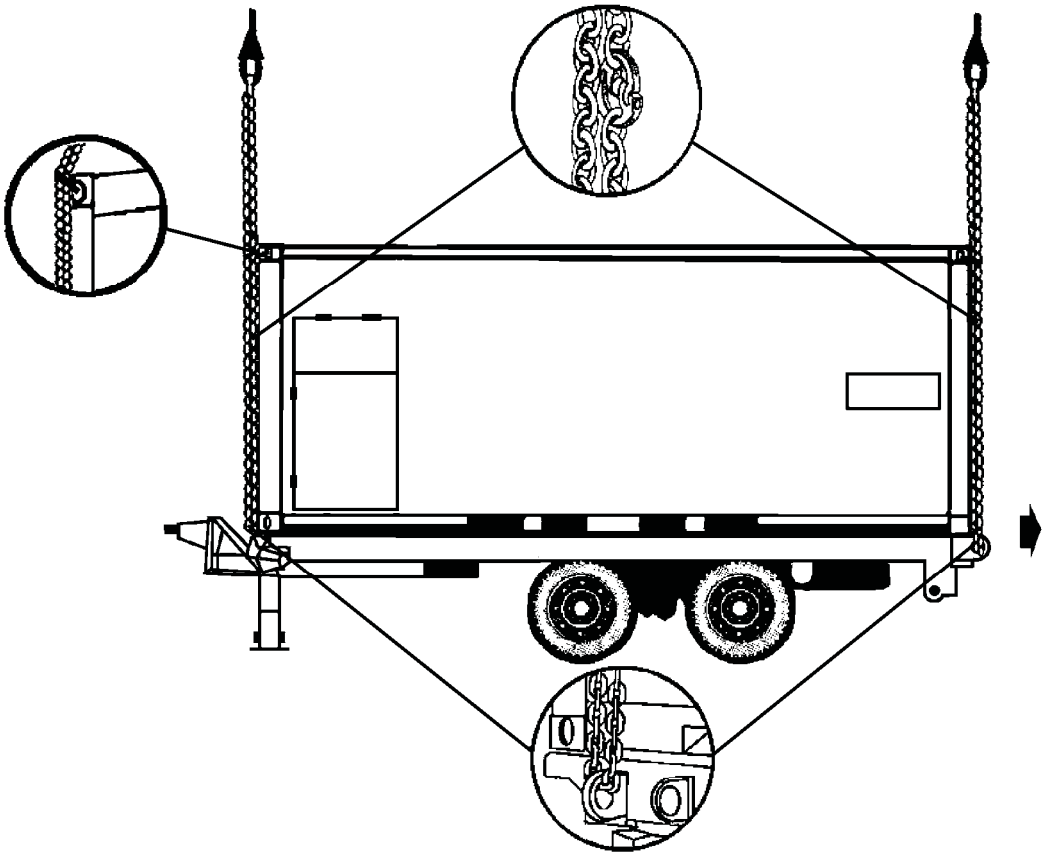

RIGGING STEPS

1. Connect 2 sling legs to apex fitting number 1. Attach two extra chain lengths to each existing chain on each sling leg using coupling links (for 25,000-pound capacity sling sets only). Position the apex fitting on top of the aft end of the trailer.

2. Loop the chain end of the sling legs through their respective lift provisions located on the frame of the trailer. Place the correct link from Table 3-23 in the grab hook.

3. Connect 2 sling legs to apex fitting number 2. Attach two extra chain lengths to each existing chain on each sling leg using coupling links (for 25,000-pound capacity sling sets only). Position the apex fitting on top of the front (lunette end) of the trailer.

4. Loop the chain end of the sling legs through their respective lift provisions located on the frame of the trailer. Place the correct link from Table 3-23 in the grab hook.

5. Secure all excess chain with tape or Type III nylon cord.

6. Cluster and tie (breakaway technique) the sling legs in each sling set together to prevent entanglement during hookup and lift-off. Safety tie each chain to the respective ISO provision with Type I 1/4-inch cotton webbing.

Figure 3-23. Standard Automotive Tools Set Mounted on SATS Trailer

M817A3 SEMI-TRAILER

3-25. The M871A3 semi-trailer is rigged for dual-point sling load using the following procedures:

- **Applicability.** The following item in Table 3-24 is certified for the helicopter(s) listed in the following table by the US Army Natick Soldier Center:

Table 3-24. M871A3 Semi-Trailer

Nomenclature	*Max Weight (Pounds)*	*Sling Set*	*Link Count Front/Rear*	*Type of Aircraft*
M871A3 Semi-Trailer	17,660	25K	75/3	CH-47

- **Materials.** The following materials are required to rig this load:
  - Sling set (25,000-pound capacity) with one additional apex fitting.
    - Additional chain length, part number 38850-00053-102, from a 25,000-pound capacity sling set (4 each).
    - Additional coupling link, part number 664241, from a 25,000-pound capacity sling set (4 each).
  - Tape, adhesive, pressure-sensitive, 2-inch wide roll.
  - Cord, nylon, Type III, 550-pound breaking strength.
  - Webbing, cotton, 1/4-inch, 80-pound breaking strength.
  - Strap, cargo, CGU-1/B (as required).
- **Personnel.** Two persons can prepare and rig this load in 15 minutes.
- **Procedures.** The following procedures apply to this load:
  - **Preparation.** Prepare the load using the following steps:
    - Connect one additional chain length to each chain of the sling set with the coupling link.
    - Ensure the spare tire is installed and secured correctly.
    - Rotate the mud flaps up into the stowed position
    - Ensure the ramp or equipment on the trailer is stowed and secured with chains or tiedown straps.

CAUTION

Ensure the cargo and equipment on the trailer bed does not interfere with the routing of the sling legs.

  - **Rigging.** Rig the load according to the steps in Figure 3-24.
  - **Hookup.** The hookup teams stand on the top of the trailer. The static wand person discharges the static electricity with the static wand. The forward hookup person places apex fitting 1 onto the forward cargo hook. The aft hookup person places apex fitting 2 onto the aft cargo hook. The hookup team then carefully dismounts the trailer and remains close to the load as the helicopter removes slack from the sling legs. When successful hookup is assured, the hookup team quickly exits the area underneath the helicopter to the designated rendezvous point.
  - **Derigging.** Derigging is the reverse of the preparation and rigging procedures.

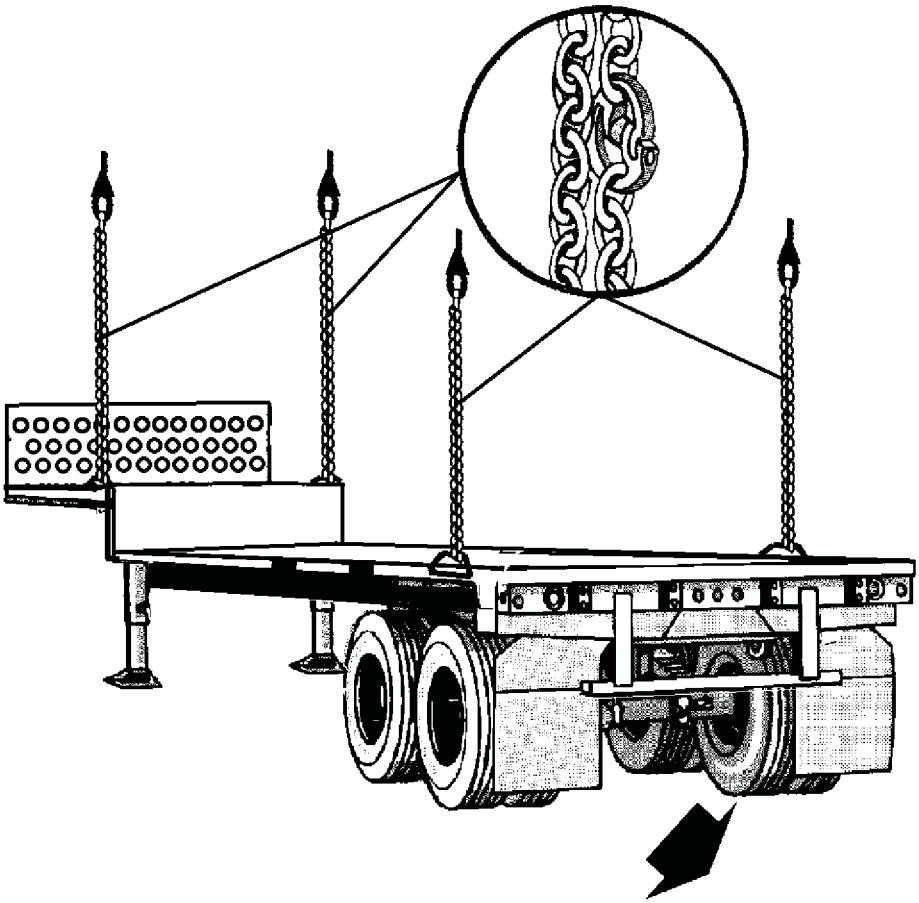

RIGGING STEPS

1. Connect 2 sling legs to apex fitting number 1. Position the apex fitting on the bed of the trailer.

2. Loop the chain end of the sling legs through their respective lift provisions located on the front of the trailer bed. Place the correct link from Table 3-24 in the grab hook.

3. Connect 2 sling legs to apex fitting number 2. Position the apex fitting on the bed of the trailer.

4. Loop the chain end of the sling legs through their respective lift provisions located on the rear of the trailer. Place the correct link from Table 3-24 in the grab hook.

5. Secure all excess chain with tape or Type III nylon cord.

6. Cluster and tie (breakaway technique) the sling legs in each sling set together to prevent entanglement during hookup and lift-off.

Figure 3-24. M871A3 Semi-Trailer

This page intentionally left blank.

Chapter 4

Certified Dual-Point Rigging Procedures for Trailers with Mounted Generators

INTRODUCTION

4-1. This chapter contains rigging procedures for dual-point trailers with mounted generators that have been certified for sling load. Each rigging procedure is found in a paragraph that includes a description of the load, materials required for rigging, and steps to complete the procedure. An applicability paragraph is also a part of each paragraph and identifies the certified loads. The certified dual-point rigging procedures for trailers with mounted generators are in this section. Paragraphs 4-2 through 4-6 give detailed instructions for rigging loads.

Note: Reach Pendants may be used on dual point loads. Place a Reach Pendant on each apex fitting. A static discharge person is not required when using a Reach Pendant.

M116A2 TRAILER-MOUNTED POWER UNITS, GENERATORS, AND POWER PLANTS

4-2. The M116A2 trailer-mounted power units, generators, and power plants are rigged for dual-point sling load using the following procedures:

- **Applicability.** The following items in Table 4-1 are certified for the helicopter(s) listed in the following table by US Army Natick Soldier Center:

Table 4-1. M116A2 Trailer-Mounted Power Units, Generators, and Power Plants

Nomenclature	*Max Weight (Pounds)*	*Sling Set*	*Link Count Front/Rear*	*Type of Aircraft*
PU-751/M, 5kW, Generator Variants: LOS V1/V2/V3/V4 Planning Trailer Radio Access Trailer	3,000	10K	3/40	CH-47
PU-753/M, 10kW, Generator Variants: NC OPS Trailer SCC TECH Trailer NC MGMT Trailer LEN MGMT Trailer LEN OPS Trailer SEN V1 Trailer SEN V2 Trailer Maintenance #1 Trailer AN/TSQ-182	3,000	10K	3/40	CH-47

- **Materials.** The following materials are required to rig this load:
  - Sling set (10,000-pound capacity) with one additional apex fitting.
  - Tape, adhesive, pressure-sensitive, 2-inch wide roll.
  - Cord, nylon, Type III, 550-pound breaking strength.
  - Webbing, cotton, 1/4-inch, 80-pound breaking strength.
- **Personnel.** Two persons can prepare and rig this load in 15 minutes.
- **Procedures.** The following procedures apply to this load:
  - **Preparation.** Prepare the load using the following steps:
    - Secure all loose chains, hoses, and cables to the trailer drawbar with Type III nylon cord.
    - Secure any lids, caps, or loose items with tape or Type III nylon cord.
    - Partially retract all landing legs and secure in position with Type III nylon cord.
    - Retract the lunette and secure in position with Type III nylon cord.
    - Ensure the parking brake is set.
  - **Rigging.** Rig the load according to the steps in Figure 4-1.
  - **Hookup.** The hookup teams stand on the trailer fenders. The static wand person discharges the static electricity with the static wand. The forward hookup person places apex fitting 1 onto the forward cargo hook. The aft hookup person places apex fitting 2 onto the aft cargo hook. The hookup team then carefully dismounts the trailer and remains close to the load as the helicopter removes slack from the sling legs. When successful hookup is assured, the hookup team quickly exits the area underneath the helicopter to the designated rendezvous point.
  - **Derigging.** Derigging is the reverse of the preparation and rigging procedures.

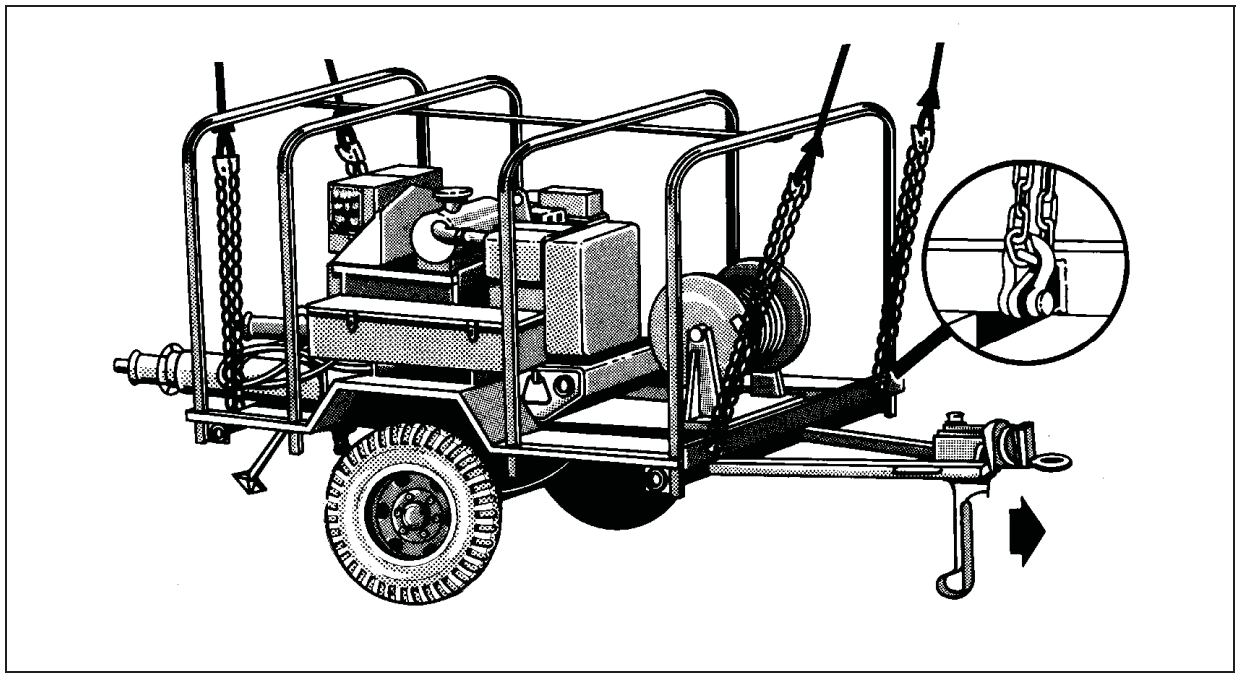

Figure 4-1. M116A2 Trailer-Mounted Power Units, Generators, and Power Plants

RIGGING STEPS
1. Connect 2 sling legs to apex fitting number 1. Position the apex fitting on the drawbar. 2. Loop the chain end of the sling legs through their respective lift provisions located on the front of the trailer. Place the correct link from Table 4-1 in the grab hook. 3. Connect 2 sling legs to apex fitting number 2. Position the apex fitting behind the generator. 4. Loop the chain end of the sling legs through their respective lift provisions. Place the correct link from Table 4-1 in the grab hook. 5. Secure all excess chain with tape or Type III nylon cord. 6. Cluster and tie (breakaway technique) the front sling legs on the top front of the generator set. Tape the sling legs to the front bow to prevent entanglement with the cable reel handle. 7. Cluster and tie (breakaway technique) the rear sling legs on the top rear of the generator set.

Figure 4-1. M116A2 Trailer-Mounted Power Units, Generators, and Power Plants (Continued)

M353 TRAILER CHASSIS WITH MOUNTED GENERATORS

4-3. The M353 trailer chassis with mounted generators are rigged for dual-point sling load using the following procedures:

- **Applicability.** The following items in Table 4-2 are certified for the helicopter(s) listed in the following table by the US Army Natick Soldier Center:

Table 4-2. M353 Trailer Chassis with Mounted Generators

Nomenclature	*Max Weight (Pounds)*	*Sling Set*	*Link Count Front/Rear*	*Type of Aircraft*
M353 Trailer Chassis	2,720	15K	10/15	CH-53
MEP-005-A	6,220	15K	10/15	CH-53
MEP-006-A	7,720	15K	10/15	CH-53
MEP-114-A	6,220	15K	10/15	CH-53
MEP-115-A	6,320	15K	10/15	CH-53

- **Materials.** The following materials are required to rig this load:
  - Sling set (15,000-pound capacity) with one additional web ring.
  - Tape, adhesive, pressure-sensitive, 2-inch wide roll.
  - Cord, nylon, Type III, 550-pound breaking strength.
  - Webbing, cotton, 1/4-inch, 80-pound breaking strength.
- **Personnel.** Two persons can prepare and rig this load in 10 minutes.
- **Procedures.** The following procedures apply to this load:
  - **Preparation.** Prepare the load using the following steps:
    - Secure all loose chains, hoses, and cables to the trailer drawbar with Type III nylon cord.
    - Secure any lids, caps, or loose items with tape or Type III nylon cord.
    - Ensure the parking brake is set.

- **Rigging.** Rig the load according to the steps in Figure 4-2.
- **Hookup.** The hookup teams stand on the trailer. The static wand person discharges the static electricity with the static wand. The forward hookup person places apex fitting 1 onto the forward cargo hook. The aft hookup person places apex fitting 2 onto the aft cargo hook. The hookup team then carefully dismounts the trailer and remains close to the load as the helicopter removes slack from the sling legs. When successful hookup is assured, the hookup team quickly exits the area underneath the helicopter to the designated rendezvous point.
- **Derigging.** Derigging is the reverse of the preparation and rigging procedures.

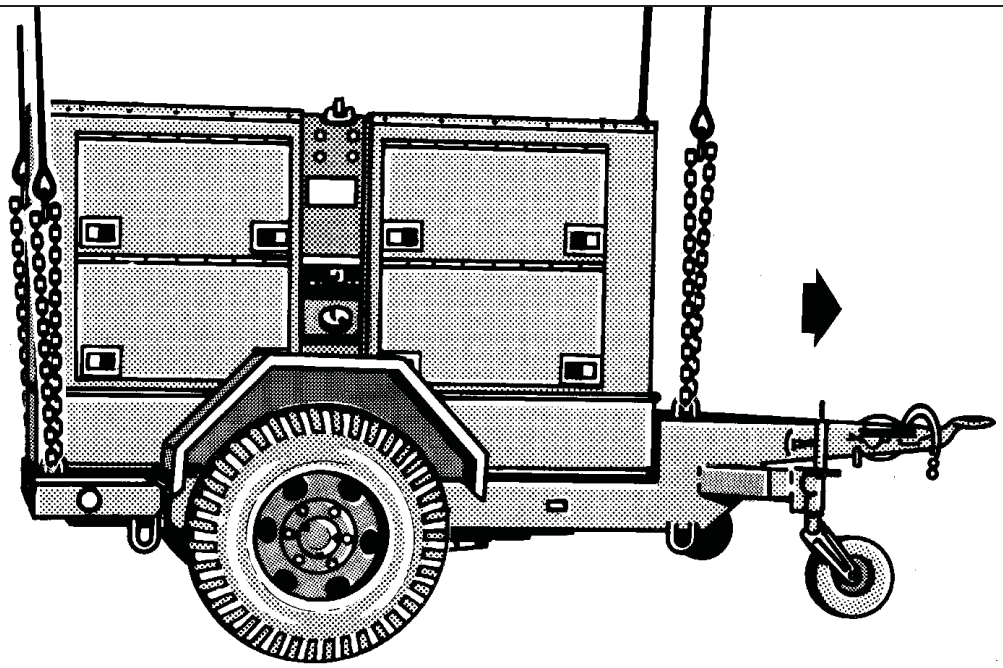

RIGGING STEPS

1. Connect 2 sling legs to web ring number 1. Position the web ring on top of the front of the trailer.
2. Loop the chain end of the sling legs through their respective lift provisions located on the front of the trailer. Place the correct link from Table 4-2 in the grab hook.
3. Connect 2 sling legs to web ring number 2. Position the web ring on top of the aft end of the trailer.
4. Loop the chain end of the sling legs through their respective lift provisions. Place the correct link from Table 4-2 in the grab hook.
5. Secure all excess chain with tape or Type III nylon cord.
6. Cluster and tie (breakaway technique) the legs of each sling set on top of the generator set to prevent entanglement during hook-up and lift off.

Figure 4-2. M353 Trailer Chassis with Mounted Generators

M200A1 TRAILER-MOUNTED POWER UNITS, GENERATORS, AND POWER PLANTS

4-4. The M200A1 trailer-mounted power units, generators, and power plants are rigged for dual-point sling load using the following procedures:

- **Applicability.** The following items in Table 4-3 are certified for the helicopter(s) listed in the following table by the US Army Natick Soldier Center:

Table 4-3. M200A1 Trailer-Mounted Power Units, Generators, and Power Plants

Nomenclature	*Max Weight (Pounds)*	*Sling Set*	*Link Count Front/Rear*	*Type of Aircraft*
PU-405 A/M Power Unit, 15kW, with Acoustic Suppression Kit (ASK)	6,740	10K	3/10	CH-47
PU-406 B/M Power Unit, 30kW, with Acoustic Suppression Kit (ASK)	7,250	10K	3/10	CH-47
PU-806, 60 kW, 400 Hz Power Unit with MEP816A, 60kW, 400Hz, Generator Set	7,250	10K	3/10	CH-47

- **Materials.** The following materials are required to rig this load:
  - Sling set (10,000-pound capacity) with one additional apex fitting.
  - Tape, adhesive, pressure-sensitive, 2-inch wide roll.
  - Cord, nylon, Type III, 550-pound breaking strength.
  - Webbing, cotton, 1/4-inch, 80-pound breaking strength.
  - Felt sheet, cattle hair, Type IV, 1/2-inch or suitable substitute.
- **Personnel.** Two persons can prepare and rig this load in 15 minutes.
- **Procedures.** The following procedures apply to this load:
  - **Preparation.** Prepare the load using the following steps:
    - Secure all loose chains, hoses, and cables to the trailer drawbar with Type III nylon cord.
    - Secure any lids, caps, or loose items with tape or Type III nylon cord.
    - Lower the lunette as far as possible by adjusting the landing legs
    - Ensure the hand brakes are set.
  - **Rigging.** Rig the load according to the steps in Figure 4-3.
  - **Hookup.** The hookup teams stand on the trailer fenders. The static wand person discharges the static electricity with the static wand. The forward hookup person places apex fitting 1 onto the forward cargo hook. The aft hookup person places apex fitting 2 onto the aft cargo hook. The hookup team then carefully dismounts the trailer and remains close to the load as the helicopter removes slack from the sling legs. When successful hookup is assured, the hookup team quickly exits the area underneath the helicopter to the designated rendezvous point.
  - **Derigging.** Derigging is the reverse of the preparation and rigging procedures.

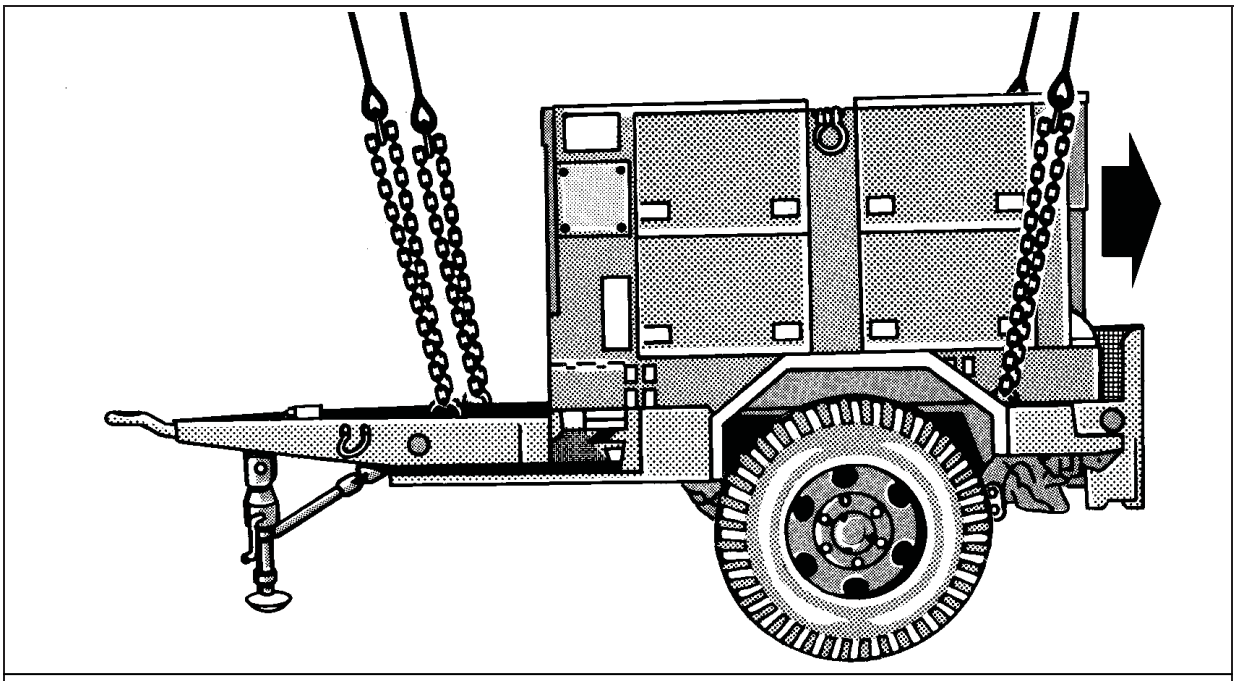

RIGGING STEPS

1. Connect 2 sling legs to apex fitting number 1. Position the apex fitting on top of the front of the trailer.

2. Loop the chain end of the sling legs through their respective lift provisions located on the front of the trailer. Place the correct link from Table 4-3 in the grab hook.

3. Connect 2 sling legs to apex fitting number 2. Position the apex fitting on top of the aft end of the trailer.

4. Loop the chain end of the sling legs through their respective lift provisions. Place the correct link from Table 4-3 in the grab hook.

5. Secure all excess chain with tape or Type III nylon cord.

6. Cluster and tie (breakaway technique) the legs of each sling set on top of the generator set to prevent entanglement during hook-up and lift off.

Figure 4-3. M200A1 Trailer-Mounted Power Units, Generators, and Power Plants

HIGH MOBILITY TRAILER WITH AN/MJQ-35A POWER UNIT

4-5. The high mobility trailer with AN/MJQ-35A power unit is rigged for dual-point sling load using the following procedures:

- **Applicability.** The following item in Table 4-4 is certified for the helicopter(s) listed in the following table by the US Army Natick Soldier Center:

Table 4-4. High Mobility Trailer with AN/MJQ-35A Power Unit

Nomenclature	*Max Weight (Pounds)*	*Sling Set*	*Link Count Front/Rear*	*Type of Aircraft*
AN/MJQ-35A, 5kW, 69Hz, Power Plant	3,540	10K	20/3	CH-47

- **Materials.** The following materials are required to rig this load:
  - Sling set (10,000-pound capacity) with one additional apex fitting.
  - Tape, adhesive, pressure-sensitive, 2-inch wide roll.
  - Cord, nylon, Type III, 550-pound breaking strength.
  - Webbing, cotton, 1/4-inch, 80-pound breaking strength.
  - Felt sheet, cattle hair, Type IV, 1/2-inch or suitable substitute.
- **Personnel.** Two persons can prepare and rig this load in 10 minutes.
- **Procedures.** The following procedures apply to this load:
  - **Preparation.** Prepare the load using the following steps:
    - Secure all loose chains, hoses, and cables to the trailer drawbar with Type III nylon cord.
    - Secure any lids, caps, or loose items with tape or Type III nylon cord.
    - Remove the rear stabilizer legs from their stowage location and install them with the lower support section fully retracted.
    - Lower the lunette as close as possible to the ground.
    - Ensure the hand brakes are set.
  - **Rigging.** Rig the load according to the steps in Figure 4-4.
  - **Hookup.** The hookup teams stand on the trailer bed. The static wand person discharges the static electricity with the static wand. The forward hookup person places apex fitting 1 onto the forward cargo hook. The aft hookup person places apex fitting 2 onto the aft cargo hook. The hookup team then carefully dismounts the trailer and remains close to the load as the helicopter removes slack from the sling legs. When successful hookup is assured, the hookup team quickly exits the area underneath the helicopter to the designated rendezvous point.
  - **Derigging.** Derigging is the reverse of the preparation and rigging procedures.

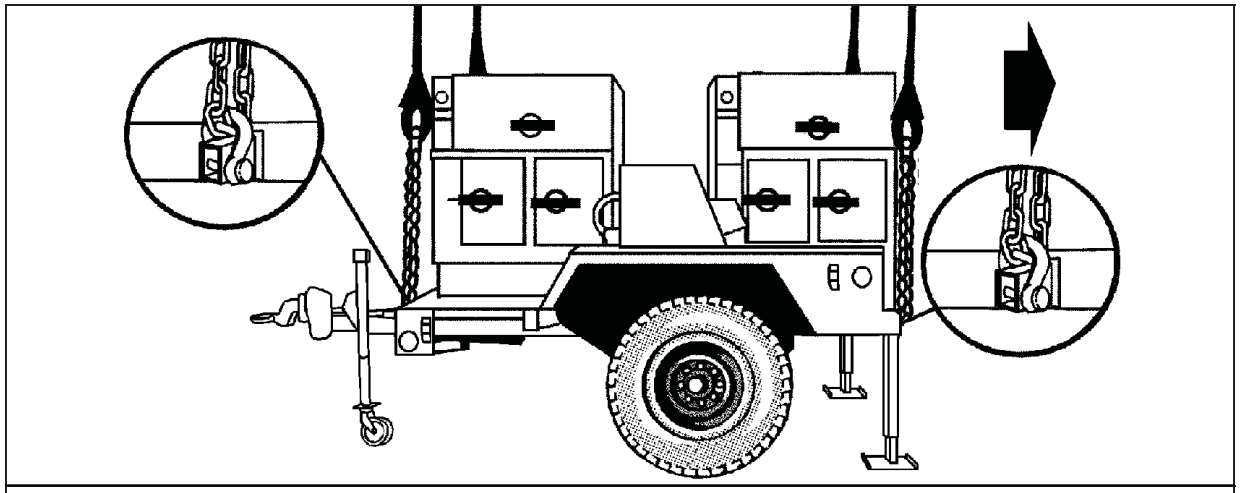

RIGGING STEPS

1. Connect 2 sling legs to apex fitting number 1. Position the apex fitting on top of the front of the trailer.

2. Loop the chain end of the sling legs through their respective lift provisions located on the front of the trailer. Place the correct link from Table 4-4 in the grab hook.

3. Connect 2 sling legs to apex fitting number 2. Position the apex fitting on top of the aft end of the trailer.

4. Loop the chain end of the sling legs through their respective lift provisions. Place the correct link from Table 4-4 in the grab hook.

5. Secure all excess chain with tape or Type III nylon cord.

6. Pad the slings or chains where they may contact the generator. Secure the padding with tape.

7. Cluster and tie (breakaway technique) the legs of each sling set on top of the generator set to prevent entanglement during hook-up and lift off.

Figure 4-4. High Mobility Trailer with AN/MJQ-35A Power Unit

AVIATION GROUND POWER UNIT

4-6. The aviation ground power unit is rigged for dual-point sling load using the following procedures:

- **Applicability.** The following item in Table 4-5 is certified for the helicopter(s) listed in the following table by the US Army Natick Soldier Center:

Table 4-5. Aviation Ground Power Unit

Nomenclature	*Max Weight (Pounds)*	*Sling Set*	*Link Count Front/Rear*	*Type of Aircraft*
Aviation Ground Power Unit	4,190	10K	3/3	CH-47

- **Materials.** The following materials are required to rig this load:
  - Sling set (10,000-pound capacity) with one additional apex fitting.
  - Tape, adhesive, pressure-sensitive, 2-inch wide roll.
  - Cord, nylon, Type III, 550-pound breaking strength.
  - Webbing, cotton, 1/4-inch, 80-pound breaking strength.
  - Strap, cargo, tie-down, CGU-1/B (4 each).
  - Webbing, nylon, tubular, 1/2-inch, 1000-pound breaking strength.
- **Personnel.** Two persons can prepare and rig this load in 10 minutes.
- **Procedures.** The following procedures apply to this load:
  - **Preparation.** Prepare the load using the following steps:
    - Stow and secure the tow bar in the raised position with 1/2-inch tubular nylon webbing.
    - Secure all loose equipment inside the unit with Type III nylon cord. Close all doors and secure the handles with tape.
    - Route a CGU-1/B tie-down strap horizontally around the unit. Position the strap 16 inches down from the top of the unit. Repeat this procedure with a second strap positioned 8 inches above the first strap.
    - Route a strap through the forklift provision and vertically around the unit. Repeat this procedure using the second forklift provision.
    - Tape or remove the exhaust cover to prevent damage during flight.
    - Ensure the hand brakes are set.
    - Ensure the fuel tank is not more than 3/4 full. Inspect fuel tank cap, oil filler caps, and battery caps to ensure they are installed properly and are secure.
  - **Rigging.** Rig the load according to the steps in Figure 4-5.
  - **Hookup.** The hookup teams stand on top of the unit. The static wand person discharges the static electricity with the static wand. The forward hookup person places apex fitting 1 onto the forward cargo hook. The aft hookup person places apex fitting 2 onto the aft cargo hook. The hookup team then carefully dismounts the trailer and remains close to the load as the helicopter removes slack from the sling legs. When successful hookup is assured, the hookup team quickly exits the area underneath the helicopter to the designated rendezvous point.
  - **Derigging.** Derigging is the reverse of the preparation and rigging procedures.

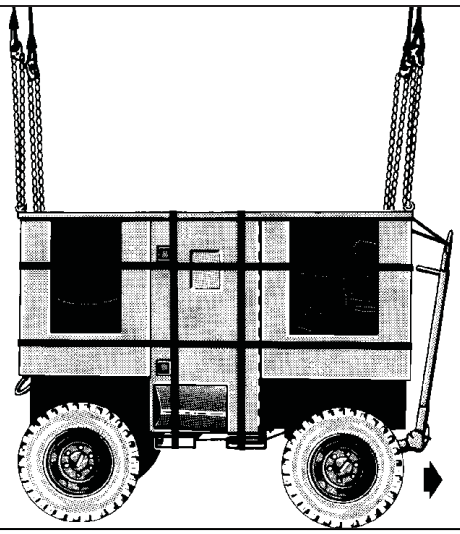

RIGGING STEPS

1. Connect 2 sling legs to apex fitting number 1. Position the apex fitting on top of the tongue end of the unit.

2. Loop the chain end of the sling legs through their respective lift provisions located on the front of the trailer. Place the correct link from Table 4-5 in the grab hook.

3. Connect 2 sling legs to apex fitting number 2. Position the apex fitting on top of the aft end of the unit.

4. Loop the chain end of the sling legs through their respective lift provisions. Place the correct link from Table 4-5 in the grab hook.

5. Cluster and tie breakaway technique) the legs of each sling set on top of the generator set to prevent entanglement during hook-up and lift off.

Figure 4-5. Aviation Ground Power Unit

Chapter 5

Certified Dual-Point Rigging Procedures for Tandem Loads

INTRODUCTION

5-1. This chapter contains rigging procedures for dual-point tandem loads that have been certified for sling load. Each rigging procedure is found in a paragraph that includes a description of the load, materials required for rigging, and steps to complete the procedure. An applicability paragraph is also a part of each paragraph and identifies the certified loads. The certified dual-point rigging procedures for tandem loads are in this section. Paragraphs 5-2 through 5-34 give detailed instructions for rigging loads.

Note: Reach Pendants may be used on dual point loads. Place a Reach Pendant on each apex fitting. A static discharge person is not required when using a Reach Pendant.

M998/M1038 TRUCK, UTILITY, 1-1/4 TON (HMMWV) WITH M101A1/A2 TRAILER, CARGO

5-2. The M998/M1038 truck, utility, 1-1/4 ton with M101A1/A2 trailer, cargo is rigged for dual-point sling load using the following procedures:

- **Applicability.** The following items in Table 5-1 are certified for the helicopter(s) listed in the following table by the US Army Natick Soldier Center:

Note. Field commanders should note that minor bending of the front wall of the M101A1/M101A2 trailer may occur as a result of sling loading due to the compression from the slings. The possibility of bending does not pose a safety threat to flight or ground personnel and will not affect the operation of the trailer.

Table 5-1. M998/M1038 Truck, Utility, 1-1/4 Ton with M101A1/A2 Trailer, Cargo

Nomenclature	*Max Weight (Pounds)*	*Sling Set*	*Link Count Front/Rear*	*Type of Aircraft*
Truck, 1 ¼-Ton, HMMWV, M998, Empty	5,200	10K	76/3	CH-47
Truck, 1 ¼-Ton, HMMWV, M998, Loaded	7,700	10K	76/3	CH-47
Truck, 1 ¼-Ton, HMMWV, M1038, Empty	5,327	10K	76/3	CH-47
Truck, 1 ¼-Ton, HMMWV, M1038, Loaded	7,700	10K	76/3	CH-47
Trailer, Cargo, M101A1/M101A2, Empty	1,280	10K	59/36	CH-47
Trailer, Cargo, M101A1/M101A2, Loaded	2,780	10K	59/36	CH-47

Notes. 1. The maximum certified combined load weight is 10,480 pounds.

2. The recommended airspeed for combined loads weighing 6,607 pounds or less is 100 knots.

3. The recommended airspeed for combined loads weighing between 6,607 and 10,480 pounds or less is 110 knots.

- **Materials.** The following materials are required to rig this load:
  - Sling set (10,000-pound capacity) (2 each).
  - Tape, adhesive, pressure-sensitive, 2-inch wide roll.
  - Cord, nylon, Type III, 550-pound breaking strength.
  - Webbing, cotton, 1/4-inch, 80-pound breaking strength.
  - Strap, cargo, tie-down, CGU-1/B (2 each, or more as required to secure cargo).
  - Reach pendant, 11K or 25K, OPTIONAL EQUIPMENT.
- **Personnel.** Two persons can prepare and rig the M998/M1038 HMMWVs in 15 minutes. Two persons can prepare and rig the M101A1/M101A2 trailer in 10 minutes.
- **Procedures.** Attach the trailer to the truck by placing the lunette on the pintle hook and securing the latch. Secure the safety chains, cables, and hoses to the trailer. Position the vehicle on level ground so both the truck and trailer are in a straight line. The following procedures apply to this load:
  - **Preparation.** Prepare the load using the following steps:
    - Fold mirrors forward in front of the windshield and tie together with Type III nylon cord. Remove the doors and secure to the seats with Type III nylon cord.
    - Secure all equipment and cargo inside the truck with tie-down straps, tape, or Type III nylon cord.
    - Ensure the fuel tank is not over 3/4 full. Inspect fuel tank cap, oil filler cap, and battery caps for proper installation.
    - Engage the vehicle parking brake and put the transmission in neutral.
    - Ensure the front wheels are pointed straight ahead. Tie down the steering wheel, using the securing device attached under the dashboard.
    - Secure all equipment and cargo inside the trailer with tie-down straps, tape, or Type III nylon cord.
    - Place the tailgate in the open position.
    - Remove the tarp and front rack and place it in the bed of the trailer. Place the accompanying load on top of the front rack. Secure the accompanying load to the trailer using tie-down straps. Route the straps diagonally across the load from the tailgate hinge to the front lifting shackles.
    - Ensure the parking brake is set.
    - Attach the hook portion of a CGU-1/B tie-down strap down to the left front lift provision on the trailer. Connect the ratchet to the left inside tie-down provision located near the pintle.
    - Repeat the above procedure on the right side of the load.
    - Tighten both CGU-1/B tie-down straps at the same time. Safety the ratchet handles in the closed position with tape.
  - **Rigging.** Rig the load according to the steps in Figure 5-1.
  - **Hookup**. Two hookup teams are required for this load. The static wand person stands in the bed of the HMMWV and discharges the static electricity with the static wand. The forward hookup person stands in the bed of the HMMWV and places apex fitting 1 onto the forward cargo hook. The aft hookup person stands in the bed of the trailer and places apex fitting 2 onto the aft cargo hook. The hookup team then carefully dismounts the trailer and remains close to the load as the helicopter removes slack from the sling legs. When successful hookup is assured, the hookup team quickly exits the area underneath the helicopter to the designated rendezvous point.
  - **Derigging.** Derigging is the reverse of the preparation and rigging.

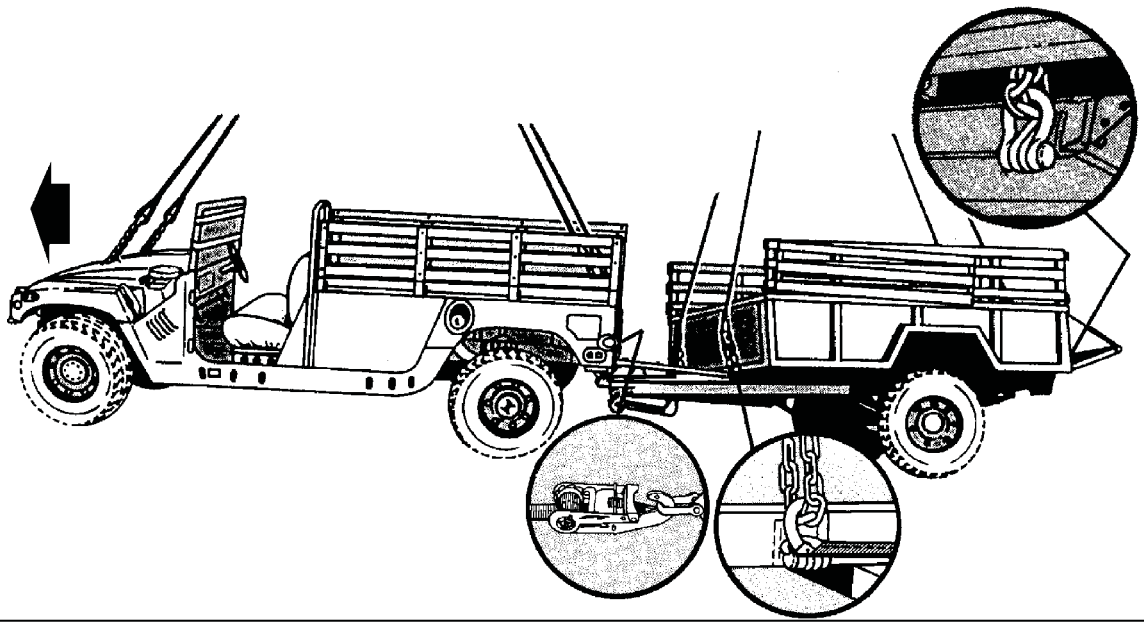

RIGGING STEPS

Note. The following rigging procedures should result in the load assuming the following characteristics during lift-off. EMPTY: HMMWV should be 1-2 degrees nose down and the trailer should be level. LOADED: HMMWV and trailer should be level.

1. Position the apex fitting of sling set 1 in the bed of the vehicle. Route outer sling legs 1 and 2 to the front of the vehicle and inner sling legs 3 and 4 to the rear. Sling legs 1 and 3 must be on the left side of the load.

2. Loop the chain end of sling leg 1 through the left front lift provision that protrudes through the hood. Place the correct link from Table 5-1 in the grab hook. Repeat with sling leg 2 and the right front lift provision. Secure excess chain with tape or Type III nylon cord.

3. Route the chain end of sling leg 3 through the eyelet opening in the upper left corner of the tailgate. Loop the chain end through the left lift provision on the bumper and thread back through the eyelet opening in the tailgate. Place the correct link from Table 5-1 in the grab hook. Repeat with sling leg 4 and the right rear lift provision.

4. Cluster and tie (breakaway technique) all sling legs together on top of the vehicle to prevent entanglement during hookup and lift-off.

5. Position apex fitting of sling set 2 in the trailer bed. Route outer sling legs 1 and 2 to the front of the trailer and inner sling legs 3 and 4 to the rear. Route the rear chains through the opening between the tailgate and the trailer bed inside of the tailgate hinges. Sling legs 1 and 3 must be on the left side of the load.

Figure 5-1. M998/M1038 Truck, Utility, 1-1/4 Ton (HMMWV) with M101A1/A2 Trailer, Cargo

RIGGING STEPS (Continued)
6. Loop the chain end of sling leg 1 through the left front lift provision located on the front of the trailer. Place the correct link from Table 5-1 in the grab hook. Repeat with sling leg 2 through the right front lift provision. Secure excess chain with tape or Type III nylon cord. 7. Route the chain end of sling leg 3 through the left rear lift provision. Place the correct link from Table 5-1 in the grab hook. Repeat with sling leg 4 through the right rear lift provision. Secure excess chain with tape or Type III nylon cord. 8. Cluster and tie (breakaway technique) all sling legs together on top of the trailer to prevent entanglement during hookup and lift-off.

Figure 5-1. M998/M1038 Truck, Utility, 1-1/4 Ton (HMMWV) with M101A1/A2 Trailer, Cargo (Continued)

M1037 SHELTER CARRIER (HMMWV) WITH M101A2 TRAILER, CARGO

5-3. The M1037 shelter carrier with M101A1/A2 trailer, cargo is rigged for dual-point sling load using the following procedures:

- **Applicability.** The following items in Table 5-2 are certified for the helicopter(s) listed in the following table by the US Army Natick Soldier Center:

Note. Field commanders should note that minor bending of the front wall of the M101A1/M101A2 trailer may occur as a result of sling loading due to the compression from the slings. The possibility of bending does not pose a safety threat to flight or ground personnel and will not affect the operation of the trailer.

Table 5-2. M1037 Shelter Carrier with M101A2 Trailer, Cargo

Nomenclature	*Max Weight (Pounds)*	*Sling Set*	*Link Count Front/Rear*	*Type of Aircraft*
M1037 NC Support Vehicle	8,227	10K	80/30	CH-47
M1037 LEN Cable Vehicle	8,148	10K	80/30	CH-47
M1037 with SCC Command V1 S-250 Shelter	8,346	10K	80/30	CH-47
M1037 with SCC Command V2 S-250 Shelter	8,346	10K	80/30	CH-47
M1037 with Management 2 S-250 Shelter	7,905	10K	80/30	CH-47
NC Support M101A2, Trailer	2,643	10K	90/70	CH-47
LEN Cable Vehicle M101A2, Trailer	2,796	10K	90/70	CH-47
SSC Command V1 M101A2 Trailer	1,981	10K	90/70	CH-47
SSC Command V2 M101A2 Trailer	1,430	10K	90/70	CH-47
Management 2 M101A2 Trailer	1,430	10K	90/70	CH-47

Note. The NC support vehicle and the LEN cable vehicle have an enclosed canvas cargo bed, not the S-250 shelter.

- **Materials.** The following materials are required to rig this load:
  - Sling set (10,000-pound capacity) (2 each).
    - Additional chain length, part number 38850-00053-101, from a 10,000-pound capacity sling set (8 each).
    - Additional coupling link, part number 577-0615, from a 10,000-pound sling set (8 each).
  - Tape, adhesive, pressure-sensitive, 2-inch wide roll.
  - Cord, nylon, Type III, 550-pound breaking strength.
  - Webbing, cotton, 1/4-inch, 80-pound breaking strength.
  - Strap, cargo, tie-down, CGU-1/B (2 each, or more as required to secure cargo).
  - Felt sheet, cattle hair, Type IV, 1/2-inch or suitable substitute.
- **Personnel.** Two persons can prepare and rig the M1037 HMMWV in 15 minutes. Two persons can prepare and rig the M101A2 trailer in 10 minutes.
- **Procedures.** Attach the trailer to the truck by placing the lunette on the pintle hook and securing the latch. Secure the safety chains, cables, and hoses to the trailer. Position the vehicle on level ground so both the truck and trailer are in a straight line. The following procedures apply to this load:
  - **Preparation.** Prepare the load using the following steps:
    - Fold mirrors forward in front of the windshield and tie together with Type III nylon cord. Remove the doors and secure to the seats with Type III nylon cord.
    - Ensure the shelter is secured to the vehicle using wire rope or tie-down straps. Secure all loose equipment inside the shelter with tape, Type III nylon cord, or tie-down straps. Close and secure the door.
    - Secure all equipment and cargo inside the truck with tie-down straps, tape, or Type III nylon cord.
    - Ensure the fuel tank is not over 3/4 full. Inspect the fuel tank cap, oil filler cap, and battery caps for proper installation.
    - Engage the vehicle parking brake and put the transmission in neutral.
    - Ensure the front wheels are pointed straight ahead. Tie down the steering wheel, using the securing device attached under the dashboard.
    - Install the lift provisions on the outer ends of the rear bumper by removing the tiedown provisions located on the front bumper and installing on the outer ends of the rear bumper.
    - Secure all equipment and cargo inside the trailer with tie-down straps, tape, or Type III nylon cord.
    - Place the tailgate in the open position.
    - Remove the tarp and front rack and place it in the bed of the trailer. Place the accompanying load on top of the front rack. Secure the accompanying load to the trailer using tie-down straps. Route the straps diagonally across the load from the tailgate hinge to the front lifting shackles.
    - Ensure the parking brake is set.
    - Attach the hook portion of a CGU-1/B tie-down strap down to the left front lift provision on the trailer. Connect the ratchet to the left inside tie-down provision located near the pintle.
    - Repeat the above procedure on the right side of the load.
    - Tighten both CGU-1/B tie-down straps at the same time. Secure the excess strap and safety the ratchet handles in the closed position with tape.
    - Connect one additional chain length to each chain on each sling set with the coupling links.
  - **Rigging.** Rig the load according to the steps in Figure 5-2.

- **Hookup.** Two hookup teams are required for this load. The static wand person discharges the static electricity with the static wand. The forward hookup person kneels on top of the shelter and places apex fitting 1 onto the forward cargo hook. The aft hookup person stands in the bed of the trailer and places apex fitting 2 onto the aft cargo hook. The hookup team then carefully dismounts the trailer and remains close to the load as the helicopter removes slack from the sling legs. When successful hookup is assured, the hookup team quickly exits the area underneath the helicopter to the designated rendezvous point.
- **Derigging.** Derigging is the reverse of the preparation and rigging procedures.

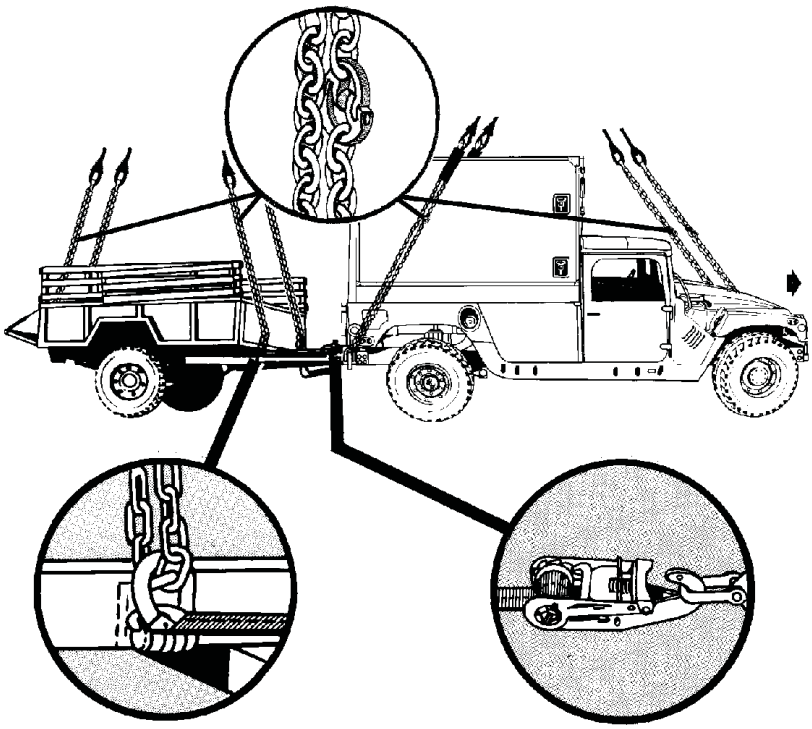

RIGGING STEPS

1. Position the apex fitting of sling set 1 on top of the shelter. Route outer sling legs 1and 2 to the front of the vehicle and inner sling legs 3 and 4 to the rear. Sling legs 1 and 3 must be on the left side of the load.

2. Loop the chain end of sling leg 1 through the left front lift provision that protrudes through the hood. Place the correct link from Table 5-2 in the grab hook. Repeat with sling leg 2 and the right front lift provision. Secure excess chain with tape or Type III nylon cord.

3. Loop the chain end of the sling legs through their respective lift provisions located on the outer ends of the rear bumper. Place the correct link from Table 5-2 in the grab hook. Secure excess chain with tape or Type III nylon cord.

4. Pad the chain where it contacts the shelter sides.

5. Cluster and tie (breakaway technique) all sling legs together on top of the vehicle to prevent entanglement during hookup and lift-off.

Figure 5-2. M1037 Shelter Carrier with M101A2 Trailer, Cargo

RIGGING STEPS (Continued)

6. Position the apex fitting of sling set 2 in the trailer bed. Route outer sling legs 1and 2 to the front of the trailer and inner sling legs 3 and 4 to the rear. Route the rear chains through the opening between the tailgate and the trailer bed and inside of the trailer hinges. Sling legs 1 and 3 must be on the left side of the load.

7. Loop the chain end of sling leg 1 through the left front lift provision located on the front of the trailer. Place the correct link from Table 5-2 in the grab hook. Repeat with sling leg 2 through the right front lift provision. Secure excess chain with tape or Type III nylon cord.

8. Route the chain end of sling leg 3 through the left rear lift provision. Place the correct link from Table 5-2 in the grab hook. Repeat with sling leg 4 through the right rear lift provision. Secure excess chain with tape or Type III nylon cord.

9. Cluster and tie (breakaway technique) all sling legs together on top of the trailer to prevent entanglement during hookup and lift-off.

Figure 5-2. M1037 Shelter Carrier with M101A2 Trailer, Cargo (Continued)

M1037 SHELTER CARRIER (HMMWV) WITH S-250/S-250E SHELTER AND M116A2 TRAILER MOUNTED GENERATORS, PU-751/PU753/PU-620/M

5-4. The M1037 Shelter Carrier with S-250/S-250E shelter and M116A2 trailer mounted generators, PU-751/PU753/PU-620/M are rigged for dual-point sling load using the following procedures:

- **Applicability.** The following items in Table 5-3 are certified for the helicopter(s) listed in the following table by the US Army Natick Soldier Center:

Table 5-3. M1037 Shelter Carrier with S250/S-250E Shelter and M116A2 Trailer Mounted Generators

Nomenclature	*Max Weight (Pounds)*	*Sling Set*	*Link Count Front/Rear*	*Type of Aircraft*
M1037 with LOS (V1) S-250 Shelter and PU-751/M Generator	M1037-8,246 PU-751-2,772	10K	HMMWV-80/30 PU-751-90/20	CH-47
M1037 with LOS (V2) S-250 Shelter and PU-751/M Generator	M1037-7,851 PU-751-2,776	10K	HMMWV-80/30 PU-751-90/20	CH-47
M1037 with NC LOS (V3) S-250 Shelter and PU-751/M Generator	M1037-8,225 PU-751-2,772	10K	HMMWV-80/30 PU-751-90/20	CH-47
M1037 with LEN LOS (V4) S-250 Shelter and PU-751/M Generator	M1037-8,125 PU-751-2,772	10K	HMMWV-80/30 PU-751-90/20	CH-47
M1037 with SCC Planning S-250E Shelter and PU-751/M Generator	M1037-8,003 PU-751-2,531	10K	HMMWV-80/30 PU-751-90/20	CH-47
M1037 with Radio Accessories S-250 Shelter and PU-751/M Generator	M1037-8,226 PU-751-2,751	10K	HMMWV-80/30 PU-751-90/20	CH-47
M1037 with SEN (V1) S-250E Shelter and PU-753/M Generator	M1037-8,231 PU-753-2,759	10K	HMMWV-80/30 PU-751-90/20	CH-47

Table 5-3. M1037 Shelter Carrier with S250/S-250E Shelter and M116A2 Trailer Mounted Generators (Continued)

Nomenclature	*Max Weight (Pounds)*	*Sling Set*	*Link Count Front/Rear*	*Type of Aircraft*
M1037 with SEN (V2) S-250E Shelter and PU-753/M Generator	M1037-8,354 PU-753-2,759	10K	HMMWV-80/3 PU-751-90/20	CH-47
M1037 with Maintenance 1 S-250 Shelter and PU-753/M Generator	M1037-8,084 PU-753-2,680	10K	HMMWV-80/3 PU-751-90/20	CH-47
M1037 with NC Operations S-250E Shelter and PU-753/M Generator	M1037-8,222 PU-753-2,681	10K	HMMWV-80/3 PU-751-90/20	CH-47
M1037 with NC Management S-250E Shelter and PU-753/M Generator	M1037-7,921 PU-753-2,681	10K	HMMWV-80/3 PU-751-90/20	CH-47
M1037 with LEN Operations S-250E Shelter and PU-753/M Generator	M1037-8,309 PU-753-2,759	10K	HMMWV-80/3 PU-751-90/20	CH-47
M1037 with LEN Management S-250E Shelter and PU-753/M Generator	M1037-8,288 PU-753-2,681	10K	HMMWV-80/30 PU-751-90/20	CH-47
M1037 with SCC Technical S-250E Shelter and PU-753/M Generator	M1037-8,075 PU-753-2,681	10K	HMMWV-80/30 PU-751-90/20	CH-47
M1037 S-250 Shelter and PU-625/G Generator	M1037-8,800 PU-625-2,000	10K	HMMWV-80/30 PU-751-90/20	CH-47

- **Materials.** The following materials are required to rig this load:
  - Sling set (10,000-pound capacity) (2 each).
    - Additional chain length, part number 38850-00053-101, from a 10,000-pound capacity sling set (8 each).
    - Additional coupling link, part number 577-0615, from a 10,000-pound sling set (8 each).
  - Tape, adhesive, pressure-sensitive, 2-inch wide roll.
  - Cord, nylon, Type III, 550-pound breaking strength.
  - Webbing, cotton, 1/4-inch, 80-pound breaking strength.
  - Strap, cargo, tie-down, CGU-1/B (2 each, or more as required to secure cargo).
  - Felt sheet, cattle hair, Type IV, 1/2-inch or suitable substitute.
- **Personnel.** Two persons can prepare and rig the M1037 HMMWV in 15 minutes. Two persons can prepare and rig the generator set in 10 minutes.
- **Procedures.** Attach the generator set to the truck by placing the lunette on the pintle hook and securing the latch. Secure the safety chains, cables, and hoses. Position the vehicle on level ground so both the truck and generator set are in a straight line. The following procedures apply to this load:
  - **Preparation.** Prepare the load using the following steps:
    - Fold mirrors forward in front of the windshield and tie together with Type III nylon cord. Remove the doors and secure to the seats with Type III nylon cord.
    - Ensure the shelter is secured to the vehicle using wire rope or tie-down straps. Secure all loose equipment inside the shelter with tape, Type III nylon cord, or tie-down straps. Close and secure the door.
    - Secure all equipment and cargo inside the truck with tie-down straps, tape, or Type III nylon cord.
    - Ensure the fuel tanks are not over 3/4 full. Inspect the fuel tank cap, oil filler cap, and battery caps for proper installation.
    - Engage the vehicle parking brake and put the transmission in neutral.
    - Ensure the front wheels are pointed straight ahead. Tie down the steering wheel, using the securing device attached under the dashboard.

- Install the lift provisions on the outer ends of the rear bumper by removing the tiedown provisions located on the front bumper and installing on the outer ends of the front bumper and installing on the outer ends of the rear bumper.
- Partially retract all landing legs and secure in position with Type III nylon cord.
- Retract the lunette leg and secure with Type III nylon cord.
- Secure all lids, doors, and caps with tape or Type III nylon cord.
- Ensure the parking brake is set.
- Route the hook portion of a CGU-1/B tiedown strap through the left rear inboard tiedown provision located near the pintle on the rear bumper of the truck and through the mounting bracket on the front of the trailer A-frame. Connect the hook to the ratchet of the CGU-1/B.
- Repeat the above procedure on the right side of the load.
- Tighten both CGU-1/B tie-down straps at the same time. Secure the excess strap and safety the ratchet handles in the closed position with tape.
- Connect one additional chain length to each chain on each sling set with a coupling link.

- **Rigging.** Rig the load according to the steps in Figure 5-3.
- **Hookup.** Two hookup teams are required for this load. The static wand person discharges the static electricity with the static wand. The forward hookup person kneels on top of the shelter and places apex fitting 1 onto the forward cargo hook. The aft hookup person stands on the generator fender and places apex fitting 2 onto the aft cargo hook. The hookup team then carefully dismounts the trailer and remains close to the load as the helicopter removes slack from the sling legs. When successful hookup is assured, the hookup team quickly exits the area underneath the helicopter to the designated rendezvous point.
- **Derigging.** Derigging is the reverse of the preparation and rigging procedures.

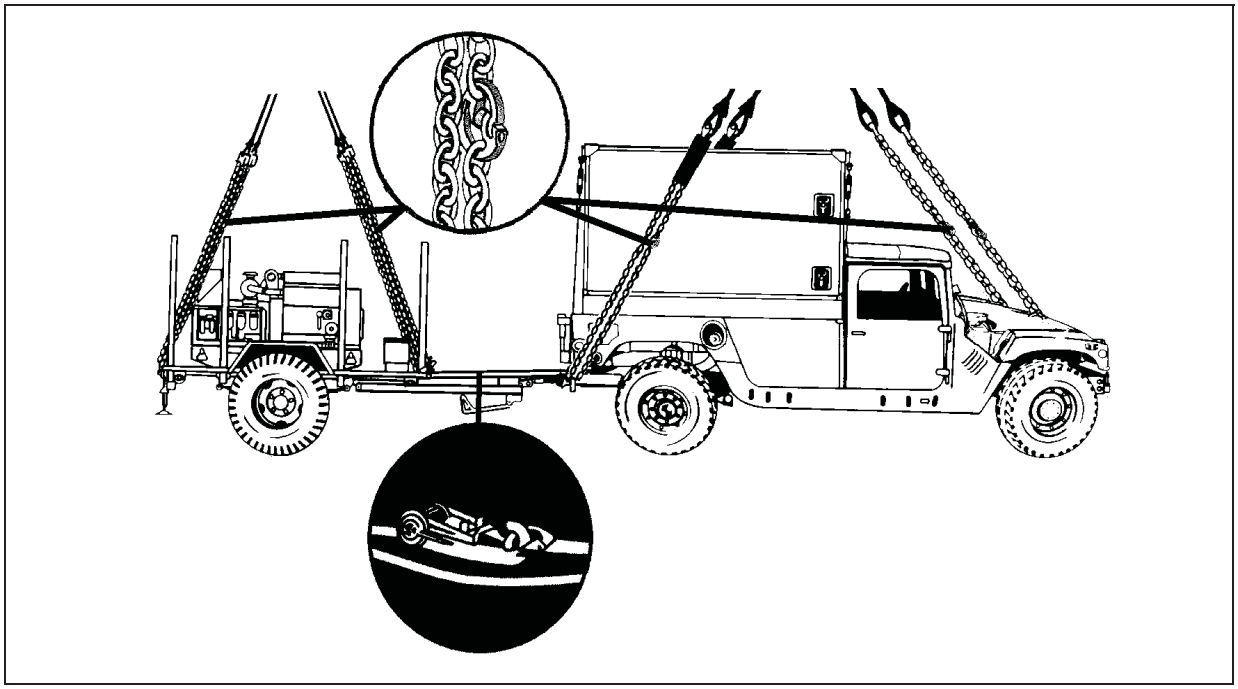

Figure 5-3. M1037 Shelter Carrier with S250/S-250E Shelter and M116A2 Trailer Mounted Generators

RIGGING STEPS
1. Position the apex fitting of sling set 1 on top of the shelter. Route outer sling legs 1 and 2 to the front of the vehicle and inner sling legs 3 and 4 to the rear. Sling legs 1 and 3 must be on the left side of the load. 2. Loop the chain end of sling leg 1 through the left front lift provision that protrudes through the hood. Place the correct link from Table 5-3 in the grab hook. Repeat with sling leg 2 and the right front lift provision. Secure excess chain with tape or Type III nylon cord. 3. Loop the chain end of the sling legs through their respective lift provisions located on the outer ends of the rear bumper. Place the correct link from Table 5-3 in the grab hook. Secure excess chain with tape or Type III nylon cord. 4. Pad the chain where it contacts the shelter sides. 5. Cluster and tie (breakaway technique) all sling legs together on top of the vehicle to prevent entanglement during hookup and lift-off. 6. Position the apex fitting of sling set 2 on top of the generator set. Route outer sling legs 1and 2 between the two front bows to the front of the generator and inner sling legs 3 and 4 between the two rear bows to the rear of the generator. Sling legs 1 and 3 must be on the left side of the load. 7. Loop the chain end of sling leg 1 through the left front lift provision located on the front of the trailer. Place the correct link from Table 5-3 in the grab hook. Repeat with sling leg 2 through the right front lift provision. Secure excess chain with tape or Type III nylon cord. 8. Loop the chain end of sling leg 3 through the left rear lift provision. Place the correct link from Table 5-3 in the grab hook. Repeat with sling leg 4 through the right rear lift provision. Secure excess chain with tape or Type III nylon cord. 9. Tie sling leg 1 to the front bow of the trailer (breakaway technique) to prevent entanglement with the cable reel handle. 10. Cluster and tie (breakaway technique) all sling legs together on top of the trailer to prevent entanglement during hookup and lift-off.

Figure 5-3. M1037 Shelter Carrier with S250/S-250E Shelter and M116A2 Trailer Mounted Generators (Continued)

M998/M1038 TRUCK, UTILITY, 1-1/4 TON (HMMWV) AND G-85/TPQ-36 (V)7 GENERATOR GROUP ON M116A2 MODIFIED TRAILER

5-5. The M998/M1038 truck, utility, 1-1/4 ton (HMMWV) and G-85/TPQ-36 (V)7 generator group on M116A2 modified trailer are rigged for dual-point sling load using the following procedures:

- **Applicability.** The following items in Table 5-4 are certified for the helicopter(s) listed in the following table by the US Army Natick Soldier Center:

Table 5-4. M998/M1038 Truck, Utility, 1-1/4 Ton and G-85/TPQ-36 (V)7 Generator Group

Nomenclature	*Max Weight (Pounds)*	*Sling Set*	*Link Count Front/Rear*	*Type of Aircraft*
Truck, 1 ¼-Ton, HMMWV, M998/M1038	7,000	10K	79/3	CH-47
G-85/TPQ-36 (V) 7 Generator Trailer Group	3,475	10K	52/36	CH-47

- **Materials.** The following materials are required to rig this load:
  - Sling set (10,000-pound capacity) (2 each).
  - Tape, adhesive, pressure-sensitive, 2-inch wide roll.
  - Cord, nylon, Type III, 550-pound breaking strength.
  - Webbing, cotton, 1/4-inch, 80-pound breaking strength.
  - Strap, cargo, tie-down, CGU-1/B (2 each, or more as required to secure cargo).
  - Felt sheet, cattle hair, Type IV, 1/2-inch or suitable substitute.
- **Personnel.** Two persons can prepare and rig the HMMWV in 15 minutes. Two persons can prepare and rig the generator set in 10 minutes.
- **Procedures.** Attach the generator set to the truck by placing the lunette on the pintle hook and securing the latch. Secure the safety chains, cables, and hoses. Position the vehicle on level ground so both the truck and generator set are in a straight line. The following procedures apply to this load:
  - **Preparation.** Prepare the load using the following steps:
    - Fold mirrors forward in front of the windshield and tie together with Type III nylon cord. Remove the doors and secure to the seats with Type III nylon cord.
    - Secure all equipment and cargo inside the truck with tiedown straps, tape, or Type III nylon cord.
    - Ensure the fuel tanks are not over 3/4 full. Inspect the fuel tank cap, oil filler cap, and battery caps for proper installation.
    - Engage the vehicle parking brake and put the transmission in neutral.
    - Ensure the front wheels are pointed straight ahead. Tie down the steering wheel, using the securing device attached under the dashboard.

- Retract the lunette leg and secure with Type III nylon cord.
- Secure all lids, doors, and caps with tape or Type III nylon cord.
- Ensure the trailer parking brakes are set.
- Route the hook portion of a CGU-1/B tiedown strap through the left rear inboard tiedown provision located near the pintle on the rear bumper of the truck and through the mounting bracket on the front of the trailer A-frame. Connect the hook to the ratchet of the CGU-1/B.
- Repeat the above procedure on the right side of the load.
- Tighten both CGU-1/B tiedown straps at the same time. Secure the excess strap and safety the ratchet handles in the closed position with tape.

■ **Rigging.** Rig the load according to the steps in Figure 5-4.

■ **Hookup.** Two hookup teams are required for this load. The static wand person discharges the static electricity with the static wand. The forward hookup person stands in the bed of the truck and places apex fitting 1 onto the forward cargo hook. The aft hookup person stands on the generator fender and places apex fitting 2 onto the aft cargo hook. The hookup team then carefully dismounts the trailer and remains close to the load as the helicopter removes slack from the sling legs. When successful hookup is assured, the hookup team quickly exits the area underneath the helicopter to the designated rendezvous point.

■ **Derigging**. Derigging is the reverse of the preparation and rigging procedures.

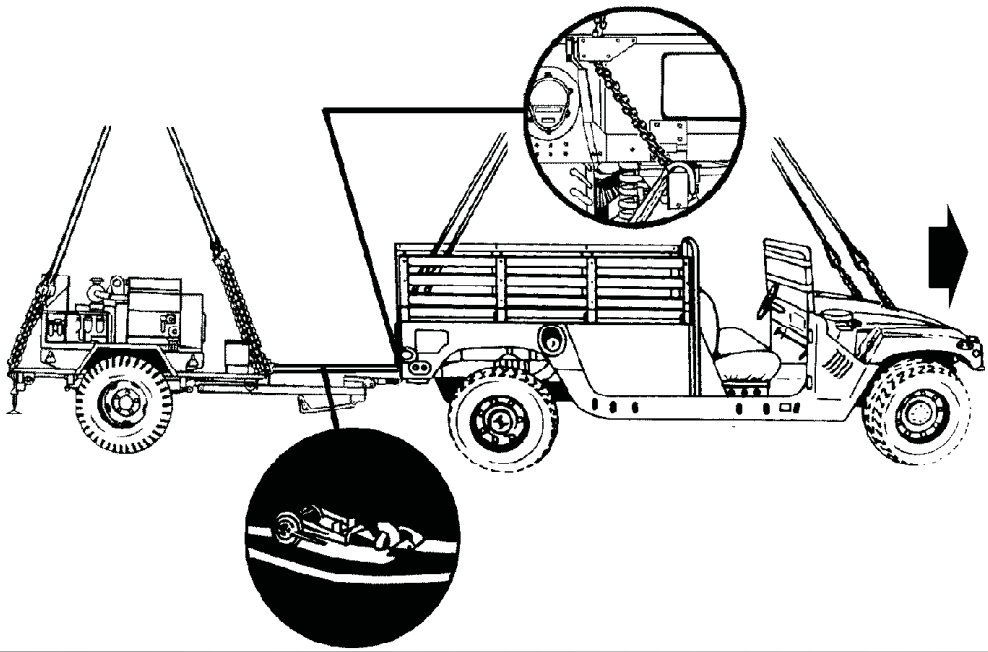

RIGGING STEPS

1. Position the apex fitting of sling set 1 in the bed of the vehicle. Route outer sling legs 1and 2 to the front of the vehicle and inner sling legs 3 and 4 to the rear. Sling legs 1 and 3 must be on the left side of the load.

2. Loop the chain end of sling leg 1 through the left front lift provision that protrudes through the hood. Place the correct link from Table 5-4 in the grab hook. Repeat with sling leg 2 and the right front lift provision. Secure excess chain with tape or Type III nylon cord.

3. Route the chain end of sling leg 3 through the sling guide in the upper left corner of the tailgate. Loop the chain end through the left lift provision on the bumper and thread back through the sling guide in the tailgate. Place the correct link from Table 5-4 in the grab hook. Repeat with sling leg 4 and the right rear lift provision.

4. Cluster and tie (breakaway technique) all sling legs together on top of the vehicle to prevent entanglement during hookup and lift-off.

5. Position apex fitting of sling set 2 on the trailer but not on top of the generator. Route outer sling legs 1and 2 to the front of the trailer and inner sling legs 3 and 4 to the rear. Sling legs 1 and 3 must be on the left side of the load.

6. Loop the chain end of sling leg 1 through the left front lift provision located near the A-frame on the front of the trailer. Place the correct link from Table 5-4 in the grab hook. Repeat with sling leg 2 through the right front lift provision. Secure excess chain with tape or Type III nylon cord.

7. Route the chain end of sling leg 3 through the left rear lift provision. Place the correct link from Table 5-4 in the grab hook. Repeat with sling leg 4 through the right rear lift provision. Secure excess chain with tape or Type III nylon cord.

Figure 5-4. M998/M1038 Truck, Utility, 1-1/4 Ton and G-85/TPQ-36 (V)7 Generator Group

RIGGING STEPS (Continued)
8. Pad the chains where they contact the load.
9. Cluster and tie (breakaway technique) all sling legs together on top of the trailer to prevent entanglement during hookup and lift-off.

Figure 5-4. M998/M1038 Truck, Utility, 1-1/4 Ton and G-85/TPQ-36 (V)7 Generator Group (Continued)

M1097 TRUCK, UTILITY, 1-1/4 TON (HMMWV) WITH PALLET GROUP OA-9134/TSC, ANTENNA AS-3036/TSC AND PU-753 GENERATOR SET ON M116A2 TRAILER

5-6. The M1097 truck, utility, 1-1/4 ton with pallet group OA-9134/TSC, antenna AS-3036/TSC and PU-753 generator set on M116A2 trailer are rigged for dual-point sling load using the following procedures:

- **Applicability.** The following items in Table 5-5 are certified for the helicopter(s) listed in the following table by the US Army Natick Soldier Center:

Table 5-5. M1097 Truck, Utility, 1-1/4 Ton with Pallet Group OA-9134/TSC, Antenna AS-3036/TSC and PU-753 Generator Set on M116A2 Trailer

Nomenclature	*Max Weight (Pounds)*	*Sling Set*	*Link Count Front/Rear*	*Type of Aircraft*
Truck, Utility1 ¼-Ton, HMMWV, M1097 with Pallet Group OA-9134/TSC, Antenna AS-3036/TSC	7,120	25K	62/3	CH-47
PU-753 Generator Set on M116A2 Trailer	3,000	25K	70/54	CH-47

- **Materials.** The following materials are required to rig this load:
  - Sling set (25,000-pound capacity) (2 each).
  - Tape, adhesive, pressure-sensitive, 2-inch wide roll.
  - Cord, nylon, Type III, 550-pound breaking strength.
  - Webbing, cotton, 1/4-inch, 80-pound breaking strength.
  - Strap, cargo, tie-down, CGU-1/B (2 each, or more as required to secure cargo).
  - Felt sheet, cattle hair, Type IV, 1/2-inch or suitable substitute.
  - Spreader bar assembly NSN: 4910-01-313-8839.
  - Reach pendant, 11,000- or 25,000-pound capacity (2 each).
- **Personnel.** Two persons can prepare and rig the M1097 HMMWV in 15 minutes. Two persons can prepare and rig the generator set in 10 minutes.
- **Procedures.** Attach the generator set to the truck by placing the lunette on the pintle hook and securing the latch. Secure the safety chains, cables, and hoses. Position the vehicle on level ground so both the truck and generator set are in a straight line. The following procedures apply to this load:

- **Preparation.** Prepare the load using the following steps:
  - Fold the mirrors in and tie together with Type III nylon cord. Remove the doors and secure to the seats with Type III nylon cord.
  - Ensure the antenna support structure assembly is secured to the vehicle. Secure all loose equipment inside the antenna support structure with tape, Type III nylon cord, or tiedown straps.
  - Secure all equipment and cargo inside the truck with tie-down straps, tape, or Type III nylon cord.
  - Ensure the fuel tanks are not over 3/4 full. Inspect the fuel tank cap, oil filler cap, and battery caps for proper installation.
  - Engage the vehicle parking brake and put the transmission in neutral.
  - Ensure the front wheels are pointed straight ahead. Tie down the steering wheel, using the securing device attached under the dashboard.
  - Install the lift provisions on the outer ends of the rear bumper by removing the tiedown provisions located on the front bumper and installing on the outer ends of the rear bumper.
  - Partially retract all landing legs and secure in position with Type III nylon cord.
  - Retract the lunette leg and secure with Type III nylon cord.
  - Secure all lids, doors, and caps with tape or Type III nylon cord.
  - Ensure the trailer hand brake is set.
  - Route the hook portion of a CGU-1/B tiedown strap through the left rear inboard tiedown provision located near the pintle on the rear bumper of the truck and through the mounting bracket on the front of the trailer A-frame. Connect the hook to the ratchet of the CGU-1/B.
  - Repeat the above procedure on the right side of the load.
  - Tighten both CGU-1/B tie-down straps at the same time. Secure the excess strap and safety the ratchet handles in the closed position with tape. Tape the CGU-1/B every 24 inches to prevent flapping.
  - Attach one reach pendant on each sling set apex fitting.
- **Rigging.** Rig the load according to the steps in Figure 5-5.
- **Hookup.** Two hookup persons are required for this load. The forward hookup person stands on top of the support structure and places reach pendant 1 onto the forward cargo hook. The aft hookup person stands on the generator fender and places reach pendant 2 onto the aft cargo hook. The hookup team then carefully dismounts the trailer and remains close to the load as the helicopter removes slack from the sling legs. When successful hookup is assured, the hookup team quickly exits the area underneath the helicopter to the designated rendezvous point.

CAUTION

An aircrew member must monitor the spreader bar assembly at all times. If there is any evidence of bending of the spreader bar the load should be set down at the nearest suitable landing area.

- **Derigging.** Derigging is the reverse of the preparation and rigging procedures.

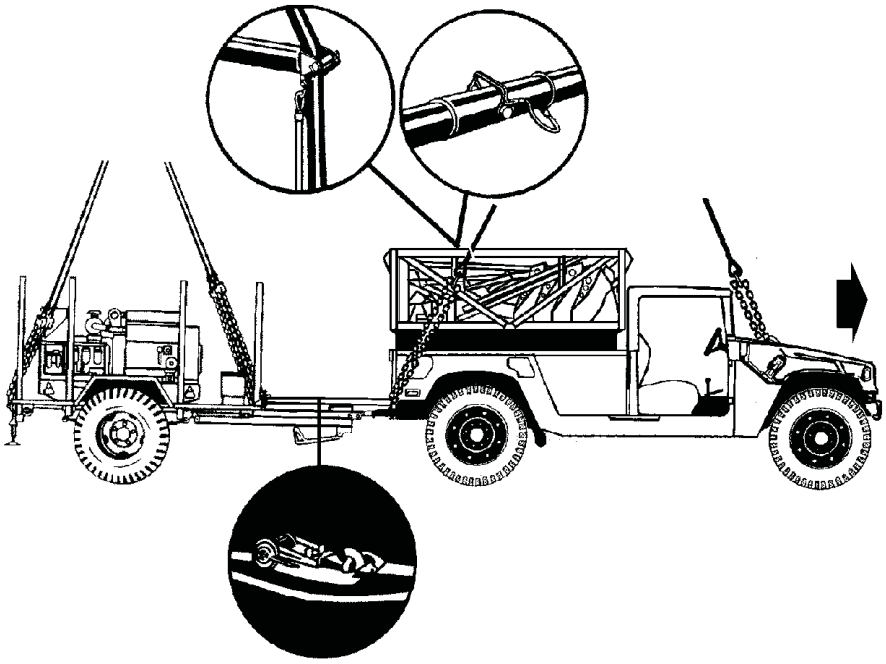

RIGGING STEPS

1. Position apex fitting and reach pendant on top of the antenna support structure assembly. Route outer sling legs 1 and 2 to the front of the vehicle and inner sling legs 3 and 4 to the rear. Sling legs 1 and 3 must be on the left side of the load.

2. Loop the chain end of sling leg 1 through the left front lift provision that protrudes through the hood from inboard to outboard. Place the correct link from Table 5-5 in the grab hook. Repeat with sling leg 2 and the right front lift provision. Secure excess chain with tape or Type III nylon cord.

3. Position the spreader bar assembly 12 inches from the rear of the antenna support structure. Route the rear sling ropes through the guides on the end of the spreader bar. Secure the sling ropes in the guides with the retainer pins and keepers.

4. Route the chain end of sling leg 3 through the lift provision located on the left end of the rear bumper from inboard to outboard. Place the correct link from Table 5-5 in the grab hook. Repeat with sling leg 4 and the right rear lift provision.

5. Remove all slack from sling legs 3 and 4. Install a breakaway tie using 1/4-inch cotton webbing around each leg and around the top bar of the antenna support structure.

CAUTION

Do not use Type III nylon cord to make the breakaway ties.

Figure 5-5. M1097 Truck, Utility, 1-1/4 Ton (HMMWV) with Pallet Group OA-9134/TSC, Antenna AS-3036/TSC and PU-753 Generator Set on M116A2 Trailer

RIGGING STEPS (Continued)

6. Extend the spreader bar retainer cable down the length of the sling leg and secure to the chain with Type III nylon cord.

7. Cluster and tie (breakaway technique) all sling legs together on top of the support structure to prevent entanglement during hookup and lift-off.

8. Position the apex fitting and Reach Pendant of sling set 2 on top of the generator set. Route outer sling legs 1 and 2 between the two front bows to the front of the generator and inner sling legs 3 and 4 between the two rear bows to the rear of the generator. Sling legs 1 and 3 must be on the left side of the load.

9. Loop the chain end of sling leg 1 through the left front lift provision located on the front of the trailer. Place the correct link from Table 5-5 in the grab hook. Repeat with sling leg 2 through the right front lift provision. Secure excess chain with tape or Type III nylon cord.

10. Loop the chain end of sling leg 3 through the left rear lift provision. Place the correct link from Table 5-5 in the grab hook. Repeat with sling leg 4 through the right rear lift provision. Secure excess chain with tape or Type III nylon cord.

11. Pad the chains where they contact the load.

12. Cluster and tie or tape (breakaway technique) all sling legs together on top of the trailer to prevent entanglement during hookup and lift-off.

Figure 5-5. M1097 Truck, Utility, 1-1/4 Ton (HMMWV) with Pallet Group OA-9134/TSC, Antenna AS-3036/TSC and PU-753 Generator Set on M116A2 Trailer (Continued)

M1097 SHELTER CARRIER, 1-1/4 TON (HMMWV) WITH AN/TPQ-36 (V) 7, (S-250 SHELTER), OPERATIONS CONTROL GROUP AND RADAR SET ANTENNA MOUNTED ON M116A2 TRAILER

5-7. The M1097 shelter carrier, 1-1/4 ton with AN/TPQ-36 (V) 7, (S-250 shelter), operations control group and radar set antenna mounted on M116A2 trailer are rigged for dual-point sling load using the following procedures:

- **Applicability.** The following items in Table 5-6 are certified for the helicopter(s) listed in the following table by the US Army Natick Soldier Center:

Table 5-6. M1097 Shelter Carrier, 1-1/4 Ton with AN/TPQ-36 (V) 7, (S-250 Shelter), Operations Control Group and Radar Set Antenna Mounted on M116A2 Trailer

Nomenclature	*Max Weight (Pounds)*	*Sling Set*	*Link Count Front/Rear*	*Type of Aircraft*
Truck, Shelter Carrier, 1 ¼-Ton, M1097 with OKG-398/TPW, Operations Control Group (S-250 Shelter)	8,500	10K	80/30	CH-47
Radar Set Antenna, AN/TPQ-36 (V) 7 on M116A2 Trailer	2,975	10K	68/80	CH-47

- **Materials.** The following materials are required to rig this load:
  - Sling set (10,000-pound capacity) (2 each).
    - Additional chain length, part number 38850-00053-101, from a 10,000-pound capacity sling set (8 each).
    - Additional coupling link, part number 577-0615, from a 10,000-pound sling set (8 each).
  - Tape, adhesive, pressure-sensitive, 2-inch wide roll.
  - Cord, nylon, Type III, 550-pound breaking strength.
  - Webbing, cotton, 1/4-inch, 80-pound breaking strength.
  - Strap, cargo, tie-down, CGU-1/B (2 each, or more as required to secure cargo).
  - Felt sheet, cattle hair, Type IV, 1/2-inch or suitable substitute.
  - Plywood, 4 feet x 8 feet x 3/4 inches.
  - Reach pendant, 11,000- or 25,000-pound capacity (2 each).
  - Heater hose, 3/4-inch (as required).
- **Personnel.** Two persons can prepare and rig the M1097 HMMWV in 15 minutes. Two persons can prepare and rig the antenna trailer in 20 minutes.

Note. The plywood is a full sheet which is notched to fit around the bracket located at the top of the antenna array. Attach a piece of 3/4-inch heater hose, split lengthwise along the forward edge of the plywood to protect the sling legs from fraying.

- **Procedures.** Attach the antenna trailer to the truck by placing the lunette on the pintle hook and securing the latch. Secure the safety chains, cables, and hoses. Position the vehicle on level ground so both the truck and radar set are in a straight line. The following procedures apply to this load:
  - **Preparation.** Prepare the load using the following steps:
    - Fold the mirrors in and tie together with Type III nylon cord. Remove the doors and secure to the seats with Type III nylon cord.
    - Secure all loose equipment inside the shelter with tape, Type III nylon cord, or tiedown straps.
    - Secure all equipment and cargo inside the truck with tiedown straps, tape, or Type III nylon cord.
    - Ensure the fuel tank is not over 3/4 full. Inspect the fuel tank cap, oil filler cap, and battery caps for proper installation.
    - Engage the vehicle parking brake and put the transmission in neutral.
    - Ensure the front wheels are pointed straight ahead. Tie down the steering wheel, using the securing device attached under the dashboard.
    - Install the lift provisions on the outer ends of the rear bumper by removing the tiedown provisions located on the front bumper and installing on the outer ends of the rear bumper.
    - Raise the landing leg and secure in position with safety pins and tape.
    - Secure all lids, doors, and caps with tape or Type III nylon cord.
    - Ensure the trailer hand brake is set.
    - Place the radar set in the travel mode.
    - Place the sheet of plywood on the top of the antenna, firmly against the BSU. Route and secure a CGU-1/B across the width of the plywood at the center of the array. Hook a second CGU-1/B to the front right tiedown provision located on the front of the right side of the trailer. Route the tiedown diagonally over the plywood and secure the ratchet to the left rear of the stowed ground rod, the lower tiedown provision, or

the trailer frame. Repeat the procedure on the left side of the antenna routing the tiedown diagonally over the plywood.

- Route the hook portion of a CGU-1/B tiedown strap through the left rear inboard tiedown provision located near the pintle on the rear bumper of the truck and through the mounting bracket on the front of the trailer A-frame. Connect the hook to the ratchet of the CGU-1/B.
- Repeat the above procedure on the right side of the load.
- Tighten both CGU-1/B tie-down straps at the same time. Secure the excess strap and safety the ratchet handles in the closed position with tape. Tape the CGU-1/B every 24 inches to prevent flapping.
- Attach one reach pendant on each sling set apex fitting.
- Connect one additional chain length to each chain on each sling set with a coupling link.

- **Rigging.** Rig the load according to the steps in Figure 5-6.
- **Hookup.** Two hookup persons are required for this load. The forward hookup person stands on cab of the truck and places reach pendant 1 onto the forward cargo hook. The aft hookup person stands on the fender of the trailer and places reach pendant 2 onto the aft cargo hook. The hookup team then carefully dismounts the trailer and remains close to the load as the helicopter removes slack from the sling legs. When successful hookup is assured, the hookup team quickly exits the area underneath the helicopter to the designated rendezvous point.
- **Derigging.** Derigging is the reverse of the preparation and rigging procedures.

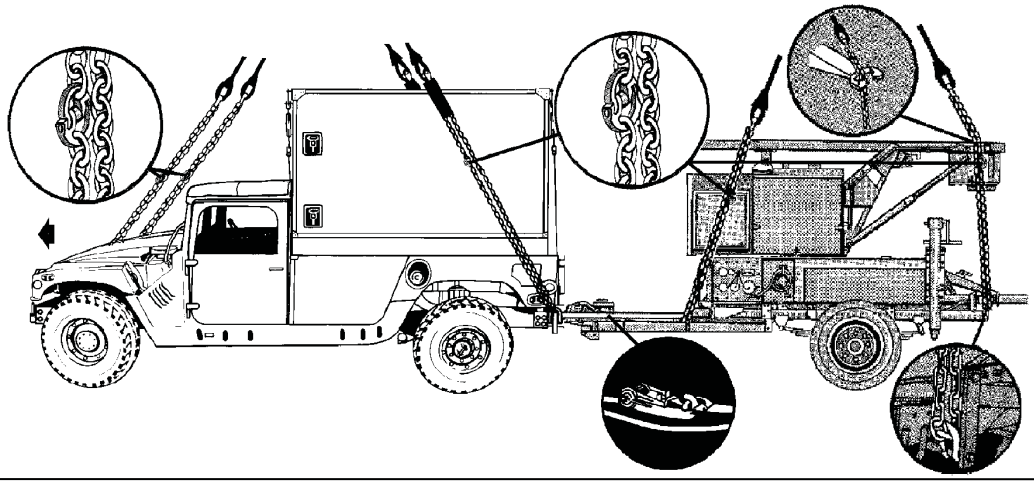

RIGGING STEPS

1. Position apex fitting and reach pendant on top of the truck. Route outer sling legs 1 and 2 to the front of the vehicle and inner sling legs 3 and 4 to the rear. Sling legs 1 and 3 must be on the left side of the load.

2. Loop the chain end of sling leg 1 through the left front lift provision that protrudes through the hood from inboard to outboard. Place the correct link from Table 5-6 in the grab hook. Repeat with sling leg 2 and the right front lift provision. Secure excess chain with tape or Type III nylon cord.

3. Loop the chain end of the sling legs through their respective lift provisions located on the outer ends of the rear bumper. Place the correct link from Table 5-6 in the grab hook. Secure excess chain with tape or Type III nylon cord.

Figure 5-6. M1097 Shelter Carrier, 1-1/4 Ton (HMMWV) with AN/TPQ-36 (V) 7, (S-250 Shelter), Operations Control Group and Radar Set Antenna Mounted on M116A2 Trailer

RIGGING STEPS (Continued)

4. Pad the chain where it contacts the shelter sides.

5. Cluster and tie (breakaway technique) all sling legs together on top of the vehicle to prevent entanglement during hookup and lift-off.

6. Position the apex fitting of sling set 2 on top of the trailer but not on top of the radar panel. Route outer sling legs 1 and 2 to the front of the trailer and inner sling legs 3 and 4 to the rear of the trailer Sling legs 1 and 3 must be on the left side of the load.

7. Loop the chain end of sling leg 1 through the left front lift provision located on the front of the trailer near the A-frame. Place the correct link from Table 5-6 in the grab hook. Remove the slack from the sling leg and pad the sling/chain where it contacts the antenna and plywood. Secure the sling leg with a breakaway tie routed through a hole drilled in the plywood. Repeat with sling leg 2 through the right front lift provision. Secure excess chain with tape or Type III nylon cord.

8. Loop the chain end of sling leg 3 through the left rear lift provision (the upper shackle on the deck frame). Place the correct link from Table 5-6 in the grab hook. Remove the slack from the sling leg and pad the sling/chain where it contacts the sling leg guide on the antenna. Place the sling leg in the guide and secure with a breakaway tie. Repeat with sling leg 4 through the right rear lift provision. Secure excess chain with tape or Type III nylon cord.

9. Cluster and tie (breakaway technique) all sling legs together on top of the trailer to prevent entanglement during hookup and lift-off.

Figure 5-6. M1097 Shelter Carrier, 1-1/4 Ton (HMMWV) with AN/TPQ-36 (V) 7, (S-250 Shelter), Operations Control Group and Radar Set Antenna Mounted on M116A2 Trailer (Continued)

M1097, 1-1/4 TON (HMMWV) WITH GENERATOR PALLET GROUP, G-86-TPQ-36 (V)7, AND RADAR SET ANTENNA MOUNTED ON M116A2 TRAILER

5-8. The M1097, 1-1/4 ton with generator pallet group, G-86-TPQ-36 (V)7, and radar set antenna mounted on M116A2 trailer are rigged for dual-point sling load using the following procedures:

- **Applicability.** The following items in Table 5-7 are certified for the helicopter(s) listed in the following table by the US Army Natick Soldier Center:

Table 5-7. M1097, 1-1/4 Ton (HMMWV) with Generator Pallet Group, G-86-TPQ-36 (V)7, and Radar Set Antenna Mounted on M116A2 Trailer

Nomenclature	*Max Weight (Pounds)*	*Sling Set*	*Link Count Front/Rear*	*Type of Aircraft*
Truck, Utility, 1 ¼-Ton, M1097 with Generator Pallet Group, G-86-TPQ-36 (V) 7	7,400	10K	80/30	CH-47
Radar Set Antenna, AN/TPQ-36 (V) 7 on M116A2 Trailer	2,975	10K	68/80	CH-47

- **Materials.** The following materials are required to rig this load:
  - Sling set (10,000-pound capacity) (2 each).
  - Tape, adhesive, pressure-sensitive, 2-inch wide roll.
  - Cord, nylon, Type III, 550-pound breaking strength.
  - Webbing, cotton, 1/4-inch, 80-pound breaking strength.
  - Strap, cargo, tie-down, CGU-1/B (5 each).
  - Felt sheet, cattle hair, Type IV, 1/2-inch or suitable substitute.
  - Plywood, 4 feet x 8 feet x 3/4 inches.
  - Reach pendant, 11,000- or 25,000-pound capacity (2 each).
  - Heater hose, 3/4-inch (as required).
- **Personnel.** Two persons can prepare and rig the M1097 HMMWV in 15 minutes. Two persons can prepare and rig the antenna trailer in 20 minutes.

Note. The plywood is a full sheet which is notched to fit around the bracket located at the top of the antenna array. Attach a piece of 3/4-inch heater hose, split lengthwise along the forward edge of the plywood to protect the sling legs from fraying.

- **Procedures.** Attach the antenna trailer to the truck by placing the lunette on the pintle hook and securing the latch. Secure the safety chains, cables, and hoses. Position the vehicle on level ground so both the truck and radar set are in a straight line. The following procedures apply to this load:
  - **Preparation.** Prepare the load using the following steps:
    - Fold the mirrors in and tie together with Type III nylon cord. Remove the doors and secure to the seats with Type III nylon cord.
    - Secure all equipment and cargo inside the truck with tiedown straps, tape, or Type III nylon cord.
    - Ensure the fuel tanks are not over 3/4 full. Inspect the fuel tank cap, oil filler cap, and battery caps for proper installation.
    - Engage the vehicle parking brake and put the transmission in neutral.
    - Ensure the front wheels are pointed straight ahead. Tie down the steering wheel, using the securing device attached under the dashboard.
    - Install the lift provisions on the outer ends of the rear bumper by removing the tiedown provisions located on the front bumper and installing on the outer ends of the rear bumper.
    - Raise the landing leg and secure in position with safety pins and tape.
    - Secure all lids, doors, and caps with tape or Type III nylon cord.
    - Ensure the trailer hand brake is set.
    - Place the radar set in the travel mode.
    - Place the sheet of plywood on the top of the antenna, firmly against the BSU. Route and secure a CGU-1/B across the width of the plywood at the center of the array. Hook a second CGU-1/B to the front right tie-down provision located on the front of the right side of the trailer. Route the tiedown diagonally over the plywood and secure the ratchet to the left rear of the stowed ground rod, the lower tiedown provision, or the trailer frame. Repeat the procedure on the left side of the antenna routing the tiedown diagonally over the plywood.
    - Route the hook portion of a CGU-1/B tiedown strap through the left rear inboard tiedown provision located near the pintle on the rear bumper of the truck and through the mounting bracket on the front of the trailer A-frame. Connect the hook to the ratchet of the CGU-1/B.
    - Repeat the above procedure on the right side of the load.

- Tighten both CGU-1/B tie-down straps at the same time. Secure the excess strap and safety the ratchet handles in the closed position with tape. Tape the CGU-1/B every 24 inches to prevent flapping.
- Attach one reach pendant on each sling set apex fitting.

- **Rigging.** Rig the load according to the steps in Figure 5-7.
- **Hookup.** Two hookup persons are required for this load. The forward hookup person stands on cab of the truck and places reach pendant 1 onto the forward cargo hook. The aft hookup person stands on the fender of the trailer and places reach pendant 2 onto the aft cargo hook. The hookup team then carefully dismounts the trailer and remains close to the load as the helicopter removes slack from the sling legs. When successful hookup is assured, the hookup team quickly exits the area underneath the helicopter to the designated rendezvous point.
- **Derigging.** Derigging is the reverse of the preparation and rigging procedures.

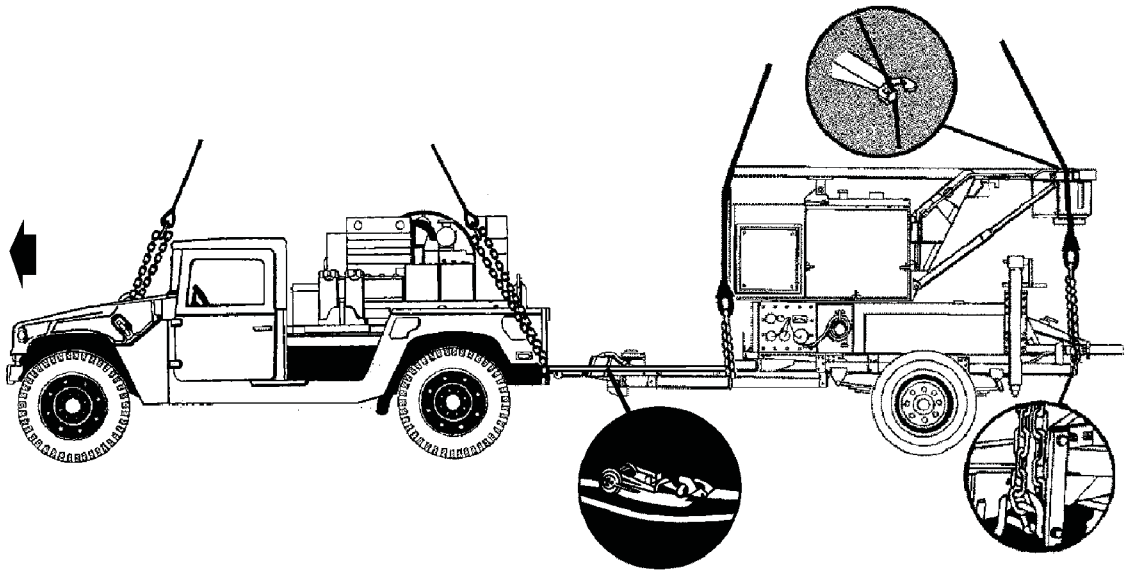

RIGGING STEPS

1. Position apex fitting and reach pendant on top of the truck. Route outer sling legs 1 and 2 to the front of the vehicle and inner sling legs 3 and 4 to the rear. Sling legs 1 and 3 must be on the left side of the load.

2. Loop the chain end of sling leg 1 through the left front lift provision that protrudes through the hood from inboard to outboard. Place the correct link from Table 5-7 in the grab hook. Repeat with sling leg 2 and the right front lift provision. Secure excess chain with tape or Type III nylon cord.

3. Loop the chain end of the sling legs through their respective lift provisions located on the outer ends of the rear bumper. Place the correct link from Table 5-7 in the grab hook. Secure excess chain with tape or Type III nylon cord.

4. Cluster and tie (breakaway technique) all sling legs together on top of the vehicle to prevent entanglement during hookup and lift-off.

Figure 5-7. M1097, 1-1/4 Ton (HMMWV) with Generator Pallet Group, G-86-TPQ-36 (V)7, and Radar Set Antenna Mounted on M116A2 Trailer

RIGGING STEPS (Continued)

5. Position the apex fitting of sling set 2 on top of the trailer but not on top of the radar panel. Route outer sling legs 1 and 2 to the front of the trailer and inner sling legs 3 and 4 to the rear of the trailer Sling legs 1 and 3 must be on the left side of the load.

6. Loop the chain end of sling leg 1 through the left front lift provision located on the front of the trailer near the A-frame. Place the correct link from Table 5-7 in the grab hook. Remove the slack from the sling leg and pad the sling/chain where it contacts the antenna and plywood. Secure the sling leg with a breakaway tie routed through a hole drilled in the plywood. Repeat with sling leg 2 through the right front lift provision. Secure excess chain with tape or Type III nylon cord.

7. Loop the chain end of sling leg 3 through the left rear lift provision (the upper shackle on the deck frame). Place the correct link from Table 5-7 in the grab hook. Remove the slack from the sling leg and pad the sling/chain where it contacts the sling leg guide on the antenna. Place the sling leg in the guide and secure with a breakaway tie. Repeat with sling leg 4 through the right rear lift provision. Secure excess chain with tape or Type III nylon cord.

8. Pad the chains or sling legs where they contact the load.

9. Cluster and tie (breakaway technique) all sling legs together on top of the trailer to prevent entanglement during hookup and lift-off.

Figure 5-7. M1097, 1-1/4 Ton (HMMWV) with Generator Pallet Group, G-86-TPQ-36 (V)7, and Radar Set Antenna Mounted on M116A2 Trailer (Continued)

M1037 SHELTER CARRIER, 1-1/4 TON (HMMWV) WITH AN/TPQ-36, (S-250 SHELTER), OPERATIONS CONTROL GROUP AND RADAR SET ANTENNA MOUNTED ON M103A1 TRAILER

5-9. The M1037 shelter carrier, 1-1/4 ton with AN/TPQ-36, (S-250 shelter), operations control group and radar set antenna mounted on M103A1 trailer are rigged for dual-point sling load using the following procedures:

- **Applicability.** The following items in Table 5-8 are certified for the helicopter(s) listed in the following table by the US Army Natick Soldier Center:

Table 5-8. M1037 Shelter Carrier, 1-1/4 Ton with AN/TPQ-36, (S-250 Shelter), Operations Control Group and Radar Set Antenna Mounted on M103A1 Trailer

Nomenclature	*Max Weight (Pounds)*	*Sling Set*	*Link Count Front/Rear*	*Type of Aircraft*
Truck, 1 ¼-Ton, M1037 with AN/TPQ-36, S-250 Shelter	8,800	10K	52/3	CH-47
Antenna, Radar, AN/TPQ-36 Mounted on M103A1 Trailer	4,100	10K	20/20	CH-47

- **Materials.** The following materials are required to rig this load:
  - Sling set (10,000-pound capacity) (2 each).
    - Additional chain length, part number 38850-00053-101, from a 10,000-pound capacity sling set (8 each).
    - Additional coupling link, part number 577-0615, from a 10,000-pound sling set (8 each).
  - Tape, adhesive, pressure-sensitive, 2-inch wide roll.
  - Cord, nylon, Type III, 550-pound breaking strength.
  - Webbing, cotton, 1/4-inch, 80-pound breaking strength.
  - Strap, cargo, tiedown, CGU-1/B (5 each).
  - Felt sheet, cattle hair, Type IV, 1/2-inch or suitable substitute.
  - Plywood, 4 feet x 8 feet x 3/4 inches.
  - Reach pendant, 11,000- or 25,000-pound capacity (2 each).
- **Personnel.** Two persons can prepare and rig the M1037 HMMWV in 15 minutes. Two persons can prepare and rig the antenna trailer in 20 minutes.

Note. The plywood is a full sheet which is notched to fit around the bracket located at the top of the antenna array.

- **Procedures.** Attach the antenna trailer to the truck by placing the lunette on the pintle hook and securing the latch. Secure the safety chains, cables, and hoses. Position the vehicle on level ground so both the truck and trailer are in a straight line. The following procedures apply to this load:
  - **Preparation.** Prepare the load using the following steps:
    - Fold the mirrors in and tie together with Type III nylon cord. Remove the doors and secure to the seats with Type III nylon cord.
    - Ensure the shelter is secured to the vehicle with wire rope or tiedown assemblies. Secure all loose equipment inside the shelter with tape, Type III nylon cord, or tiedown straps.
    - Secure all equipment and cargo inside the truck with tiedown straps, tape, or Type III nylon cord.
    - Ensure the fuel tank is not over 3/4 full. Inspect the fuel tank cap, oil filler cap, and battery caps for proper installation.
    - Engage the vehicle parking brake and put the transmission in neutral.
    - Ensure the front wheels are pointed straight ahead. Tie down the steering wheel, using the securing device attached under the dashboard.
    - Install the lift provisions on the outer ends of the rear bumper by removing the tiedown provisions located on the front bumper and installing on the outer ends of the rear bumper. Place the lift provisions in the up position.
    - Pad and tape the trailer A-frame on the areas where the lunette handles are located.
    - Raise the landing leg and secure in position with safety pins and tape.
    - Secure all lids, doors, and caps with tape or Type III nylon cord.
    - Ensure the trailer hand brake is set.
    - Place the radar set in the travel mode.
    - Place the sheet of plywood on the top of the antenna, firmly against the BSU. Route and secure a CGU-1/B across the width of the plywood at the center of the array. Hook a second CGU-1/B to the front right tiedown provision located on the front of the right side of the trailer. Route the tiedown diagonally over the plywood and secure the ratchet to the left rear of the stowed ground rod, the lower tiedown provision, or

the trailer frame. Repeat the procedure on the left side of the antenna routing the tiedown diagonally over the plywood.

- Attach the hook portion of a CGU-1/B tie-down strap down to the left front lift provision on the trailer. Connect the ratchet to the left inside tie-down provision located near the pintle.
- Repeat the above procedure on the right side of the load.
- Tighten both CGU-1/B tiedown straps at the same time. Secure the excess strap and safety the ratchet handles in the closed position with tape. Tape the CGU-1/B every 24 inches to prevent flapping.
- Attach one reach pendant on each sling set apex fitting.
- Connect one additional chain length to each chain on each sling set with a coupling link.

■ **Rigging.** Rig the load according to the steps in Figure 5-8.

■ **Hookup.** Two hookup persons are required for this load. The forward hookup person stands on cab of the truck and places reach pendant 1 onto the forward cargo hook. The aft hookup person stands on the fender of the trailer and places reach pendant 2 onto the aft cargo hook. The hookup team then carefully dismounts the trailer and remains close to the load as the helicopter removes slack from the sling legs. When successful hookup is assured, the hookup team quickly exits the area underneath the helicopter to the designated rendezvous point.

■ **Derigging.** Derigging is the reverse of the preparation and rigging procedures.

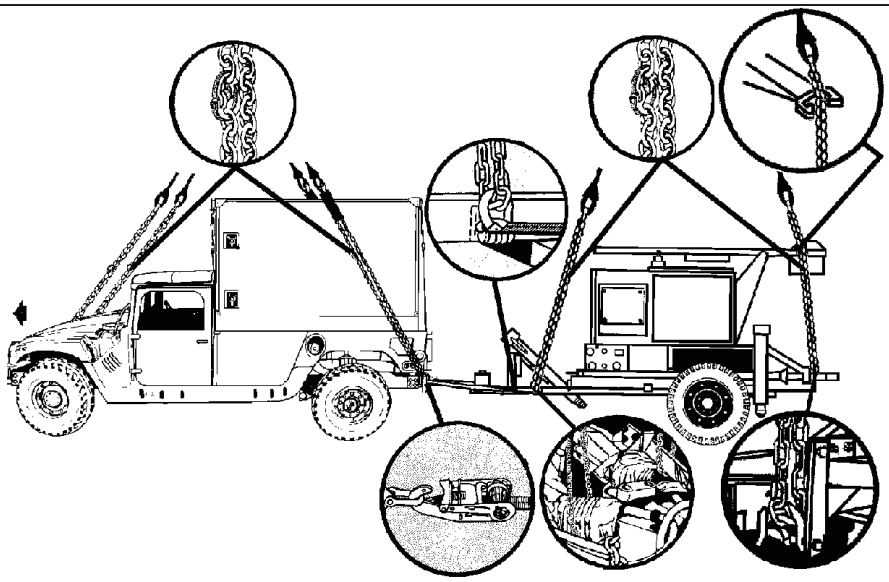

RIGGING STEPS

1. Position apex fitting and reach pendant on top of the shelter. Route outer sling legs 1 and 2 to the front of the vehicle and inner sling legs 3 and 4 to the rear. Sling legs 1 and 3 must be on the left side of the load.

2. Loop the chain end of sling leg 1 through the left front lift provision that protrudes through the hood of the truck. Place the correct link from Table 5-8 in the grab hook. Repeat with sling leg 2 and the right front lift provision. Secure excess chain with tape or Type III nylon cord.

3. Loop the chain end of the sling legs through their respective lift provisions located on the outer ends of the rear bumper. Place the correct link from Table 5-8 in the grab hook.

4. Pad the chain where it contacts the shelter sides.

Figure 5-8. M1037 Shelter Carrier, 1-1/4 Ton with AN/TPQ-36, (S-250 Shelter), Operations Control Group and Radar Set Antenna Mounted on M103A1 Trailer

RIGGING STEPS (Continued)
5. Cluster and tie (breakaway technique) all sling legs together on top of the vehicle to prevent entanglement during hookup and lift-off. 6. Position the apex fitting of sling set 2 on top of the trailer but not on top of the radar panel. Route outer sling legs 1 and 2 to the front of the trailer and inner sling legs 3 and 4 to the rear of the trailer. Sling legs 1 and 3 must be on the left side of the load. 7. Loop the chain end of sling leg 1 around the left side of the lunette in the padded area inside the handle. Place the correct link from Table 5-8 in the grab hook. Ensure the chain is aft of the CGU-1/B tiedown strap. Repeat with sling leg 2 through the right front lift provision. Secure excess chain with tape or Type III nylon cord. 8. Loop the chain end of sling leg 3 through the left rear lift provision. Place the correct link from Table 5-8 in the grab hook. Remove the slack from the sling leg and pad the sling/chain where it contacts the sling leg guide on the antenna. Place the sling leg in the guide and secure with a breakaway tie. Repeat with sling leg 4 through the right rear lift provision. Secure excess chain with tape or Type III nylon cord. 9. Cluster and tie (breakaway technique) all sling legs together on top of the trailer to prevent entanglement during hookup and lift-off.

Figure 5-8. M1037 Shelter Carrier, 1-1/4 Ton with AN/TPQ-36, (S-250 Shelter), Operations Control Group and Radar Set Antenna Mounted on M103A1 Trailer (Continued)

M1097 SHELTER CARRIER (HMMWV) WITH S-250 SHELTER AND TRAILER GENERATOR SETS ON M116A2 TRAILER

5-10. The M1097 shelter carrier with S-250 shelter and trailer generator sets on M116A2 trailer are rigged for dual-point sling load using the following procedures:

- **Applicability.** The following items in Table 5-9 are certified for the helicopter(s) listed in the following table by the US Army Natick Soldier Center:

Table 5-9. M1097 Shelter Carrier (HMMWV) with S-250 Shelter and Trailer Generator Sets on M116A2 Trailer

Nomenclature	*Max Weight (Pounds)*	*Sling Set*	*Link Count Front/Rear*	*Type of Aircraft*
Truck, 1 ¼-Ton, M1097 with AN/TSC-93A, S-250 Shelter	9,769	25K	64/22	CH-47
Pu-753 Generator Set on M116A2 Trailer	3,000	25K	72/56	CH-47
Truck, 1 ¼-Ton, M1097 with S-250 Shelter, LOS (V1)	9,038	25K	60/20	CH-47
Truck, 1 ¼-Ton, M1097 with S-250 Shelter, LOS (V2)	9,038	25K	60/20	CH-47
Truck, 1 ¼-Ton, M1097 with S-250 Shelter, LOS (V3)	9,038	25K	60/20	CH-47
Truck, 1 ¼-Ton, M1097 with S-250 Shelter, LOS (V4)	9,038	25K	60/20	CH-47
PU-751 Generator Set on M116A2 Trailer	3,062	25K	10/15	CH-47

- **Materials.** The following materials are required to rig this load:
  - Sling set (25,000-pound capacity) (2 each).
    - Additional chain length, part number 38850-00053-102, from a 25,000-pound capacity sling set (8 each).
    - Additional coupling link, part number 664241, from a 25,000-pound sling set (8 each).

- Tape, adhesive, pressure-sensitive, 2-inch wide roll.
- Cord, nylon, Type III, 550-pound breaking strength.
- Webbing, cotton, 1/4-inch, 80-pound breaking strength.
- Strap, cargo, tiedown, CGU-1/B (2 each).
- Felt sheet, cattle hair, Type IV, 1/2-inch or suitable substitute.

- **Personnel.** Two persons can prepare and rig the M1097 HMMWV in 15 minutes. Two persons can prepare and rig the generator set in 10 minutes.
- **Procedures.** Attach the generator set to the truck by placing the lunette on the pintle hook and securing the latch with tape or Type III nylon cord. Secure the safety chains, cables, and hoses. Position the vehicle on level ground so both the truck and generator set are in a straight line. The following procedures apply to this load:
  - **Preparation.** Prepare the load using the following steps:
    - Fold mirrors inward and tie together with Type III nylon cord. Remove the doors and secure to the seats with Type III nylon cord.
    - Ensure the shelter is secured to the vehicle using wire rope or tiedown straps. Secure all loose equipment inside the shelter with tape, Type III nylon cord, or tie-down straps. Close and secure the door.
    - Secure all equipment and cargo inside the truck with tiedown straps, tape, or Type III nylon cord.
    - Ensure the fuel tanks are not over 3/4 full. Inspect the fuel tank cap, oil filler cap, and battery caps for proper installation.
    - Engage the vehicle parking brake and put the transmission in neutral.
    - Ensure the front wheels are pointed straight ahead. Tie down the steering wheel, using the securing device attached under the dashboard.
    - Install the lift provisions on the outer ends of the rear bumper by removing the tiedown provisions located on the front bumper and installing on the outer ends of the front bumper and installing on the outer ends of the rear bumper.
    - Partially retract all landing legs and secure in position with Type III nylon cord.
    - Retract the lunette leg and secure with Type III nylon cord.
    - Secure all lids, doors, and caps with tape or Type III nylon cord.
    - Ensure the parking brake is set.
    - Route the hook portion of a CGU-1/B tiedown strap through the left rear inboard tiedown provision located near the pintle on the rear bumper of the truck and through the mounting bracket on the front of the trailer A-frame. Connect the hook to the ratchet of the CGU-1/B.
    - Repeat the above procedure on the right side of the load.
    - Tighten both CGU-1/B tie-down straps at the same time. Secure the excess strap and safety the ratchet handles in the closed position with tape.
    - Connect one additional chain length to each chain on each sling set with a coupling link.
  - **Rigging.** Rig the load according to the steps in Figure 5-9.
  - **Hookup.** Two hookup teams are required for this load. The static wand person discharges the static electricity with the static wand. The forward hookup person kneels on top of the shelter and places apex fitting 1 onto the forward cargo hook. The aft hookup person stands on the generator fender and places apex fitting 2 onto the aft cargo hook. The hookup team then carefully dismounts the trailer and remains close to the load as the helicopter removes slack from the sling legs. When successful hookup is assured, the hookup team quickly exits the area underneath the helicopter to the designated rendezvous point.
  - **Derigging.** Derigging is the reverse of the preparation and rigging procedures.

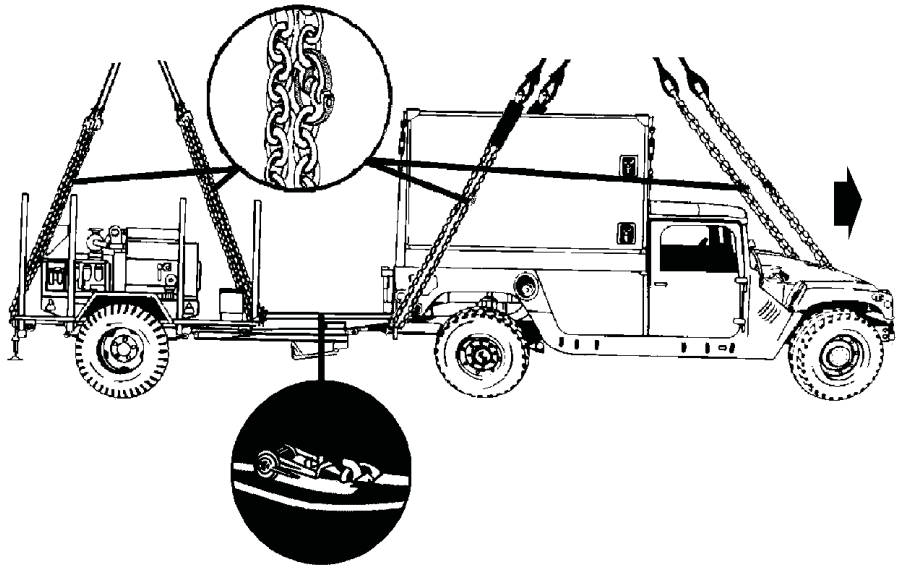

RIGGING STEPS

1. Position apex fitting on top of the shelter. Route outer sling legs 1 and 2 to the front of the vehicle and inner sling legs 3 and 4 to the rear. Sling legs 1 and 3 must be on the left side of the load.

2. Loop the chain end of sling leg 1 through the left front lift provision that protrudes through the hood from inboard to outboard. Place the correct link from Table 5-9 in the grab hook. Repeat with sling leg 2 and the right front lift provision. Secure excess chain with tape or Type III nylon cord.

3. Loop the chain end of the sling legs through their respective lift provisions located on the outer ends of the rear bumper. Place the correct link from Table 5-9 in the grab hook. Secure excess chain with tape or Type III nylon cord.

4. Pad the chain where it contacts the shelter sides.

5. Cluster and tie (breakaway technique) all sling legs together on top of the vehicle to prevent entanglement during hookup and lift-off.

6. Position the apex fitting of sling set 2 on top of the generator set. Route outer sling legs 1and 2 between the two front bows to the front of the generator and inner sling legs 3 and 4 between the two rear bows to the rear of the generator. Sling legs 1 and 3 must be on the left side of the load.

7. Loop the chain end of sling leg 1 through the left front lift provision located on the front of the trailer. Place the correct link from Table 5-9 in the grab hook. Repeat with sling leg 2 through the right front lift provision. Secure excess chain with tape or Type III nylon cord.

8. Loop the chain end of sling leg 3 through the left rear lift provision. Place the correct link from Table 5-9 in the grab hook. Repeat with sling leg 4 through the right rear lift provision. Secure excess chain with tape or Type III nylon cord.

9. Cluster and tie or tape (breakaway technique) all sling legs together on top of the trailer to prevent entanglement during hookup and lift-off.

Figure 5-9. M1097 Shelter Carrier (HMMWV) with S-250 Shelter and Trailer Generator Sets on M116A2 Trailer

M1097 (HMMWV) WITH AN/TSQ-183, COUNTER BATTERY RADAR AND MEP802A GENERATOR ON M116A3 TRAILER

5-11. The M1097 with AN/TSQ-183, counter battery radar and MEP802A generator on M116A3 trailer are rigged for dual-point sling load using the following procedures:

- **Applicability.** The following items in Table 5-10 are certified for the helicopter(s) listed in the following table by the US Army Natick Soldier Center:

Table 5-10. M1097 with AN/TSQ-183 Counter Battery Radar and MEP802A Generator on M116A3 Trailer

Nomenclature	*Max Weight (Pounds)*	*Sling Set*	*Link Count Front/Rear*	*Type of Aircraft*
Truck, 1 ¼-Ton, M1097 with AN/TSQ-183Counter Battery Radar	8,500	10K	80/3	CH-47
MEP802A Generator on M116A3 Trailer	1,580	10K	15/20	CH-47

- **Materials.** The following materials are required to rig this load:
  - Sling set (10,000-pound capacity) (2 each).
  - Tape, adhesive, pressure-sensitive, 2-inch wide roll.
  - Cord, nylon, Type III, 550-pound breaking strength.
  - Webbing, cotton, 1/4-inch, 80-pound breaking strength.
  - Strap, cargo, tiedown, CGU-1/B (4 each).
  - Felt sheet, cattle hair, Type IV, 1/2-inch or suitable substitute.
- **Personnel.** Two persons can prepare and rig the M1097 HMMWV in 15 minutes. Two persons can prepare and rig the generator set in 10 minutes.
- **Procedures.** Attach the generator set to the truck by placing the lunette on the pintle hook and securing the latch with tape or Type III nylon cord. Secure the safety chains, cables, and hoses. Position the vehicle on level ground so both the truck and generator set are in a straight line. The following procedures apply to this load:
  - **Preparation.** Prepare the load using the following steps:
    - Fold mirrors inward and tie together with Type III nylon cord. Remove the doors and secure to the seats with Type III nylon cord.
    - Roll the shelter canvas forward toward the cab. Install the canvas bows over the canvas and secure with tiedowns or Type III nylon cord.
    - Secure all equipment and cargo inside the truck with tiedown straps, tape, or Type III nylon cord.
    - Ensure the fuel tanks are not over 3/4 full. Inspect the fuel tank cap, oil filler cap, and battery caps for proper installation.
    - Engage the vehicle parking brake and put the transmission in neutral.
    - Ensure the front wheels are pointed straight ahead. Tie down the steering wheel, using the securing device attached under the dashboard.
    - Install the lift provisions on the outer ends of the rear bumper by removing the tiedown provisions located on the front bumper and installing on the outer ends of the front bumper and installing on the outer ends of the rear bumper.
    - Retract the lunette leg and secure with Type III nylon cord.
    - Secure all lids, doors, and caps with tape or Type III nylon cord.
    - Ensure the parking brake is set.
    - Route the hook portion of a CGU-1/B tiedown strap through the left rear inboard tiedown provision located near the pintle on the rear bumper of the truck and through the mounting bracket on the front of the trailer A-frame. Connect the hook to the ratchet of the CGU-1/B.

- Repeat the above procedure on the right side of the load.
- Tighten both CGU-1/B tiedown straps at the same time. Secure the excess strap and safety the ratchet handles in the closed position with tape.

- **Rigging.** Rig the load according to the steps in Figure 5-10.
- **Hookup.** Two hookup teams are required for this load. The static wand person discharges the static electricity with the static wand. The forward hookup person kneels on top of the vehicle and places apex fitting 1 onto the forward cargo hook. The aft hookup person stands on the generator fender and places apex fitting 2 onto the aft cargo hook. The hookup team then carefully dismounts the trailer and remains close to the load as the helicopter removes slack from the sling legs. When successful hookup is assured, the hookup team quickly exits the area underneath the helicopter to the designated rendezvous point.
- **Derigging.** Derigging is the reverse of the preparation and rigging procedures.

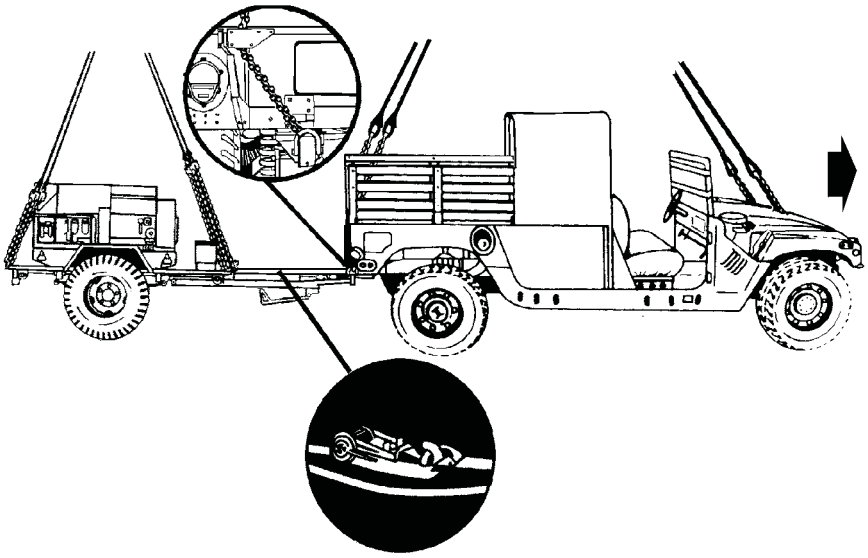

RIGGING STEPS

1. Position apex fitting on top of the truck. Route outer sling legs 1 and 2 to the front of the vehicle and inner sling legs 3 and 4 to the rear. Sling legs 1 and 3 must be on the left side of the load.

2. Loop the chain end of sling leg 1 through the left front lift provision that protrudes through the hood of the vehicle. Place the correct link from Table 5-10 in the grab hook. Repeat with sling leg 2 and the right front lift provision. Secure excess chain with tape or Type III nylon cord.

3. Route the chain end of sling leg 3 through the eyelet opening in the upper left corner of the tailgate. Loop the chain end through the left lift provision on the bumper and thread back through the eyelet opening in the tailgate. Place the correct link from Table 5-10 in the grab hook. Repeat with sling leg 4 and the right rear lift provision.

4. Cluster and tie (breakaway technique) all sling legs together on top of the vehicle to prevent entanglement during hookup and lift-off.

Figure 5-10. M1097 with AN/TSQ-183 Counter Battery Radar and MEP802A Generator on M116A3 Trailer

RIGGING STEPS (Continued)
5. Position the apex fitting of sling set 2 on top of the generator set. Route outer sling legs 1and 2 to the front of the generator and inner sling legs 3 and 4 to the rear of the generator. Sling legs 1 and 3 must be on the left side of the load. 6. Loop the chain end of sling leg 1 through the left front lift provision located on the front of the trailer. Place the correct link from Table 5-10 in the grab hook. Repeat with sling leg 2 through the right front lift provision. Secure excess chain with tape or Type III nylon cord. 7. Loop the chain end of sling leg 3 through the left rear lift provision. Place the correct link from Table 5-10 in the grab hook. Repeat with sling leg 4 through the right rear lift provision. Secure excess chain with tape or Type III nylon cord. 8. Pad the chains where they contact the loads. 9. Cluster and tie (breakaway technique) all sling legs together on top of the trailer to prevent entanglement during hookup and lift-off.

Figure 5-10. M1097 with AN/TSQ-183 Counter Battery Radar and MEP802A Generator on M116A3 Trailer (Continued)

M1097 (HMMWV) WITH AN/TSQ-183, COUNTER BATTERY RADAR AND M101A2 TRAILER

5-12. The M1097 with AN/TSQ-183, counter battery radar and M101A2 trailer are rigged for dual-point sling load using the following procedures:

- **Applicability.** The following items in Table 5-11 are certified for the helicopter(s) listed in the following table by the US Army Natick Soldier Center:

Table 5-11. M1097 with AN/TSQ-183 Counter Battery Radar and M101A2 Trailer

Nomenclature	*Max Weight (Pounds)*	*Sling Set*	*Link Count Front/Rear*	*Type of Aircraft*
Truck, 1 ¼-Ton, M1097 with AN/TSQ-183Counter Battery Radar	8,500	10K	80/3	CH-47
M101A2 Trailer	2,300	10K	15/20	CH-47

- **Materials.** The following materials are required to rig this load:
  - Sling set (10,000-pound capacity) (2 each).
  - Tape, adhesive, pressure-sensitive, 2-inch wide roll.
  - Cord, nylon, Type III, 550-pound breaking strength.
  - Webbing, cotton, 1/4-inch, 80-pound breaking strength.
  - Strap, cargo, tiedown, CGU-1/B (4 each).
  - Felt sheet, cattle hair, Type IV, 1/2-inch or suitable substitute.
- **Personnel.** Two persons can prepare and rig the M1097 HMMWV in 15 minutes. Two persons can prepare and rig the generator set in 10 minutes.

- **Procedures.** Attach the trailer to the truck by placing the lunette on the pintle hook and securing the latch with tape or Type III nylon cord. Secure the safety chains, cables, and hoses. Position the vehicle on level ground so both the truck and trailer are in a straight line. The following procedures apply to this load:
  - **Preparation.** Prepare the load using the following steps:
    - Fold mirrors inward and tie together with Type III nylon cord. Remove the doors and secure to the seats with Type III nylon cord.
    - Roll the shelter canvas forward toward the cab. Install the canvas bows over the canvas and secure with tiedowns or Type III nylon cord.
    - Secure all equipment and cargo inside the truck with tie down straps, tape, or Type III nylon cord.
    - Ensure the fuel tank is not over 3/4 full. Inspect the fuel tank cap, oil filler cap, and battery caps for proper installation.
    - Engage the vehicle parking brake and put the transmission in neutral.
    - Ensure the front wheels are pointed straight ahead. Tie down the steering wheel, using the securing device attached under the dashboard.
    - Install the lift provisions on the outer ends of the rear bumper by removing the tiedown provisions located on the front bumper and installing on the outer ends of the front bumper and installing on the outer ends of the rear bumper.
    - Retract the lunette leg and secure with Type III nylon cord.
    - Ensure the parking brake is set.
    - Remove the trailer rack and place in the bed of the trailer. Place the cargo on top of the rack and secure with CGU-1/B cargo straps by routing the strap diagonally over the cargo.
    - Place the trailer tailgate in the open position and hook the chain in the keeper.
    - Route a CGU-1/B tiedown strap around the bumper on the left side of the rear bumper of the truck, back to and around the left side of the trailer axle. Do not interfere with the hydraulic lines or brake cable on the axle. Attach the hook portion and the ratchet of the CGU-1/B together.
    - Repeat the above procedure on the right side of the load.
    - Tighten both CGU-1/B tiedown straps at the same time. Secure the excess strap and safety the ratchet handles in the closed position with tape.
  - **Rigging.** Rig the load according to the steps in Figure 5-11.
  - **Hookup.** Two hookup teams are required for this load. The static wand person discharges the static electricity with the static wand. The forward hookup person kneels on top of the vehicle and places apex fitting 1 onto the forward cargo hook. The aft hookup person stands on the generator fender and places apex fitting 2 onto the aft cargo hook. The hookup team then carefully dismounts the trailer and remains close to the load as the helicopter removes slack from the sling legs. When successful hookup is assured, the hookup team quickly exits the area underneath the helicopter to the designated rendezvous point.
  - **Derigging.** Derigging is the reverse of the preparation and rigging procedures.

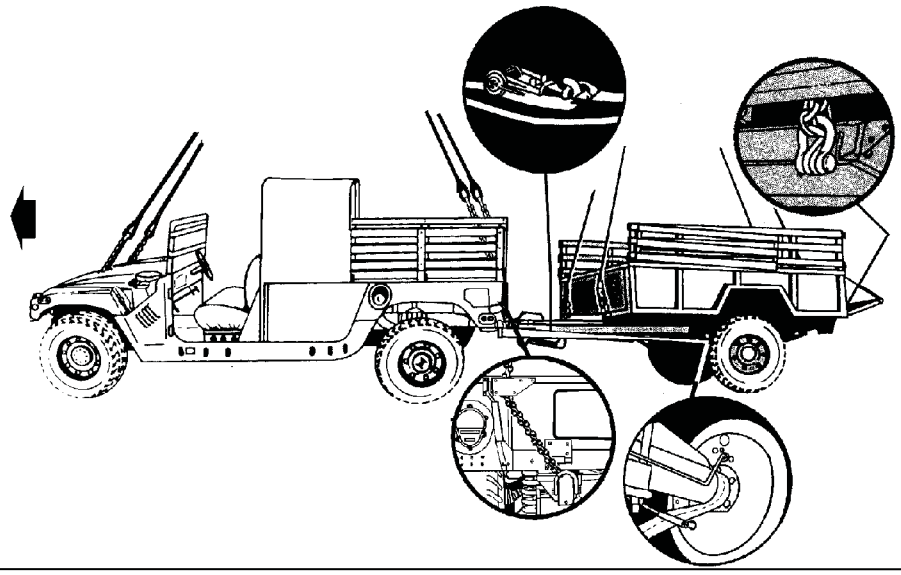

RIGGING STEPS

1. Position apex fitting on top of the truck. Route outer sling legs 1 and 2 to the front of the vehicle and inner sling legs 3 and 4 to the rear. Sling legs 1 and 3 must be on the left side of the load.

2. Loop the chain end of sling leg 1 through the left front lift provision that protrudes through the hood of the vehicle. Place the correct link from Table 5-11 in the grab hook. Repeat with sling leg 2 and the right front lift provision. Secure excess chain with tape or Type III nylon cord.

3. Route the chain end of sling leg 3 through the eyelet opening in the upper left corner of the tailgate. Loop the chain end through the left lift provision on the bumper and thread back through the eyelet opening in the tailgate. Place the correct link from Table 5-11 in the grab hook. Repeat with sling leg 4 and the right rear lift provision.

4. Cluster and tie (breakaway technique) all sling legs together on top of the vehicle to prevent entanglement during hookup and lift-off.

5. Position the apex fitting of sling set 2 on top of the trailer. Route outer sling legs 1and 2 to the front of the trailer and inner sling legs 3 and 4 to the rear of the trailer. Sling legs 1 and 3 must be on the left side of the load.

6. Loop the chain end of sling leg 1 through the left front lift provision located on the front of the trailer. Place the correct link from Table 5-11 in the grab hook. Repeat with sling leg 2 through the right front lift provision. Secure excess chain with tape or Type III nylon cord.

7. Loop the chain end of sling leg 3 through the left rear lift provision. Place the correct link from Table 5-11 in the grab hook. Repeat with sling leg 4 through the right rear lift provision. Secure excess chain with tape or Type III nylon cord.

8. Pad the chains where they contact the loads.

9. Cluster and tie (breakaway technique) all sling legs together on top of the trailer to prevent entanglement during hookup and lift-off.

Figure 5-11. M1097 with AN/TSQ-183 Counter Battery Radar and M101A2 Trailer

JOINT SURVEILLANCE TARGET ATTACK RADAR (JSTAR) SYSTEM, WITH LMS SHELTER AND MISSION TRAILER, HMT WITH GENERATOR

5-13. The joint surveillance target attack radar system, with LMS shelter and mission trailer, HMT with generator are rigged for dual-point sling load using the following procedures:

- **Applicability.** The following items in Table 5-12 are certified for the helicopter(s) listed in the following table by the US Army Natick Soldier Center:

Table 5-12. JSTAR Mission Vehicle and Mission Trailer

Nomenclature	*Max Weight (Pounds)*	*Sling Set*	*Link Count Front/Rear*	*Type of Aircraft*
JSTAR Mission Vehicle, M1097 with LMS Shelter and JSTAR Mission Trailer, HMT with Generator Set	HMMWV-9,530 Trailer-3,690	10K 10K	60/10 40/40	CH-47
JSTAR Mission Vehicle, Common Ground Station (CGS) M1113 with LMS Shelter and JSTAR Mission Trailer, HMT with Generator Set (Modified M1102 HMT)	HMMWV-9,302 Trailer-4,114	25K 25K	15/5 25/30	CH-47

- **Materials.** The following materials are required to rig this load:
  - Sling set (10,000-pound capacity) (2 each).
    - Additional chain length, part number 38850-00053-101, from a 10,000-pound capacity sling set (8 each).
    - Additional coupling link, part number 577-0615, from a 10,000-pound sling set (8 each).

    OR
  - Sling set (25,000-pound capacity) (2 each).
    - Chain length, part number 38850-00053-102, from a 25,000-pound capacity sling set (8 each).
    - Coupling link, NSN 4010-01-041-9751, from a 25,000-pound sling set (8 each).
  - Tape, adhesive, pressure-sensitive, 2-inch wide roll.
  - Cord, nylon, Type III, 550-pound breaking strength.
  - Webbing, cotton, 1/4-inch, 80-pound breaking strength.
  - Strap, cargo, tiedown, CGU-1/B (2 each).
  - Felt sheet, cattle hair, Type IV, 1/2-inch or suitable substitute.
- **Personnel.** Two persons can prepare and rig the M1097 HMMWV in 15 minutes. Two persons can prepare and rig the generator set in 10 minutes.
- **Procedures.** Attach the generator set to the truck by placing the lunette on the pintle hook and securing the latch with tape or Type III nylon cord. Secure the safety chains, cables, and hoses. Position the vehicle on level ground so both the truck and generator set are in a straight line. The following procedures apply to this load:
  - **Preparation.** Prepare the load using the following steps:
    - Fold mirrors inward and tie together with Type III nylon cord. Remove the doors and secure to the seats with Type III nylon cord.
    - Remove the two transfer cases from the trailer and stow and secure inside the shelter. Secure all loose equipment inside the shelter with tape, Type III nylon cord, or tiedown straps.
    - Secure all equipment and cargo inside the truck with tiedown straps, tape, or Type III nylon cord.

- Ensure the fuel tanks are not over 3/4 full. Inspect the fuel tank cap, oil filler cap, and battery caps for proper installation.
- Engage the vehicle parking brake and put the transmission in neutral.
- Ensure the front wheels are pointed straight ahead. Tie down the steering wheel, using the securing device attached under the dashboard.
- Install the lift provisions on the outer ends of the rear bumper by removing the tiedown provisions located on the front bumper and installing on the outer ends of the front bumper and installing on the outer ends of the rear bumper.
- Retract the lunette leg and secure with Type III nylon cord.
- Secure all lids, doors, and caps with tape or Type III nylon cord.
- Ensure the parking brake is set.
- Route the hook portion of a CGU-1/B tiedown strap through the left rear inboard tie down provision located near the pintle on the rear bumper of the truck. Loop the tiedown through the left front trailer lift provision located on the left front of the trailer. Attach the hook portion of the tiedown strap to the ratchet.

Note. Do not attach the tiedown strap to the rear wheels of the vehicle. The rear wheels may rotate during flight causing slack in the straps.

- Repeat the above procedure on the right side of the load.
- Tighten both CGU-1/B tiedown straps at the same time. Secure the excess strap and safety the ratchet handles in the closed position with tape.
- Connect one additional chain length to each chain on each sling set with a coupling link.

- **Rigging.** Rig the load according to the steps in Figure 5-12.
- **Hookup.** Two hookup teams are required for this load. The static wand person discharges the static electricity with the static wand. The forward hookup person kneels on top of the shelter and places apex fitting 1 onto the forward cargo hook. The aft hookup person kneels on top of the generator and places apex fitting 2 onto the aft cargo hook. The hookup team then carefully dismounts the trailer and remains close to the load as the helicopter removes slack from the sling legs. When successful hookup is assured, the hookup team quickly exits the area underneath the helicopter to the designated rendezvous point.
- **Derigging.** Derigging is the reverse of the preparation and rigging procedures.

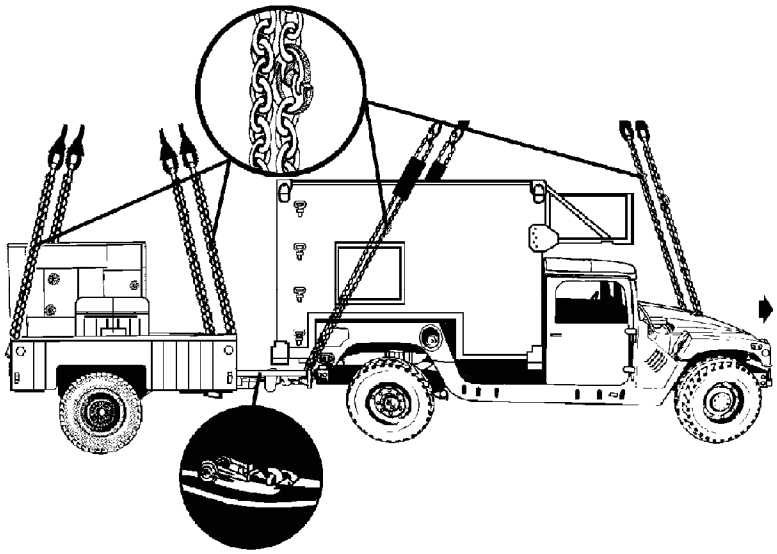

RIGGING STEPS

1. Position apex fitting on top of the shelter. Route outer sling legs 1 and 2 to the front of the vehicle and inner sling legs 3 and 4 to the rear. Sling legs 1 and 3 must be on the left side of the load.

2. Loop the chain end of sling leg 1 through the left front lift provision that protrudes through the hood from inboard to outboard. Place the correct link from Table 5-12 in the grab hook. Repeat with sling leg 2 and the right front lift provision. Secure excess chain with tape or Type III nylon cord.

3. Loop the chain end of the sling legs through their respective lift provisions located on the outer ends of the rear bumper. Place the correct link from Table 5-12 in the grab hook. Secure excess chain with tape or Type III nylon cord.

4. Pad the chain where it contacts the shelter sides.

5. Cluster and tie (breakaway technique) all sling legs together on top of the vehicle to prevent entanglement during hookup and lift-off.

6. Position the apex fitting of sling set 2 on top of the generator set. Route outer sling legs 1 and 2 to the front of the generator and inner sling legs 3 and 4 to the rear of the generator. Sling legs 1 and 3 must be on the left side of the load.

7. Loop the chain end of sling leg 1 through the left front lift provision located on the front of the trailer. Place the correct link from Table 5-12 in the grab hook. Repeat with sling leg 2 through the right front lift provision. Secure excess chain with tape or Type III nylon cord.

8. Loop the chain end of sling leg 3 through the left rear lift provision. Place the correct link from Table 5-12 in the grab hook. Repeat with sling leg 4 through the right rear lift provision. Secure excess chain with tape or Type III nylon cord.

9. Cluster and tie (breakaway technique) all sling legs together on top of the trailer to prevent entanglement during hookup and lift-off.

Figure 5-12. Joint Surveillance Target Attack Radar (JSTAR) System, M1097 (HMMWV) Mission Vehicle with LMS Shelter and Mission Trailer, HMT with Generator

M1097 SHELTER CARRIER, 1-1/4 TON (HMMWV) WITH AN/TPQ-36(V)7, (S-250 SHELTER), OPERATIONS CONTROL GROUP, OKG-398/TPW, AND M116A2 EQUIPMENT TRAILER GROUP

5-14. The M1097 shelter carrier, 1-1/4 ton with AN/TPQ-36(V)7, (S-250 shelter), operations control group, OKG-398/TPW, and M116A2 equipment trailer group are rigged for dual-point sling load using the following procedures:

- **Applicability.** The following items in Table 5-13 are certified for the helicopter(s) listed in the following table by the US Army Natick Soldier Center:

Table 5-13. M1097 Shelter Carrier, 1-1/4 Ton with AN/TPQ-36(V)7, (S-250 Shelter), Operations Control Group, OKG-398/TPW, and M116A2 Equipment Trailer Group

Nomenclature	*Max Weight (Pounds)*	*Sling Set*	*Link Count Front/Rear*	*Type of Aircraft*
Truck, Shelter Carrier, M1097 with OKG-398/TPW, Operations Control Group, (S-250 Shelter)	8,500	10K	80/5	CH-47
Equipment Trailer Group, M116A2	2,300	10K	90/70	CH-47

- **Materials.** The following materials are required to rig this load:
  - Sling set (10,000-pound capacity) (2 each).
    - Additional chain length, part number 38850-00053-101, from a 10,000-pound capacity sling set (8 each).
    - Additional coupling link, part number 577-0615, from a 10,000-pound sling set (8 each).
  - Tape, adhesive, pressure-sensitive, 2-inch wide roll.
  - Cord, nylon, Type III, 550-pound breaking strength.
  - Webbing, cotton, 1/4-inch, 80-pound breaking strength.
  - Strap, cargo, tiedown, CGU-1/B (2 each, or more as required to secure cargo).
  - Felt sheet, cattle hair, Type IV, 1/2-inch or suitable substitute.
- **Personnel.** Two persons can prepare and rig the M1097 HMMWV in 15 minutes. Two persons can prepare and rig the trailer in 15 minutes.
- **Procedures.** Attach the trailer to the truck by placing the lunette on the pintle hook and securing the latch. Secure the safety chains, cables, and hoses. Position the vehicle on level ground so both the truck and trailer are in a straight line. The following procedures apply to this load:
  - **Preparation.** Prepare the load using the following steps:
    - Fold the mirrors in and tie together with Type III nylon cord. Remove the doors and secure to the seats with Type III nylon cord.
    - Secure all loose equipment inside the shelter with tape, Type III nylon cord, or tiedown straps.
    - Secure all equipment and cargo inside the truck with tiedown straps, tape, or Type III nylon cord.
    - Ensure the fuel tank is not over 3/4 full. Inspect the fuel tank cap, oil filler cap, and battery caps for proper installation.
    - Engage the vehicle parking brake and put the transmission in neutral.
    - Ensure the front wheels are pointed straight ahead. Tie down the steering wheel, using the securing device attached under the dashboard.
    - Install the lift provisions on the outer ends of the rear bumper by removing the tiedown provisions located on the front bumper and installing on the outer ends of the rear bumper.
    - Raise the landing leg and secure in position with safety pins and tape.

- Ensure the trailer hand brake is set.
- Secure the equipment, canvas, and bows in the bed of the trailer with tiedown straps. Route the straps diagonally over the equipment from front to rear.
- Route the hook portion of a CGU-1/B tiedown strap through the left rear inboard tiedown provision located near the pintle on the rear bumper of the truck and through the mounting bracket on the front of the trailer A-frame. Connect the hook to the ratchet of the CGU-1/B.
- Repeat the above procedure on the right side of the load.
- Tighten both CGU-1/B tiedown straps at the same time. Secure the excess strap and safety the ratchet handles in the closed position with tape. Tape the CGU-1/B tiedown strap every 24 inches to prevent flapping.
- Connect one additional chain length to each chain on each sling set with a coupling link.

■ **Rigging.** Rig the load according to the steps in Figure 5-13.

■ **Hookup.** Two hookup persons are required for this load. The forward hookup person stands on cab of the truck and places apex fitting 1 onto the forward cargo hook. The aft hookup person stands on the fender of the trailer and places apex fitting 2 onto the aft cargo hook. The hookup team then carefully dismounts the trailer and remains close to the load as the helicopter removes slack from the sling legs. When successful hookup is assured, the hookup team quickly exits the area underneath the helicopter to the designated rendezvous point.

■ **Derigging.** Derigging is the reverse of the preparation and rigging procedures.

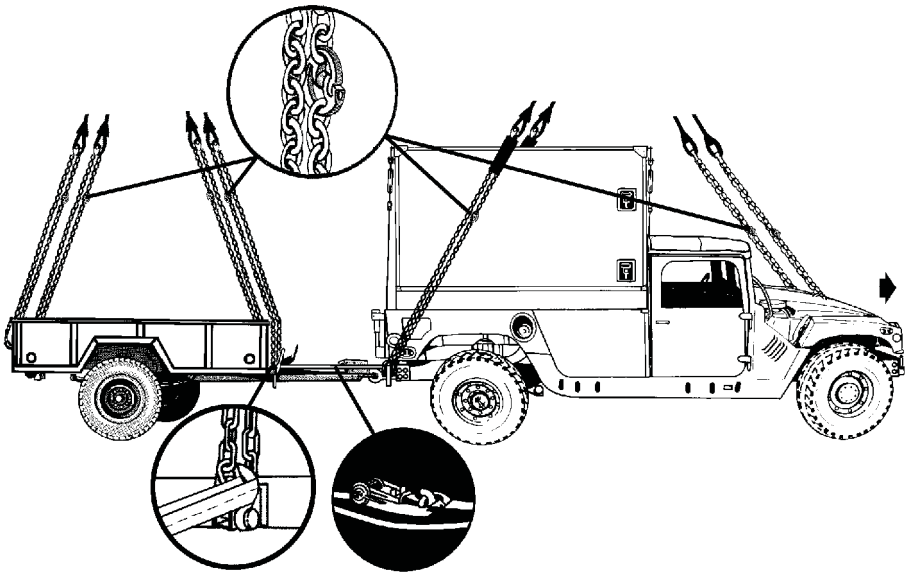

RIGGING STEPS

1. Position apex fitting on top of the truck. Route outer sling legs 1 and 2 to the front of the vehicle and inner sling legs 3 and 4 to the rear. Sling legs 1 and 3 must be on the left side of the load.

2. Loop the chain end of sling leg 1 through the left front lift provision that protrudes through the hood from inboard to outboard. Place the correct link from Table 5-13 in the grab hook. Repeat with sling leg 2 and the right front lift provision. Secure excess chain with tape or Type III nylon cord.

Figure 5-13. M1097 Shelter Carrier, 1-1/4 Ton (HMMWV) with AN/TPQ-36(V)7, (S-250 Shelter), Operations Control Group, OKG-398/TPW, and M116A2 Equipment Trailer Group

RIGGING STEPS (Continued)
3. Loop the chain end of the sling legs through their respective lift provisions located on the outer ends of the rear bumper. Place the correct link from Table 5-13 in the grab hook. 4. Pad the chain where it contacts the shelter sides. 5. Cluster and tie (breakaway technique) all sling legs together on top of the vehicle to prevent entanglement during hookup and lift-off. 6. Position the apex fitting of sling set 2 on top of the trailer. Route outer sling legs 1 and 2 to the front of the trailer and inner sling legs 3 and 4 to the rear of the trailer. Sling legs 1 and 3 must be on the left side of the load. 7. Loop the chain end of sling leg 1 through the left front lift provision located on the front of the trailer. Place the correct link from Table 5-13 in the grab hook. Repeat with sling leg 2 through the right front lift provision. Secure excess chain with tape or Type III nylon cord. 8. Loop the chain end of sling leg 3 through the left rear lift provision. Place the correct link from Table 5-13 in the grab hook. Repeat with sling leg 4 through the right rear lift provision. Secure excess chain with tape or Type III nylon cord. 9. Cluster and tie (breakaway technique) all sling legs together on top of the trailer to prevent entanglement during hookup and lift-off.

Figure 5-13. M1097 Shelter Carrier, 1-1/4 Ton (HMMWV) with AN/TPQ-36(V)7, (S-250 Shelter), Operations Control Group, OKG-398/TPW, and M116A2 Equipment Trailer Group (Continued)

M1097A2 (HMMWV) WITH ADVANCED FIELD ARTILLERY TACTICAL DATA SYSTEM (AFATDS) FULL SIZE SOFT TOP INSTALLATION KIT (STIK) AND M101A1 TRAILER

5-15. The M1097A2 with advanced field artillery tactical data system full size soft top installation kit and M101A1 trailer are rigged for dual-point sling load using the following procedures:

- **Applicability.** The following items in Table 5-14 are certified for the helicopter(s) listed in the following table by the US Army Natick Soldier Center:

Table 5-14. M1097A2 with Advanced Field Artillery Tactical Data System Full Size Soft Top Installation Kit and M101A1 Trailer

Nomenclature	*Max Weight (Pounds)*	*Sling Set*	*Link Count Front/Rear*	*Type of Aircraft*
System 2: CHS-2 AN/GYG-3 (V)1, with SINGARS AN/VRC-90, AN/VRC-92 and EPLRS installed in bed. AN/VRC-92 installed in cab.	8,103	25K	50/3	CH-47
System 3: CHS-2 AN/GYG-3 (V)3, with SINGARS AN/VRC-90, AN/VRC-92 and EPLRS installed in bed. AN/VRC-92 installed in cab.	8,366	25K	50/3	CH-47
System 4: 2 each AN/GYK-37 (V)2, with SINGARS AN/VRC-89, AN/VRC-92 and EPLRS	7,790	25K	50/3	CH-47
Trailer, M101A1	3,200	25K	15/20	CH-47

- **Materials.** The following materials are required to rig this load:
  - Sling set (25,000-pound capacity) (2 each).
    - Additional chain length, part number 38850-00053-102, from a 25,000-pound capacity sling set (8 each).
    - Additional coupling link, NSN 4010-01-041-9751, from a 25,000-pound sling set (8 each).
  - Tape, adhesive, pressure-sensitive, 2-inch wide roll.
  - Cord, nylon, Type III, 550-pound breaking strength.
  - Webbing, cotton, 1/4-inch, 80-pound breaking strength.
  - Strap, cargo, tiedown, CGU-1/B (2 each).
  - Sling guides (included as part of the HMMWV STIK) (2 each).
  - Reach pendant (25,000-pound capacity) (2 each).
- **Personnel.** Two persons can prepare and rig the M1097A2 HMMWV in 15 minutes. Two persons can prepare and rig the generator set in 10 minutes.
- **Procedures.** Attach the trailer to the truck by placing the lunette on the pintle hook and securing the latch with tape or Type III nylon cord. Secure the safety chains, cables, and hoses. Position the vehicle on level ground so both the truck and trailer are in a straight line. The following procedures apply to this load:
  - **Preparation.** Prepare the load using the following steps:
    - Fold mirrors inward and tie together with Type III nylon cord. Remove the doors and secure to the seats with Type III nylon cord.
    - Secure all equipment and cargo inside the truck and trailer with tiedown straps, tape, or Type III nylon cord.
    - Ensure the fuel tank is not over 3/4 full. Inspect the fuel tank cap, oil filler cap, and battery caps for proper installation.
    - Engage the vehicle parking brake and put the transmission in neutral.
    - Ensure the front wheels are pointed straight ahead. Tie down the steering wheel, using the securing device attached under the dashboard.
    - Retract the lunette leg and secure with Type III nylon cord.
    - Ensure the trailer parking brakes are set.
    - Route the hook portion of a CGU-1/B tiedown strap through the left rear inboard tiedown provision located near the pintle on the rear bumper of the truck and through the mounting bracket on the front of the trailer A-frame. Connect the hook to the ratchet of the CGU-1/B.
    - Repeat the above procedure on the right side of the load.
    - Tighten both CGU-1/B tie-down straps at the same time. Secure the excess strap and safety the ratchet handles in the closed position with tape.
    - Install a reach pendant on each apex fitting.
    - Connect one additional chain length to each chain on each sling set with a coupling link.
    - Ensure the STIK sling guides are properly installed.

CAUTION

Do not connect the CGU-1/B tiedown strap around the truck's rear axle or wheel.

- **Rigging.** Rig the load according to the steps in Figure 5-14.
- **Hookup.** Two hookup teams are required for this load. The static wand person discharges the static electricity with the static wand. The forward hookup person kneels on top of the truck and places apex fitting 1 onto the forward cargo hook. The aft hookup person stands in the trailer and places apex fitting 2 onto the aft cargo hook. The hookup team then carefully dismounts the load and remains close to the load as the helicopter removes slack from the sling legs. When successful hookup is assured, the hookup team quickly exits the area underneath the helicopter to the designated rendezvous point.
- **Derigging.** Derigging is the reverse of the preparation and rigging procedures.

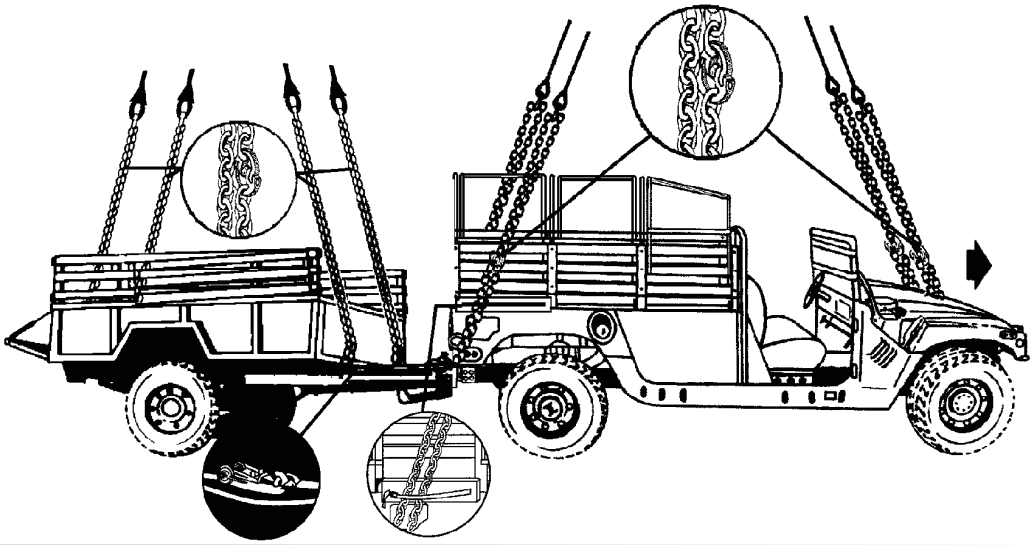

RIGGING STEPS

1. Position apex fitting on top of the truck. Route outer sling legs 1 and 2 to the front of the vehicle and inner sling legs 3 and 4 to the rear. Sling legs 1 and 3 must be on the left side of the load.

2. Loop the chain end of sling leg 1 through the left front lift provision that protrudes through the hood from inboard to outboard. Place the correct link from Table 5-14 in the grab hook. Repeat with sling leg 2 and the right front lift provision. Secure excess chain with tape or Type III nylon cord.

3. Loop the chain end of sling leg 3 through the left guide, through the left rear lift provision located on the outer ends of the rear bumper, and back through the left sling guide. Place the correct link from Table 5-14 in the grab hook. Repeat with sling leg 4 and the right sling guide and right rear lift provision. Secure excess chain with tape or Type III nylon cord.

4. Cluster and tie (breakaway technique) all sling legs together on top of the vehicle to prevent entanglement during hookup and lift-off.

5. Position the apex fitting of sling set 2 in the bed of the trailer. Route outer sling legs 1 and 2 to the front of the trailer and inner sling legs 3 and 4 to the rear of the trailer. Route the rear chains through the opening between the tailgate and the trailer bed and inside the trailer hinges. Sling legs 1 and 3 must be on the left side of the load.

6. Loop the chain end of sling leg 1 through the left front lift provision located on the front of the trailer. Place the correct link from Table 5-14 in the grab hook. Repeat with sling leg 2 through the right front lift provision. Secure excess chain with tape or Type III nylon cord.

Figure 5-14. M1097A2 with Advanced Field Artillery Tactical Data System Full Size Soft Top Installation Kit and M101A1 Trailer

RIGGING STEPS (Continued)
7. Loop the chain end of sling leg 3 through the left rear lift provision. Place the correct link from Table 5-14 in the grab hook. Repeat with sling leg 4 through the right rear lift provision. Secure excess chain with tape or Type III nylon cord. 8. Cluster and tie (breakaway technique) all sling legs together on top of the trailer to prevent entanglement during hookup and lift-off.

Figure 5-14. M1097A2 with Advanced Field Artillery Tactical Data System Full Size Soft Top Installation Kit and M101A1 Trailer (Continued)

M1097 (HMMWV) AND HIGH MOBILITY TRAILER (HMT)

5-16. The M1097 and high mobility trailer are rigged for dual-point sling load using the following procedures:

- **Applicability.** The following items in Table 5-15 are certified for the helicopter(s) listed in the following table by the US Army Natick Soldier Center:

Table 5-15. M1097 and High Mobility Trailer

Nomenclature	*Max Weight (Pounds)*	*Sling Set*	*Link Count Front/Rear*	*Type of Aircraft*
Shadow Tactical Unmanned Aerial Vehicle (TUAV) Troop Carrier with	7,085	25K	40/10	CH-47
Shadow Tactical Unmanned Aerial Vehicle (TUAV) Equipment Trailer	3,950	25K	40/50	CH-47
M1097 Truck, Utility, 1 ¼-Ton, ISYSCOM Radio Vehicle with	8,093	10K	27/3	CH-47
M1102 HMT	Min-2,477 Max-3,033	10K	6/25	CH-47

- **Materials.** The following materials are required to rig this load:
  - Sling set (10,000-pound capacity) (2 each).

    OR
  - Sling set (25,000-pound capacity) (2 each).
  - Tape, adhesive, pressure-sensitive, 2-inch wide roll.
  - Cord, nylon, Type III, 550-pound breaking strength.
  - Webbing, cotton, 1/4-inch, 80-pound breaking strength.
  - Strap, cargo, tiedown, CGU-1/B (2 each).
- **Personnel.** Two persons can prepare and rig the M1097 HMMWV in 15 minutes. Two persons can prepare and rig the trailer set in 15 minutes.
- **Procedures.** Attach the trailer to the truck by placing the lunette on the pintle hook and securing the latch with tape or Type III nylon cord. Secure the safety chains, cables, and hoses. Position the vehicle on level ground so both the truck and trailer are in a straight line. The following procedures apply to this load:
  - **Preparation.** Prepare the load using the following steps:
    - Fold mirrors inward and tie together with Type III nylon cord.
    - Secure all equipment and cargo inside the truck and trailer with tiedown straps, tape, or Type III nylon cord.

- Ensure the fuel tank is not over 3/4 full. Inspect the fuel tank cap, oil filler cap, and battery caps for proper installation.
- Engage the vehicle parking brake and put the transmission in neutral.
- Ensure the front wheels are pointed straight ahead. Tie down the steering wheel, using the securing device attached under the dashboard.
- Retract the lunette leg and secure with Type III nylon cord.
- Ensure the trailer parking brakes are set.
- Route the hook portion of a CGU-1/B tiedown strap through the left rear inboard tiedown provision located near the pintle on the rear bumper of the truck and through the mounting bracket on the front of the trailer A-frame. Connect the hook to the ratchet of the CGU-1/B.
- Repeat the above procedure on the right side of the load.
- Tighten both CGU-1/B tiedown straps at the same time. Secure the excess strap and safety the ratchet handles in the closed position with tape.

CAUTION

Do not connect the CGU-1/B tiedown strap around the truck's rear axle or wheel.

- **Rigging.** Rig the load according to the steps in Figure 5-15.
- **Hookup.** Two hookup teams are required for this load. The static wand person discharges the static electricity with the static wand. The forward hookup person kneels on the hood of the truck and places apex fitting 1 onto the forward cargo hook. The aft hookup person stands in the trailer and places apex fitting 2 onto the aft cargo hook. The hookup team then carefully dismounts the load and remains close to the load as the helicopter removes slack from the sling legs. When successful hookup is assured, the hookup team quickly exits the area underneath the helicopter to the designated rendezvous point.
- **Derigging.** Derigging is the reverse of the preparation and rigging procedures.

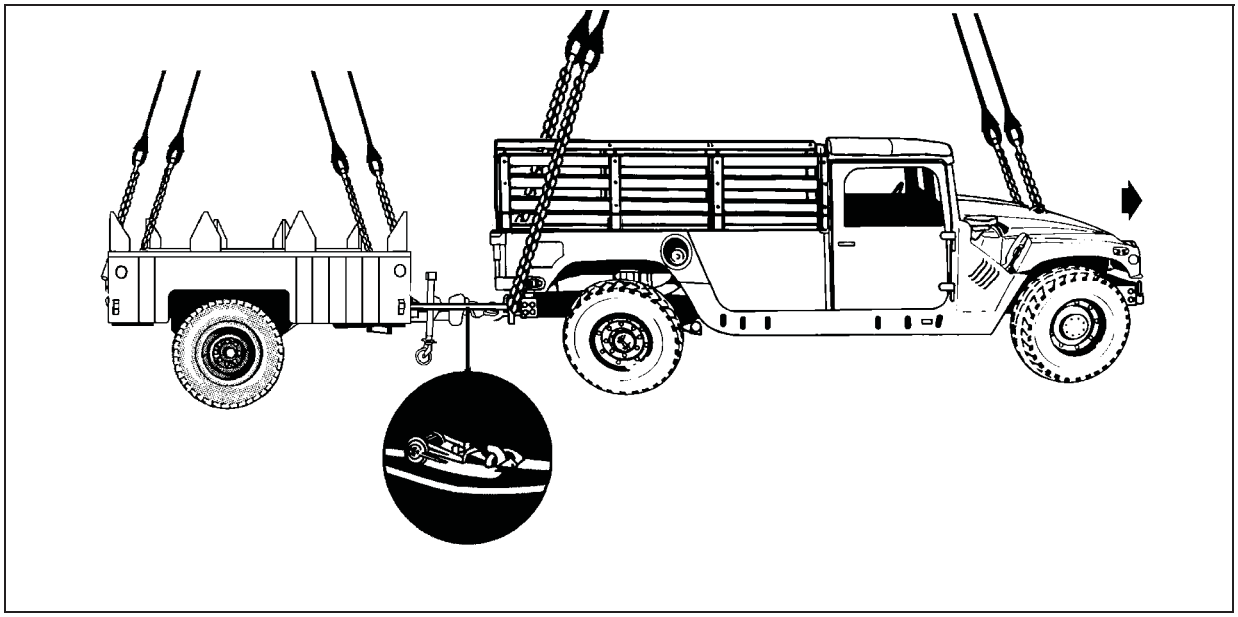

Figure 5-15. M1097 and High Mobility Trailer

RIGGING STEPS
1. Position apex fitting in bed of the truck. Route outer sling legs 1 and 2 to the front of the vehicle and inner sling legs 3 and 4 to the rear. Sling legs 1 and 3 must be on the left side of the load.
2. Loop the chain end of sling leg 1 through the left front lift provision that protrudes through the hood from inboard to outboard. Place the correct link from Table 5-15 in the grab hook. Repeat with sling leg 2 and the right front lift provision. Secure excess chain with tape or Type III nylon cord.
3. Route the chain end of sling leg 3 through the eyelet opening in the upper left corner of the tailgate. Loop the chain end through the left lift provision on the bumper and thread back through the eyelet opening in the tailgate. Place the correct link from Table 5-15 in the grab hook. Repeat with sling leg 4 through the right rear lift provision. See insert above.
4. Cluster and tie (breakaway technique) all sling legs together on top of the vehicle to prevent entanglement during hookup and lift-off.
5. Position the apex fitting of sling set 2 in the bed of the trailer. Route outer sling legs 1 and 2 to the front of the trailer and inner sling legs 3 and 4 to the rear of the trailer. Sling legs 1 and 3 must be on the left side of the load.
6. Loop the chain end of sling leg 1 through the left front lift provision located on the front of the trailer. Place the correct link from Table 5-15 in the grab hook. Repeat with sling leg 2 through the right front lift provision. Secure excess chain with tape or Type III nylon cord.
7. Loop the chain end of sling leg 3 through the left rear lift provision. Place the correct link from Table 5-15 in the grab hook. Repeat with sling leg 4 through the right rear lift provision. Secure excess chain with tape or Type III nylon cord.
8. Cluster and tie (breakaway technique) all sling legs together on top of the trailer to prevent entanglement during hookup and lift-off.

Figure 5-15. M1097 and High Mobility Trailer (Continued)

M1113 (HMMWV) WITH LMS SHELTER AND HIGH MOBILITY TRAILER (HMT)

5-17. The M1113 with LMS shelter and high mobility trailer are rigged for dual-point sling load using the following procedures:

- **Applicability.** The following items in Table 5-16 are certified for the helicopter(s) listed in the following table by the US Army Natick Soldier Center:

Table 5-16. M1113 with LMS Shelter and High Mobility Trailer

Nomenclature	*Max Weight (Pounds)*	*Sling Set*	*Link Count Front/Rear*	*Type of Aircraft*
Shadow Tactical Unmanned Aerial Vehicle (TUAV) Maintenance Section Multifunctional (MSM)	9,774	25K	25/10	CH-47
Shadow Tactical Unmanned Aerial Vehicle (TUAV) Equipment Maintenance Section Multifunctional (MSM) Trailer	3,737	25K	20/30	CH-47

- **Materials.** The following materials are required to rig this load:
  - Sling set (25,000-pound capacity) (2 each).
    - Additional chain length, part number 38850-00053-102, from a 25,000-pound capacity sling set (8 each).
    - Additional coupling link, NSN 4010-01-041-9751, from a 25,000-pound sling set (8 each).

- Tape, adhesive, pressure-sensitive, 2-inch wide roll.
- Cord, nylon, Type III, 550-pound breaking strength.
- Webbing, cotton, 1/4-inch, 80-pound breaking strength.
- Strap, cargo, tiedown, CGU-1/B (2 each).
- Felt sheet, cattle hair, Type IV, 1/2-inch or suitable substitute.

- **Personnel.** Two persons can prepare and rig the M1113 HMMWV in 15 minutes. Two persons can prepare and rig the trailer set in 15 minutes.
- **Procedures.** Attach the trailer to the truck by placing the lunette on the pintle hook and securing the latch with tape or Type III nylon cord. Secure the safety chains, cables, and hoses. Position the vehicle on level ground so both the truck and trailer are in a straight line. The following procedures apply to this load:
  - **Preparation.** Prepare the load using the following steps:
    - Fold mirrors inward and tie together with Type III nylon cord.
    - Secure all equipment and cargo inside the truck and trailer with tiedown straps, tape, or Type III nylon cord.
    - Secure all loose equipment inside the shelter with tape, Type III nylon cord, or tie-down straps. Close and secure the door.
    - Ensure the fuel tank is not over 3/4 full. Inspect the fuel tank cap, oil filler cap, and battery caps for proper installation.
    - Engage the vehicle parking brake and put the transmission in neutral.
    - Ensure the front wheels are pointed straight ahead. Tie down the steering wheel, using the securing device attached under the dashboard.
    - Secure the generator release handle with Type III nylon cord.
    - Retract the lunette leg and secure with Type III nylon cord.
    - Ensure all equipment in the trailer is secured with the supplied cargo net and CGU-1/B cargo tiedown straps or Type III nylon cord.
    - Ensure the trailer parking brakes are set.
    - Route the hook portion of a CGU-1/B tiedown strap through the left rear inboard tiedown provision located near the pintle on the rear bumper of the truck and through the mounting bracket on the front of the trailer A-frame. Connect the hook to the ratchet of the CGU-1/B.
    - Repeat the above procedure on the right side of the load.
    - Tighten both CGU-1/B tiedown straps at the same time. Secure the excess strap and safety the ratchet handles in the closed position with tape.
    - Connect one additional chain length to each chain on each sling set with a coupling link.

CAUTION

Do not connect the CGU-1/B tiedown strap around the truck's rear axle or wheel.

  - **Rigging.** Rig the load according to the steps in Figure 5-16.
  - **Hookup.** Two hookup teams are required for this load. The static wand person discharges the static electricity with the static wand. The forward hookup person kneels on the top of the shelter and places apex fitting 1 onto the forward cargo hook. The aft hookup person stands in the trailer and places apex fitting 2 onto the aft cargo hook. The hookup team then carefully

dismounts the load and remains close to the load as the helicopter removes slack from the sling legs. When successful hookup is assured, the hookup team quickly exits the area underneath the helicopter to the designated rendezvous point.

- **Derigging.** Derigging is the reverse of the preparation and rigging procedures.

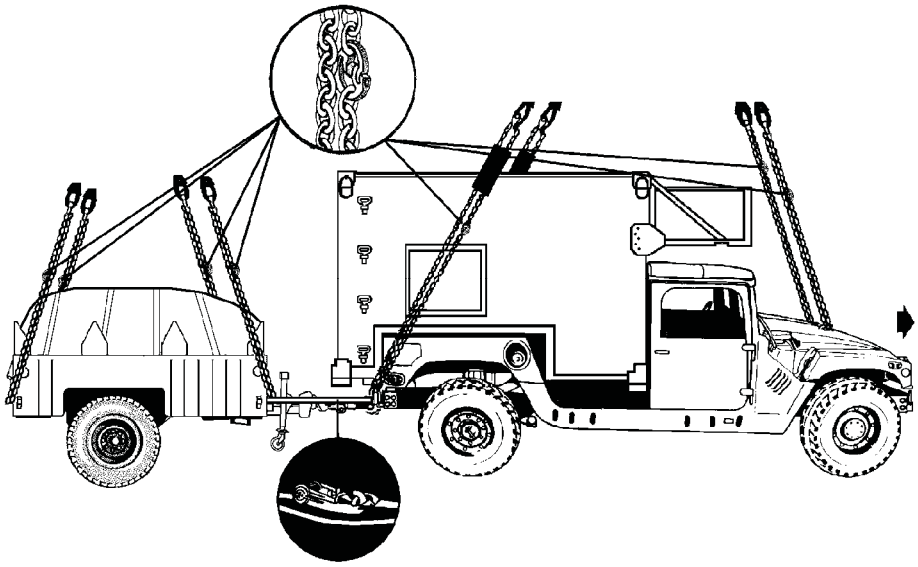

RIGGING STEPS

1. Position apex fitting on the roof of the truck. Route outer sling legs 1 and 2 to the front of the vehicle and inner sling legs 3 and 4 to the rear. Sling legs 1 and 3 must be on the left side of the load.

2. Loop the chain end of sling leg 1 through the left front lift provision that protrudes through the hood from inboard to outboard. Place the correct link from Table 5-16 in the grab hook. Repeat with sling leg 2 and the right front lift provision. Secure excess chain with tape or Type III nylon cord.

3. Loop the chain end of the sling legs through their respective lift provisions located on the outer ends of the rear bumper. Place the correct link from Table 5-16 in the grab hook. Secure excess chain with tape or Type III nylon cord.

4. Cluster and tie (breakaway technique) all sling legs together on top of the vehicle to prevent entanglement during hookup and lift-off.

5. Position the apex fitting of sling set 2 in the bed of the trailer. Route outer sling legs 1 and 2 to the front of the trailer and inner sling legs 3 and 4 to the rear of the trailer. Sling legs 1 and 3 must be on the left side of the load.

6. Loop the chain end of sling leg 1 through the left front lift provision located on the front of the trailer. Place the correct link from Table 5-16 in the grab hook. Repeat with sling leg 2 through the right front lift provision. Secure excess chain with tape or Type III nylon cord.

7. Loop the chain end of sling leg 3 through the left rear lift provision. Place the correct link from Table 5-16 in the grab hook. Repeat with sling leg 4 through the right rear lift provision. Secure excess chain with tape or Type III nylon cord.

8. Cluster and tie (breakaway technique) all sling legs together on top of the trailer to prevent entanglement during hookup and lift-off.

Figure 5-16. M1113 with LMS Shelter and High Mobility Trailer

TROJAN SPIRIT LITE (V)2 CENTRAL COMMUNICATIONS, AN/TSQ-226 (V)2 ON M1113 (HMMWV) AND M1102 CARGO TRAILER

5-18. The Trojan Spirit Lite (V)2 central communications, AN/TSQ-226 (V)2 on M1113 and M1102 cargo trailer are rigged for dual-point sling load using the following procedures:

- **Applicability.** The following items in Table 5-17 are certified for the helicopter(s) listed in the following table by the US Army Natick Soldier Center:

Table 5-17. Trojan Spirit Lite (V)2 Central Communications, AN/TSQ-226 (V)2 on M1113 HMMWV and M1102 Cargo Trailer

Nomenclature	*Max Weight (Pounds)*	*Sling Set*	*Link Count Front/Rear*	*Type of Aircraft*
Trojan Spirit Lite (V)2 Central Communications, AN/TSQ-226 on M1113 HMMWV	10,180	25K	35/3	CH-47
M1102 Trailer, Cargo, Trojan Sprit Lite (V)2	3,260	10K	40/30	CH-47

- **Materials.** The following materials are required to rig this load:
  - Sling set (25,000-pound capacity).
    - Additional chain length, part number 38850-00053-102, from a 25,000-pound capacity sling set (4 each).
    - Additional coupling link, part number 664241, from a 25,000-pound sling set (4 each).
  - Sling set (10,000-pound capacity) with one additional apex fitting.
    - Chain length, part number 38850-00053-101, from a 10,000-pound capacity sling set (4 each).
    - Coupling link, part number 577-0615, from a 10,000-pound sling set (4 each).
  - Tape, adhesive, pressure-sensitive, 2-inch wide roll.
  - Cord, nylon, Type III, 550-pound breaking strength.
  - Webbing, cotton, 1/4-inch, 80-pound breaking strength.
  - Strap, cargo, tiedown, CGU-1/B (2 each).
- **Personnel.** Two persons can prepare and rig the HMMWV in 15 minutes. Two persons can prepare and rig the trailer in 15 minutes.
- **Procedures.** Attach the trailer to the truck by placing the lunette on the pintle hook and securing the latch with tape or Type III nylon cord. Secure the safety chains, cables, and hoses. Position the vehicle on level ground so both the truck and trailer are in a straight line. The following procedures apply to this load:
  - **Preparation.** Prepare the load using the following steps:
    - Fold mirrors inward and tie together with Type III nylon cord.
    - Secure all equipment and cargo inside the truck and trailer with tiedown straps, tape, or Type III nylon cord. Secure the doors shut if installed.
    - Secure all loose equipment on the pallet with tape, Type III nylon cord, or tiedown straps. Close and secure latches and handles with tape or Type III nylon cord.
    - Ensure the fuel tank is not over 3/4 full. Inspect the fuel tank cap, oil filler cap, and battery caps for proper installation.
    - Engage the vehicle parking brake and put the transmission in neutral.
    - Ensure the front wheels are pointed straight ahead. Tie down the steering wheel, using the securing device attached under the dashboard.
    - Tape the windshield in an X formation from corner to corner.
    - Secure the rear lift provisions in the up position with Type III nylon cord.
    - Retract the lunette leg and secure with Type III nylon cord.

- Secure all equipment in the trailer with the supplied cargo net, cargo tiedown straps, Type III nylon cord, and tape
- Ensure the trailer parking brakes are set.
- Route the hook portion of a CGU-1/B tiedown strap through the left rear inboard tiedown provision located near the pintle on the rear bumper of the truck and through the mounting bracket on the front of the trailer A-frame. Connect the hook to the ratchet of the CGU-1/B.
- Repeat the above procedure on the right side of the load.
- Tighten both CGU-1/B tie-down straps at the same time. Secure the excess strap and safety the ratchet handles in the closed position with tape.
- Connect one additional chain length to each chain on the 25,000-pound capacity sling set with a coupling link.
- Connect one additional chain length to each chain on the 10,000-pound capacity sling set with a coupling link.

CAUTION

Do not connect the CGU-1/B tiedown strap around the truck's rear axle or wheel.

- **Rigging.** Rig the load according to the steps in Figure 5-17.
- **Hookup.** Two hookup teams are required for this load. The static wand person discharges the static electricity with the static wand. The forward hookup person kneels on the top of the vehicle and places apex fitting 1 onto the forward cargo hook. The aft hookup person stands on the trailer and places apex fitting 2 onto the aft cargo hook. The hookup team then carefully dismounts the load and remains close to the load as the helicopter removes slack from the sling legs. When successful hookup is assured, the hookup team quickly exits the area underneath the helicopter to the designated rendezvous point.
- **Derigging.** Derigging is the reverse of the preparation and rigging procedures.

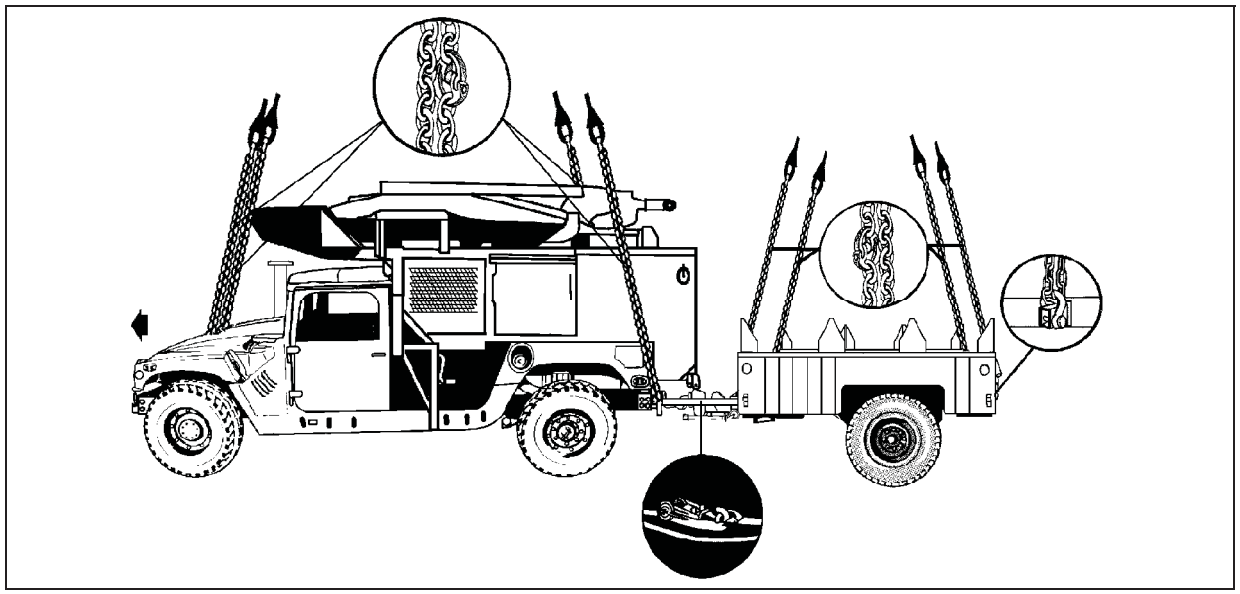

Figure 5-17. Trojan Spirit Lite (V)2 Central Communications, AN/TSQ-226 (V)2 on M1113 HMMWV and M1102 Cargo Trailer

RIGGING STEPS

1. Position the apex fitting of the 25,000-pound capacity sling set on the roof of the shelter. Route outer sling legs 1 and 2 to the front of the vehicle and inner sling legs 3 and 4 to the rear. Sling legs 1 and 3 must be on the left side of the load.

2. Loop the chain end of sling leg 1 through the left front lift provision that protrudes through the hood from inboard to outboard. Place the correct link from Table 5-17 in the grab hook. Repeat with sling leg 2 and the right front lift provision. Secure excess chain with tape or Type III nylon cord.

3. Loop the chain end of sling leg 3 through the left rear lift provision located on the outer end of the rear bumper. Place the correct link from Table 5-17 in the grab hook. Repeat with sling leg 4 and the right rear lift provision located on the outer end of the rear bumper ensuring the sling leg is routed between the handholds on the right side of the system. Remove the slack and secure sling leg 4 to the front handhold with a breakaway tie.

4. Position the apex fitting of the 10,000-pound sling set on top of the trailer. Route outer sling legs 1and 2 to the front of the trailer and inner sling legs 3 and 4 to the rear of the trailer. Sling legs 1 and 3 must be on the left side of the load.

5. Loop the chain end of sling leg 1 through the left front lift provision located on the front of the trailer. Place the correct link from Table 5-17 in the grab hook. Repeat with sling leg 2 through the right front lift provision. Secure excess chain with tape or Type III nylon cord.

6. Loop the chain end of sling leg 3 through the left rear lift provision. Place the correct link from Table 5-17 in the grab hook. Repeat with sling leg 4 through the right rear lift provision. Secure excess chain with tape or Type III nylon cord.

7. Cluster and tie (breakaway technique) all sling legs together on top of the vehicle and the trailer to prevent entanglement during hookup and lift-off.

Figure 5-17. Trojan Spirit Lite (V)2 Central Communications, AN/TSQ-226 (V)2 on M1113 HMMWV and M1102 Cargo Trailer (Continued)

JSTAR COMMON GROUND STATION (CGS) SUPPORT VEHICLE, M1097 HMMWV AND M1102 HIGH MOBILITY TRAILER

5-19. The JSTAR common ground station support vehicle, M1097 HMMWV and M1102 high mobility trailer are rigged for dual-point sling load using the following procedures:

- **Applicability.** The following items in Table 5-18 are certified for the helicopter(s) listed in the following table by the US Army Natick Soldier Center:

Table 5-18. JSTAR Common Ground Station Support Vehicle, M1097 HMMWV and M1102 High Mobility Trailer

Nomenclature	*Max Weight (Pounds)*	*Sling Set*	*Link Count Front/Rear*	*Type of Aircraft*
CGS JSTAR Support Vehicle, M1097 HMMWV	5,600	25K	45/5	CH-47
M1102 Trailer (Modified), CGS JSTAR Support Trailer	3,652	25K	50/50	CH-47

- **Materials.** The following materials are required to rig this load:
  - Sling set (25,000-pound capacity) (2 each).

- Additional chain length, part number 38850-00053-102, from a 25,000-pound capacity sling set (8 each).
- Additional coupling link, part number 664241, from a 25,000-pound sling set (8 each).

- Tape, adhesive, pressure-sensitive, 2-inch wide roll.
- Cord, nylon, Type III, 550-pound breaking strength.
- Webbing, cotton, 1/4-inch, 80-pound breaking strength.
- Strap, cargo, tiedown, CGU-1/B (2 each).

- **Personnel.** Two persons can prepare and rig the HMMWV in 15 minutes. Two persons can prepare and rig the trailer in 15 minutes.
- **Procedures.** Attach the trailer to the truck by placing the lunette on the pintle hook and securing the latch with tape or Type III nylon cord. Secure the safety chains, cables, and hoses. Position the vehicle on level ground so both the truck and trailer are in a straight line. The following procedures apply to this load:
  - **Preparation.** Prepare the load using the following steps:
    - Fold mirrors inward and tie together with Type III nylon cord.
    - Secure all equipment and cargo inside the truck and trailer with tiedown straps, tape, or Type III nylon cord. Secure the doors shut if installed.
    - Ensure the fuel tank is not over 3/4 full. Inspect the fuel tank cap, oil filler cap, and battery caps for proper installation.
    - Engage the vehicle parking brake and put the transmission in neutral.
    - Ensure the front wheels are pointed straight ahead. Tie down the steering wheel, using the securing device attached under the dashboard.
    - Tape the windshield in an X formation from corner to corner.
    - Secure the rear lift provisions in the up position with Type III nylon cord.
    - Retract the lunette leg and secure with Type III nylon cord.
    - Ensure the trailer parking brakes are set.
    - Route the hook portion of a CGU-1/B tiedown strap through the left rear inboard tiedown provision located near the pintle on the rear bumper of the truck and through the mounting bracket on the front of the trailer A-frame. Connect the hook to the ratchet of the CGU-1/B.
    - Repeat the above procedure on the right side of the load.
    - Tighten both CGU-1/B tie-down straps at the same time. Secure the excess strap and safety the ratchet handles in the closed position with tape.
    - Connect one additional chain length to each chain on the 25,000-pound capacity sling set with a coupling link.

CAUTION

Do not connect the CGU-1/B tiedown strap around the truck's rear axle or wheel.

  - **Rigging.** Rig the load according to the steps in Figure 5-18.
  - **Hookup.** Two hookup teams are required for this load. The static wand person discharges the static electricity with the static wand. The forward hookup person kneels on the top of the vehicle and places apex fitting 1 onto the forward cargo hook. The aft hookup person stands on the trailer and places apex fitting 2 onto the aft cargo hook. The hookup team then carefully dismounts the load and remains close to the load as the helicopter removes slack from the sling legs. When successful hookup is assured, the hookup team quickly exits the area underneath the helicopter to the designated rendezvous point.
  - **Derigging.** Derigging is the reverse of the preparation and rigging procedures.

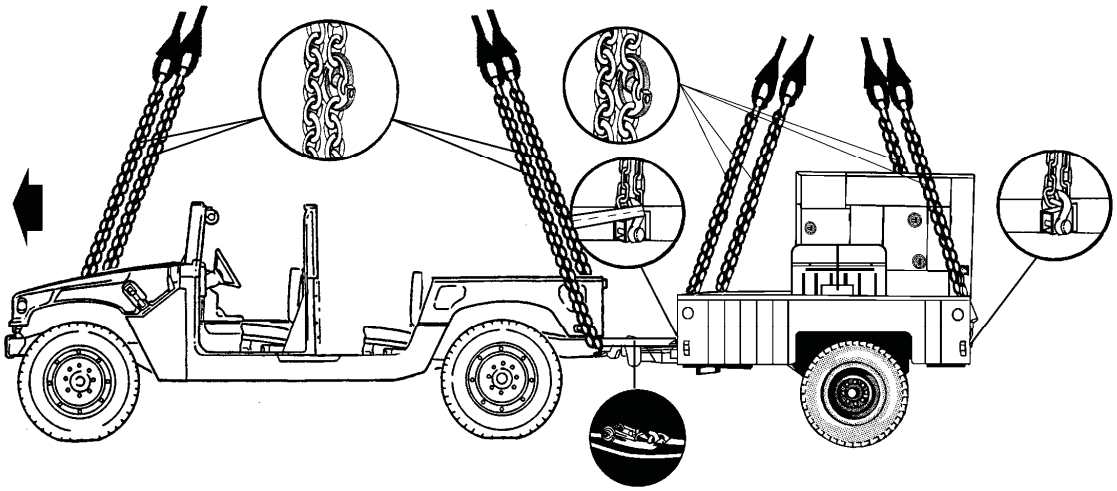

RIGGING STEPS

1. Position apex fitting on top of the truck. Route outer sling legs 1 and 2 to the front of the vehicle and inner sling legs 3 and 4 to the rear. Sling legs 1 and 3 must be on the left side of the load.

2. Loop the chain end of sling leg 1 through the left front lift provision that protrudes through the hood from inboard to outboard. Place the correct link from Table 5-18 in the grab hook. Repeat with sling leg 2 and the right front lift provision. Secure excess chain with tape or Type III nylon cord.

3. Loop the chain end of sling leg 3 through the left rear lift provision located on the outer ends of the rear bumper. Place the correct link from Table 5-18 in the grab hook. Repeat with sling leg 4 and the right rear lift provision. Secure excess chain with tape or Type III nylon cord.

4. Cluster and tie (breakaway technique) all sling legs together on top of the vehicle to prevent entanglement during hookup and lift-off.

5. Position the apex fitting of sling set 2 in the bed of the trailer. Route outer sling legs 1 and 2 to the front of the trailer and inner sling legs 3 and 4 to the rear of the trailer. Sling legs 1 and 3 must be on the left side of the load.

6. Loop the chain end of sling leg 1 through the left front lift provision located on the front of the trailer. Place the correct link from Table 5-18 in the grab hook. Repeat with sling leg 2 through the right front lift provision. Secure excess chain with tape or Type III nylon cord.

7. Loop the chain end of sling leg 3 through the left rear lift provision. Place the correct link from Table 5-18 in the grab hook. Repeat with sling leg 4 through the right rear lift provision. Secure excess chain with tape or Type III nylon cord.

8. Cluster and tie (breakaway technique) all sling legs together on top of the trailer to prevent entanglement during hookup and lift-off.

Figure 5-18. JSTAR Common Ground Station Support Vehicle, M1097 HMMWV and M1102 High Mobility Trailer

M1097 TRUCK, UTILITY, 1 1/4-TON (HMMWV) WITH AN/MPQ-64 TACTICAL QUIET GENERATOR (TQG) AND HIGH MOBILITY TRAILER (HMT) WITH SENTINEL ANTENNA TRANSCEIVER GROUP (ATG)

5-20. The M1097 Truck, Utility, 1 1/4-Ton with AN/MPQ-64 Tactical Quiet Generator and High Mobility Trailer with Sentinel Antenna Transceiver Group are rigged for dual-point sling load using the following procedures:.

- **Applicability.** The following items in Table 5-19 are certified for the helicopter(s) listed in the following table by the US Army Natick Soldier Center:

Table 5-19. M1097 Truck, Utility, 1 1/4-Ton with AN/MPQ-64 Tactical Quiet Generator and High Mobility Trailer with Sentinel Antenna Transceiver Group

Nomenclature	*Max Weight (Pounds)*	*Sling Set*	*Link Count Front/Rear*	*Type of Aircraft*
M1097 HMMWV with AN/MPQ-64 TQG	7,800	10K	27/3	CH-47
HMT with Sentinel ATG with Spreader Bar Modification	3,900	10K	6/30	CH-47

- **Materials.** The following materials are required to rig this load:
  - Sling set (10,000-pound capacity) (2 each).
  - Tape, adhesive, pressure-sensitive, 2-inch wide roll.
  - Cord, nylon, Type III, 550-pound breaking strength.
  - Webbing, cotton, 1/4-inch, 80-pound breaking strength.
  - Strap, cargo, tiedown, CGU-1/B (2 each).
  - Plywood, 3/4-inch x 4-foot x 6-foot.
  - Reach pendants (2 each).
  - Spreader bar assembly (component of ATG/Trailer).
  - Felt sheet, cattle hair, Type IV, 1/2-inch or suitable substitute.
  - Reach pendant, 11,000- or 25,000-pound capacity (2 each).
- **Personnel.** Two persons can prepare and rig the M1097 HMMWV in 10 minutes. Two persons can prepare and rig the generator set in 10 minutes.
- **Procedures.** Attach the ATG trailer to the truck by placing the lunette on the pintle hook and securing the latch with tape or Type III nylon cord. Secure the safety chains, cables, and hoses. Position the vehicle on level ground so both the truck and ATG trailer are in a straight line. The following procedures apply to this load:
  - **Preparation.** Prepare the load using the following steps:
    - Fold mirrors inward and tie together with Type III nylon cord. Remove the doors and the rear window. Secure the doors and window to the seats with Type III nylon cord.
    - Ensure all vents are closed and secured. Secure all loose equipment inside the vehicle with tape, Type III nylon cord, or tiedown straps.
    - Ensure the fuel tanks are not over 3/4 full. Inspect the fuel tank cap, oil filler cap, and battery caps for proper installation.
    - Engage the vehicle parking brake and put the transmission in neutral.

- Ensure the front wheels are pointed straight ahead. Tie down the steering wheel, using the securing device attached under the dashboard.
- Install the lift provisions on the outer ends of the rear bumper by removing the tiedown provisions located on the front bumper and installing on the outer ends of the rear bumper.
- Partially retract all landing legs and secure with Type III nylon cord.
- Secure all lids, doors, and caps with tape or Type III nylon cord.
- Ensure the parking brake is set.
- Route the hook portion of a CGU-1/B tiedown strap through the left rear inboard tiedown provision located near the pintle on the rear bumper of the truck. Loop the tiedown through the left front trailer lift provision located on the left front of the trailer. Attach the hook portion of the tiedown strap to the ratchet.

Note: Do not attach the tiedown strap to the rear wheels of the vehicle. The rear wheels may rotate during flight causing slack in the straps.

- Repeat the above procedure on the right side of the load.
- Tighten both CGU-1/B tiedown straps at the same time. Secure the excess strap and safety the ratchet handles in the closed position with tape.
- Pad the top Sensor Interface Unit (SIU) latch on the roadside to prevent sling leg interference.
- Cut and position pieces of plywood over the antenna boxes on top of the ATG. Secure the plywood by drilling holes and lacing Type III nylon cord through the holes to convenient places on the load. Ensure the plywood is securely tied to prevent it from flying off during flight.
- Attach a reach pendant on each sling set in accordance with FM 4-20.197.

▪ **Rigging.** Rig the load according to the steps in Figure 5-19.

▪ **Hookup.** Two hookup teams are required for this load. The forward hookup person stands on top of the HMMWV wheel well and places the reach pendant with apex fitting 1 onto the forward cargo hook. The aft hookup person stands on top of the trailer wheel well and places the reach pendant with apex fitting 2 onto the aft cargo hook. The hookup team then carefully dismounts the load and remains close to the load as the helicopter removes slack from the sling legs. If the CGU-1/B tiedown straps loosen up the load should be set down and the tiedown straps retightened. When successful hookup is assured, the hookup team quickly exits the area underneath the helicopter to the designated rendezvous point

---

***Note*.** Advise the aircraft commander to release the sling set apex fitting on the side of the HMMWV and ATG to prevent damage.

▪ **Derigging.** Derigging is the reverse of the preparation and rigging procedures.

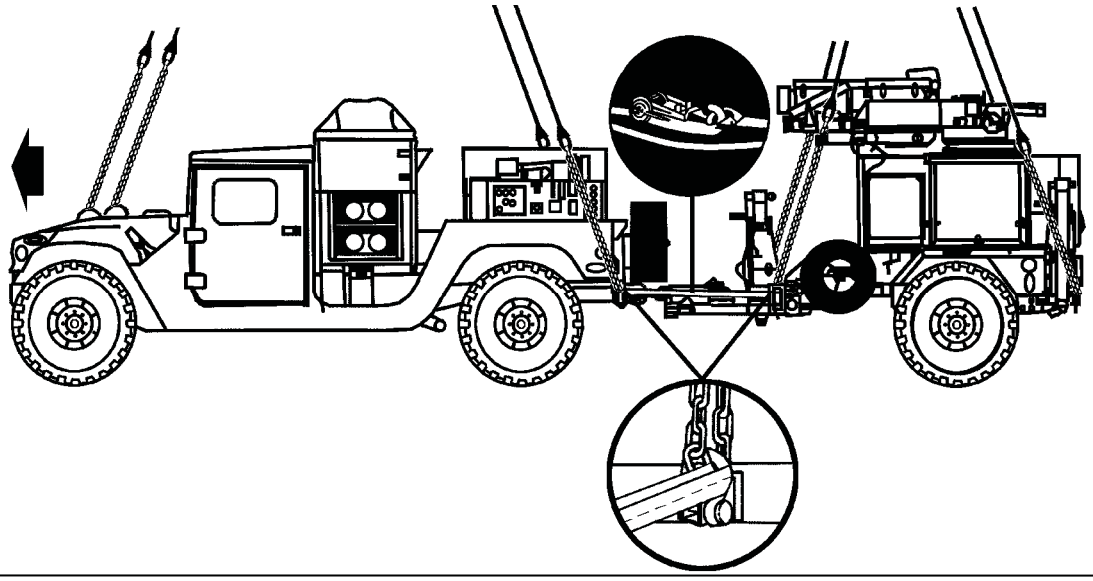

RIGGING STEPS

1. Position the reach pendant and apex fitting 1 on top of the roof of the vehicle. Route outer sling legs 1 and 2 to the front of the vehicle and inner sling legs 3 and 4 to the rear. Sling legs 1 and 3 must be on the left side of the load.

2. Loop the chain end of sling leg 1 through the left front lift provision that protrudes through the hood. Place the correct link from Table 5-19 in the grab hook. Repeat with sling leg 2 and the right front lift provision. Secure excess chain with tape or Type III nylon cord.

3. Loop the chain end of sling legs 3 and 4 through their respective lift provisions located on the outer ends of the rear bumper. Place the correct link from Table 5-19 in the grab hook.

4. Cluster and tie (breakaway technique) all sling legs together on top of the vehicle to prevent entanglement during hookup and lift-off.

5. Position the reach pendant and apex fitting of sling set 2 on top of the trailer. Route outer sling legs 1 and 2 to the front of the trailer and inner sling legs 3 and 4 to the rear of the trailer. Sling legs 1 and 3 must be on the left side of the load.

6. Route the chain end of sling leg 1 through the left side loop of the spreader bar, through the left front lift provision located on the front of the trailer, and back through the left loop of the spreader bar. Place the correct link from Table 5-19 in the grab hook. Repeat with sling leg 2 through the right spreader bar loop and right front lift provision. Tie or tape (breakaway technique) sling legs 1 and 2 together at 3-foot intervals on top of the trailer.

7. Loop the chain end of sling leg 3 through the left rear lift provision located on the rear of the trailer. Place the correct link from Table 5-19 in the grab hook. Repeat with sling leg 4 through the right rear lift provision. Secure excess chain with tape or Type III nylon cord. Tie or tape (breakaway technique) sling legs 3 and 4 together at 3-foot intervals on top of the trailer.

Figure 5-17. M1097 HMMWV with AN/MPQ-64 TQG and HMT with Sentinel ATG

M1097, 1-1/4 TON (HMMWV) WITH GENERATOR PALLET GROUP AND PU 799 G-85/TPQ-36 GENERATOR GROUP ON M116A3 TRAILER

5-21. The M1097, 1-1/4 Ton with Generator Pallet Group and PU 799 G-85/TPQ-36 Generator Group on M116A3 Trailer are rigged for dual-point sling load using the following procedures:

- **Applicability.** The following items in Table 5-20 are certified for the helicopter(s) listed in the following table by the US Army Natick Soldier Center:

Table 5-20. M1097, 1-1/4 Ton with Generator Pallet Group and PU 799 G-85/TPQ-36 Generator Group on M116A3 Trailer

Nomenclature	*Max Weight (Pounds)*	*Sling Set*	*Link Count Front/Rear*	*Type of Aircraft*
Truck, ! ¼-Ton, HMMWV M1097	7,400	10K	80/30	CH-47
G-85/TPQ-36 Generator Trailer Group	3,075	10K	52/36	CH-47

- **Materials.** The following materials are required to rig this load:
  - Sling set (10,000-pound capacity) (2 each).
  - Tape, adhesive, pressure-sensitive, 2-inch wide roll.
  - Cord, nylon, Type III, 550-pound breaking strength.
  - Webbing, cotton, 1/4-inch, 80-pound breaking strength.
  - Strap, cargo, tie-down, CGU-1/B (2 each, or more as required to secure cargo).
  - Felt sheet, cattle hair, Type IV, 1/2-inch or suitable substitute.
- **Personnel.** Two persons can prepare and rig the HMMWV in 15 minutes. Two persons can prepare and rig the generator set in 10 minutes.
- **Procedures.** Attach the generator set to the truck by placing the lunette on the pintle hook and secure the latch. Secure the safety chains, cables, and hoses with tape or Type III nylon cord. Position the vehicle on level ground so both the truck and generator set are in a straight line. The following procedures apply to this load:
  - **Preparation.** Prepare the load using the following steps:
    - Fold mirrors forward in front of the windshield and tie together with Type III nylon cord. Remove the doors and secure to the seats with Type III nylon cord.
    - Secure all equipment and cargo inside the truck with tiedown straps, tape, or Type III nylon cord.
    - Ensure the fuel tanks are not over 3/4 full. Inspect the fuel tank cap, oil filler cap, and battery caps for proper installation.
    - Engage the vehicle parking brake and put the transmission in neutral.
    - Ensure the front wheels are pointed straight ahead. Tie down the steering wheel, using the securing device attached under the dashboard.
    - Retract the lunette leg and secure with Type III nylon cord.
    - Secure all lids, doors, and caps with tape or Type III nylon cord.
    - Ensure the trailer parking brakes are set.
    - Route the hook portion of a CGU-1/B tiedown strap through the left rear inboard tiedown provision located near the pintle on the rear bumper of the truck and through the mounting bracket on the front of the trailer A-frame. Connect the hook to the ratchet of the CGU-1/B.
    - Repeat the above procedure on the right side of the load.
    - Tighten both CGU-1/B tiedown straps at the same time. Secure the excess strap and safety the ratchet handles in the closed position with tape.

- **Rigging.** Rig the load according to the steps in Figure 5-20.
- **Hookup.** Two hookup teams are required for this load. The static wand person discharges the static electricity with the static wand. The forward hookup person stands in the bed of the truck and places apex fitting 1 onto the forward cargo hook. The aft hookup person stands on the generator fender and places apex fitting 2 onto the aft cargo hook. The hookup team then carefully dismounts the trailer and remains close to the load as the helicopter removes slack from the sling legs. When successful hookup is assured, the hookup team quickly exits the area underneath the helicopter to the designated rendezvous point.
- **Derigging.** Derigging is the reverse of the preparation and rigging procedures.

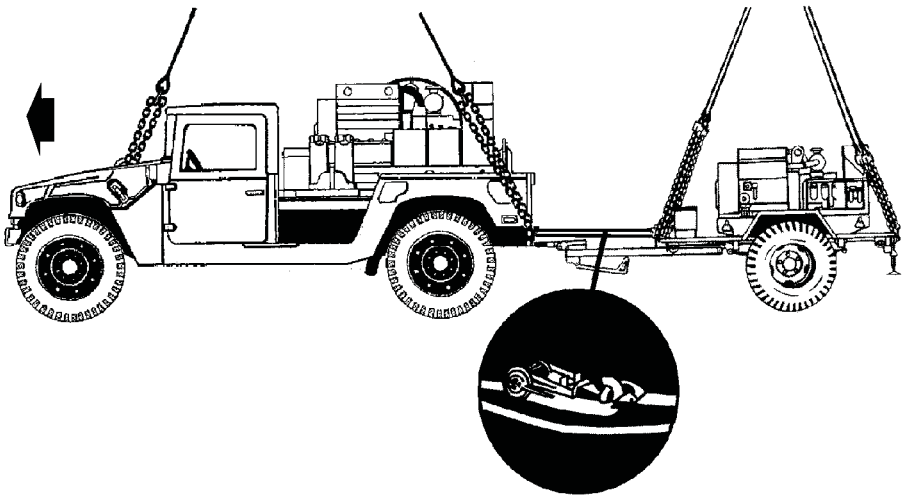

RIGGING STEPS

1. Position the apex fitting of sling set 1 in the bed of the vehicle. Route outer sling legs 1 and 2 to the front of the vehicle and inner sling legs 3 and 4 to the rear. Sling legs 1 and 3 must be on the left side of the load.

2. Loop the chain end of sling leg 1 through the left front lift provision that protrudes through the hood. Place the correct link from Table 5-20 in the grab hook. Repeat with sling leg 2 and the right front lift provision. Secure excess chain with tape or Type III nylon cord.

3. Route the chain end of sling leg 3 through the sling guide in the upper left corner of the tailgate. Loop the chain end through the left lift provision on the bumper and thread back through the sling guide in the tailgate. Place the correct link from Table 5-20 in the grab hook. Repeat with sling leg 4 and the right rear lift provision.

4. Cluster and tie (breakaway technique) all sling legs together on top of the vehicle to prevent entanglement during hookup and lift-off.

5. Position apex fitting of sling set 2 on the trailer but not on top of the generator. Route outer sling legs 1 and 2 to the front of the trailer and inner sling legs 3 and 4 to the rear. Sling legs 1 and 3 must be on the left side of the load.

Figure 5-20. M1097, 1-1/4 Ton with Generator Pallet Group and G-85/TPQ-36 Generator Group

RIGGING STEPS (Continued)
6. Loop the chain end of sling leg 1 through the left front lift provision located near the A-frame on the front of the trailer. Place the correct link from Table 5-20 in the grab hook. Repeat with sling leg 2 through the right front lift provision. Secure excess chain with tape or Type III nylon cord. 7. Route the chain end of sling leg 3 through the left rear lift provision. Place the correct link from Table 5-20 in the grab hook. Repeat with sling leg 4 through the right rear lift provision. Secure excess chain with tape or Type III nylon cord. 8. Pad the chains where they contact the load. 9. Cluster and tie (breakaway technique) all sling legs together on top of the trailer to prevent entanglement during hookup and lift-off.

Figure 5-20. M1097, 1-1/4 Ton with Generator Pallet Group and G-85/TPQ-36 Generator Group (Continued)

M1113 SHELTER CARRIER (HMMWV) WITH LMS SHELTER AND PU-798 GENERATOR ON M116A3 TRAILER

5-22. The M1113 shelter carrier with LMS shelter and PU-798 generator on M116A3 trailer are rigged for dual-point sling load using the following procedures:

- **Applicability.** The following items in Table 5-21 are certified for the helicopter(s) listed in the following table by the US Army Natick Soldier Center:

Table 5-21. M1113 Shelter Carrier with LMS Shelter and PU-798 Generator on M116A3 Trailer

Nomenclature	*Max Weight (Pounds)*	*Sling Set*	*Link Count Front/Rear*	*Type of Aircraft*
M1113 Shelter Carrier, HMMWV, with Digital Topographic Support System-Light (DTSS-L), AN/TYQ-67 (V)1	10,100	25K	35/5	CH-47
M1113 Shelter Carrier, HMMWV, with Integrated System Control (ISYSCOM) (V)1, (V)2	9,982	25K	35/5	CH-47
PU-798 Generator on M116A3 Trailer	2,457	25K	55/40	CH-47

- **Materials.** The following materials are required to rig this load:
  - Sling set (25,000-pound capacity) (2 each).
    - Additional chain length, part number 38850-00053-102, from a 25,000-pound capacity sling set (8 each).
    - Additional coupling link, part number 664241, from a 25,000-pound sling set (8 each).
  - Tape, adhesive, pressure-sensitive, 2-inch wide roll.
  - Cord, nylon, Type III, 550-pound breaking strength.
  - Webbing, cotton, 1/4-inch, 80-pound breaking strength.
  - Strap, cargo, tiedown, CGU-1/B (2 each).
  - Felt sheet, cattle hair, Type IV, 1/2-inch or suitable substitute.
- **Personnel.** Two persons can prepare and rig the truck in 15 minutes. Two persons can prepare and rig the generator set in 15 minutes.

- **Procedures.** Attach the generator set to the truck by placing the lunette on the pintle hook and securing the latch with tape or Type III nylon cord. Secure the safety chains, cables, and hoses. Position the vehicle on level ground so both the truck and generator set are in a straight line. Tie the front lift provisions on the trailer in the up position with Type I, 1/4-inch cotton webbing. The following procedures apply to this load:
  - **Preparation.** Prepare the load using the following steps:
    - Fold mirrors inward and tie together with Type III nylon cord. Remove the doors and secure to the seats with Type III nylon cord. Tape the windshield with an X formation from corner to corner.
    - Secure all loose equipment inside the shelter with tape, Type III nylon cord, or tie-down straps. Close and secure the door.
    - Secure all equipment and cargo inside the truck with tiedown straps, tape, or Type III nylon cord.
    - Ensure the fuel tanks are not over 3/4 full. Inspect the fuel tank cap, oil filler cap, and battery caps for proper installation.
    - Engage the vehicle parking brake and put the transmission in neutral.
    - Ensure the front wheels are pointed straight ahead. Tie down the steering wheel, using the securing device attached under the dashboard.
    - Install the lift provisions on the outer ends of the rear bumper by removing the tiedown provisions located on the front bumper and installing them on the outer ends of the rear bumper.
    - Partially retract all landing legs and secure in position with Type III nylon cord.
    - Retract the lunette leg and secure with Type III nylon cord.
    - Secure all lids, doors, and caps with tape or Type III nylon cord.
    - Ensure the trailer parking brake is set.
    - Route the hook portion of a CGU-1/B tiedown strap through the left rear inboard tiedown provision located near the pintle on the rear bumper of the truck and through the left front lift provision of the trailer. Connect the hook to the ratchet of the CGU-1/B.
    - Repeat the above procedure on the right side of the load.
    - Tighten both CGU-1/B tie-down straps at the same time. Secure the excess strap and safety the ratchet handles in the closed position with tape.

CAUTION

Do not connect the CGU-1/B tiedown strap around the truck's rear axle or wheel.

    - Connect one additional chain length to each chain on each sling set with a coupling link.
  - **Rigging.** Rig the load according to the steps in Figure 5-21.
  - **Hookup.** Two hookup teams are required for this load. The static wand person discharges the static electricity with the static wand. The forward hookup person kneels on top of the shelter and places apex fitting 1 onto the forward cargo hook. The aft hookup person stands on the generator fender and places apex fitting 2 onto the aft cargo hook. The hookup team then carefully dismounts the vehicle and the trailer and remains close to the load as the helicopter removes slack from the sling legs. When successful hookup is assured, the hookup team quickly exits the area underneath the helicopter to the designated rendezvous point.
  - **Derigging.** Derigging is the reverse of the preparation and rigging procedures.

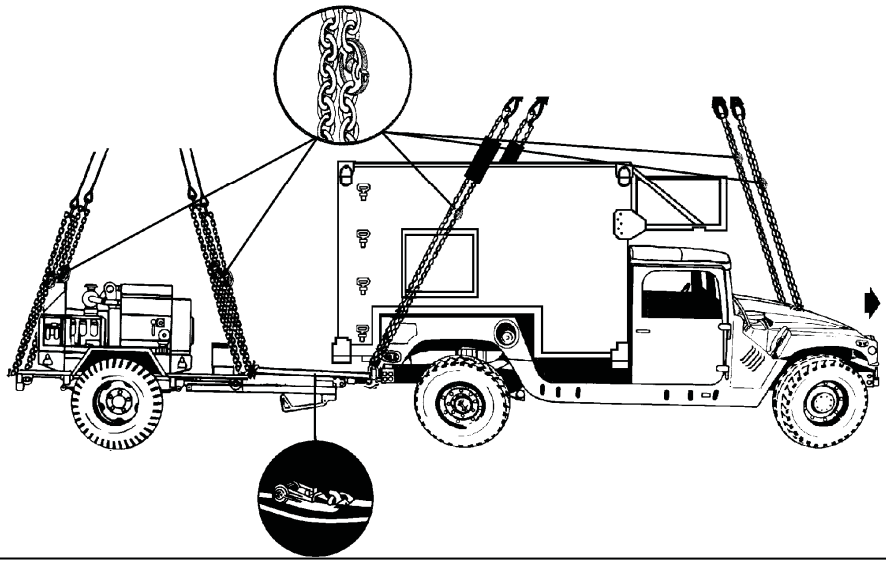

RIGGING STEPS

1. Position apex fitting on top of the shelter. Route outer sling legs 1 and 2 to the front of the vehicle and inner sling legs 3 and 4 to the rear. Sling legs 1 and 3 must be on the left side of the load.

2. Loop the chain end of sling leg 1 through the left front lift provision that protrudes through the hood from inboard to outboard. Place the correct link from Table 5-21 in the grab hook. Repeat with sling leg 2 and the right front lift provision. Secure excess chain with tape or Type III nylon cord.

3. Loop the chain end of the sling legs through their respective lift provisions located on the outer ends of the rear bumper. Place the correct link from Table 5-21 in the grab hook. Secure excess chain with tape or Type III nylon cord.

4. Pad the chain where it contacts the shelter sides.

5. Cluster and tie (breakaway technique) all sling legs together on top of the vehicle to prevent entanglement during hookup and lift-off.

6. Position the apex fitting of sling set 2 on top of the generator set. Route outer sling legs 1 and 2 to the front of the generator and inner sling legs 3 and 4 to the rear of the generator. Sling legs 1 and 3 must be on the left side of the load.

7. Loop the chain end of sling leg 1 through the left front lift provision located on the front of the trailer. Place the correct link from Table 5-21 in the grab hook. Repeat with sling leg 2 through the right front lift provision. Secure excess chain with tape or Type III nylon cord.

8. Loop the chain end of sling leg 3 through the left rear lift provision. Place the correct link from Table 5-21 in the grab hook. Repeat with sling leg 4 through the right rear lift provision. Secure excess chain with tape or Type III nylon cord.

9. Cluster and tie tape (breakaway technique) all sling legs together on top of the trailer to prevent entanglement during hookup and lift-off.

Figure 5-21. M1113 Shelter Carrier (HMMWV) with LMS Shelter and PU-798 Generator on M116A3 Trailer

M1097A2 SHELTER CARRIER (HMMWV) WITH LMS SHELTER USING SHELTER LIFT RINGS AS SLING GUIDES AND PU-798 GENERATOR ON M116A3 TRAILER

5-23. The M1097A2 shelter carriers with LMS shelter using shelter lift rings as sling guides and PU-798 generator on M116A3 trailer are rigged for dual-point sling load using the following procedures:

- **Applicability.** The following items in Table 5-22 are certified for the helicopter(s) listed in the following table by the US Army Natick Soldier Center:

Table 5-22. M1097A2 Shelter Carrier with LMS Shelter Using Shelter Lift Rings as Sling Guides and PU-798 Generator on M116A3 Trailer

Nomenclature	*Max Weight (Pounds)*	*Sling Set*	*Link Count Front/Rear*	*Type of Aircraft*
Analysis Control Team-Enclave, AN/TYQ-103	9,960	25K	60/5	CH-47
PU-798 Generator on M116A3 Trailer	2,600	10K	90/75	CH-47

- **Materials.** The following materials are required to rig this load:
  - Sling set (25,000-pound capacity) (2 each).
    - Additional chain length, part number 38850-00053-102, from a 25,000-pound capacity sling set (4 each).
    - Additional coupling link, part number 664241, from a 25,000-pound sling set (4 each).
  - Sling set (10,000-pound capacity) with one additional apex fitting.
    - Chain length, part number 38850-00053-101, from a 10,000-pound capacity sling set (4 each).
    - Coupling link, part number 577-0615, from a 10,000-pound sling set (4 each).
  - Tape, adhesive, pressure-sensitive, 2-inch wide roll.
  - Cord, nylon, Type III, 550-pound breaking strength.
  - Webbing, cotton, 1/4-inch, 80-pound breaking strength.
  - Strap, cargo, tiedown, CGU-1/B (2 each).
- **Personnel.** Two persons can prepare and rig the truck in 20 minutes. Two persons can prepare and rig the generator set in 15 minutes.
- **Procedures.** Attach the generator set to the truck by placing the lunette on the pintle hook and securing the latch with tape or Type III nylon cord. Secure the safety chains, cables, and hoses. Position the vehicle on level ground so both the truck and generator set are in a straight line. Tie the front lift provisions on the trailer in the up position with Type I. 1/4-inch cotton webbing. The following procedures apply to this load:
  - **Preparation.** Prepare the load using the following steps:
    - Fold mirrors inward and tie together with Type III nylon cord. Remove the doors and secure to the seats with Type III nylon cord. Tape the windshield with an X formation from corner to corner.
    - Secure all loose equipment inside the shelter with tape, Type III nylon cord, or tie-down straps. Close and secure the door.
    - Secure all equipment and cargo inside the truck with tiedown straps, tape, or Type III nylon cord.

- Ensure the fuel tanks are not over 3/4 full. Inspect the fuel tank cap, oil filler cap, and battery caps for proper installation.
- Engage the vehicle parking brake and put the transmission in neutral.
- Ensure the front wheels are pointed straight ahead. Tie down the steering wheel, using the securing device attached under the dashboard.
- Install the lift provisions on the outer ends of the rear bumper by removing the tiedown provisions located on the front bumper and installing them on the outer ends of the rear bumper.
- Tie the shelter's rear lift rings together with Type III nylon cord across the top of the shelter. The lift rings should be positioned facing the front of the vehicle.
- Partially retract all landing legs and secure in position with Type III nylon cord.
- Retract the lunette leg and secure with Type III nylon cord.
- Secure all lids, doors, and caps with tape or Type III nylon cord.
- Ensure the trailer parking brake is set.
- Route the hook portion of a CGU-1/B tiedown strap through the left rear inboard tiedown provision located near the pintle on the rear bumper of the truck and through the left front lift provision of the trailer. Connect the hook to the ratchet of the CGU-1/B.
- Repeat the above procedure on the right side of the load.
- Tighten both CGU-1/B tie-down straps at the same time. Secure the excess strap and safety the ratchet handles in the closed position with tape.

CAUTION

Do not connect the CGU-1/B tiedown strap around the truck's rear axle or wheel.

- Connect one additional chain length to each chain on each sling set with a coupling link.

- **Rigging.** Rig the load according to the steps in Figure 5-22.
- **Hookup.** Two hookup teams are required for this load. The static wand person discharges the static electricity with the static wand. The forward hookup person kneels on top of the shelter and places apex fitting 1 onto the forward cargo hook. The aft hookup person stands on the generator fender and places apex fitting 2 onto the aft cargo hook. The hookup team then carefully dismounts the vehicle and the trailer and remains close to the load as the helicopter removes slack from the sling legs. When successful hookup is assured, the hookup team quickly exits the area underneath the helicopter to the designated rendezvous point.
- **Derigging.** Derigging is the reverse of the preparation and rigging procedures.

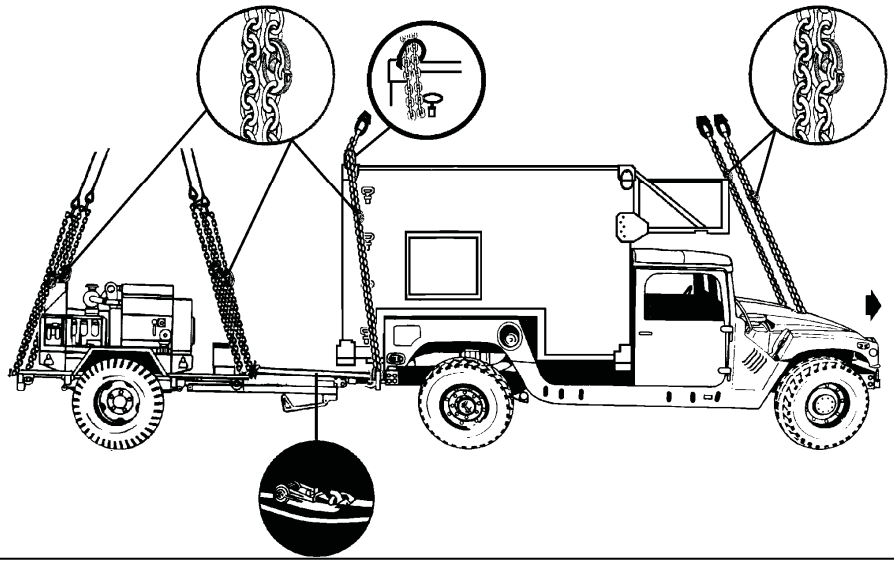

RIGGING STEPS

1. Position apex fitting on top of the shelter. Route outer sling legs 1 and 2 to the front of the vehicle and inner sling legs 3 and 4 to the rear. Sling legs 1 and 3 must be on the left side of the load.

2. Loop the chain end of sling leg 1 through the left front lift provision that protrudes through the hood from inboard to outboard. Place the correct link from Table 5-22 in the grab hook. Repeat with sling leg 2 and the right front lift provision. Secure excess chain with tape or Type III nylon cord.

3. Route the right sling leg chain through the right rear shelter lift ring to the right rear lift provision located on the outer end of the rear bumper. Continue routing the chain back through the right rear shelter lift ring and back to the grab hook. Place the correct link from Table 5-22 in the grab hook. Repeat the procedure using the left sling leg chain, left rear shelter lift ring, and the left lift provision located on the end of the bumper.

4. Cluster and tie (breakaway technique) all sling legs together on top of the vehicle to prevent entanglement during hookup and lift-off.

5. Position the apex fitting of sling set 2 on top of the generator set. Route outer sling legs 1 and 2 to the front of the generator and inner sling legs 3 and 4 to the rear of the generator. Sling legs 1 and 3 must be on the left side of the load.

6. Loop the chain end of sling leg 1 through the left front lift provision located on the front of the trailer. Place the correct link from Table 5-22 in the grab hook. Repeat with sling leg 2 through the right front lift provision. Secure excess chain with tape or Type III nylon cord.

7. Loop the chain end of sling leg 3 through the left rear lift provision. Place the correct link from Table 5-22 in the grab hook. Repeat with sling leg 4 through the right rear lift provision. Secure excess chain with tape or Type III nylon cord.

8. Cluster and tie (breakaway technique) all sling legs together on top of the trailer to prevent entanglement during hookup and lift-off.

Figure 5-22. M1097A2 Shelter Carrier with LMS Shelter Using Shelter Lift Rings as Sling Guides and PU-798 Generator on M116A3 Trailer

M1113 SHELTER CARRIER (HMMWV) WITH LMS SHELTER USING SHELTER LIFT RINGS AS SLING GUIDES AND PU-798 GENERATOR ON M116A3 TRAILER

5-24. The M1113 shelter carriers with LMS shelter using shelter lift rings as sling guides and PU-798 generator on M116A3 trailer are rigged for dual-point sling load using the following procedures:

- **Applicability.** The following items in Table 5-23 are certified for the helicopter(s) listed in the following table by the US Army Natick Soldier Center:

Table 5-23. M1113 Shelter Carrier with LMS Shelter Using Shelter Lift Rings as Sling Guides and PU-798 Generator on M116A3 Trailer

Nomenclature	*Max Weight (Pounds)*	*Sling Set*	*Link Count Front/Rear*	*Type of Aircraft*
Analysis Control Team-Enclave, AN/TYQ-103	11,500	25K	60/5	CH-47
PU-798 Generator on M116A3 Trailer	2,600	10K	90/75	CH-47

- **Materials.** The following materials are required to rig this load:
  - Sling set (25,000-pound capacity) (2 each).
    - Chain length, part number 38850-00053-102, from a 25,000-pound capacity sling set (4 each).
    - Coupling link, part number 664241, from a 25,000-pound sling set (4 each).
  - Sling set (10,000-pound capacity) with one additional apex fitting.
    - Chain length, part number 38850-00053-101, from a 10,000-pound capacity sling set (4 each).
    - Coupling link, part number 577-0615, from a 10,000-pound sling set (4 each).
  - Tape, adhesive, pressure-sensitive, 2-inch wide roll.
  - Cord, nylon, Type III, 550-pound breaking strength.
  - Webbing, cotton, 1/4-inch, 80-pound breaking strength.
  - Strap, cargo, tiedown, CGU-1/B (2 each).
- **Personnel.** Two persons can prepare and rig the truck in 20 minutes. Two persons can prepare and rig the generator set in 15 minutes.
- **Procedures.** Attach the generator set to the truck by placing the lunette on the pintle hook and securing the latch with tape or Type III nylon cord. Secure the safety chains, cables, and hoses. Position the vehicle on level ground so both the truck and generator set are in a straight line. Tie the front lift provisions on the trailer in the up position with Type I, 1/4-inch cotton webbing. The following procedures apply to this load:
  - **Preparation.** Prepare the load using the following steps:
    - Fold mirrors inward and tie together with Type III nylon cord. Remove the doors and secure to the seats with Type III nylon cord. Tape the windshield with an X formation from corner to corner.
    - Secure all loose equipment inside the shelter with tape, Type III nylon cord, or tie-down straps. Close and secure the door.
    - Secure all equipment and cargo inside the truck with tiedown straps, tape, or Type III nylon cord.
    - Ensure the fuel tanks are not over 3/4 full. Inspect the fuel tank cap, oil filler cap, and battery caps for proper installation.

- Engage the vehicle parking brake and put the transmission in neutral.
- Ensure the front wheels are pointed straight ahead. Tie down the steering wheel, using the securing device attached under the dashboard.
- Install the lift provisions on the outer ends of the rear bumper by removing the tiedown provisions located on the front bumper and installing them on the outer ends of the rear bumper.
- Tie the shelter's rear lift rings together with Type III nylon cord across the top of the shelter. The lift rings should be positioned facing the front of the vehicle.
- Partially retract all landing legs and secure in position with Type III nylon cord.
- Retract the lunette leg and secure with Type III nylon cord.
- Secure all lids, doors, and caps with tape or Type III nylon cord.
- Ensure the trailer parking brake is set.
- Route the hook portion of a CGU-1/B tiedown strap through the left rear inboard tiedown provision located near the pintle on the rear bumper of the truck and through the left front lift provision of the trailer. Connect the hook to the ratchet of the CGU-1/B.
- Repeat the above procedure on the right side of the load.
- Tighten both CGU-1/B tie-down straps at the same time. Secure the excess strap and safety the ratchet handles in the closed position with tape.

CAUTION

Do not connect the CGU-1/B tiedown strap around the truck's rear axle or wheel.

- Connect one additional chain length to each chain on each sling set with a coupling link.

- **Rigging.** Rig the load according to the steps in Figure 5-23.
- **Hookup.** Two hookup teams are required for this load. The static wand person discharges the static electricity with the static wand. The forward hookup person kneels on top of the shelter and places apex fitting 1 onto the forward cargo hook. The aft hookup person stands on the generator fender and places apex fitting 2 onto the aft cargo hook. The hookup team then carefully dismounts the vehicle and the trailer and remains close to the load as the helicopter removes slack from the sling legs. When successful hookup is assured, the hookup team quickly exits the area underneath the helicopter to the designated rendezvous point.
- **Derigging.** Derigging is the reverse of the preparation and rigging procedures.

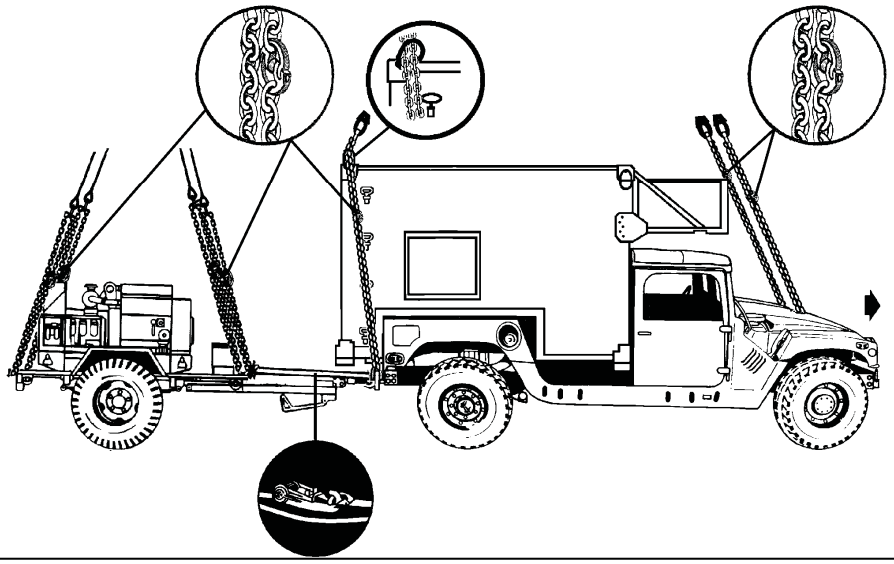

RIGGING STEPS

1. Position apex fitting on top of the shelter. Route outer sling legs 1 and 2 to the front of the vehicle and inner sling legs 3 and 4 to the rear. Sling legs 1 and 3 must be on the left side of the load.

2. Loop the chain end of sling leg 1 through the left front lift provision that protrudes through the hood from inboard to outboard. Place the correct link from Table 5-23 in the grab hook. Repeat with sling leg 2 and the right front lift provision. Secure excess chain with tape or Type III nylon cord.

3. Route the right sling leg chain through the right rear shelter lift ring to the right rear lift provision located on the outer end of the rear bumper. Continue routing the chain back through the right rear shelter lift ring and back to the grab hook. Place the correct link from Table 5-23 in the grab hook. Repeat the procedure using the left sling leg chain, left rear shelter lift ring, and the left lift provision located on the end of the bumper.

4. Cluster and tie (breakaway technique) all sling legs together on top of the vehicle to prevent entanglement during hookup and lift-off.

5. Position the apex fitting of sling set 2 on top of the generator set. Route outer sling legs 1 and 2 to the front of the generator and inner sling legs 3 and 4 to the rear of the generator. Sling legs 1 and 3 must be on the left side of the load.

6. Loop the chain end of sling leg 1 through the left front lift provision located on the front of the trailer. Place the correct link from Table 5-23 in the grab hook. Repeat with sling leg 2 through the right front lift provision. Secure excess chain with tape or Type III nylon cord.

7. Loop the chain end of sling leg 3 through the left rear lift provision. Place the correct link from Table 5-23 in the grab hook. Repeat with sling leg 4 through the right rear lift provision. Secure excess chain with tape or Type III nylon cord.

8. Cluster and tie tape (breakaway technique) all sling legs together on top of the trailer to prevent entanglement during hookup and lift-off.

Figure 5-23. M1113 Shelter Carrier with LMS Shelter Using Shelter Lift Rings as Sling Guides and PU-798 Generator on M116A3 Trailer

M1097A2 SHELTER CARRIER (HMMWV) WITH S-250 SHELTER AND TRAILER GENERATOR SETS ON M116A3 TRAILER

5-25. The M1097A2 shelter carrier with S-250 shelter and trailer generator sets on M116A3 trailer are rigged for dual-point sling load using the following procedures:

- **Applicability.** The following items in Table 5-24 are certified for the helicopter(s) listed in the following table by the US Army Natick Soldier Center:

Table 5-24. M1097A2 Shelter Carrier with S-250 Shelter and Trailer Generator Sets on M116A3 Trailer

Nomenclature	*Max Weight (Pounds)*	*Sling Set*	*Link Count Front/Rear*	*Type of Aircraft*
Truck, (HMMWV) M1097A2 with LOS (V1) in S-250 Shelter	8,246	10K	80/30	CH-47
Truck, (HMMWV) M1097A2 with Small Extension Node Switch, AN/TTC-48E (V)2	8,354	10K	80/30	CH-47
PU-797 Generator Set on M116A3 Trailer	2,320	10K	10/15	CH-47
PU-798 Generator Set on M116A3 Trailer	2,457	10K	10/15	CH-47

- **Materials.** The following materials are required to rig this load:
  - Sling set (10,000-pound capacity) (2 each).
    - Additional chain length, part number 38850-00053-101, from a 10,000-pound capacity sling set (8 each).
    - Additional coupling link, part number 38850-00053-101, from a 10,000-pound sling set (8 each).
  - Tape, adhesive, pressure-sensitive, 2-inch wide roll.
  - Cord, nylon, Type III, 550-pound breaking strength.
  - Webbing, cotton, 1/4-inch, 80-pound breaking strength.
  - Strap, cargo, tiedown, CGU-1/B (2 each).
  - Felt sheet, cattle hair, Type IV, 1/2-inch or suitable substitute.
- **Personnel.** Two persons can prepare and rig the M1097A2 HMMWV in 15 minutes. Two persons can prepare and rig the generator set in 10 minutes.
- **Procedures.** Attach the generator set to the truck by placing the lunette on the pintle hook and securing the latch with tape or Type III nylon cord. Secure the safety chains, cables, and hoses. Position the vehicle on level ground so both the truck and generator set are in a straight line. The following procedures apply to this load:
  - **Preparation.** Prepare the load using the following steps:
    - Fold mirrors inward and tie together with Type III nylon cord. Remove the doors and secure to the seats with Type III nylon cord.
    - Secure all loose equipment inside the shelter with tape, Type III nylon cord, or tiedown straps. Close and secure the door.
    - Secure all equipment and cargo inside the truck with tiedown straps, tape, or Type III nylon cord. Secure the doors shut if installed.
    - Ensure the fuel tanks are not over 3/4 full. Inspect the fuel tank cap, oil filler cap, and battery caps for proper installation.
    - Engage the vehicle parking brake and put the transmission in neutral.
    - Ensure the front wheels are pointed straight ahead. Tie down the steering wheel, using the securing device attached under the dashboard.
    - Partially retract all landing legs and secure in position with Type III nylon cord.

- Retract the lunette leg and secure with Type III nylon cord.
- Secure all lids, doors, and caps with tape or Type III nylon cord.
- Ensure the parking brakes are set.
- Route the hook portion of a CGU-1/B tiedown strap through the left rear inboard tiedown provision located near the pintle on the rear bumper of the truck and through the mounting bracket on the front of the trailer A-frame. Connect the hook to the ratchet of the CGU-1/B.
- Repeat the above procedure on the right side of the load.
- Tighten both CGU-1/B tie-down straps at the same time. Secure the excess strap and safety the ratchet handles in the closed position with tape.
- Connect one additional chain length to each chain on each sling set with a coupling link.

CAUTION

Do not connect the CGU-1/B tiedown strap around the truck's rear axle or wheel.

- **Rigging.** Rig the load according to the steps in Figure 5-24.
- **Hookup.** Two hookup teams are required for this load. The static wand person discharges the static electricity with the static wand. The forward hookup person kneels on top of the shelter and places apex fitting 1 onto the forward cargo hook. The aft hookup person stands on the generator fender and places apex fitting 2 onto the aft cargo hook. The hookup team then carefully dismounts the trailer and remains close to the load as the helicopter removes slack from the sling legs. When successful hookup is assured, the hookup team quickly exits the area underneath the helicopter to the designated rendezvous point.
- **Derigging.** Derigging is the reverse of the preparation and rigging procedures.

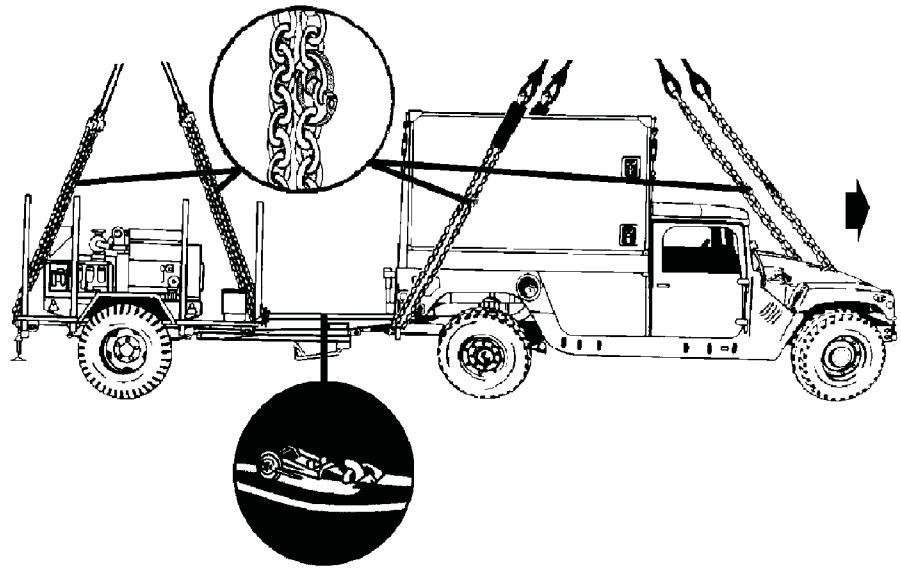

Figure 5-20. M1097A2 Shelter Carrier with S-250 Shelter and Trailer Generator Sets on M116A3 Trailer

RIGGING STEPS
1. Position apex fitting on top of the shelter. Route outer sling legs 1 and 2 to the front of the vehicle and inner sling legs 3 and 4 to the rear. Sling legs 1 and 3 must be on the left side of the load. 2. Loop the chain end of sling leg 1 through the left front lift provision that protrudes through the hood from inboard to outboard. Place the correct link from Table 5-24 in the grab hook. Repeat with sling leg 2 and the right front lift provision. Secure excess chain with tape or Type III nylon cord. 3. Loop the chain end of the sling legs through their respective lift provisions located on the outer ends of the rear bumper. Place the correct link from Table 5-24 in the grab hook. Secure excess chain with tape or Type III nylon cord. 4. Pad the chain where it contacts the shelter sides. 5. Cluster and tie (breakaway technique) all sling legs together on top of the vehicle to prevent entanglement during hookup and lift-off. 6. Position the apex fitting of sling set 2 on top of the generator set. Route outer sling legs 1and 2 to the front of the generator and inner sling legs 3 and 4 to the rear of the generator. Sling legs 1 and 3 must be on the left side of the load. 7. Loop the chain end of sling leg 1 through the left front lift provision located on the front of the trailer. Place the correct link from Table 5-24 in the grab hook. Repeat with sling leg 2 through the right front lift provision. Secure excess chain with tape or Type III nylon cord. 8. Loop the chain end of sling leg 3 through the left rear lift provision. Place the correct link from Table 5-24 in the grab hook. Repeat with sling leg 4 through the right rear lift provision. Secure excess chain with tape or Type III nylon cord. 9. Cluster and tie (breakaway technique) all sling legs together on top of the trailer to prevent entanglement during hookup and lift-off.

Figure 5-24. M1097A2 Shelter Carrier with S-250 Shelter and Trailer Generator Sets on M116A3 Trailer (Continued)

M1097A2 (HMMWV) WITH ADVANCED FIELD ARTILLERY TACTICAL DATA SYSTEM (AFATDS) SOFT TOP INSTALLATION KIT (STIK) AND PU-797 GENERATOR SET ON M116A3 TRAILER

5-26. The M1097A2 with advanced field artillery tactical data system soft top installation kit and PU-797 generator set on M116A3 trailer are rigged for dual-point sling load using the following procedures:

- **Applicability.** The following items in Table 5-25 are certified for the helicopter(s) listed in the following table by the US Army Natick Soldier Center:

Table 5-25. M1097A2 with Advanced Field Artillery Tactical Data System Soft Top Installation Kit and PU-797 Generator Set on M116A3 Trailer

Nomenclature	*Max Weight (Pounds)*	*Sling Set*	*Link Count Front/Rear*	*Type of Aircraft*
System 2: CHS-2 AN/GYG-3(V)1, with SINGARS AN/VRC-90, AN/VRC-92 and EPLRS Installed in the Bed. AN/VRC-92 Installed in Cab.	8,103	25K	50/3	CH-47
System 3: CHS-2 AN/GYG-3(V)3, with SINGARS AN/VRC-90, AN/VRC-92 and EPLRS Installed in the Bed. AN/VRC-92 Installed in Cab.	8,366	25K	50/3	CH-47
System 4: 2 each AN/GYK-37(V)2, with SINGARS AN/VRC-89, AN/VRC-92 and EPLRS.	7,790	25K	50/3	CH-47
PU-797 Generator Set on M116A3 Trailer	1,800	25K	15/20	CH-47

- **Materials.** The following materials are required to rig this load:
  - Sling set (25,000-pound capacity) (2 each).
    - Additional chain length, part number 38850-00053-102, from a 25,000-pound capacity sling set (8 each).
    - Additional coupling link, NSN 4010-01-041-9751, from a 25,000-pound sling set (8 each).
  - Tape, adhesive, pressure-sensitive, 2-inch wide roll.
  - Cord, nylon, Type III, 550-pound breaking strength.
  - Webbing, cotton, 1/4-inch, 80-pound breaking strength.
  - Strap, cargo, tiedown, CGU-1/B (2 each).
  - Sling guides (included as part of the HMMWV STIK) (2 each).
  - Reach pendant (25,000-pound capacity) (2 each).
- **Personnel.** Two persons can prepare and rig the M1097A2 HMMWV in 15 minutes. Two persons can prepare and rig the generator set in 10 minutes.
- **Procedures.** Attach the generator set to the truck by placing the lunette on the pintle hook and securing the latch with tape or Type III nylon cord. Secure the safety chains, cables, and hoses. Position the vehicle on level ground so both the truck and generator set are in a straight line. The following procedures apply to this load:
  - **Preparation.** Prepare the load using the following steps:
    - Fold mirrors inward and tie together with Type III nylon cord. Remove the doors and secure to the seats with Type III nylon cord.
    - Secure all equipment and cargo inside the truck with tiedown straps, tape, or Type III nylon cord.
    - Ensure the fuel tanks are not over 3/4 full. Inspect the fuel tank cap, oil filler cap, and battery caps for proper installation.
    - Engage the vehicle parking brake and put the transmission in neutral.
    - Ensure the front wheels are pointed straight ahead. Tie down the steering wheel, using the securing device attached under the dashboard.
    - Partially retract all landing legs and secure in position with Type III nylon cord.
    - Retract the lunette leg and secure with Type III nylon cord.
    - Secure all lids, doors, and caps with tape or Type III nylon cord.
    - Ensure the parking brakes are set.

- Route the hook portion of a CGU-1/B tiedown strap through the left rear inboard tiedown provision located near the pintle on the rear bumper of the truck and through the mounting bracket on the front of the trailer A-frame. Connect the hook to the ratchet of the CGU-1/B.
- Repeat the above procedure on the right side of the load.
- Tighten both CGU-1/B tie-down straps at the same time. Secure the excess strap and safety the ratchet handles in the closed position with tape.
- Install a reach pendant on each apex fitting.
- Connect one additional chain length to each chain on each sling set with a coupling link.
- Ensure the STIK sling guides are properly installed.

CAUTION

Do not connect the CGU-1/B tiedown strap around the truck's rear axle or wheel.

- **Rigging.** Rig the load according to the steps in Figure 5-25.
- **Hookup.** Two hookup teams are required for this load. The static wand person discharges the static electricity with the static wand. The forward hookup person kneels on top of the truck and places apex fitting 1 onto the forward cargo hook. The aft hookup person stands on the generator fender and places apex fitting 2 onto the aft cargo hook. The hookup team then carefully dismounts the trailer and remains close to the load as the helicopter removes slack from the sling legs. When successful hookup is assured, the hookup team quickly exits the area underneath the helicopter to the designated rendezvous point.
- **Derigging**. Derigging is the reverse of the preparation and rigging procedures.

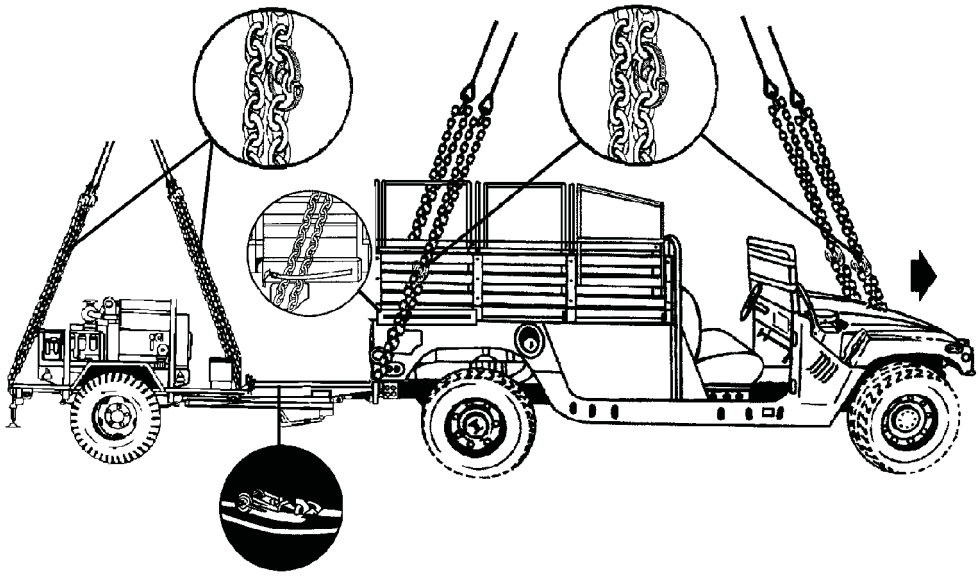

Figure 5-25. M1097A2 with Advanced Field Artillery Tactical Data System Soft Top Installation Kit and PU-797 Generator Set on M116A3 Trailer

RIGGING STEPS
1. Position apex fitting on top of the truck. Route outer sling legs 1 and 2 to the front of the vehicle and inner sling legs 3 and 4 to the rear. Sling legs 1 and 3 must be on the left side of the load. 2. Loop the chain end of sling leg 1 through the left front lift provision that protrudes through the hood from inboard to outboard. Place the correct link from Table 5-25 in the grab hook. Repeat with sling leg 2 and the right front lift provision. Secure excess chain with tape or Type III nylon cord. 3. Loop the chain end of sling leg 3 through the left guide, through the left rear lift provision located on the outer ends of the rear bumper, and back through the left sling guide. Place the correct link from Table 5-25 in the grab hook. Repeat with sling leg 4 and the right sling guide and right rear lift provision. Secure excess chain with tape or Type III nylon cord. 4. Cluster and tie (breakaway technique) all sling legs together on top of the vehicle to prevent entanglement during hookup and lift-off. 5. Position the apex fitting of sling set 2 on top of the generator set. Route outer sling legs 1and 2 to the front of the generator and inner sling legs 3 and 4 to the rear of the generator. Sling legs 1 and 3 must be on the left side of the load. 6. Loop the chain end of sling leg 1 through the left front lift provision located on the front of the trailer. Place the correct link from Table 5-25 in the grab hook. Repeat with sling leg 2 through the right front lift provision. Secure excess chain with tape or Type III nylon cord. 7. Loop the chain end of sling leg 3 through the left rear lift provision. Place the correct link from Table 5-25 in the grab hook. Repeat with sling leg 4 through the right rear lift provision. Secure excess chain with tape or Type III nylon cord. 8. Cluster and tie or tape (breakaway technique) all sling legs together on top of the trailer to prevent entanglement during hookup and lift-off.

Figure 5-25. M1097A2 with Advanced Field Artillery Tactical Data System Soft Top Installation Kit and PU-797 Generator Set on M116A3 Trailer (Continued)

M1097 (HMMWV) WITH METEOROLOGICAL MEASURING SET IN LMS SHELTER AND AN/MJQ-35 POWER PLANT ON M116A3 TRAILER

5-27. The M1097 with meteorological measuring set in LMS shelter and AN/MJQ-35 power plant on M116A3 trailer are rigged for dual-point sling load using the following procedures:

- **Applicability.** The following items in Table 5-26 are certified for the helicopter(s) listed in the following table by the US Army Natick Soldier Center:

Table 5-26. M1097 with Meteorological Measuring Set in LMS Shelter and AN/MJQ-35 Power Plant on M116A3 Trailer

Nomenclature	*Max Weight (Pounds)*	*Sling Set*	*Link Count Front/Rear*	*Type of Aircraft*
Meteorological Measuring Set, AN/TMQ-41 in LMS on M1097	8,200	25K	40/3	CH-47
AN/MJQ-35 Power Plant with two (2) MEP-802A, 5kW, 60 Hz Generator Sets on M116A3 Trailer	3,737	25K	40/60	CH-47

- **Materials.** The following materials are required to rig this load:
  - Sling set (25,000-pound capacity) (2 each).
    - Additional chain length, part number 38850-00053-102, from a 25,000-pound capacity sling set (8 each).
    - Additional coupling link, NSN 4010-01-041-9751, from a 25,000-pound sling set (8 each).
  - Tape, adhesive, pressure-sensitive, 2-inch wide roll.
  - Cord, nylon, Type III, 550-pound breaking strength.
  - Webbing, cotton, 1/4-inch, 80-pound breaking strength.
  - Strap, cargo, tiedown, CGU-1/B (2 each).
  - Felt sheet, cattle hair, Type IV, 1/2-inch or suitable substitute.
- **Personnel.** Two persons can prepare and rig the M1097 HMMWV in 15 minutes. Two persons can prepare and rig the generator trailer in 15 minutes.
- **Procedures.** Attach the trailer to the truck by placing the lunette on the pintle hook and securing the latch with tape or Type III nylon cord. Secure the safety chains, cables, and hoses. Position the vehicle on level ground so both the truck and trailer are in a straight line. The following procedures apply to this load:
  - **Preparation.** Prepare the load using the following steps:
    - Fold mirrors inward and tie together with Type III nylon cord.
    - Secure all equipment and cargo inside the truck and trailer with tiedown straps, tape, or Type III nylon cord.
    - Secure all loose equipment inside the shelter with tape, Type III nylon cord, or tiedown straps. Close and secure the door.
    - Ensure the fuel tank is not over 3/4 full. Inspect the fuel tank cap, oil filler cap, and battery caps for proper installation.
    - Engage the vehicle parking brake and put the transmission in neutral.
    - Ensure the front wheels are pointed straight ahead. Tie down the steering wheel, using the securing device attached under the dashboard.
    - Partially retract all landing legs and secure with Type III nylon cord.
    - Retract the lunette leg and secure with Type III nylon cord.
    - Secure all lids, doors, and caps with tape or Type III nylon cord.
    - Ensure the trailer parking brakes are set.
    - Route the hook portion of a CGU-1/B tiedown strap through the left rear inboard tiedown provision located near the pintle on the rear bumper of the truck and through the mounting bracket on the front of the trailer A-frame. Connect the hook to the ratchet of the CGU-1/B.
    - Repeat the above procedure on the right side of the load.
    - Tighten both CGU-1/B tiedown straps at the same time. Secure the excess strap and safety the ratchet handles in the closed position with tape.
    - Connect one additional chain length to each chain on each sling set with a coupling link.

CAUTION

Do not connect the CGU-1/B tiedown strap around the truck's rear axle or wheel, or front lift provisions on the trailer.

- **Rigging.** Rig the load according to the steps in Figure 5-26.
- **Hookup.** Two hookup teams are required for this load. The static wand person discharges the static electricity with the static wand. The forward hookup person kneels on the top of the shelter and places apex fitting 1 onto the forward cargo hook. The aft hookup person stands on the generator fender and places apex fitting 2 onto the aft cargo hook. The hookup team then carefully dismounts the load and remains close to the load as the helicopter removes slack from the sling legs. When successful hookup is assured, the hookup team quickly exits the area underneath the helicopter to the designated rendezvous point.
- **Derigging.** Derigging is the reverse of the preparation and rigging procedures.

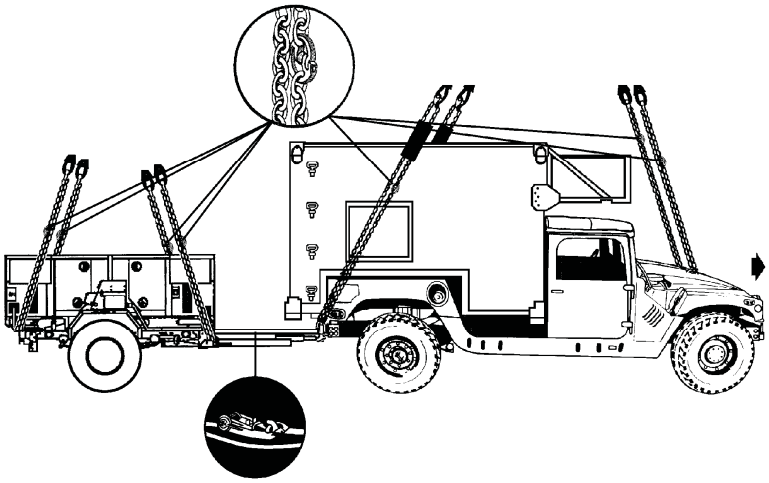

RIGGING STEPS

1. Position apex fitting on the roof of the shelter. Route outer sling legs 1 and 2 to the front of the vehicle and inner sling legs 3 and 4 to the rear. Sling legs 1 and 3 must be on the left side of the load.

2. Loop the chain end of sling leg 1 through the left front lift provision that protrudes through the hood from inboard to outboard. Place the correct link from Table 5-26 in the grab hook. Repeat with sling leg 2 and the right front lift provision. Secure excess chain with tape or Type III nylon cord.

3. Loop the chain end of the sling legs through their respective lift provisions located on the outer ends of the rear bumper. Place the correct link from Table 5-26 in the grab hook. Secure excess chain with tape or Type III nylon cord.

4. Cluster and tie (breakaway technique) all sling legs together on top of the vehicle to prevent entanglement during hookup and lift-off.

Figure 5-26. M1097 (HMMWV) with Meteorological Measuring Set in LMS Shelter and AN/MJQ-35 Power Plant on M116A3 Trailer

RIGGING STEPS (Continued)
5. Position the apex fitting of sling set 2 on top of the generator. Route outer sling legs 1 and 2 to the front of the generator and inner sling legs 3 and 4 to the rear of the generator. Sling legs 1 and 3 must be on the left side of the load. 6. Loop the chain end of sling leg 1 through the left front lift provision located on the front of the trailer. Place the correct link from Table 5-26 in the grab hook. Repeat with sling leg 2 through the right front lift provision. Secure excess chain with tape or Type III nylon cord. 7. Loop the chain end of sling leg 3 through the left rear lift provision. Place the correct link from Table 5-26 in the grab hook. Repeat with sling leg 4 through the right rear lift provision. Secure excess chain with tape or Type III nylon cord. 8. Cluster and tie (breakaway technique) all sling legs together on top of the trailer to prevent entanglement during hookup and lift-off.

Figure 5-26. M1097 (HMMWV) with Meteorological Measuring Set in LMS Shelter and AN/MJQ-35 Power Plant on M116A3 Trailer (Continued)

M1113 (HMMWV) WITH LMS SHELTER AND SHADOW TACTICAL UNMANNED AERIAL VEHICLE (TUAV) LAUNCH RECOVERY TRAILER

5-28. The M1113 with LMS shelter and shadow tactical unmanned aerial vehicle launch recovery trailer are rigged for dual-point sling load using the following procedures:

- **Applicability.** The following items in Table 5-27 are certified for the helicopter(s) listed in the following table by the US Army Natick Soldier Center:

Table 5-27. M1113 with LMS Shelter and Shadow Tactical Unmanned Aerial Vehicle (TUAV) Launch Recovery Trailer

Nomenclature	*Max Weight (Pounds)*	*Sling Set*	*Link Count Front/Rear*	*Type of Aircraft*
Shadow Tactical Unmanned Aerial Vehicle, Air Vehicle Transport	10,320	25K	30/10	CH-47
Shadow Tactical Unmanned Aerial Vehicle, Launch/Recovery Trailer	3,737	25K	40/60	CH-47

- **Materials.** The following materials are required to rig this load:
  - Sling set (25,000-pound capacity) (2 each).
    - Additional chain length, part number 38850-00053-102, from a 25,000-pound capacity sling set (8 each).
    - Additional coupling link, NSN 4010-01-041-9751, from a 25,000-pound sling set (8 each).
  - Tape, adhesive, pressure-sensitive, 2-inch wide roll.
  - Cord, nylon, Type III, 550-pound breaking strength.
  - Webbing, cotton, 1/4-inch, 80-pound breaking strength.
  - Strap, cargo, tiedown, CGU-1/B (2 each).
  - Felt sheet, cattle hair, Type IV, 1/2-inch or suitable substitute.

- **Personnel.** Two persons can prepare and rig the M1113 HMMWV in 15 minutes. Two persons can prepare and rig the trailer set in 20 minutes.
- **Procedures.** Attach the trailer to the truck by placing the lunette on the pintle hook and securing the latch with tape or Type III nylon cord. Secure the safety chains, cables, and hoses. Position the vehicle on level ground so both the truck and trailer are in a straight line. The following procedures apply to this load:
  - **Preparation.** Prepare the load using the following steps:
    - Fold mirrors inward and tie together with Type III nylon cord.
    - Secure all equipment and cargo inside the truck and trailer with tiedown straps, tape, or Type III nylon cord.
    - Secure all loose equipment inside the shelter with tape, Type III nylon cord, or tiedown straps. Close and secure the door.
    - Ensure the fuel tank is not over 3/4 full. Inspect the fuel tank cap, oil filler cap, and battery caps for proper installation.
    - Engage the vehicle parking brake and put the transmission in neutral.
    - Ensure the front wheels are pointed straight ahead. Tie down the steering wheel, using the securing device attached under the dashboard.
    - Deploy the trailer rear landing legs and place in the fully retracted position. Secure the stowage straps with tape or Type III nylon cord.
    - Ensure the rear lift provisions are oriented above the rear landing legs.
    - Retract the lunette leg and secure with Type III nylon cord.
    - Secure all lids, doors, and caps with tape or Type III nylon cord.
    - Secure the beam support segments to the rails with Type III nylon cord.
    - Ensure the shuttle is secured in the stowed position.
    - Ensure the trailer parking brakes are set.
    - Connect the hook portion of a CGU-1/B tiedown strap to the left rear inboard tiedown provision located near the pintle on the rear bumper of the truck. Connect the other side to the underside of the trailer frame.
    - Repeat the above procedure on the right side of the load.
    - Tighten both CGU-1/B tiedown straps at the same time. Secure the excess strap and safety the ratchet handles in the closed position with tape.
    - Connect one additional chain length to each chain on each sling set with a coupling link.

CAUTION

Do not connect the CGU-1/B tiedown strap around the truck's rear axle or wheel, or front lift provisions on the trailer.

  - **Rigging.** Rig the load according to the steps in Figure 5-27.
  - **Hookup.** Two hookup teams are required for this load. The static wand person discharges the static electricity with the static wand. The forward hookup person kneels on the top of the shelter and places apex fitting 1 onto the forward cargo hook. The aft hookup person stands on the trailer and places apex fitting 2 onto the aft cargo hook. The hookup team then carefully dismounts the load and remains close to the load as the helicopter removes slack from the sling legs. When successful hookup is assured, the hookup team quickly exits the area underneath the helicopter to the designated rendezvous point.
  - **Derigging.** Derigging is the reverse of the preparation and rigging procedures.

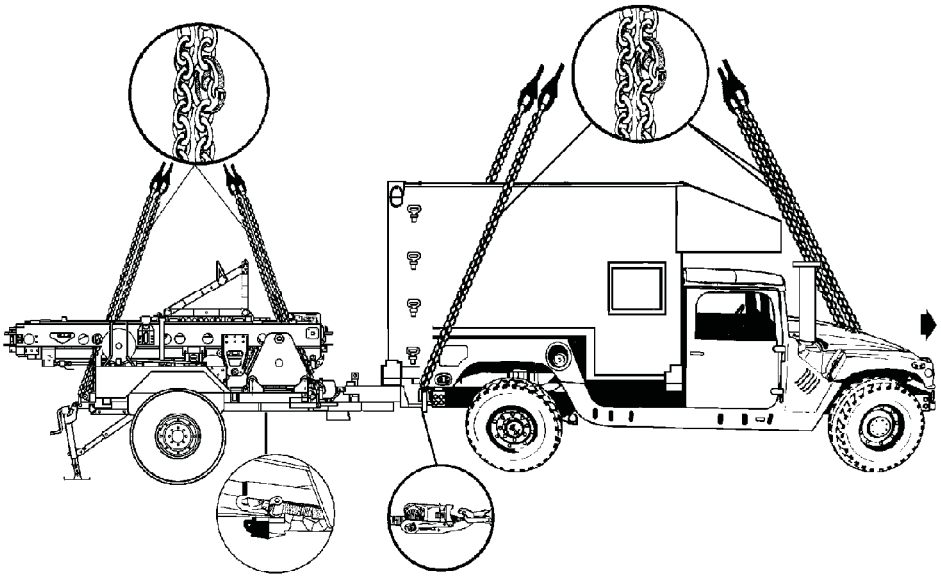

RIGGING STEPS

1. Position apex fitting on the roof of the shelter. Route outer sling legs 1 and 2 to the front of the vehicle and inner sling legs 3 and 4 to the rear. Sling legs 1 and 3 must be on the left side of the load.

2. Loop the chain end of sling leg 1 through the left front lift provision that protrudes through the hood from inboard to outboard. Place the correct link from Table 5-27 in the grab hook. Repeat with sling leg 2 and the right front lift provision. Secure excess chain with tape or Type III nylon cord.

3. Loop the chain end of the sling legs through their respective lift provisions located on the outer ends of the rear bumper. Place the correct link from Table 5-27 in the grab hook. Secure excess chain with tape or Type III nylon cord.

4. Cluster and tie (breakaway technique) all sling legs together on top of the vehicle to prevent entanglement during hookup and lift-off.

5. Position the apex fitting of sling set 2 on top of the trailer. Route outer sling legs 1 and 2 to the front of the trailer and inner sling legs 3 and 4 to the rear of the trailer. Sling legs 1 and 3 must be on the left side of the load.

6. Loop the chain end of sling leg 1 through the left front lift provision located on the front of the trailer. Place the correct link from Table 5-27 in the grab hook. Repeat with sling leg 2 through the right front lift provision. Secure excess chain with tape or Type III nylon cord.

7. Loop the chain end of sling leg 3 through the left rear lift provision. Place the correct link from Table 5-27 in the grab hook. Repeat with sling leg 4 through the right rear lift provision. Secure excess chain with tape or Type III nylon cord.

Figure 5-27. M1113 with LMS Shelter and Shadow Unmanned Aerial Vehicle Launch Recovery Trailer

RIGGING STEPS (Continued)
8. Raise each chain on the trailer until tight and tie the chain to the rail with 1/4-inch cotton webbing. 9. Cluster and tie (breakaway technique) all sling legs together on top of the trailer to prevent entanglement during hookup and lift-off.

Figure 5-27. M1113 with LMS Shelter and Shadow Unmanned Aerial Vehicle Launch Recovery Trailer (Continued)

M998/M1038 1 1/4-TON CARGO TRUCK (HMMWV) AND M102, 105-MM HOWITZER

5-29. The M998/M1038 1 1/4-ton cargo truck and M102, 105-mm howitzer are rigged for dual-point sling load using the following procedures:

- **Applicability.** The following items in Table 5-28 are certified for the helicopter(s) listed in the following table by the US Army Natick Soldier Center:

Table 5-28. M998/M1038 1 1/4-Ton Cargo Truck and M102, 105-mm Howitzer

Nomenclature	*Max Weight (Pounds)*	*Sling Set*	*Link Count Front/Rear*	*Type of Aircraft*
Truck, Cargo, 1 ¼-Ton, M998/M1038 without Accompanying Load	7,700	10K	36/8	CH-47
Truck, Cargo, 1 ¼-Ton, M998/M1038 with Accompanying Load	7,700	10K	40/8	CH-47
Howitzer, M102, without Accompanying Load	3,330	10K	83/9	CH-47
Howitzer, M102, with Accompanying Load	3,330	10K	58/6	CH-47
Accompanying Load	2,860	5K or 10K Net	N/A	CH-47
Truck, Cargo, 1 ¼-Ton, 1097A1 and M102 Howitzer without Accompanying Load	HMMWV-7,840 M102-3,330	10K 10K	40/10 80/10	CH-47

- **Materials.** The following materials are required to rig this load:
  - Sling set (10,000-pound capacity) (2 each).
  - Tape, adhesive, pressure-sensitive, 2-inch wide roll.
  - Cord, nylon, Type III, 550-pound breaking strength.
  - Webbing, cotton, 1/4-inch, 80-pound breaking strength.
  - Strap, cargo, tiedown, CGU-1/B (2 each).
  - Felt sheet, cattle hair, Type IV, 1/2-inch or suitable substitute.
  - Clevis assembly, Type V platform, NSN 1670-01-162-2372, (2 each, 5 each if using a 25,000-pound capacity sling set). Three medium clevis assemblies may be substituted for the three Type V platform clevises used on the howitzer when using 25,000-pound capacity sling sets.
  - 5,000- or 10,000-pound capacity net (used for accompanying load).
  - Clevis assembly, large, or apex fitting (10,000-pound capacity).
- **Personnel.** Two persons can prepare and rig the M998/M1038 HMMWV in 15 minutes. Two persons can prepare and rig the howitzer in 10 minutes.
- **Procedures.** Attach the howitzer to the truck by placing the lunette on the pintle hook and securing the latch with tape or Type III nylon cord. Secure the safety chains. Position the

vehicle on level ground so both the truck and howitzer are in a straight line. The following procedures apply to this load:

- **Preparation.** Prepare the load using the following steps:
  - Fold mirrors inward and tie together with Type III nylon cord. Remove the doors and secure to the seats with Type III nylon cord.
  - Secure all equipment and cargo inside the truck with tiedown straps, tape, or Type III nylon cord.
  - Ensure the fuel tank is not over 3/4 full. Inspect the fuel tank cap, oil filler cap, and battery caps for proper installation.
  - Engage the vehicle parking brake and put the transmission in neutral.
  - Ensure the front wheels are pointed straight ahead. Tie down the steering wheel, using the securing device attached under the dashboard.
  - Secure the brake light cable to the howitzer trail with tape or Type III nylon cord.
  - Secure the cover over the howitzer sights.
  - Place the section equipment chest on the end of the trails and secure with tiedown straps.
  - Engage the howitzer hand brake.
  - Position a Type V platform clevis assembly in the tiedown provision located on the outboard side of the truck frame above the left rear wheel. Ensure the bolt end of the clevis is facing toward the howitzer. Route the free end of one tiedown strap under the howitzer left trail, up over the trail box cross member support, through the Type V platform clevis, and connect it to the hook on the ratchet.
  - Repeat the above procedure on the right side of the load.
  - Position padding between the strap and the angled bracket (gusset) located forward of the rear lift provision on the truck.
  - Tighten both CGU-1/B tiedown straps at the same time. Secure the excess strap and safety the ratchet handles in the closed position with tape.

CAUTION

Do not attach the tiedown straps to the rear wheels. The wheels may rotate in flight and the straps may become loose.

  - Prepare and rig the cargo net, if used, in accordance with FM 4-20.197. Position the cargo net close enough to the howitzer so the lifting legs and apex fitting can be routed under the howitzer trails. Connect the large clevis or 10,000-pound capacity apex fitting to the cargo net apex fitting.
- **Rigging.** Rig the load according to the steps in Figure 5-28.
- **Hookup.** Two hookup teams are required for this load. The static wand person discharges the static electricity with the static wand. The forward hookup person stands in the bed of the vehicle and places apex fitting 1 onto the forward cargo hook. The aft hookup person stands on the trails of the howitzer and places apex fitting 2 onto the aft cargo hook. The hookup team then carefully dismounts the load and remains close to the load as the helicopter removes slack from the sling legs. When successful hookup is assured, the hookup team quickly exits the area underneath the helicopter to the designated rendezvous point.

Note. Advise the aircraft commander to release the sling set apex fitting on the side of the howitzer away from the gun sights to prevent damage.

- **Derigging**. Derigging is the reverse of the preparation and rigging procedures.

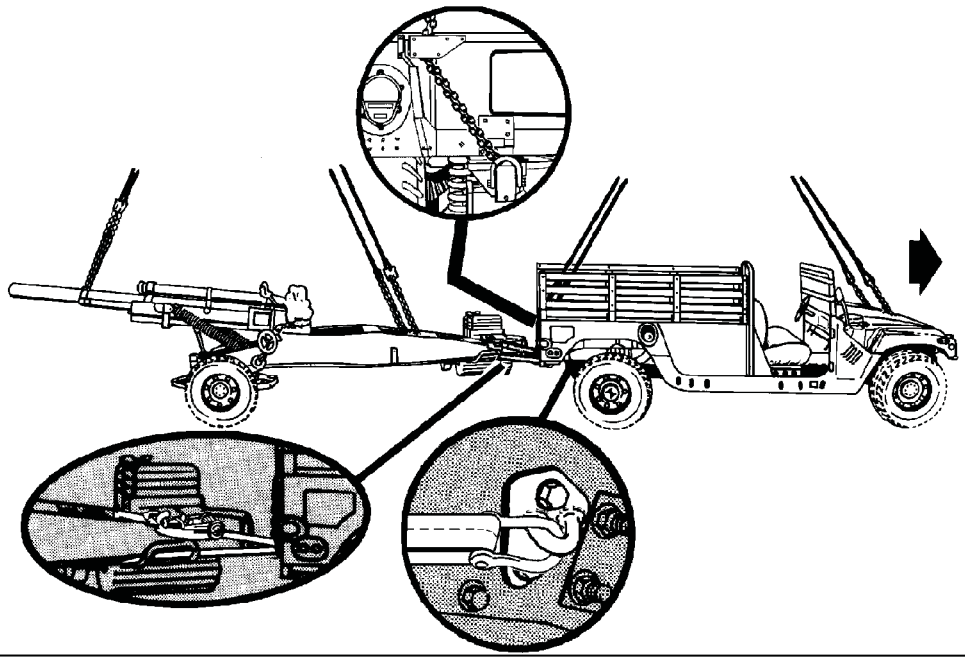

RIGGING STEPS

Note. If a 25,000-pound capacity sling set is used to rig the howitzer, attach a Type V platform clevis to each lift provision on the howitzer. Position the bell portion of the clevis on the lift provision pin.

1. Position apex fitting on top of the truck bed. Route outer sling legs 1 and 2 to the front of the vehicle and inner sling legs 3 and 4 to the rear. Sling legs 1 and 3 must be on the left side of the load.

2. Loop the chain end of sling leg 1 through the left front lift provision that protrudes through the hood of the vehicle. Place the correct link from Table 5-28 in the grab hook. Repeat with sling leg 2 and the right front lift provision. Secure excess chain with tape or Type III nylon cord.

3. Route the chain end of sling leg 3 through the eyelet opening in the upper left corner of the tailgate. Loop the chain end through the left lift provision on the bumper and thread back through the eyelet opening in the tailgate. Place the correct link from Table 5-28 in the grab hook. Repeat with sling leg 4 and the right rear lift provision.

Figure 5-28. M998/M1038 Cargo Truck and M102, 105-mm Howitzer

RIGGING STEPS (Continued)
4. Cluster and tie (breakaway technique) all sling legs together on top of the vehicle to prevent entanglement during hookup and lift-off. 5. Position the apex fitting of sling set 2 on top of the breech. Route outer sling legs 1 and 2 to the trails and inner sling legs 3 and 4 to the barrel. Sling legs 1 and 3 must be on the left side of the load. 6. Loop the chain end of sling leg 1 through the lift provision located on the left trail. If an accompanying load is carried, loop the chain end through the lift provision, through the large clevis or apex fitting connected to the accompanying load. Place the correct link from Table 5-28 in the grab hook. Repeat with sling leg 2 through the lift provision on the right trail. Secure excess chain with tape or Type III nylon cord. 7. Loop the chain end of sling legs 3 and 4 through the lift provision located on the howitzer barrel. Place the correct link from Table 5-28in the grab hook. Secure excess chain with tape or Type III nylon cord. 8. Cluster and tie (breakaway technique) all sling legs together on top of the trailer to prevent entanglement during hookup and lift-off.

Figure 5-28. M998/M1038 Cargo Truck and M102, 105-mm Howitzer (Continued)

M1037/M1097 TRUCK, UTILITY, 1 1/4-TON (HMMWV) AND M119, 105-MM HOWITZER

5-30. The M1037/M1097 truck, utility, 1 1/4-ton and M119, 105-mm howitzer are rigged for dual-point sling load using the following procedures:

- **Applicability.** The following items in Table 5-29 are certified for the helicopter(s) listed in the following table by the US Army Natick Soldier Center:

Table 5-29. M1037/M1097 Truck, Utility, 1 1/4-Ton and M119, 105-mm Howitzer

Nomenclature	*Max Weight (Pounds)*	*Sling Set*	*Link Count Front/Rear*	*Type of Aircraft*
Truck, Cargo, 1 ¼-Ton, M1037/M1097	7,320	10K	80/3	CH-47
Howitzer, 105-mm, M119, (M1037 as Prime Mover)	4,160	10K	Leg 1- 28 Leg 2-30 Leg 3-20	CH-47
Howitzer, 105-mm, M119, (M1097 as Prime Mover)	4,160	10K	Leg 1- 55 Leg 2-40 Leg 3-30	CH-47

- **Materials.** The following materials are required to rig this load:
  - Sling set (10,000-pound capacity) (2 each).
  - Tape, adhesive, pressure-sensitive, 2-inch wide roll.
  - Cord, nylon, Type III, 550-pound breaking strength.
  - Webbing, cotton, 1/4-inch, 80-pound breaking strength.
  - Strap, cargo, tiedown, CGU-1/B (4 each).
  - Felt sheet, cattle hair, Type IV, 1/2-inch or suitable substitute.
  - Clevis assembly, Type V platform, NSN 1670-01-162-2372, (2 each).
  - Webbing, nylon, tubular, 1/2-inch, 1,000-pound breaking strength.

- **Personnel.** Two persons can prepare and rig the M1037/M1097 HMMWV in 15 minutes. Two persons can prepare and rig the howitzer in 10 minutes.
- **Procedures.** Attach the howitzer to the truck by placing the lunette on the pintle hook and securing the latch with tape or Type III nylon cord. Secure the safety chains. Position the vehicle on level ground so both the truck and howitzer are in a straight line. The following procedures apply to this load:
  - **Preparation.** Prepare the load using the following steps:
    - Fold mirrors inward and tie together with Type III nylon cord. Remove the doors and secure to the seats with Type III nylon cord.
    - Secure all equipment and cargo inside the truck with tiedown straps, tape, or Type III nylon cord.
    - Ensure the fuel tank is not over 3/4 full. Inspect the fuel tank cap, oil filler cap, and battery caps for proper installation.
    - Engage the vehicle parking brake and put the transmission in neutral.
    - Ensure the front wheels are pointed straight ahead. Tie down the steering wheel, using the securing device attached under the dashboard.
    - Place the howitzer in the folded-towed position. Ensure the knock-off hub is in the horizontal position. Engage the right wheel parking brake (wheel with knock-off hub) only.
    - Ensure the lunette is in the extended position. Install the towing eye stop (C-clamp) on the lunette and secure in position with its retaining pin.
    - Secure the brake light cable to the trails with tape or Type III nylon cord.
    - Secure the sight cover to the dial sight with tape or Type III nylon.
    - Secure the firing platform, hand spike, and jack to the trail assembly with Type III nylon cord.
    - If the detachable field spade is attached to the permanent spades, ensure the two locking pins are installed and locked in place. Route and tie a length of Type III nylon cord through the key ring of the safety cable and around the other end of the locking pin.
    - Position a Type V platform clevis assembly in the tiedown provision located on the outboard side of the truck frame above the left rear wheel. Ensure the bolt end of the clevis is facing toward the howitzer. Route the free end of one tiedown strap under the howitzer left trail, through the Type V platform clevis, and connect it to the hook on the ratchet.
    - Route a second strap under and around the trail tube, aft (closer to the gun wheel hub), of the triangular brace on the M119 trails, through the Type V platform clevis, and connect it to the hook on the ratchet.
    - Repeat the procedures in the previous two steps on the right side of the load.
    - Position padding between the strap and the angled bracket (gusset) located forward of the rear lift provision on the truck.
    - Tighten all CGU-1/B tiedown straps at the same time. Secure the excess strap and safety the ratchet handles in the closed position with tape.

CAUTION

Do not attach the tiedown straps to the rear wheels. The wheels may rotate in flight and the straps may become loose.

  - **Rigging.** Rig the load according to the steps in Figure 5-29.
  - **Hookup.** Two hookup teams are required for this load. The static wand person discharges the static electricity with the static wand. The forward hookup person stands in the bed of the

vehicle and places apex fitting 1 onto the forward cargo hook. The aft hookup person stands on the firing platform of the howitzer and places apex fitting 2 onto the aft cargo hook. The hookup team then carefully dismounts the load and remains close to the load as the helicopter removes slack from the sling legs. When successful hookup is assured, the hookup team quickly exits the area underneath the helicopter to the designated rendezvous point.

Note. Advise the aircraft commander to release the sling set apex fitting on the side of the howitzer away from the gun sights to prevent damage.

- **Derigging.** Derigging is the reverse of the preparation and rigging procedures.

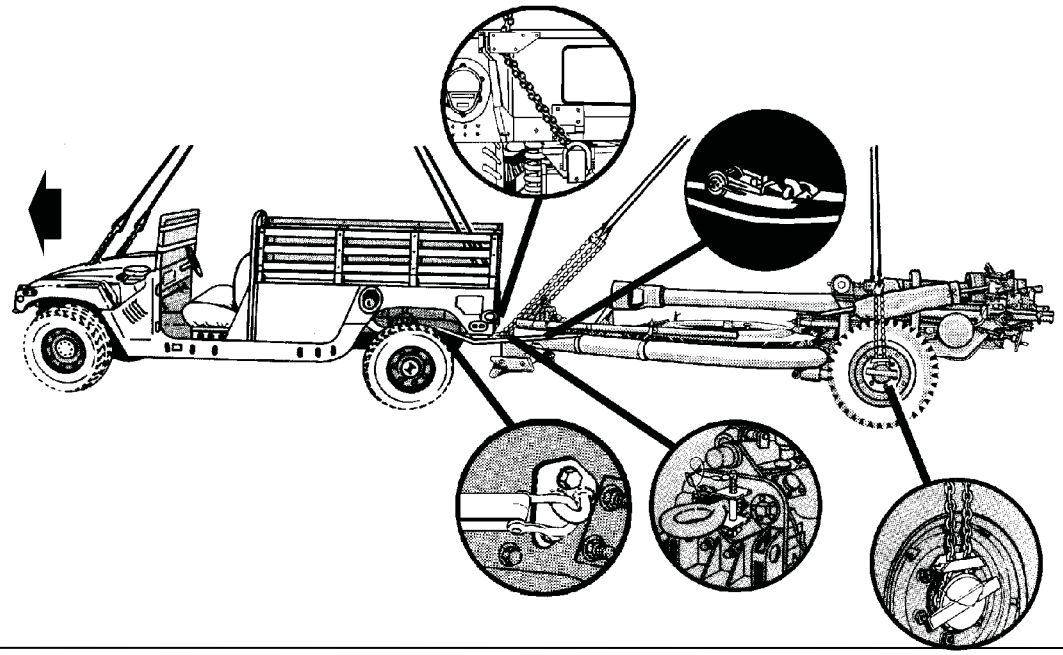

RIGGING STEPS

Note. The sling set on the howitzer may use 3 or 4 sling legs. If the fourth sling leg is used, it will be attached to the lunette with the same link count as sling leg 3. Tape or tie sling legs 3 and 4 together at 2-3 foot intervals over the entire length of the sling legs.

1. Position apex fitting on top of the truck bed. Route outer sling legs 1 and 2 to the front of the vehicle and inner sling legs 3 and 4 to the rear. Sling legs 1 and 3 must be on the left side of the load.

2. Loop the chain end of sling leg 1 through the left front lift provision that protrudes through the hood of the vehicle. Place the correct link from Table 5-29 in the grab hook. Repeat with sling leg 2 and the right front lift provision. Secure excess chain with tape or Type III nylon cord.

Figure 5-29. M1037/M1097 Truck, Utility, 1 1/4-Ton and M119, 105-mm Howitzer

RIGGING STEPS (Continued)

3. Route the chain end of sling leg 3 through the eyelet opening in the upper left corner of the tailgate. Loop the chain end through the left lift provision on the bumper and thread back through the eyelet opening in the tailgate. Place the correct link from Table 5-29 in the grab link. Repeat with sling leg 4 and the right rear lift provision.

4. Cluster and tie (breakaway technique) all sling legs together on top of the vehicle to prevent entanglement during hookup and lift-off.

5. Position the apex fitting of sling set 2 on top of the barrel over the firing platform. Route outer sling legs 1 and 2 to the wheel hubs and inner sling leg 3 to the lunette. Sling leg 1 must be on the left wheel hub.

6. Loop the chain end of sling leg 1 around the left wheel hub. Pull the sling leg taut to remove the slack from the chain. Install the sling set safety clamp on the chain links as close to the hub as possible. If the clamp is not available, tie the chain links together with 1/2- inch tubular nylon. Place the correct link from Table 5-29 in the grab hook. Repeat with sling leg 2 through the lift provision on the right trail. Secure excess chain with tape or Type III nylon cord.

7. Loop the chain end of sling leg 3 through the lunette. Place the correct link from Table 5-29 in the grab hook. Secure excess chain with tape or Type III nylon cord.

8. Cluster and tie (breakaway technique) all sling legs together on top of the trailer to prevent entanglement during hookup and lift-off.

Figure 5-29. M1037/M1097 Truck, Utility, 1 1/4-Ton and M119, 105-mm Howitzer (Continued)

M1025A2 TRUCK, 1 1/4-TON (HMMWV) WITH LINE OF SIGHT ANTI-TANK (LOSAT) RELOADER CRANE AND HIGH MOBILITY RESUPPLY TRAILER (HMT)

5-31. The M1025A2 truck, 1 1/4-ton with line of sight anti-tank reloader crane and high mobility resupply trailer are rigged for dual-point sling load using the following procedures:

- **Applicability.** The following items in Table 5-30 are certified for the helicopter(s) listed in the following table by the US Army Natick Soldier Center:

Table 5-30. M1025A2 Truck, 1 1/4-Ton with Line of Sight Anti-Tank Reloader Crane and High Mobility Resupply Trailer

Nomenclature	*Max Weight (Pounds)*	*Sling Set*	*Link Count Front/Rear*	*Type of Aircraft*
Truck, Cargo, 1 ¼-Ton, M1025A2 with LOSAT Reloader Crane	8,240	10K	65/35	CH-47
LOSAT Resupply Trailer (HMT) with 8 Missiles	4,100	10K	72//87	CH-47

- **Materials.** The following materials are required to rig this load:
  - Sling set (10,000-pound capacity) (2 each).
  - Tape, adhesive, pressure-sensitive, 2-inch wide roll.
  - Cord, nylon, Type III, 550-pound breaking strength.
  - Webbing, cotton, 1/4-inch, 80-pound breaking strength.

- Strap, cargo, tiedown, CGU-1/B (4 each).
- Felt sheet, cattle hair, Type IV, 1/2-inch or suitable substitute.

- **Personnel.** Two persons can prepare and rig the truck in 10 minutes. Two persons can prepare and rig the trailer in 20 minutes.
- **Procedures.** Attach the trailer to the truck by placing the lunette on the pintle hook and securing the latch with tape or Type III nylon cord. Secure the safety chains. Position the vehicle on level ground so both the truck and trailer are in a straight line. The following procedures apply to this load:
  - **Preparation.** Prepare the load using the following steps:
    - Fold mirrors inward and tie together with Type III nylon cord. Remove the doors and secure to the seats with Type III nylon cord.
    - Secure all equipment and cargo inside the truck with tiedown straps, tape, or Type III nylon cord.
    - Ensure the fuel tank is not over 3/4 full. Inspect the fuel tank cap, oil filler cap, and battery caps for proper installation.
    - Engage the vehicle parking brake and put the transmission in neutral.
    - Ensure the front wheels are pointed straight ahead. Tie down the steering wheel, using the securing device attached under the dashboard.
    - Retract the lunette leg and secure with Type III nylon cord.
    - Secure all doors with tiedown straps or Type III nylon cord.
    - Ensure the trailer parking brakes are set.
    - Route the hook portion of a CGU-1/B tiedown strap through the left rear inboard tiedown provision located near the pintle on the rear bumper of the truck and through the mounting bracket on the front of the trailer A-frame. Connect the hook to the ratchet of the CGU-1/B.
    - Repeat the above procedure on the right side of the load.
    - Tighten both CGU-1/B tiedown straps at the same time. Secure the excess strap and safety the ratchet handles in the closed position with tape.

CAUTION

Do not connect the CGU-1/B tiedown strap around the truck's rear axle or wheel.

- **Rigging.** Rig the load according to the steps in Figure 5-30.
- **Hookup.** Two hookup teams are required for this load. The static wand person discharges the static electricity with the static wand. The forward hookup person stands on top of the vehicle and places apex fitting 1 onto the forward cargo hook. The aft hookup person stands on the trailer fender and places apex fitting 2 onto the aft cargo hook. The hookup team then carefully dismounts the load and remains close to the load as the helicopter removes slack from the sling legs. When successful hookup is assured, the hookup team quickly exits the area underneath the helicopter to the designated rendezvous point.
- **Derigging.** Derigging is the reverse of the preparation and rigging procedures.

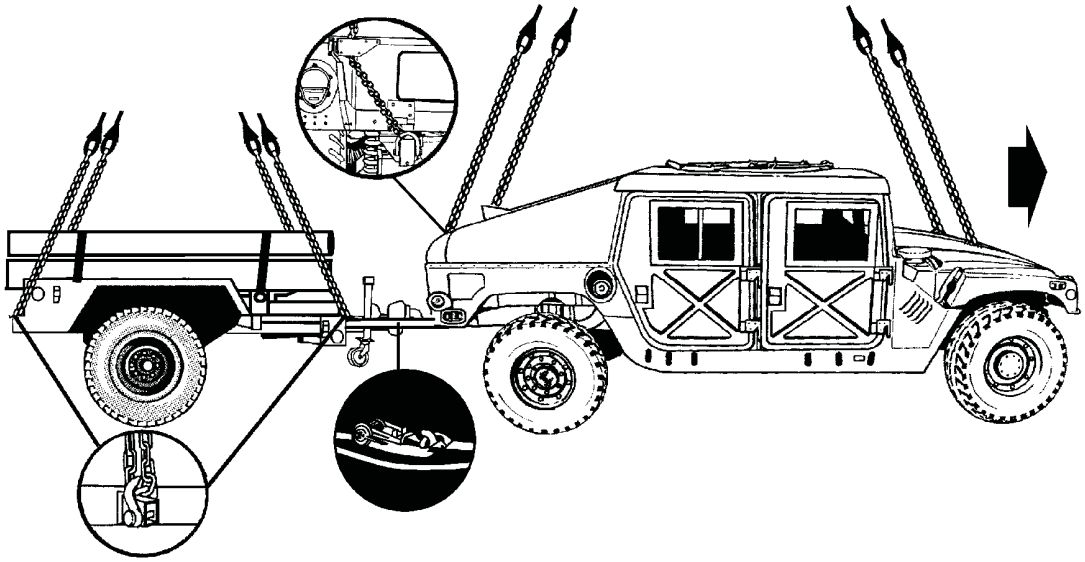

RIGGING STEPS

1. Position apex fitting on top of the truck. Route outer sling legs 1 and 2 to the front of the vehicle and inner sling legs 3 and 4 to the rear. Sling legs 1 and 3 must be on the left side of the load.

2. Loop the chain end of sling leg 1 through the left front lift provision that protrudes through the hood of the vehicle. Place the correct link from Table 5-30 in the grab hook. Repeat with sling leg 2 and the right front lift provision. Secure excess chain with tape or Type III nylon cord.

3. Route the chain end of sling leg 3 through the eyelet opening in the upper left corner of the tailgate. Loop the chain end through the left lift provision on the bumper and thread back through the eyelet opening in the tailgate. Place the correct link from Table 5-30 in the grab link. Repeat with sling leg 4 and the right rear lift provision.

4. Cluster and tie (breakaway technique) all sling legs together on top of the vehicle to prevent entanglement during hookup and lift-off.

5. Position the apex fitting of sling set 2 on top of the trailer. Route outer sling legs 1 and 2 to the front of the trailer and inner sling legs 3 and 4 to the rear of the trailer. Sling legs 1 and 3 must be on the left side of the load.

6. Loop the chain end of sling leg 1 through the left front lift provision located on the front of the trailer. Place the correct link from Table 5-30 in the grab hook. Repeat with sling leg 2 through the right front lift provision. Secure excess chain with tape or Type III nylon cord.

7. Loop the chain end of sling leg 3 through the left rear lift provision. Place the correct link from Table 5-30 in the grab hook. Repeat with sling leg 4 through the right rear lift provision. Secure excess chain with tape or Type III nylon cord.

8. Cluster and tie (breakaway technique) all sling legs together on top of the vehicle to prevent entanglement during hookup and lift-off.

Figure 5-30. 1025A2 Truck, 1 1/4-Ton with Line of Sight Anti-Tank Reloader Crane and High Mobility Resupply Trailer

M1113 TRUCK, 1 1/4-TON (HMMWV) WITH LINE OF SIGHT ANTI-TANK (LOSAT) FIRE UNIT AND HIGH MOBILITY RESUPPLY TRAILER (HMT)

5-32. The M1113 truck, 1 1/4-ton with line of sight anti-tank fire unit and high mobility resupply trailer are rigged for dual-point sling load using the following procedures:

- **Applicability.** The following items in Table 5-31 are certified for the helicopter(s) listed in the following table by the US Army Natick Soldier Center:

Table 5-31. M1113 Truck, 1 1/4-Ton with Line of Sight Anti-Tank Fire Unit and High Mobility Resupply Trailer

Nomenclature	*Max Weight (Pounds)*	*Sling Set*	*Link Count Front/Rear*	*Type of Aircraft*
Truck, Cargo, 1 ¼-Ton, M1113 with LOSAT Fire Unit	10,920	25K	30/5	CH-47
LOSAT Resupply Trailer (HMT) with 8 Missiles	4,100	10K	65/50	CH-47

- **Materials.** The following materials are required to rig this load:
  - Sling set (10,000-pound capacity).
  - Sling set (25,000-pound capacity).
    - Additional chain length, part number 38850-00053-102, from a 25,000-pound capacity sling set (4 each).
    - Additional coupling link, NSN 4010-01-041-9751, from a 25,000-pound sling set (4 each).
  - Tape, adhesive, pressure-sensitive, 2-inch wide roll.
  - Cord, nylon, Type III, 550-pound breaking strength.
  - Webbing, cotton, 1/4-inch, 80-pound breaking strength.
  - Strap, cargo, tiedown, CGU-1/B (4 each).
  - Felt sheet, cattle hair, Type IV, 1/2-inch or suitable substitute.
- **Personnel.** Two persons can prepare and rig the truck in 10 minutes. Two persons can prepare and rig the trailer in 20 minutes.
- **Procedures.** Attach the trailer to the truck by placing the lunette on the pintle hook and securing the latch with tape or Type III nylon cord. Secure the safety chains. Position the vehicle on level ground so both the truck and trailer are in a straight line. The following procedures apply to this load:
  - **Preparation.** Prepare the load using the following steps:
    - Fold mirrors inward and tie together with Type III nylon cord. Remove the doors and secure to the seats with Type III nylon cord.
    - Secure all equipment and cargo inside the truck with tiedown straps, tape, or Type III nylon cord.
    - Ensure the fuel tank is not over 3/4 full. Inspect the fuel tank cap, oil filler cap, and battery caps for proper installation.
    - Engage the vehicle parking brake and put the transmission in neutral.
    - Ensure the front wheels are pointed straight ahead. Tie down the steering wheel, using the securing device attached under the dashboard.
    - Retract the lunette leg and secure with Type III nylon cord.
    - Secure all doors with tiedown straps or Type III nylon cord.
    - Ensure the trailer parking brakes are set.
    - Route the hook portion of a CGU-1/B tiedown strap through the left rear inboard tiedown provision located near the pintle on the rear bumper of the truck and through

the mounting bracket on the front of the trailer A-frame. Connect the hook to the ratchet of the CGU-1/B.

- Repeat the above procedure on the right side of the load.
- Tighten both CGU-1/B tiedown straps at the same time. Secure the excess strap and safety the ratchet handles in the closed position with tape.
- Connect one additional chain length to each chain on each sling set with a coupling link.

CAUTION

Do not connect the CGU-1/B tiedown strap around the truck's rear axle or wheel.

- **Rigging.** Rig the load according to the steps in Figure 5-31.
- **Hookup.** Two hookup teams are required for this load. The static wand person discharges the static electricity with the static wand. The forward hookup person stands on top of the vehicle and places apex fitting 1 onto the forward cargo hook. The aft hookup person stands on the trailer fender and places apex fitting 2 onto the aft cargo hook. The hookup team then carefully dismounts the load and remains close to the load as the helicopter removes slack from the sling legs. When successful hookup is assured, the hookup team quickly exits the area underneath the helicopter to the designated rendezvous point.
- **Derigging.** Derigging is the reverse of the preparation and rigging procedures.

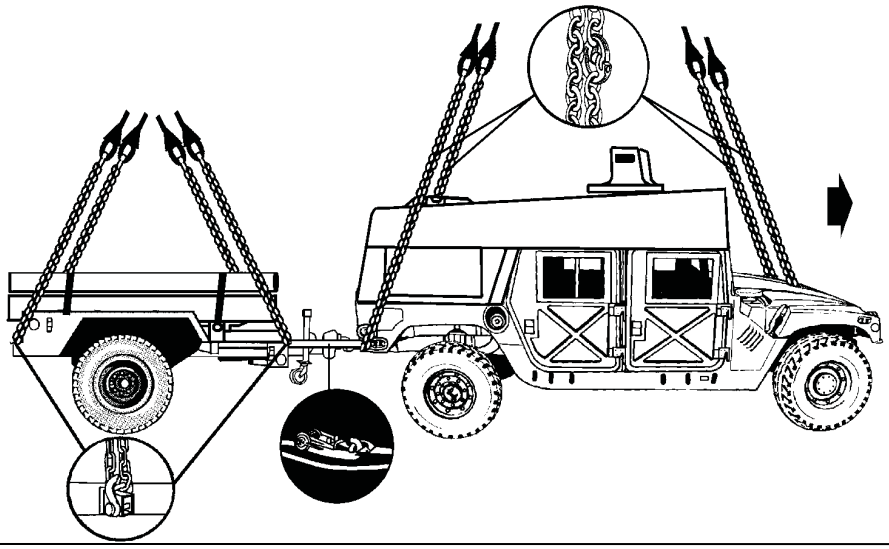

RIGGING STEPS

1. Position the 25,000-pound capacity sling set on top of the truck. Route outer sling legs 1 and 2 to the front of the vehicle and inner sling legs 3 and 4 to the rear. Sling legs 1 and 3 must be on the left side of the load.

Figure 5-31. M1113 Truck, 1 1/4-Ton with Line Of Sight Anti-Tank Fire Unit and High Mobility Resupply Trailer

RIGGING STEPS (Continued)
2. Loop the chain end of sling leg 1 through the left front lift provision that protrudes through the hood of the vehicle. Place the correct link from Table 5-31 in the grab hook. Repeat with sling leg 2 and the right front lift provision. Secure excess chain with tape or Type III nylon cord. 3. Route the chain end of sling leg 3 through the eyelet opening in the upper left corner of the tailgate. Loop the chain end through the left lift provision on the bumper and thread back through the eyelet opening in the tailgate. Place the correct link from Table 5-31 in the grab link. Repeat with sling leg 4 and the right rear lift provision. 4. Cluster and tie (breakaway technique) all sling legs together on top of the vehicle to prevent entanglement during hookup and lift-off. 5. Position the 10,000-pound capacity sling set 2 on top of the trailer. Route outer sling legs 1 and 2 to the front of the trailer and inner sling legs 3 and 4 to the rear of the trailer. Sling legs 1 and 3 must be on the left side of the load. 6. Loop the chain end of sling leg 1 through the left front lift provision located on the front of the trailer. Place the correct link from Table 5-31 in the grab hook. Repeat with sling leg 2 through the right front lift provision. Secure excess chain with tape or Type III nylon cord. 7. Loop the chain end of sling leg 3 through the left rear lift provision. Place the correct link from Table 5-31 in the grab hook. Repeat with sling leg 4 through the right rear lift provision. Secure excess chain with tape or Type III nylon cord. 8. Cluster and tie (breakaway technique) all sling legs together on top of the vehicle to prevent entanglement during hookup and lift-off.

Figure 5-31. M1113 Truck, 1 1/4-Ton with Line of Sight Anti-Tank Fire Unit and High Mobility Resupply Trailer (Continued)

M1113 TRUCK, 1 1/4-TON (HMMWV) WITH M56 SMOKE GENERATOR AND M101A2 TRAILER

5-33. The M1113 truck, 1 1/4-ton with M56 smoke generator and M101A2 trailer are rigged for dual-point sling load using the following procedures:

- **Applicability.** The following items in Table 5-32 are certified for the helicopter(s) listed in the following table by the US Army Natick Soldier Center:

Table 5-32. M1113 Truck, 1 1/4-Ton with M56 Smoke Generator and M101A2 Trailer

Nomenclature	*Max Weight (Pounds)*	*Sling Set*	*Link Count Front/Rear*	*Type of Aircraft*
M1113 with M56 Smoke Generator without Graphite in Tank	9,400	10K	65/3-Left 65/14-Right	CH-47
M101A2 Trailer	3,000	10K	50/40	CH-47

- **Materials.** The following materials are required to rig this load:
  - Sling set (10,000-pound capacity) (2 each).
    - Additional chain length, part number 38850-00053-101, from a 10,000-pound capacity sling set (8 each).
    - Additional coupling link, part number 664228, from a 10,000-pound sling set (8 each).

- Tape, adhesive, pressure-sensitive, 2-inch wide roll.
- Cord, nylon, Type III, 550-pound breaking strength.
- Webbing, cotton, 1/4-inch, 80-pound breaking strength.
- Strap, cargo, tie-down, CGU-1/B (2 each, or more as required to secure cargo).
- Spreader bar assembly NSN: 4910-01-313-8839.

- **Personnel.** Two persons can prepare and rig the truck in 10 minutes. Two persons can prepare and rig the trailer in 10 minutes.
- **Procedures.** Attach the trailer to the truck by placing the lunette on the pintle hook and securing the latch with tape or Type III nylon cord. Secure the safety chains. Position the vehicle on level ground so both the truck and trailer are in a straight line. The following procedures apply to this load:
  - **Preparation.** Prepare the load using the following steps:
    - Fold mirrors inward and tie together with Type III nylon cord. Remove the doors and secure to the seats with Type III nylon cord.
    - Secure all equipment and cargo inside the truck with tiedown straps, tape, or Type III nylon cord.
    - Ensure the fuel tank is not over 3/4 full. Inspect the fuel tank cap, oil filler cap, and battery caps for proper installation.
    - Engage the vehicle parking brake and put the transmission in neutral.
    - Ensure the front wheels are pointed straight ahead. Tie down the steering wheel, using the securing device attached under the dashboard.
    - Ensure the turbine fuel and both fog oil tanks are not over ¾ full.
    - Set the three way valve to the off position.
    - Ensure the IR hopper latches are securely closed and the auxiliary hoses are attached to the mounting bracket at the forward end of the inboard fog oil tank.
    - Secure all latches and doors with tape or Type III nylon cord.
    - Ensure the graphite tank is empty.
    - Extend the spreader bar until the holes line up. Install the pin and engage the keeper.
    - Position the spreader bar across the rear of the vehicle between the rear slings.
    - Ensure the tongue wheel of the trailer is in the up and locked position and the parking brake is set.
    - Tie or tape the light cable to the top of the tongue.
    - Ensure the accompanying load in the trailer is secured with tiedown straps.
    - Route the hook portion of a CGU-1/B tiedown strap through the left rear inboard tiedown provision located near the pintle on the rear bumper of the truck and through the left front lift provision on the trailer. Connect the hook to the ratchet of the CGU-1/B.
    - Repeat the above procedure on the right side of the load.
    - Tighten both CGU-1/B tiedown straps at the same time. Secure the excess strap and safety the ratchet handles in the closed position with tape. Tape tiedown straps every 24 inches to prevent flapping during flight.
    - Connect one additional chain length to each chain on each sling set with a coupling link.

CAUTION

Do not connect the CGU-1/B tiedown strap around the truck's rear axle or wheel.

  - **Rigging.** Rig the load according to the steps in Figure 5-32.
  - **Hookup.** Two hookup teams are required for this load. The static wand person discharges the static electricity with the static wand. The forward hookup person stands on top of the vehicle and places apex fitting 1 onto the forward cargo hook. The aft hookup person stands on the trailer fender and places apex fitting 2 onto the aft cargo hook. The hookup team then

carefully dismounts the load and remains close to the load as the helicopter removes slack from the sling legs. When successful hookup is assured, the hookup team quickly exits the area underneath the helicopter to the designated rendezvous point.

- **Derigging.** Derigging is the reverse of the preparation and rigging procedures.

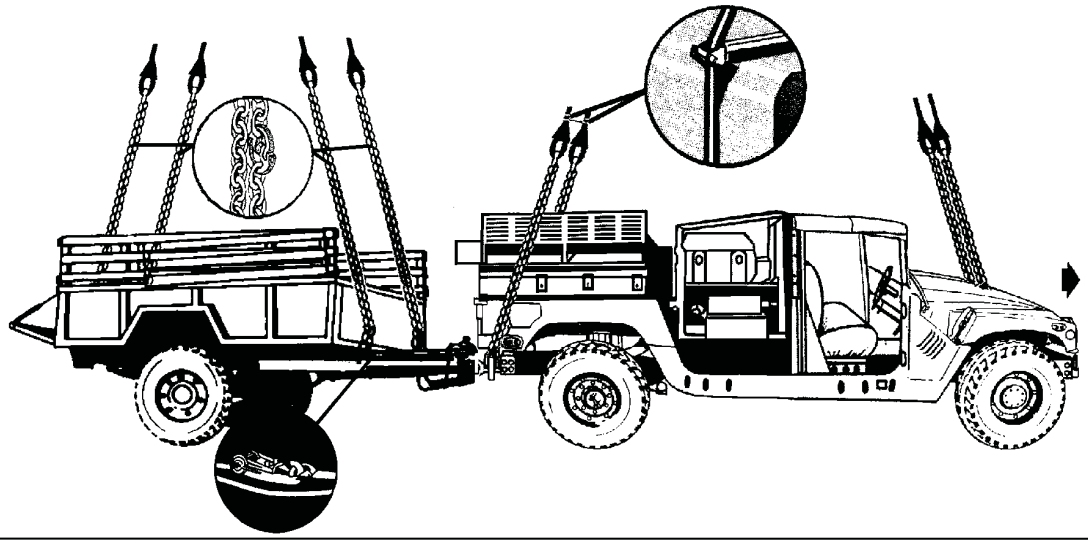

RIGGING STEPS

1. Position the apex fitting on top of the IR hopper or on the forward end of the fog oil tanks. Route outer sling legs 1 and 2 to the front of the vehicle and inner sling legs 3 and 4 to the rear. Sling legs 1 and 3 must be on the left side of the load.

2. Loop the chain end of sling leg 1 through the left front lift provision that protrudes through the hood from inboard to outboard. Place the correct link from Table 5-32 in the grab hook. Repeat with sling leg 2 and the right front lift provision. Secure excess chain with tape or Type III nylon cord.

3. Place the nylon rope of sling legs 3 and 4 in the guides on the ends of the spreader bar. Route the chain end of sling leg 3 through the lift provision located on the left end of the rear bumper from inboard to outboard. Place the correct link from Table 5-32 in the grab hook. Repeat with sling leg 4 and the right rear lift provision.

4. Pad the sling legs in the area where they make contact with the structure.

5. Cluster and tie (breakaway technique) all sling legs together on top of the shelter to prevent entanglement during hookup and lift-off. Position the apex fitting of sling set 2 on top of the trailer. Route outer sling legs 1 and 2 to the front of the trailer and inner sling legs 3 and 4 to the rear of the trailer. Sling legs 1 and 3 must be on the left side of the load.

Figure 5-32. M1113 Truck, 1 1/4-Ton with M56 Smoke Generator and M101A2 Trailer

RIGGING STEPS (Continued)
6. Loop the chain end of sling leg 1 through the left front lift provision located on the front of the trailer. Place the correct link from Table 5-32 in the grab hook. Repeat with sling leg 2 through the right front lift provision. Secure excess chain with tape or Type III nylon cord. 7. Loop the chain end of sling leg 3 through the left rear lift provision. Place the correct link from Table 5-32 in the grab hook. Repeat with sling leg 4 through the right rear lift provision. Secure excess chain with tape or Type III nylon cord. 8. Cluster and tie (breakaway technique) all sling legs together on top of the vehicle to prevent entanglement during hookup and lift-off.

Figure 5-32. M1113 Truck, 1 1/4-Ton with M56 Smoke Generator and M101A2 Trailer (Continued)

M1113 TRUCK, 1 1/4-TON (HMMWV) PETROLEUM QUALITY ANALYSIS SYSTEM (PQAS) SHELTER AND PQAS TRAILER

5-34. The M1113 truck, 1 1/4-ton petroleum quality analysis system shelter and PQAS trailer are rigged for dual-point sling load using the following procedures:

- **Applicability.** The following items in Table 5-33 are certified for the helicopter(s) listed in the following table by the US Army Natick Soldier Center:

Table 5-33. M1113 Truck, 1 1/4-Ton Petroleum Quality Analysis System Shelter and PQAS Trailer

Nomenclature	*Max Weight (Pounds)*	*Sling Set*	*Link Count Front/Rear*	*Type of Aircraft*
M1113 with PQAS Shelter	9,640	25K	30/3	CH-47
PQAS Trailer	3,380	10K	20/45	CH-47

- **Materials.** The following materials are required to rig this load:
  - Sling set (10,000-pound capacity).
    - Additional chain length, part number 38850-00053-101, from a 10,000-pound capacity sling set (4 each).
    - Additional coupling link, part number 664228, from a 10,000-pound sling set (4 each).
  - Sling set (25,000-pound capacity).
    - Chain length, part number 38850-00053-102, from a 25,000-pound capacity sling set (4 each).
    - Coupling link, part number 664241, from a 25,000-pound sling set (4 each).
  - Tape, adhesive, pressure-sensitive, 2-inch wide roll.
  - Cord, nylon, Type III, 550-pound breaking strength.
  - Webbing, cotton, 1/4-inch, 80-pound breaking strength.
  - Strap, cargo, tiedown, CGU-1/B (4 each).
  - Felt sheet, cattle hair, Type IV, 1/2-inch or suitable substitute.

- **Personnel.** Two persons can prepare and rig the truck in 10 minutes. Two persons can prepare and rig the trailer in 20 minutes.
- **Procedures.** Attach the trailer to the truck by placing the lunette on the pintle hook and securing the latch with tape or Type III nylon cord. Secure the safety chains. Position the vehicle on level ground so both the truck and trailer are in a straight line. The following procedures apply to this load:
  - **Preparation.** Prepare the load using the following steps:
    - Fold mirrors inward and tie together with Type III nylon cord. Remove the doors and secure to the seats with Type III nylon cord.
    - Secure all equipment and cargo inside the truck and shelter with tiedown straps, tape, or Type III nylon cord.
    - Ensure the fuel tank is not over 3/4 full. Inspect the fuel tank cap, oil filler cap, and battery caps for proper installation.
    - Engage the vehicle parking brake and put the transmission in neutral.
    - Ensure the front wheels are pointed straight ahead. Tie down the steering wheel, using the securing device attached under the dashboard.
    - Retract the lunette leg and secure with Type III nylon cord.
    - Secure all doors with tiedown straps or Type III nylon cord.
    - Ensure the trailer parking brakes are set.
    - Roll up and tie the large canvas covers on the shelter and tape the small canvas covers down.
    - Close and lock all trailer doors.
    - Route the hook portion of a CGU-1/B tiedown strap through the left rear inboard tiedown provision located near the pintle on the rear bumper of the truck and through the mounting bracket on the front of the trailer A-frame. Connect the hook to the ratchet of the CGU-1/B.
    - Repeat the above procedure on the right side of the load.
    - Tighten both CGU-1/B tiedown straps at the same time. Secure the excess strap and safety the ratchet handles in the closed position with tape.
    - Connect one additional chain length to each chain on each sling set with a coupling link.

CAUTION

Do not connect the CGU-1/B tiedown strap around the truck's rear axle or wheel.

  - **Rigging.** Rig the load according to the steps in Figure 5-33.
  - **Hookup.** Two hookup teams are required for this load. The static wand person discharges the static electricity with the static wand. The forward hookup person stands on top of the vehicle and places apex fitting 1 onto the forward cargo hook. The aft hookup person stands on the trailer fender and places apex fitting 2 onto the aft cargo hook. The hookup team then carefully dismounts the load and remains close to the load as the helicopter removes slack from the sling legs. When successful hookup is assured, the hookup team quickly exits the area underneath the helicopter to the designated rendezvous point.
  - **Derigging.** Derigging is the reverse of the preparation and rigging procedures.

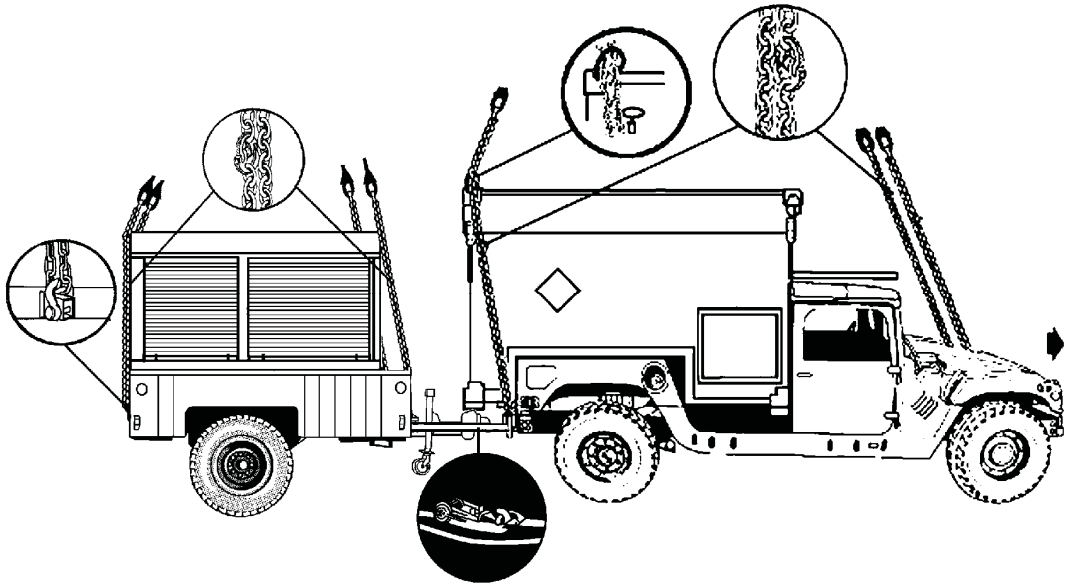

RIGGING STEPS

1. Position the 25,000-pound capacity sling set on top of the truck. Route outer sling legs 1 and 2 to the front of the vehicle and inner sling legs 3 and 4 to the rear. Sling legs 1 and 3 must be on the left side of the load.

2. Loop the chain end of sling leg 1 through the left front lift provision that protrudes through the hood of the vehicle. Place the correct link from Table 5-33 in the grab hook. Repeat with sling leg 2 and the right front lift provision. Secure excess chain with tape or Type III nylon cord.

3. Route the chain end of sling leg 3 through the left shelter lift ring. Loop the chain end through the left lift provision on the bumper and thread back through the left shelter lift ring. Place the correct link from Table 5-33 in the grab link. Repeat with sling leg 4 and the right rear lift provision.

4. Cluster and tie (breakaway technique) all sling legs together on top of the vehicle to prevent entanglement during hookup and lift-off.

5. Position the 10,000-pound capacity sling set 2 on top of the trailer. Route outer sling legs 1and 2 to the front of the trailer and inner sling legs 3 and 4 to the rear of the trailer. Sling legs 1 and 3 must be on the left side of the load.

6. Loop the chain end of sling leg 1 through the left front lift provision located on the front of the trailer. Place the correct link from Table 5-33 in the grab hook. Repeat with sling leg 2 through the right front lift provision. Secure excess chain with tape or Type III nylon cord.

7. Loop the chain end of sling leg 3 through the left rear lift provision. Place the correct link from Table 5-33 in the grab hook. Repeat with sling leg 4 through the right rear lift provision. Secure excess chain with tape or Type III nylon cord.

8. Cluster and tie (breakaway technique) all sling legs together on top of the vehicle to prevent entanglement during hookup and lift-off.

Figure 5-33. M1113 Truck, 1 1/4-Ton Petroleum Quality Analysis System Shelter and PQAS Trailer

This page intentionally left blank.

Chapter 6

Certified Dual-Point Rigging Procedures for Howitzers and Weapons Systems

INTRODUCTION

6-1. This chapter contains rigging procedures for dual-point howitzer and weapon system loads that have been certified for sling load. Each rigging procedure is found in a paragraph that includes a description of the load, materials required for rigging, and steps to complete the procedure. An applicability paragraph is also a part of each paragraph and identifies the certified loads. The certified dual-point rigging procedures for howitzer and weapon system loads are in this section. Paragraphs 6-2 through 6-8 give detailed instructions for rigging loads.

Note. Reach Pendants may be used on dual point loads. Place a Reach Pendant on each apex fitting. A static discharge person is not required when using a Reach Pendant.

M101A1 HOWITZER, 105-MM, WITH OR WITHOUT A-22 CARGO BAGS

6-2. The M101A1 howitzer, 105-mm, with or without A-22 cargo bags are rigged for dual-point sling load using the following procedures:

- **Applicability.** The following items in Table 6-1 are certified for the helicopter(s) listed in the following table by the US Army Natick Soldier Center:

Table 6-1. M101A1 Howitzer, 105-mm, with or without A-22 Cargo Bags

Nomenclature	*Max Weight (Pounds)*	*Sling Set*	*Link Count Front/Rear*	*Type of Aircraft*
M101A1 Howitzer	4,980	10K 25K	30/30 12/12	CH-47
M101A1 Howitzer with One A-22 Cargo Bag	7,180	25K	12/12	CH-47
M101A1 Howitzer with Two A-22 Cargo Bags	9,380	25K	12/12	CH-47
M101A1 Howitzer with Three A-22 Cargo Bags	11,580	25K	12/12	CH-47

- **Materials.** The following materials are required to rig this load:
  - Sling set (10,000- or 25,000-pound capacity) with one additional apex fitting for the sling set being used.

Note. Because of the additional weight of the A-22 cargo bags use the 25,000-pound capacity sling set when sling loading howitzers with accompanying loads.

  - Tape, adhesive, pressure-sensitive, 2-inch wide roll.
  - Cord, nylon, Type III, 550-pound breaking strength.
  - Webbing, cotton, 1/4-inch, 80-pound breaking strength.
  - Felt sheet, cattle hair, Type IV, 1/2-inch or suitable substitute.
  - Additional sling leg assemblies (2,500-pound capacity) from 10,000-pound capacity sling sets (one per A-22 cargo bag).
  - Additional apex fitting (one per accompanying load).
  - Bag, cargo, A-22 (as required).
- **Personnel.** Two persons can prepare and rig this load in 10 minutes.
- **Procedures.** The following procedures apply to this load:
  - **Preparation.** Prepare the load using the following steps:
    - Close and lock the breech.
    - Ensure the trails are closed and secured. Rotate the lunette downward. Safety the trail closing lock handles with tape or Type III nylon cord.
    - Ensure the muzzle cover, breech and tube covers, and all stowed equipment are secured with tape or Type III nylon cord.
    - Pad the gun tube above the cradle around the forward edges of the sleigh assembly with felt padding. Secure the padding with tape or Type III nylon cord.
    - Pad each trail aft of the traveling lock shaft with felt padding. Secure the padding with tape or Type III nylon cord.
    - Set the hand brakes.
    - If required, inspect and prepare the A-22 cargo bag in accordance with FM 4-20.197 as close as possible to the gun trails.
  - **Rigging.** Rig the load according to the steps in Figure 6-1.
  - **Hookup.** Two hookup teams are required for this load. The static wand person stands on the trail of the howitzer and discharges the static electricity with the static wand. The forward hookup person straddles the gun tube and places apex fitting 1 onto the forward cargo hook. The aft hookup person stands on the trails and places apex fitting 2 onto the aft cargo hook. The hookup teams then carefully dismount the howitzer and remain close to the load as the helicopter removes slack from the sling legs. When successful hookup is assured, the hookup teams quickly exit the area underneath the helicopter to the designated rendezvous point.
  - **Derigging.** Derigging is the reverse of the preparation and rigging procedures.

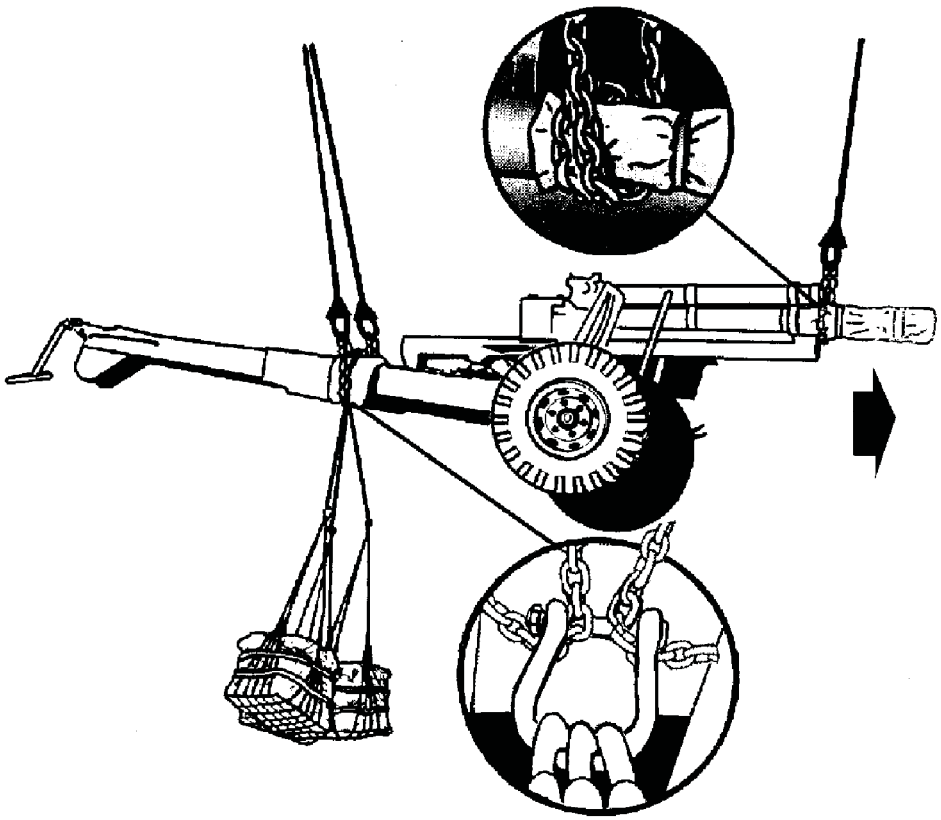

RIGGING STEPS

1. Connect two sling legs to apex fitting number 1. Position the sling set on top of the breech. Both sling legs go around the barrel.

2. Loop the chain end of sling leg 1 around the padded muzzle (one complete wrap). Place the correct link from Table 6-1 in the grab hook. Loop sling leg 2 around the padded muzzle in the opposite direction from sling leg 1 (one complete wrap). Secure excess chain with tape or Type III nylon cord.

3. Connect two sling legs to apex fitting number 2. Position the sling set on top of the gun trails.

4. Wrap the left chain end around the left padded trail two complete wraps. Place the correct link from Table 6-1 in the grab hook. Repeat with the right sling leg and the right padded gun trail. Secure excess chain with tape or Type III nylon cord.

5. Cluster and tie (breakaway technique) the sling legs in each sling set together to prevent entanglement during hookup and lift-off.

6. If required, attach the accompanying A-22 (s) by placing an additional apex fitting around the inner chains of the rear sling legs, so the fitting is between the trails. Route the chain end of an additional sling leg through the clevis on the A-22 cargo bag and insert link 3 in the grab hook. Place the eye of the sling leg in the additional apex fitting between the trails. Repeat this procedure for each A-22 cargo bag being lifted.

Figure 6-1. M101A1 Howitzer, 105-mm, with or without A-22 Cargo Bags

TWO M101A1 HOWITZERS, 105-MM, SIDE BY SIDE (USMC)

6-3. The two M101A1 howitzers, 105-mm, side by side are rigged for dual-point sling load using the following procedures:

- **Applicability.** The following items in Table 6-2 are certified for the helicopter(s) listed in the following table by the US Army Natick Soldier Center:

Table 6-2. Two M101A1 Howitzers, 105-mm, Side by Side

Nomenclature	*Max Weight (Pounds)*	*Sling Set*	*Link Count Front/Rear*	*Type of Aircraft*
Two M101A1 Howitzers, 105-mm, Side by Side	9,012	40K	Listed in Rigging Steps	CH-53

- **Materials.** The following materials are required to rig this load:
  - Sling set (40,000-pound capacity) with one additional apex fitting.
    - Chain length, part number 607050, from a 40,000-pound capacity sling set (2 each).
    - Coupling link, part number 577-0815, from a 40,000-pound sling set (2 each).
  - Tape, adhesive, pressure-sensitive, 2-inch wide roll.
  - Cord, nylon, Type III, 550-pound breaking strength.
  - Webbing, cotton, 1/4-inch, 80-pound breaking strength.
  - Strap, cargo, tiedown, CGU-1/B (as required).
  - Felt sheet, cattle hair, Type IV, 1/2-inch or suitable substitute.
  - Pad, energy, dissipating, honeycomb, 24 inch x 24 inch (2 each) or 4 inch x 4 inch x 24 inch wood (2 each).
- **Personnel.** Two persons can prepare and rig this load in 15 minutes.
- **Procedures.** The following procedures apply to this load:
  - **Preparation.** Prepare the load using the following steps:
    - Position the two howitzers side by side with the barrels facing in opposite directions.
    - Place the honeycomb or wood between the inboard wheel of one howitzer and the inboard trail of the other howitzer. Secure the honeycomb or wood in place with a tiedown strap. Repeat with the other tiedown strap on the inboard wheel of the other howitzer and the inboard trail.
    - Close and lock the breech of each howitzer.
    - Ensure the trails are properly closed and secured. Rotate the lunette downward. Secure the trail closing lock handles with tape or Type III nylon cord.
    - Remove or secure the muzzle, breech, and barrel covers.
    - Remove or pad the sight mounts.
    - Secure loose equipment with tape or Type III nylon cord. Place the section equipment chest on the trails and secure with tiedown straps.
    - Set the hand brake.
    - Wrap padding around the gun tubes above the cradle and the forward edge of the recoil damper assembly. Secure the padding with tape or Type III nylon cord.
    - Wrap padding around the left and right trails of both howitzers just aft of the travel lock shaft area and secure with tape or Type III nylon cord.
  - **Rigging.** Rig the load according to the steps in Figure 6-2.
  - **Hookup.** Two hookup teams are required for this load. The static wand person discharges the static electricity with the static wand. The forward hookup person stands on the trail end of howitzer 2 and places apex fitting 1 onto the forward cargo hook. The aft hookup person stands on the trail end of howitzer 1 and places apex fitting 2 onto the aft cargo hook. The hookup teams

then carefully dismount the howitzers and remain close to the load as the helicopter removes slack from the sling legs. When successful hookup is assured, the hookup teams quickly exit the area underneath the helicopter to the designated rendezvous point.

- **Derigging.** Derigging is the reverse of the preparation and rigging procedures.

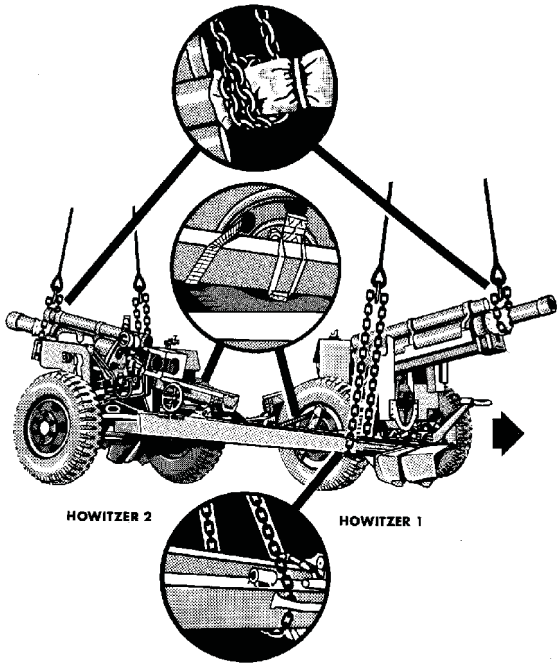

RIGGING STEPS

Note. The howitzer with the barrel facing in the direction of flight is designated as howitzer 1.

1. Place two sling legs on apex fitting number 1. Attach a chain length to one sling leg using the coupling link. Position apex fitting number 1 on top of the barrel of howitzer number 1.

2. Wrap the chain end of the sling leg that does not have the additional chain length once around the padding on the barrel of howitzer 1 and insert link 30 in the grab hook. Secure excess chain with tape or Type III nylon cord.

3. Wrap the chain end of the other sling leg around the padding on the trail end of howitzer 2 and insert link 55 in the grab hook. Secure excess chain with tape or Type III nylon cord.

4. Place two sling legs on apex fitting number 2. Attach a chain length to one sling leg using the coupling link. Position apex fitting number 2 on top of the barrel of howitzer number 2.

5. Wrap the chain end of the sling leg that does not have the additional chain length once around the padding on the barrel of howitzer 2 and insert link 30 in the grab hook. Secure excess chain with tape or Type III nylon cord.

6. Wrap the chain end of the other sling leg around the padding on the trail end of howitzer 1 and insert link 56 in the grab hook. Secure excess chain with tape or Type III nylon cord.

7. Cluster and tie (breakaway technique) the sling legs in each sling set together to prevent entanglement during hookup and lift-off.

Figure 6-2. Two M101A1 Howitzers, Side by Side

M102 HOWITZER, 105-MM

6-4. The M102 howitzer, 105-mm is rigged for dual-point sling load using the following procedures:

- **Applicability.** The following item in Table 6-3 is certified for the helicopter(s) listed in the following table by the US Army Natick Soldier Center:

Table 6-3. M102 Howitzer, 105-mm

Nomenclature	*Max Weight (Pounds)*	*Sling Set*	*Link Count Front/Rear*	*Type of Aircraft*
Howitzer, 105-mm, M102	3,330	10K	70/3	CH-47

- **Materials.** The following materials are required to rig this load:
  - Sling set (10,000-pound capacity) with one additional apex fitting.
  - Tape, adhesive, pressure-sensitive, 2-inch wide roll.
  - Cord, nylon, Type III, 550-pound breaking strength.
  - Webbing, cotton, 1/4-inch, 80-pound breaking strength.
  - Strap, cargo, tiedown, CGU-1/B (as required).
- **Personnel.** Two persons can prepare and rig this load in 10 minutes.
- **Procedures.** The following procedures apply to this load:
  - **Preparation.** Prepare the load using the following steps:
    - Place muzzle and sight covers on howitzer and secure with tape or Type III nylon cord.
    - Place the section equipment chest on the end of the trails and secure with tiedown straps.
    - Set the handbrake.
  - **Rigging.** Rig the load according to the steps in Figure 6-3.
  - **Hookup.** Two hookup teams are required for this load. The static wand person stands on the trail of the howitzer and discharges the static electricity with the static wand. The forward hookup person stands on the wheel and places apex fitting 1 onto the forward cargo hook. The aft hookup person stands on the trails and places apex fitting 2 onto the aft cargo hook. The hookup teams then carefully dismount the howitzer and remain close to the load as the helicopter removes slack from the sling legs. When successful hookup is assured, the hookup teams quickly exit the area underneath the helicopter to the designated rendezvous point.
  - **Derigging.** Derigging is the reverse of the preparation and rigging procedures.

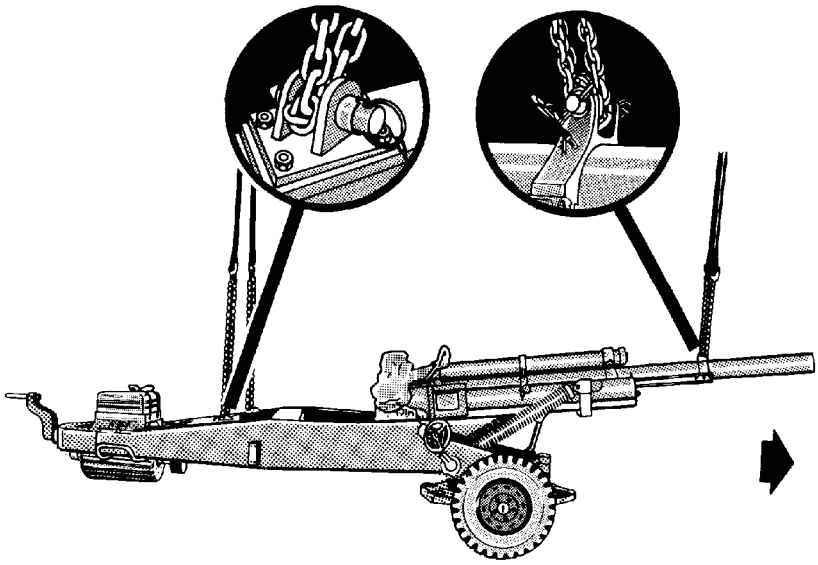

RIGGING STEPS

1. Place two sling legs on apex fitting number 1. Position apex fitting number 1 on top of the howitzer tube.

2. Loop the chain ends of both sling legs through the lifting bracket on the howitzer tube. Place the correct link from Table 6-3 in the grab hook. Secure the excess chain with tape or Type III nylon cord.

3. Place two sling legs on apex fitting number 2. Position apex fitting number 2 between the trails of the howitzer.

4. Loop the chain ends of the left and right sling legs through their respective lift provisions located on the trails. Place the correct link from Table 6-3 in the grab hook.

5. Cluster and tie (breakaway technique) the sling legs in each sling set together to prevent entanglement during hookup and lift-off.

Figure 6-3. M102 Howitzer

TWO M102 HOWITZERS, 105-MM, WITH OR WITHOUT ONE, TWO, OR THREE A-22 CARGO BAGS

6-5. The two M102 howitzers, 105-mm, with or without one, two, or three A-22 cargo bags are rigged for dual-point sling load using the following procedures:

- **Applicability.** The following items in Table 6-4 are certified for the helicopter(s) listed in the following table by the US Army Natick Soldier Center:

Table 6-4. Two M102 Howitzers, 105-mm, with or without One, Two, or Three A-22 Cargo Bags

Nomenclature	*Max Weight (Pounds)*	*Sling Set*	*Link Count Front/Rear*	*Type of Aircraft*
Two Howitzers, 105-mm, M102	6,600	10K	Listed in Rigging Steps	CH-47
Two Howitzers, 105-mm, M102 with One A-22 Cargo Bag	8,800	10K	Listed in Rigging Steps	CH-47
Two Howitzers, 105-mm, M102 with Two A-22 Cargo Bags	11,000	25K	Listed in Rigging Steps	CH-47
Two Howitzers, 105-mm, M102 with Three A-22 Cargo Bags	13,200	25K	Listed in Rigging Steps	CH-47

- **Materials.** The following materials are required to rig this load:
  - Sling set (10,000-pound capacity) (used for rigging two howitzers or two howitzers and one A-22 cargo bag).
    - One additional apex fitting (10,000-pound capacity) (2 additional apex fittings if rigging an accompanying load).
    - One additional sling leg assembly (2,500-pound capacity) (2 additional sling leg assemblies if rigging an accompanying load).

OR

  - Sling set (25,000-pound capacity) (used for rigging two howitzers with two or three A-22 cargo bags).
    - One additional apex fitting (25,000-pound capacity).
    - One additional apex fitting (10,000- or 25,000-pound capacity) (used for accompanying load).
    - Two additional sling leg assemblies (6,250-pound capacity) when rigging two howitzers and two A-22 cargo bags (3 additional sling leg assemblies if rigging three A-22 cargo bags) (6,250-pound capacity).
  - Clevis assembly, medium, used with 25,000-pound capacity sling set (4 each) .
  - Tape, adhesive, pressure-sensitive, 2-inch wide roll.
  - Cord, nylon, Type III, 550-pound breaking strength.
  - Webbing, cotton, 1/4-inch, 80-pound breaking strength.
  - Felt sheet, cattle hair, Type IV, 1/2-inch, 24 inches x 60 inches (2 each) or suitable substitute.
  - Strap, cargo, tiedown, CGU-1/B (as required).
  - Pad, energy, dissipating, honeycomb, 36 inch x 36 inch (1 each) or wood block or felt sheets (4 each).
  - Bag, cargo, A-22 with medium clevis (as required).
- **Personnel.** Two persons can prepare and rig this load in 30 minutes. Add 15 minutes rigging time for each A-22 cargo bag.
- **Procedures.** The following procedures apply to this load:
  - **Preparation.** Prepare the load using the following steps:
    - Position the two howitzers side by side approximately 18 inches apart at the wheels with the barrels facing the same direction.
    - Place the honeycomb pad between the two inboard wheels. Slide both howitzers together and lash the wheels together securely with the tiedown straps.
    - Wrap a sheet of felt around each inboard trail at the center of the load to prevent chafing between trails. Secure the padding with tape or Type III nylon cord. Ensure the lift provisions are exposed.

- Secure all howitzer covers and loose equipment with tape or Type III nylon cord.
- If the 25,000-pound capacity sling set is used, remove the trail lift provision pins and install medium clevises. Reinstall the lift provision pins ensuring the pins are over the bell portion of the clevises.
- If required, inspect and prepare the A-22 cargo bag in accordance with FM 4-20.197 as close as possible to the gun trails.
- Set the handbrake.

- **Rigging.** Rig the load according to the steps in Figure 6-4.
- **Hookup.** Two hookup teams are required for this load. The static wand person stands on the trail of the howitzer and discharges the static electricity with the static wand. The forward hookup person stands on the inner wheels and places apex fitting 1 onto the forward cargo hook. The aft hookup person stands on the trails and places apex fitting 2 onto the aft cargo hook. The hookup teams then carefully dismount the howitzer and remain close to the load as the helicopter removes slack from the sling legs. When successful hookup is assured, the hookup teams quickly exit the area underneath the helicopter to the designated rendezvous point.
- **Derigging.** Derigging is the reverse of the preparation and rigging procedures.

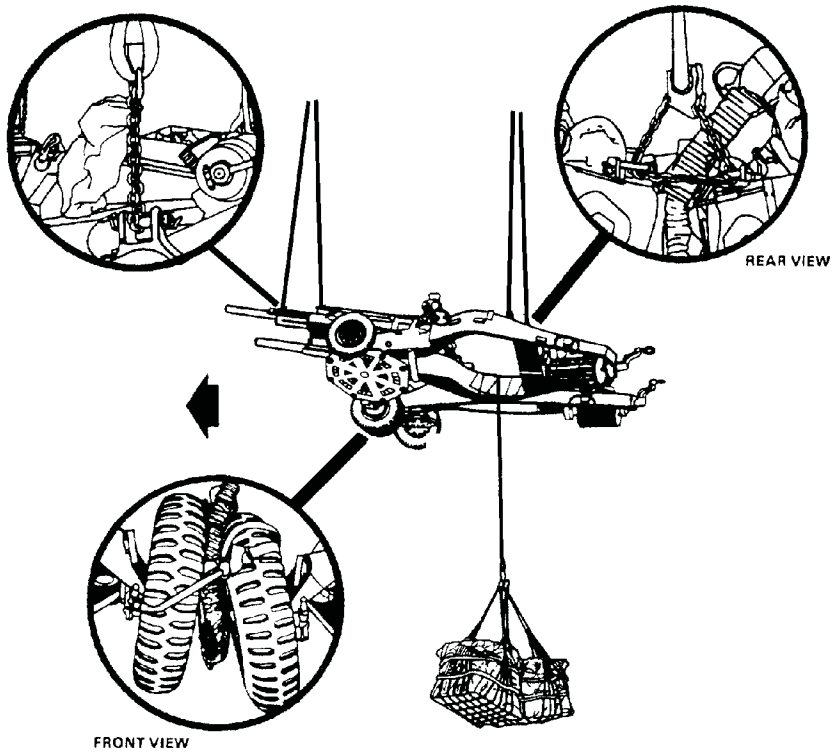

RIGGING STEPS

Note. The chain link number inside the parentheses is used for the 10,000-pound capacity sling set.

1. Connect two sling legs to apex fitting number 1. Position the apex fitting on the ground between the barrels of the howitzers.

Figure 6-4. Two M102 Howitzers, 105-mm, with or without One, Two, or Three A-22 Cargo Bags

RIGGING STEPS (Continued)
2. Loop the chain end of sling leg 1 through the lift provision on the barrel of the left howitzer and insert link 42 (60) in the grab hook. Repeat with sling leg 2 on the lift provision on the barrel of the right howitzer. Secure excess chain with tape or Type III nylon cord. 3. Connect three sling legs to apex fitting number 2. Position the apex fitting on the two inner wheels. 4. Route outer sling legs 1 and 2 to the outboard trails of the left and right howitzers respectively. Route inner sling leg 3 to the two inboard trails. 5. Loop the chain end of sling leg 1 through the lift provision or medium clevis on the outboard trail of the left howitzer and insert link 3 (3) in the grab hook. Repeat with sling leg 2 on the lift provision on the outboard trail of the right howitzer. 6. Loop the chain end of inner sling leg 3 through the lift provisions or the medium clevises located on the inboard trails of both howitzers and insert link 16 (20) in the grabhook. Secure excess chain with tape or Type III nylon cord. 7. Cluster and tie (breakaway technique) the sling legs in each sling set together to prevent entanglement during hookup and lift-off. 8. If lifting an accompanying load, wrap the chain end of the additional sling leg (s) around the padded inboard trails and insert link 42 (60) in the grab hook. The chain should be as tight as possible. Route the other end of the sling leg under the trail toward the accompanying load. Place the additional apex fitting through the sling leg (s) eyelet. Place the medium clevises of the A-22 cargo bags on the bolt of the apex fitting.

Figure 6-4. Two M102 Howitzers, 105-mm, with or without One, Two, or Three A-22 Cargo Bags (Continued)

TWO M119A2 HOWITZERS, 105-MM, FORWARD FIRING POSITION, SIDE BY SIDE

6-6. The two M119A2 howitzers, 105-mm, forward firing position, side by side are rigged for dual-point sling load using the following procedures:

- **Applicability.** The following items in Table 6-5 are certified for the helicopter(s) listed in the following table by the US Army Natick Soldier Center:.

Table 6-5. Two M119A2 Howitzers, 105-mm, Forward Firing Position, Side by Side

Nomenclature	*Max Weight (Pounds)*	*Sling Set*	*Link Count Front/Rear*	*Type of Aircraft*
Two Howitzers, 105-mm, M119A2	9,400	25K	Listed in Rigging Steps	CH-47

- **Materials.** The following materials are required to rig this load:
  - Sling set (25,000-pound capacity).
  - One additional apex fitting (25,000-pound capacity).
  - Two additional sling leg assemblies (from a 25,000-pound capacity).
  - Tape, adhesive, pressure-sensitive, 2-inch wide roll.

- Cord, nylon, Type III, 550-pound breaking strength.
- Webbing, cotton, 1/4-inch, 80-pound breaking strength.
- Felt sheet, cattle hair, Type IV, 1/2-inch, 24 inches x 60 inches (2 each) or suitable substitute.
- Strap, cargo, tiedown, CGU-1/B (3 each).
- Sling set chain safety clamp (4 each).
- Webbing, nylon, tubular, ½-inch, 1000-pound breaking strength (as required).
- Netting, camouflage or pad energy dissipating (honeycomb).

- **Personnel.** Three persons can prepare and rig this load in 30 minutes
- **Procedures.** The following procedures apply to this load:
  - **Preparation.** Prepare the load using the following steps:
    - Place both howitzers in the forward firing position.
    - Position the two howitzers side by side approximately 18 inches apart at the wheels with the barrels facing the same direction.
    - Ensure the wheel knock-off hubs are horizontal.
    - Place the camouflage net or honeycomb pad between the two inboard wheels.
    - Wrap a sheet of felt around each inboard trail at the center of the load to prevent chafing between trails. Secure the padding with tape or Type III nylon cord
    - Secure the sight covers to the dial sights with tape or Type III nylon cord. Secure all howitzer covers and loose equipment with tape or Type III nylon cord.
    - Secure the firing platforms, hand spikes, and jacks to the trail assembly with Type III nylon cord.
    - Remove and stow the roll bars.
    - Ensure the lunettes are in the extended position. Install the towing eye stops (C-clamp) on the lunettes and secure in place with the retaining pins.
    - If the detachable field spade is attached to the permanent spades, ensure the two lacking pins are installed and locked. Route and tie a length of Type III nylon cord through the key ring and around the end of the locking pin
  - **Rigging.** Rig the load according to the steps in Figure 6-5.
  - **Hookup.** Two hookup teams are required for this load. The static wand person stands on the trail of the howitzer and discharges the static electricity with the static wand. The forward hookup person stands on the inner wheels and places apex fitting 1 onto the forward cargo hook. The aft hookup person stands on the trails and places apex fitting 2 onto the aft cargo hook. The hookup teams then carefully dismount the howitzer and remain close to the load as the helicopter removes slack from the sling legs. When successful hookup is assured, the hookup teams quickly exit the area underneath the helicopter to the designated rendezvous point.
  - **Derigging.** Derigging is the reverse of the preparation and rigging procedures.

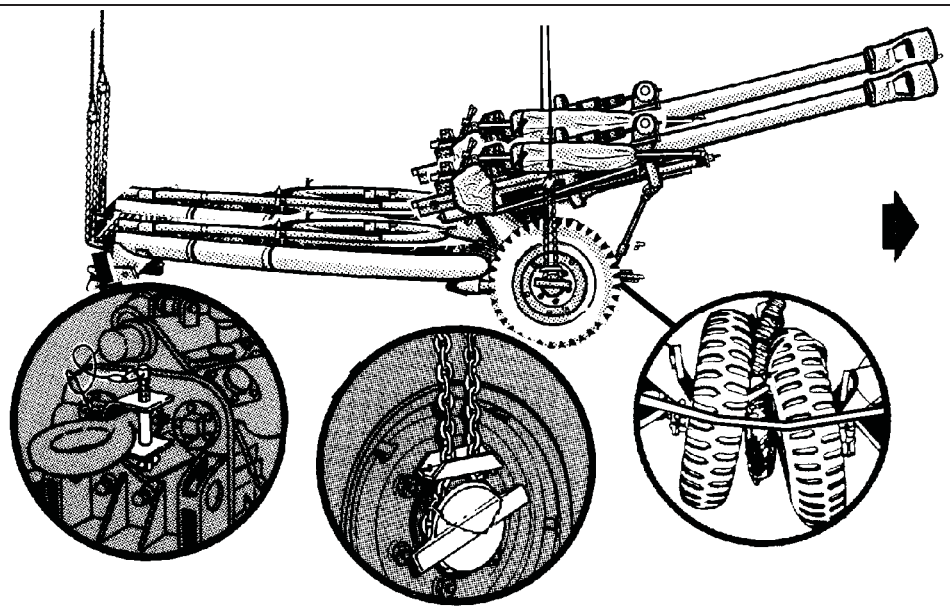

RIGGING STEPS

1. Connect four sling legs to apex fitting number 1. Position the apex fitting on the breech assembly. Route outer sling legs 1 and 2 to the outer wheel hubs. Route inner sling legs 3 and 4 to the inner wheel hubs.

2. Loop the chain end of sling leg 3 around the left inside wheel hub and insert link 45 in the grab hook. Pull the chain taut and ensure the chain is centered on the hub. Install the sling set chain safety clamp on the two chain links closet to the top of the wheel hub as shown in TM 9-1015-252-10. If the sling set chain safety clamp is not available, tie the two links together with ½-inch tubular nylon webbing. Repeat with sling leg 4 on the right inside wheel hub and place link 49 in the grab hook. Secure excess chain with tape or Type III nylon cord.

3. Position both howitzers close together with the camouflage net and honeycomb between the inside wheels.

4. Loop the chain end of sling leg 1 around the left outside wheel hub and insert link 30 in the grab hook. Pull the chain taut and ensure the chain is centered on the hub. Install the sling set chain safety clamp on the two chain links closet to the top of the wheel hub as shown in TM 9-1015-252-10. If the sling set chain safety clamp is not available, tie the two links together with ½-inch tubular nylon webbing. Repeat with sling leg 2 on the right inside wheel hub and place link 30 in the grab hook. Secure excess chain with tape or Type III nylon cord.

5. Connect two sling legs to apex fitting number 2. Position the apex fitting on the firing platform and route sling leg 1 to the left lunette and sling leg 2 to the right lunette.

6. Route outer sling legs 1 and 2 to the outboard trails of the left and right howitzers respectively. Route inner sling leg 3 to the two inboard trails.

7. Loop the chain end of sling leg 1 through the left lunette and insert link 25 in the grab hook. Repeat with sling leg 2 on the right lunette and insert link 25 in the grab hook. Secure excess chain with tape or Type III nylon cord.

Figure 6-5. Two M119A2 Howitzers, 105-mm, Forward Firing Position, Side by Side

RIGGING STEPS (Continued)
8. Cluster and tie (breakaway technique) the sling legs in each sling set together to prevent entanglement during hookup and lift-off. 9. Route a CGU-1/B cargo tiedown strap around the carriage forward of the rebound brackets. Do not tighten at this time. 10. Pad each tube trail with felt or cardboard at the point where they contact. Tape or tie the padding in place. 11. Route two CGU-1/B cargo tiedown straps around both inboard tube trails. One forward and one aft of the firing platform. Tighten all 3 CGU-1/B cargo tiedown straps at the same time.

Figure 6-5. Two M119A2 Howitzers, 105-mm, Forward Firing Position, Side by Side (Continued)

M198 HOWITZER, 155-MM, TOWED WITH EXTERNAL AIRLIFT TRAVEL LOCK ASSEMBLY

6-7. The M198 howitzer, 155-mm, towed with external airlift travel lock assembly is rigged for dual-point sling load using the following procedures:

- **Applicability.** The following item in Table 6-6 is certified for the helicopter(s) listed in the following table by the US Army Natick Soldier Center:

Table 6-6. M198 Howitzer, 155-mm, Towed with External Airlift Travel Lock Assembly

Nomenclature	*Max Weight (Pounds)*	*Sling Set*	*Link Count Front/Rear*	*Type of Aircraft*
M198 Howitzer, 155-mm, Towed with External Airlift Travel Lock Assembly	15,740	25K	33/3	CH-47

- **Materials.** The following materials are required to rig this load:
  - Sling set (25,000-pound capacity) with one additional apex fitting.
  - Tape, adhesive, pressure-sensitive, 2-inch wide roll.
  - Cord, nylon, Type III, 550-pound breaking strength.
  - Webbing, cotton, 1/4-inch, 80-pound breaking strength.
  - Felt sheet, cattle hair, Type IV, 1/2-inch or suitable substitute.
  - Strap, cargo, tiedown, CGU-1/B (as required).
  - Clevis assembly, large (one per lift provision).
  - Reach pendant, 11,000- or 25,000-pound capacity (2 each).
- **Personnel.** Two persons can prepare and rig this load in 20 minutes.
- **Procedures.** The following procedures apply to this load:
  - **Preparation.** Prepare the load using the following steps:
    - Secure the spades to the trails with CGU-1/B tiedown straps.
    - Secure the air hoses and electrical cable to the outboard side of the right trail with tape or Type III nylon cord.
    - Stow and secure all equipment in place with tape or Type III nylon cord.
    - Pad the sight mounts with felt padding. Secure the padding with tape or Type III nylon cord.
    - Attach a large clevis assembly to the trail and carriage lifting provisions.
  - Ensure the top carriage locking pin is in place and secured with a locking safety clip.

CAUTION

Do not attempt to lift the howitzer if the top carriage lock pin will not drop into place or if the locking safety clip is missing. Either of these conditions could result in the top carriage rotating in flight.

- Position the barrel and install the travel lock. Secure the lock with pins.
- Attach a reach pendant to each apex fitting in accordance with FM 4-20.197.
- Set the handbrakes.

- **Rigging.** Rig the load according to the steps in Figure 6-6.
- **Hookup.** Two hookup teams are required for this load. The forward hookup person stands on top of the gun carriage and places apex fitting 1 onto the forward cargo hook. The aft hookup person stands on the firing base plate and places apex fitting 2 onto the aft cargo hook. The hookup teams then carefully dismount the howitzer and remain close to the load as the helicopter removes slack from the sling legs. When successful hookup is assured, the hookup team quickly exits the area underneath the helicopter to the designated rendezvous point.

Note. The helicopter must approach the howitzer over the trails.

- **Derigging.** Derigging is the reverse of the preparation and rigging procedures.

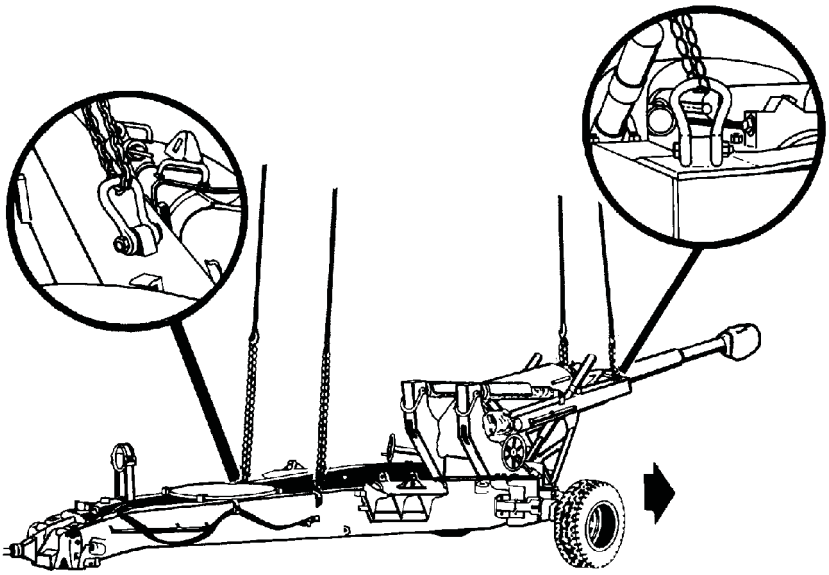

RIGGING STEPS

1. Connect two sling legs to apex fitting number 1. Position the sling set on top of the forward end of the breech.

Figure 6-6. M198 Howitzer

RIGGING STEPS (Continued)
2. Loop the chain end of the sling legs through the large clevises installed on their respective lift provisions located on the carriage. Place the correct link from Table 6-6 in the grab hook. Secure excess chain with tape or Type III nylon cord. 3. Connect two sling legs to apex fitting number 2. Position the sling set on top of the baseplate between the trails. 4. Loop the chain end of the sling legs through the large clevises installed on their respective lift provisions located on the trails. Place the correct link from Table 6-6 in the grab hook. Secure excess chain with tape or Type III nylon cord. 5. Cluster and tie (breakaway technique) the sling legs in each sling set together to prevent entanglement during hookup and lift-off.

Figure 6-6. M198 Howitzer (Continued)

M777/M777A1/M777A2, 155-MM LIGHTWEIGHT HOWITZER

6-8. The M777/M777A1/M777A2, 155-mm lightweight howitzer is rigged for dual-point sling load using the following procedures:

- **Applicability.** The following items in Table 6-7 are certified for the helicopter(s) listed in the following table by the US Army Natick Soldier Center:

Table 6-7. M777/M777A1/M777A2, 155-mm Lightweight Howitzer

Nomenclature	*Max Weight (Pounds)*	*Sling Set*	*Link Count Front/Rear*	*Type of Aircraft*
M777, 155-mm Lightweight Howitzer	9,300	15K 25K	80/3	CH-53 CH-47
M777A1, 155-mm Lightweight Howitzer	9,800	15K 25K	80/3	CH-53 CH-47
M777A2, 155-mm Lightweight Howitzer	9,920	15K 25K	80/3	CH-53 CH-47

- **Materials.** The following materials are required to rig this load:
  - Sling set (15,000-pound capacity) with one additional web ring.
    - Additional chain length, part number 34080-4, from a 15,000-pound capacity sling set (4 each).
    - Additional coupling link, part number 31611, from a 15,000-pound capacity sling set (4 each).

    OR
  - Sling set (25,000-pound capacity) with one additional apex fitting.
    - Additional chain length, part number 38850-00053-102, from a 25,000-pound capacity sling set (4 each).
    - Additional coupling link, part number 664241, from a 25,000-pound sling set (4 each).
  - Tape, adhesive, pressure-sensitive, 2-inch wide roll.
  - Cord, nylon, Type III, 550-pound breaking strength.
  - Webbing, cotton, 1/4-inch, 80-pound breaking strength.
- **Personnel.** Two persons can prepare and rig this load in 20 minutes.
- **Procedures.** The following procedures apply to this load:

- **Preparation.** Prepare the load using the following steps:
  - Ensure the stabilizers are in the firing position.
  - The spades may be in the up (stowed position) or down (firing position).
  - Secure the air hoses and electrical cable to the supporting structure with Type III nylon cord.
  - Stow and secure all equipment with tape or Type III nylon cord.
  - Ensure the barrel is in the firing position.
  - Extend the sling leg chains by connecting one additional chain length to each chain on the sling set with coupling links.
- **Rigging.** Rig the load according to the steps in Figure 6-7.
- **Hookup.** Two hookup teams are required for this load. The static wand person discharges the static electricity with the static wand. One hookup person stands on the tongue and places web ring 1 onto the forward cargo hook. The other hookup person stands on the firing base plate and places web ring 2 onto the aft cargo hook. The hookup teams then carefully dismount the howitzer and remain close to the load as the helicopter removes slack from the sling legs. When successful hookup is assured, the hookup team quickly exits the area underneath the helicopter to the designated rendezvous point.

Note. The helicopter must approach the howitzer over the spades.

- **Derigging.** Derigging is the reverse of the preparation and rigging procedures.

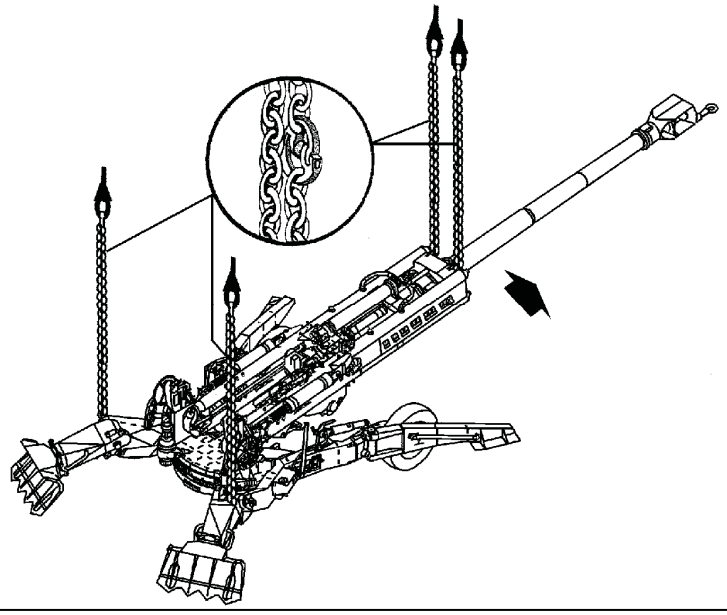

RIGGING STEPS

1. Place two sling legs on web ring number 1. Position apex fitting number 1 on top of the forward end of the breech.

2. Loop the chain end of the left and right sling legs through their respective lift provision located on both sides of the barrel. Place the correct link from Table 6-7 in the grab hook. Secure excess chain with tape or Type III nylon cord.

Figure 6-7. M777/M777A1/M777A2, 155-mm Lightweight Howitzer

RIGGING STEPS (Continued)
3. Place two sling legs on web ring number 2. Position apex fitting number 2 on top of the baseplate between the spades. 4. Loop the chain end of the left and right sling legs through their respective lift provision located near the spades. Place the correct link from Table 6-7 in the grab hook. 5. Cluster and tie (breakaway technique) the sling legs in each sling set together to prevent entanglement during hookup and lift-off.

Figure 6-7. M777/M777A1/M777A2, 155-mm Lightweight Howitzer (Continued)

This page intentionally left blank.

Chapter 7

Certified Dual-Point Rigging Procedures for Missile Systems

INTRODUCTION

7-1. This chapter contains rigging procedures for dual-point missile system loads that have been certified for sling load. Each rigging procedure is found in a paragraph that includes a description of the load, materials required for rigging, and steps to complete the procedure. An applicability paragraph is also a part of each paragraph and identifies the certified loads. The certified dual-point rigging procedures for missile system loads are in this section. Paragraphs 7-2 through 7-10 give detailed instructions for rigging loads.

Note. Reach Pendants may be used on dual point loads. Place a Reach Pendant on each apex fitting. A static discharge person is not required when using a Reach Pendant.

AVENGER

7-2. The Avenger is rigged for dual-point sling load using the following procedures:

- **Applicability.** The following items in Table 7-1 are certified for the helicopter(s) listed in the following table by the US Army Natick Soldier Center.

Table 7-1. Avenger

Nomenclature	*Max Weight (Pounds)*	*Sling Set*	*Link Count Front/Rear*	*Type of Aircraft*
Avenger on M998	8,513	10K 15K 40K	50/5 40/5 32/4	CH-47 CH-53 CH-53
Avenger on M1097	9,087	10K 15K 40K	50/5 40/5 32/4	CH-47 CH-53 CH-53

- **Materials.** The following materials are required to rig this load:
  - Sling set (10,000- or 40,000-pound capacity) with one additional apex fitting for the sling set being used or two 15,000-pound capacity sling sets.
  - Tape, adhesive, pressure-sensitive, 2-inch wide roll.
  - Cord, nylon, Type III, 550-pound breaking strength.
  - Webbing, cotton, 1/4-inch, 80-pound breaking strength.
- **Personnel.** Two persons can prepare and rig this load in 15 minutes.
- **Procedures.** The following procedures apply to this load:
  - **Preparation.** Prepare the load using the following steps:
    - Fold the mirrors inward and secure with Type III nylon cord.
    - Ensure the Avenger fire unit is secured to the truck. Secure all equipment inside the fire unit with tape, lashings, or Type III nylon cord. Close and secure the door.

- Disconnect the standard vehicle-mounted launcher connectors from the missile pods and secure them to the fire unit with tape or Type III nylon cord.
- Secure all equipment inside the vehicle with tape or Type III nylon cord. Secure the doors shut (if installed).
- Ensure the fuel tank is not over 3/4 full. Inspect the fuel tank cap, oil filler cap, and battery caps for proper installation.
- Engage the vehicle parking brake and place the transmission in neutral.
- Ensure the front wheels are pointed straight ahead. Tie down the steering wheel using the securing device attached under the dashboard.

■ **Rigging.** Rig the load according to the steps in Figure 7-1.

■ **Hookup.** Two hookup teams are required for this load. The hookup teams stand on top of the firing unit. The static wand person discharges the static electricity with the static wand. The forward hookup person places apex fitting 1 onto the forward cargo hook. The aft hookup person places apex fitting 2 onto the aft cargo hook. The hookup teams then carefully dismount the vehicle and remain close to the load as the helicopter removes slack from the sling legs. When successful hookup is assured, the hookup teams quickly exit the area underneath the helicopter to the designated rendezvous point.

■ **Derigging.** Derigging is the reverse of the preparation and rigging procedures.

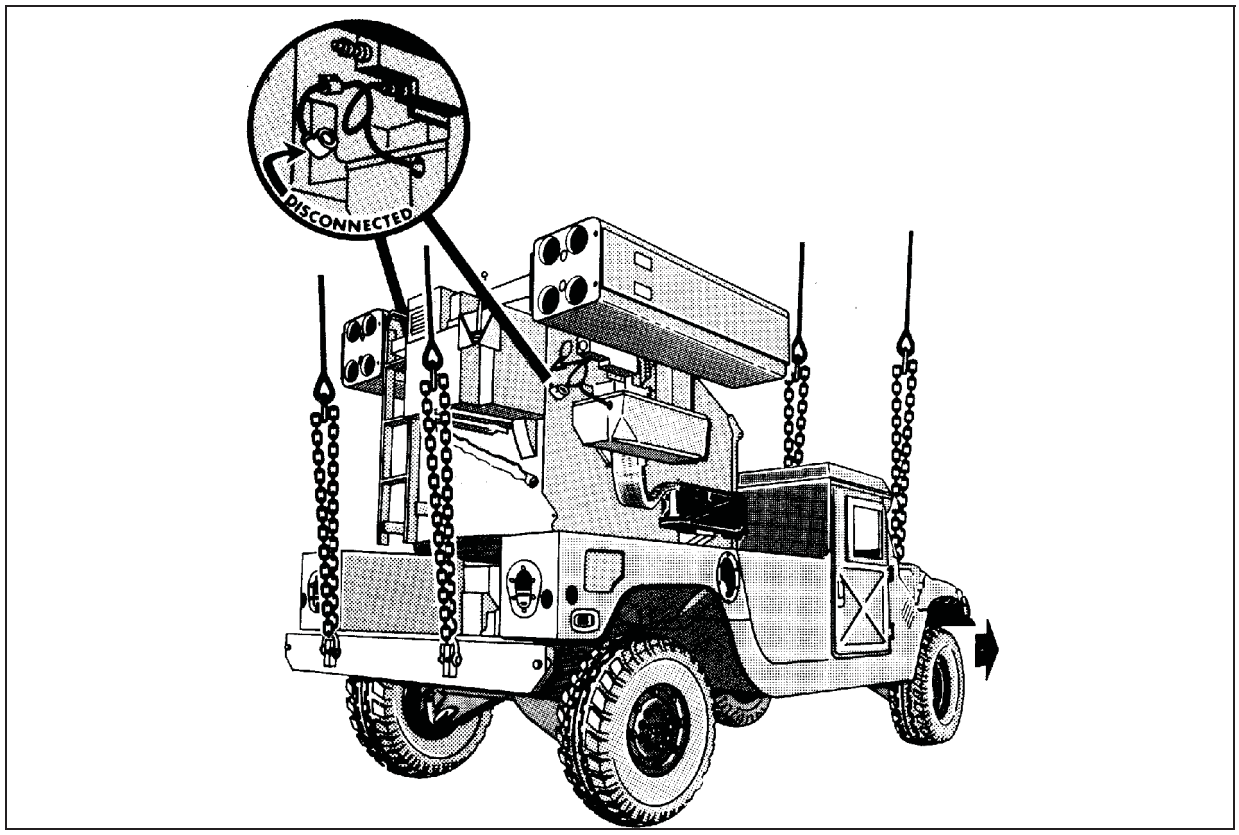

Figure 7-1. Avenger

RIGGING STEPS

Note. When using the 15,000-pound capacity sling set, do not remove the two inner sling leg assemblies. Tape the two inner unused sling legs to the two outer load-carrying sling legs.

1. Place two sling legs on apex fitting number 1. Position apex fitting number 1 on top of the firing unit.

2. Loop the chain end of the left and right sling legs through their respective lift provisions that protrude through the hood of the vehicle. Place the correct link from Table 7-1 in the grab hook. Secure excess chain with tape or Type III nylon cord.

3. Place two sling legs on apex fitting number 2. Position apex fitting number 2 on top of the firing unit.

4. Loop the chain end of the left and right sling legs through their respective lift provisions located on the rear bumper. Place the correct link from Table 7-1 in the grab hook.

CAUTION

Do not place the sling legs in the sling leg guides located on top of the firing unit.

5. Cluster and tie (breakaway technique) the sling legs in each sling set together to prevent entanglement during hookup and lift-off.

Figure 7-1. Avenger (Continued)

AVENGER ON M1097/M1097A1/M1097A2 WITH ECU AND PPU WITH OR WITHOUT BUSTLE BOX STOWED ON ROOF

7-3. The Avenger on M1097/M1097A1/M1097A2 with ECU and PPU with or without bustle box stowed on roof is rigged for dual-point sling load using the following procedures:

- **Applicability.** The following items in Table 7-2 are certified for the helicopter(s) listed in the following table by the US Army Natick Soldier Center:.

Table 7-2. Avenger

Nomenclature	*Max Weight (Pounds)*	*Sling Set*	*Link Count Front/Rear*	*Type of Aircraft*
Avenger with ECU and PPU on M1097	9,800	10K 25K	50/3 40/5	CH-47
Avenger with ECU and PPU on M1097A1	9,800	10K 25K	50/3 40/5	CH-47
Avenger with ECU and PPU on M1097A2	10,300	25K	40/5	CH-47

- **Materials.** The following materials are required to rig this load:
  - Sling set (25,000-pound capacity) with one additional apex.
    - Additional chain length, part number 38850-00053-102, from a 25,000-pound capacity sling set (4 each).
    - Additional coupling link, part number 664241, from a 25,000-pound capacity sling set (4 each).

OR

- Sling set (10,000-pound capacity) with one additional apex.
  - Additional chain length, part number 38850-00053-101, from a 10,000-pound capacity sling set (4 each).
  - Additional coupling link, part number 557-0615, from a 10,000-pound capacity sling set (4 each).
- Tape, adhesive, pressure-sensitive, 2-inch wide roll.
- Cord, nylon, Type III, 550-pound breaking strength.
- Webbing, cotton, 1/4-inch, 80-pound breaking strength.

- **Personnel.** Two persons can prepare and rig this load in 15 minutes.
- **Procedures.** The following procedures apply to this load:
  - **Preparation.** Prepare the load using the following steps:
    - Fold the mirrors inward and secure with Type III nylon cord.
    - Ensure the Avenger fire unit is secured to the truck. Secure all equipment inside the fire unit with tape, lashings, or Type III nylon cord. Close and secure the door.
    - Disconnect the standard vehicle-mounted launcher connectors from the missile pods and secure them to the fire unit with tape or Type III nylon cord.
    - Secure all equipment inside the vehicle with tape or Type III nylon cord. Secure the doors shut (if installed).
    - Ensure the fuel tank is not over 3/4 full. Inspect the fuel tank cap, oil filler cap, and battery caps for proper installation.
    - Secure the bustle box to the box rack on the roof of the vehicle using the tiedown straps (if needed).

Note. The bustle box can only be carried if the roof rack is installed on the roof.

    - Engage the vehicle parking brake and place the transmission in neutral.
    - Ensure the front wheels are pointed straight ahead. Tie down the steering wheel using the securing device attached under the dashboard or Type III nylon cord.
  - **Rigging.** Rig the load according to the steps in Figure 7-2.
  - **Hookup.** Two hookup teams are required for this load. The hookup teams stand on top of the firing unit. The static wand person discharges the static electricity with the static wand. The forward hookup person places apex fitting 1 onto the forward cargo hook. The aft hookup person places apex fitting 2 onto the aft cargo hook. The hookup teams then carefully dismount the vehicle and remain close to the load as the helicopter removes slack from the sling legs. When successful hookup is assured, the hookup teams quickly exit the area underneath the helicopter to the designated rendezvous point.
  - **Derigging.** Derigging is the reverse of the preparation and rigging procedures.

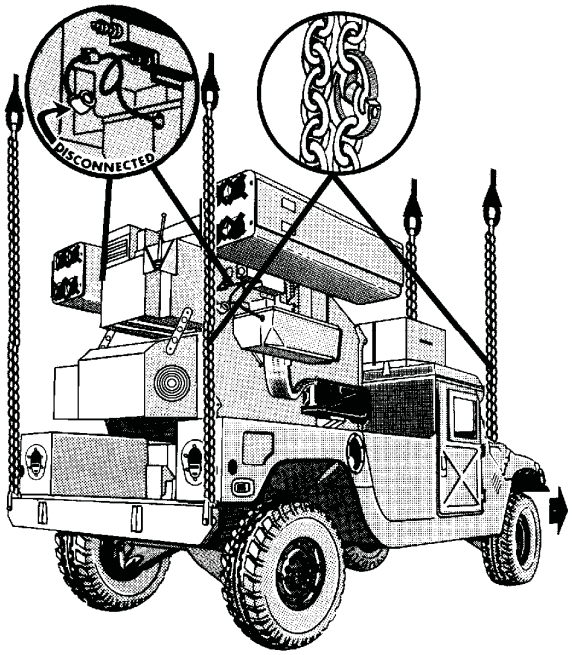

CAUTION

Do not place the sling legs in the sling leg guides located on top of the firing unit.

RIGGING STEPS

1. Place two sling legs on apex fitting number 1. Attach an additional chain length to each chain using coupling links. Position apex fitting number 1 on top of the vehicle roof or bustle box (if used).

2. Loop the chain end of the left and right sling legs through their respective lift provisions that protrude through the hood of the vehicle. Place the correct link from Table 7-2 in the grab hook. Secure excess chain with tape or Type III nylon cord.

3. Place two sling legs on apex fitting number 2. Attach an additional chain length to each chain using coupling links. Position apex fitting number 2 on top of the firing unit.

4. Loop the chain end of the left and right sling legs through their respective lift provisions located on outside end of the rear bumper. Place the correct link from Table 7-2 in the grab hook.

5. Cluster and tie (breakaway technique) the sling legs in each sling set together to prevent entanglement during hookup and lift-off.

Figure 7-2. Avenger on M1097A2 HMMWV with ECU and PPU

CAUTION

Do not use the lift shackles located near the center of the rear bumper for sling load lift provisions.

M1113 TRUCK, 1 1/4-TON (HMMWV) WITH LINE OF SIGHT ANTI-TANK (LOSAT) FIRE UNIT WITH RELOADER CRANE AND FOUR MISSILES

7-4. The M1113 truck, 1 1/4-ton with line of sight anti-tank fire unit with reloader crane and four missiles are rigged for dual-point sling load using the following procedures:

- **Applicability.** The following item in Table 7-3 is certified for the helicopter(s) listed in the following table by the US Army Natick Soldier Center:

Table 7-3. M1113 Truck, 1 1/4-Ton with Line of Sight Anti-Tank Fire Unit with Reloader Crane and Four Missiles

Nomenclature	*Max Weight (Pounds)*	*Sling Set*	*Link Count Front/Rear*	*Type of Aircraft*
M1113 Truck, 1 1/4-Ton with Line of Sight Anti-Tank Fire Unit with Reloader Crane and Four Missiles	10,920	25K	40/3	CH-47

- **Materials.** The following materials are required to rig this load:
  - Sling set (25,000-pound capacity).
    - Additional chain length, part number 38850-00053-102, from a 25,000-pound capacity sling set (4 each).
    - Additional coupling link, part number 664241, from a 25,000-pound sling set (4 each).
  - Tape, adhesive, pressure-sensitive, 2-inch wide roll.
  - Cord, nylon, Type III, 550-pound breaking strength.
  - Webbing, cotton, 1/4-inch, 80-pound breaking strength.
  - Felt sheet, cattle hair, Type IV, 1/2-inch or suitable substitute.
- **Personnel.** Two persons can prepare and rig the truck in 10 minutes
- **Procedures.** The following procedures apply to this load:
  - **Preparation.** Prepare the load using the following steps:
    - Fold mirrors inward and tie together with Type III nylon cord. Remove the doors and secure to the seats with Type III nylon cord.
    - Secure all equipment and cargo inside the truck with tiedown straps, tape, or Type III nylon cord.
    - Ensure the fuel tank is not over 3/4 full. Inspect the fuel tank cap, oil filler cap, and battery caps for proper installation.
    - Engage the vehicle parking brake and put the transmission in neutral.
    - Ensure the front wheels are pointed straight ahead. Tie down the steering wheel, using the securing device attached under the dashboard.
    - Connect one additional chain length to each chain on each sling set with a coupling link.
  - **Rigging.** Rig the load according to the steps in Figure 7-3.
  - **Hookup.** Two hookup teams are required for this load. The static wand person discharges the static electricity with the static wand. The forward hookup person stands on top of the vehicle and places apex fitting 1 onto the forward cargo hook. The aft hookup person stands on top of the

vehicle and places apex fitting 2 onto the aft cargo hook. The hookup team then carefully dismounts the load and remains close to the load as the helicopter removes slack from the sling legs. When successful hookup is assured, the hookup team quickly exits the area underneath the helicopter to the designated rendezvous point.

- **Derigging.** Derigging is the reverse of the preparation and rigging procedures.

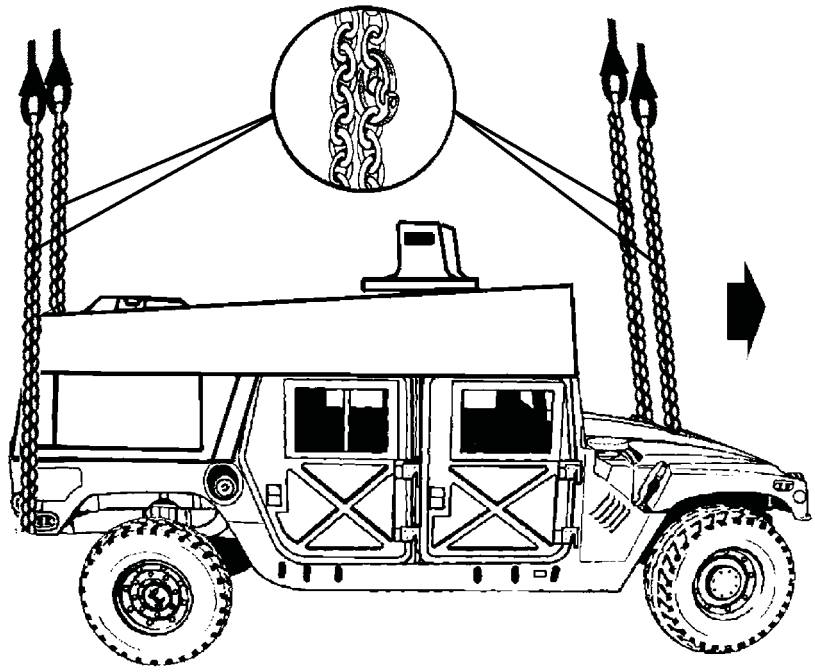

RIGGING STEPS

1. Place two sling legs on apex fitting number 1. Attach an additional chain length to each chain using coupling links. Position apex fitting number 1 on top of the vehicle roof or bustle box (if used).

2. Loop the chain end of the left and right sling legs through their respective lift provisions that protrude through the hood of the vehicle. Place the correct link from Table 7-3 in the grab hook. Secure excess chain with tape or Type III nylon cord.

3. Place two sling legs on apex fitting number 2. Position apex fitting number 2 on top of the firing unit.

4. Loop the chain end of the left and right sling legs through their respective lift provisions located on outside end of the rear bumper. Pad the slings where they contact the vehicle. Place the correct link from Table 7-3 in the grab hook.

5. Cluster and tie (breakaway technique) the sling legs in each sling set together to prevent entanglement during hookup and lift-off.

Figure 7-3. M1113 Truck, 1 1/4-Ton with Line of Sight Anti-Tank Fire Unit with Reloader Crane and Four Missiles

M1097A2 TRUCK, 1 1/4-TON (HMMWV) WITH COMPLEMENTARY LOW ALTITUDE WEAPONS SYSTEM (CLAWS)

7-5. The M1097A2 trucks, 1 1/4-ton with complementary low altitude weapons system are rigged for dual-point sling load using the following procedures:

- **Applicability.** The following items in Table 7-4 are certified for the helicopter(s) listed in the following table by the US Army Natick Soldier Center:

Table 7-4. M1097A2 Truck, 1 1/4-Ton with Complementary Low Altitude Weapons System

Nomenclature	*Max Weight (Pounds)*	*Sling Set*	*Link Count Front/Rear*	*Type of Aircraft*
M1097A2 Truck, 1 1/4-Ton with Complementary Low Altitude Weapons System without Missiles	10,300	15K	30/3	CH-53
M1097A2 Truck, 1 1/4-Ton with Complementary Low Altitude Weapons System with Two (2) Missiles Mounted on the Outside Rails	10,300	15K	30/3	CH-53

- **Materials.** The following materials are required to rig this load:
  - Multileg sling set (15,000-pound capacity) with one additional apex fitting.
    - Chain length, part number 34080-4, from a 15,000-pound capacity sling set (4 each).
    - Coupling link, part number 31611, from a 15,000-pound sling set (4 each).
  - Tape, adhesive, pressure-sensitive, 2-inch wide roll.
  - Cord, nylon, Type III, 550-pound breaking strength.
  - Webbing, cotton, 1/4-inch, 80-pound breaking strength.
- **Personnel.** Two persons can prepare and rig the truck in 15 minutes
- **Procedures.** The following procedures apply to this load:
  - **Preparation.** Prepare the load using the following steps:
    - Fold mirrors inward and tie together with Type III nylon cord. Remove the doors and secure to the seats with Type III nylon cord.
    - Ensure the launcher unit is secure to the truck. Secure all equipment and cargo inside the truck with tiedown straps, tape, or Type III nylon cord. Roll up the windows and secure the doors shut (if installed).
    - Disconnect the standard vehicle-mounted launcher connectors from the missile pods and secure them to the fire unit with tape or Type III nylon cord.
    - Ensure the fuel tank is not over 3/4 full. Inspect the fuel tank cap, oil filler cap, and battery caps for proper installation.
    - Remove and secure the missile fins according to the technical manual for the missiles.
    - Engage the vehicle parking brake and put the transmission in neutral.
    - Ensure the front wheels are pointed straight ahead. Tie down the steering wheel, using the securing device attached under the dashboard.
    - Connect one additional chain length to each chain on each sling set with a coupling link.
  - **Rigging.** Rig the load according to the steps in Figure 7-4.
  - **Hookup.** Two hookup teams are required for this load. The static wand person discharges the static electricity with the static wand. The forward hookup person stands on the ground forward of the vehicle and places apex fitting 1 onto the forward cargo hook. The aft hookup person stands on the ground aft of the vehicle and places apex fitting 2 onto the aft cargo hook. The hookup team then carefully dismounts the load and remains close to the load as the helicopter

removes slack from the sling legs. When successful hookup is assured, the hookup team quickly exits the area underneath the helicopter to the designated rendezvous point.

- **Derigging.** Derigging is the reverse of the preparation and rigging procedures.

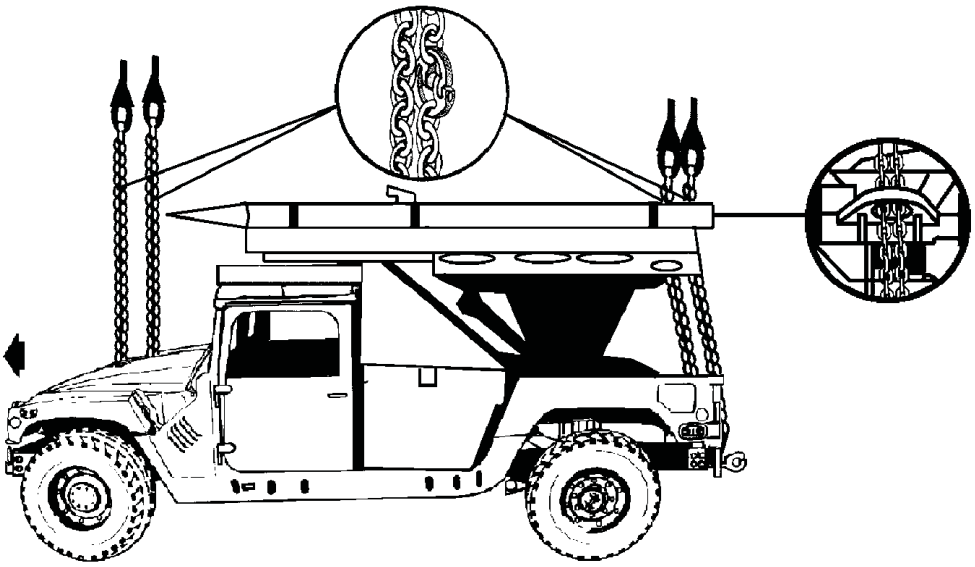

RIGGING STEPS

1. Place two sling legs on apex fitting number 1. Position apex fitting number 1 on the hood of the vehicle.

2. Loop the chain end of the left and right sling legs through their respective lift provisions that protrude through the hood of the vehicle. Place the correct link from Table 7-4 in the grab hook. Secure excess chain with tape or Type III nylon cord.

3. Place two sling legs on apex fitting number 2. Position apex fitting number 2 at the rear of the launcher unit.

4. Loop the chain end of the left and right sling legs through their respective sling guides, down through the pear shaped lift provisions located left and right of the pintle hook on the rear bumper. Route the chain back through the sling guide and place the correct link from Table 7-4 in the grab hook.

WARNING

If the CLAW is lifted with missiles on the rails, before firing either missile a complete inspection by a qualified missile officer is required.

5. Cluster and tie (breakaway technique) the sling legs in each sling set together to prevent entanglement during hookup and lift-off.

Figure 7-4. M1097A2 Truck, 1 1/4-Ton with Complementary Low Altitude Weapons System

AN/MPQ-57 AND AN/MPQ-61 HIGH-POWER ILLUMINATOR RADAR (HIPIR) PHASE II AND PHASE III MOUNTED ON THE M390 (MODIFIED) TRAILER

7-6. The AN/MPQ-57 and AN/MPQ-61 high-power illuminator radar phase II and phase III mounted on the M390 (Modified) trailer are rigged for dual-point sling load using the following procedures:

- **Applicability.** The following items in Table 7-5 are certified for the helicopter(s) listed in the following table by the US Army Natick Soldier Center:

Table 7-5. AN/MPQ-57 and AN/MPQ-61 High-Power Illuminator Radar (HIPIR) Phase II and Phase III Mounted on the M390 (Modified) Trailer

Nomenclature	*Max Weight (Pounds)*	*Sling Set*	*Link Count Front/Rear*	*Type of Aircraft*
AN/MPQ-57 High Power Illuminator Radar on M390 Trailer, Phase II	9,480	25K	25/3	CH-47
AN/MPQ-61 High Power Illuminator Radar on M390 Trailer, Phase III	9,530	25K	25/3	CH-47

- **Materials.** The following materials are required to rig this load:
  - Sling set (25,000-pound capacity) with one additional apex fitting.
  - Tape, adhesive, pressure-sensitive, 2-inch wide roll.
  - Cord, nylon, Type III, 550-pound breaking strength.
  - Webbing, cotton, 1/4-inch, 80-pound breaking strength.
  - Reach pendant (11,000- or 25,000-pound capacity) (2 each).

CAUTION

Do not mix different capacity reach pendants. Use two 11,000-pound capacity or two 25,000-pound capacity reach pendants.

- **Personnel.** Two persons can prepare and rig this load in 15 minutes.
- **Procedures.** The following procedures apply to this load:
  - **Preparation.** Prepare the load using the following steps:
    - Ensure the 3 1/4-ton shackles initially provided with the M390C trailer chassis have been replaced by 6 3/4-ton clevises (NSN 4030-00-278-0699). Ensure the clevises are properly pinned and are not damaged.
    - Prepare the HIPIR for travel according to the operator's manual and engage the parking brakes.
    - Rotate the azimuth STOW lock clockwise until the stow pin is fully engaged with the torque tube and the antenna cannot be further moved in either direction. The antenna must face the lunette end of the trailer and be tilted slightly downward toward the ground. Secure the stow pin with tape or Type III nylon cord.
    - Remove the dust covers from the radar antennas.
    - Install the VTG sensor unit dust cover, if applicable.
    - Secure all tools and equipment inside the drawers and cabinets. Secure all doors and drawers with tape or Type III nylon cord.
    - Secure all hoses, cables, and chains to the trailer chassis or surrounding structure with tape or Type III nylon cord.

- Adjust the forward and rear leveling jacks to just above ground level so the HIPIR does not flip during takeoff or landing.
- Install a reach pendant on each of the apex fittings of the sling set.

- **Rigging.** Rig the load according to the steps in Figure 7-5.
- **Hookup.** Two hookup persons are required for this load. The forward hookup person stands on the radar set group cabinet and places reach pendant 1 onto the forward cargo hook. The aft hookup person stands on the transmitter group cabinet (lunette end) and places reach pendant 2 onto the aft cargo hook. The hookup teams then carefully dismount the HIPIR and remain close to the load as the helicopter removes slack from the sling legs. When successful hookup is assured, the hookup teams quickly exit the area underneath the helicopter to the designated rendezvous point.
- **Derigging.** Derigging is the reverse of the preparation and rigging procedures.

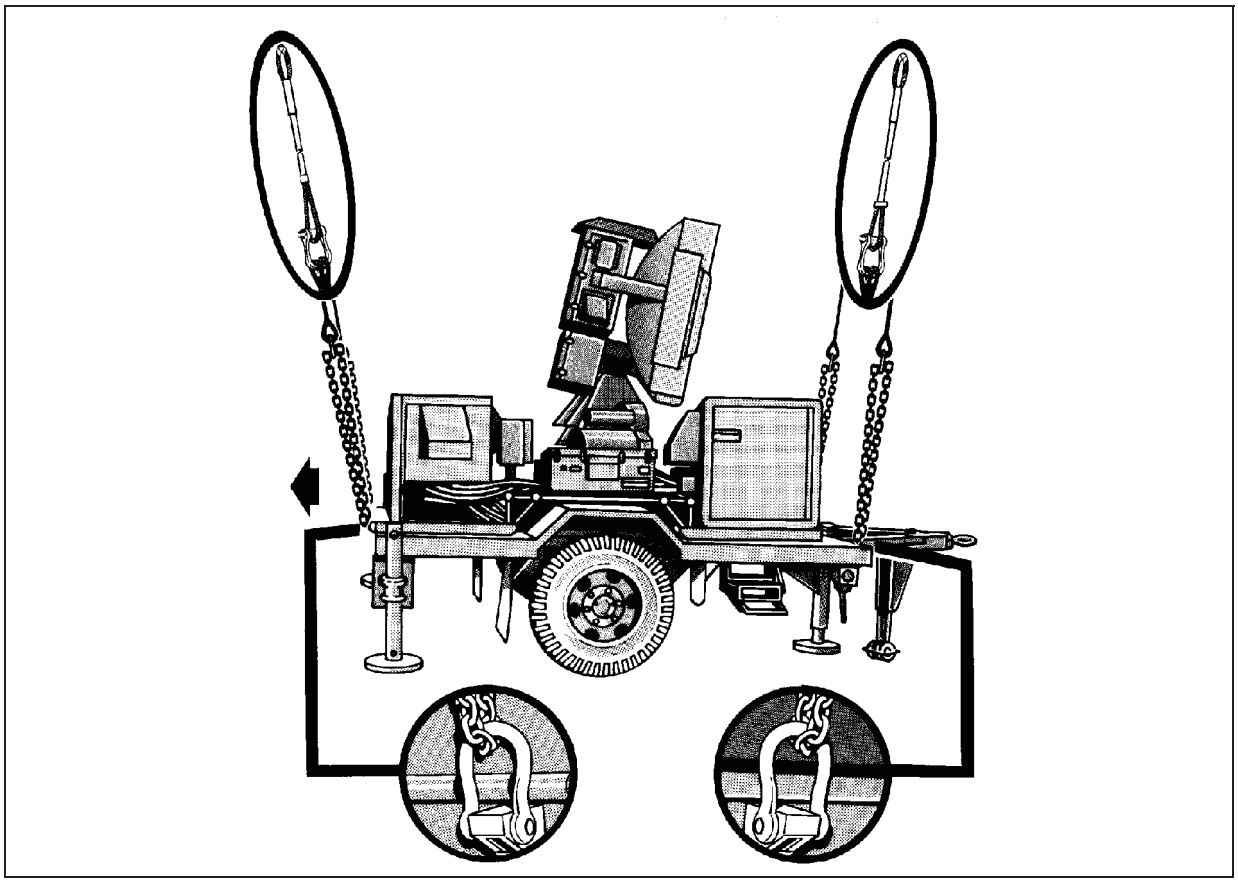

Figure 7-5. AN/MPQ-57 and AN/MPQ-61 High-Power Illuminator Radar

RIGGING STEPS
1. Place two sling legs on apex fitting number 1. Position apex fitting and reach pendant number 1 on top of the transmitter group cabinet (trailer lunette end).
2. Loop the chain end of the left and right sling legs through their respective lift provisions located on the front corners of the trailer chassis. Place the correct link from Table 7-5 in the grab hook. Secure the excess chain with tape or Type III nylon cord.
3. Pull the chain legs up and tie (breakaway technique) the grab hooks to the top of the transmitter group cabinet.
4. Place two sling legs on apex fitting number 2. Position apex fitting and reach pendant number 2 on the radar set group cabinet.
5. Loop the chain end of the left and right sling legs through their respective lift provisions located on the rear corners of the trailer chassis. Place the correct link from Table 7-5 in the grab hook.
6. Pull the chain legs up and tie (breakaway technique) the grabhooks to the top of the radar set group cabinet.
7. Cluster and tie or tape (breakaway technique) the sling legs in each sling set together to prevent entanglement during hookup and lift-off.

Figure 7-5. AN/MPQ-57 and AN/MPQ-61 High-Power Illuminator Radar (Continued)

PLATOON SUPPORT VAN/MAINTENANCE CENTER (PSV/MC)

7-7. The platoon support van/maintenance center is rigged for dual-point sling load using the following procedures:

- **Applicability.** The following items in Table 7-6 are certified for the helicopter(s) listed in the following table by the US Army Natick Soldier Center:

Table 7-6. Platoon Support Van/Maintenance Center

Nomenclature	*Max Weight (Pounds)*	*Sling Set*	*Link Count Front/Rear*	*Type of Aircraft*
Platoon Support Van/Maintenance Center, M32	14,300	25K	8/46	CH-47
Platoon Support Van M934A1/A2	14,300	25K	77/39	CH-47

- **Materials.** The following materials are required to rig this load:
  - Sling set (25,000-pound capacity) with one additional apex fitting.
  - Tape, adhesive, pressure-sensitive, 2-inch wide roll.
  - Cord, nylon, Type III, 550-pound breaking strength.
  - Webbing, cotton, 1/4-inch, 80-pound breaking strength.
- **Personnel.** Four persons can prepare and rig this load in 60 minutes.
- **Procedures.** The following procedures apply to this load:
  - **Preparation.** Prepare the load using the following steps:
    - Prepare the PSV/MC M32 van for travel according to instructions in the operator's manual.
    - Secure all loose equipment inside the shelter with tape or Type III nylon cord.

- Close and secure all doors and vents. Secure the door in the closed and locked position.

- **Rigging.** Rig the load according to the steps in Figure 7-6.
- **Hookup.** Two hookup teams are required for this load. The static wand person discharges the static electricity with the static wand. The forward hookup person stands on top of the shelter and places apex fitting number 1 onto the forward cargo hook. The aft hookup person stands on top of the shelter and places apex fitting number 2 onto the aft cargo hook. The hookup teams then carefully dismount the shelter and remain close to the load as the helicopter removes slack from the sling legs. When successful hookup is assured, the hookup teams quickly exit the area underneath the helicopter to the designated rendezvous point.
- **Derigging.** Derigging is the reverse of the preparation and rigging procedures.

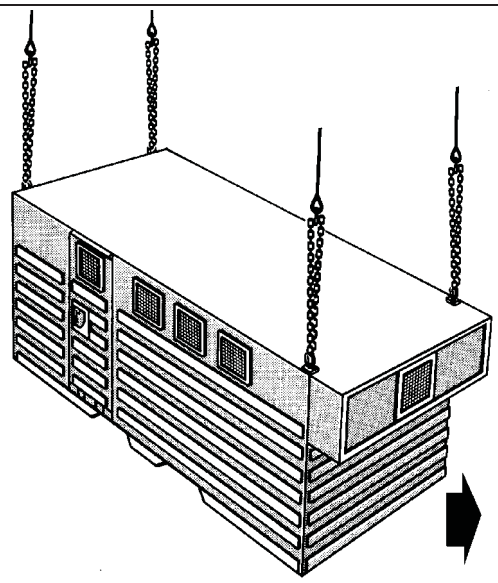

RIGGING STEPS

1. Place two sling legs on apex fitting number 1. Position apex fitting number 1 on top of the environmental control unit (ECU) end of the shelter.

2. Loop the chain end of the left and right sling legs through their respective lift provisions located on the front corners of the shelter. Place the correct link from Table 7-6 in the grab hook.

3. Place two sling legs on apex fitting number 2. Position apex fitting number 2 on top of aft end of the shelter.

4. Loop the chain end of the left and right sling legs through their respective lift provisions located on the rear corners of the shelter. Place the correct link from Table 7-6 in the grab hook. Secure the excess chain with tape or Type III nylon cord.

5. Cluster and tie (breakaway technique) the sling legs in each sling set together to prevent entanglement during hookup and lift-off.

Figure 7-6. Platoon Support Van/Maintenance Center, M32

FIELD MAINTENANCE EQUIPMENT SHOP (FME)

7-8. The field maintenance equipment shop is rigged for dual-point sling load using the following procedures:

- **Applicability.** The following items in Table 7-7 are certified for the helicopter(s) listed in the following table by the US Army Natick Soldier Center:

Table 7-7. Field Maintenance Equipment Shop

Nomenclature	*Max Weight (Pounds)*	*Sling Set*	*Link Count Front/Rear*	*Type of Aircraft*
Field Maintenance Equipment Shop 20, Electromechanical Shop	5,312	25K	75/75	CH-47
Field Maintenance Equipment Shop 23, Maintenance Repair Facility	5,341	25K	75/75	CH-47

- **Materials.** The following materials are required to rig this load:
  - Sling set (25,000-pound capacity) with one additional apex fitting.
  - Tape, adhesive, pressure-sensitive, 2-inch wide roll.
  - Cord, nylon, Type III, 550-pound breaking strength.
  - Webbing, cotton, 1/4-inch, 80-pound breaking strength.
- **Personnel.** Four persons can prepare and rig this load in 30 minutes.
- **Procedures.** The following procedures apply to this load:
  - **Preparation.** Prepare the load using the following steps:
    - Prepare the FME shop shelter for travel according to instructions in the operator's manual.
    - Secure all loose equipment inside the shelter with tape or Type III nylon cord.
    - Close and secure all doors and vents. Secure the door in the closed and locked position.
  - **Rigging.** Rig the load according to the steps in Figure 7-7.
  - **Hookup.** Two hookup teams are required for this load. The static wand person discharges the static electricity with the static wand. The forward hookup person stands on top of the shelter and places apex fitting number 1 onto the forward cargo hook. The aft hookup person stands on top of the shelter (ECU end) and places apex fitting number 2 onto the aft cargo hook. The hookup teams then carefully dismount the shelter and remain close to the load as the helicopter removes slack from the sling legs. When successful hookup is assured, the hookup teams quickly exit the area underneath the helicopter to the designated rendezvous point.
  - **Derigging.** Derigging is the reverse of the preparation and rigging procedures

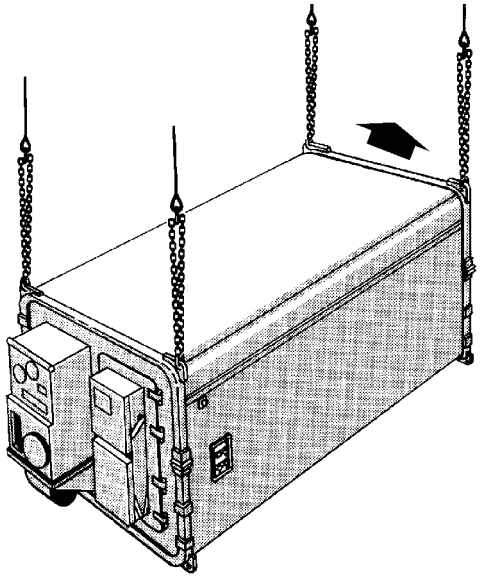

RIGGING STEPS

1. Place two sling legs on apex fitting number 1. Position apex fitting number 1 on top of the shelter, opposite the ECU end.

2. Loop the chain end of the left and right sling legs through their respective lift provisions located on the front corners of the shelter. Place the correct link from Table 7-7 in the grab hook. Secure the excess chain with tape or Type III nylon cord.

3. Place two sling legs on apex fitting number 2. Position apex fitting number 2 on top of the ECU end of the shelter.

4. Loop the chain end of the left and right sling legs through their respective lift provisions located on the rear corners of the shelter. Place the correct link from Table 7-7 in the grab hook. Secure the excess chain with tape or Type III nylon cord.

5. Cluster and tie (breakaway technique) the sling legs in each sling set together to prevent entanglement during hookup and lift-off.

Figure 7-7. Field Maintenance Equipment Shop 20, Electromechanical Shop

FIELD MAINTENANCE EQUIPMENT SHOP 21, UNMANNED SHOP, ELECTRICAL EQUIPMENT

7-9. The field maintenance equipment shop 21, unmanned shop, electrical equipment is rigged for dual-point sling load using the following procedures:

- **Applicability.** The following item in Table 7-8 is certified for the helicopter(s) listed in the following table by the US Army Natick Soldier Center:

Table 7-8. Field Maintenance Equipment Shop 21, Unmanned Shop, Electrical Equipment

Nomenclature	*Max Weight (Pounds)*	*Sling Set*	*Link Count Front/Rear*	*Type of Aircraft*
Field Maintenance Equipment Shop 21, Unmanned Shop, Electrical Equipment	5,639	25K	5/28	CH-47

- **Materials.** The following materials are required to rig this load:
  - Sling set (25,000-pound capacity) with one additional apex fitting.
  - Tape, adhesive, pressure-sensitive, 2-inch wide roll.
  - Cord, nylon, Type III, 550-pound breaking strength.
  - Webbing, cotton, 1/4-inch, 80-pound breaking strength.
- **Personnel.** Four persons can prepare and rig this load in 30 minutes.
- **Procedures.** The following procedures apply to this load:
  - **Preparation.** Prepare the load using the following steps:
    - Prepare the FME 21 shop shelter for travel according to instructions in the operator's manual.
    - Secure all loose equipment inside the shelter with tape or Type III nylon cord.
    - Close and secure all doors and vents. Secure the door in the closed and locked position.
  - **Rigging.** Rig the load according to the steps in Figure 7-8.
  - **Hookup.** Two hookup teams are required for this load. The static wand person discharges the static electricity with the static wand. The forward hookup person stands on top of the shelter and places apex fitting number 1 onto the forward cargo hook. The aft hookup person stands on top of the shelter (door end) and places apex fitting number 2 onto the aft cargo hook. The hookup teams then carefully dismount the shelter and remain close to the load as the helicopter removes slack from the sling legs. When successful hookup is assured, the hookup teams quickly exit the area underneath the helicopter to the designated rendezvous point.
  - **Derigging.** Derigging is the reverse of the preparation and rigging procedures.

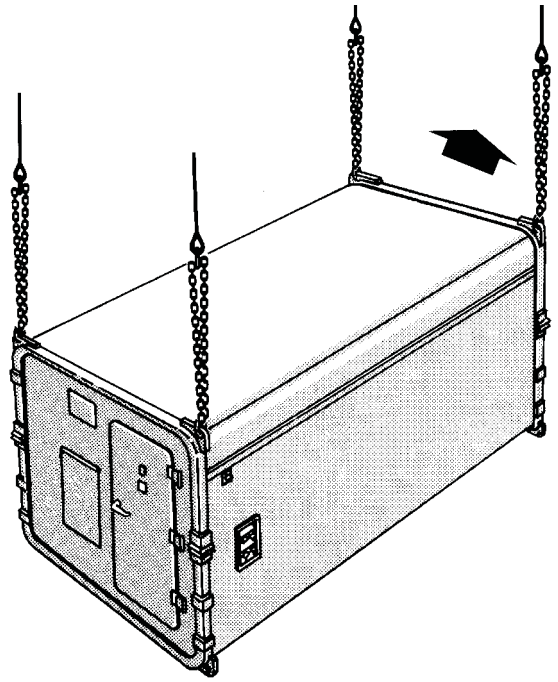

RIGGING STEPS

1. Place two sling legs on apex fitting number 1. Position apex fitting number 1 on top of the shelter, opposite the door end.

2. Loop the chain end of the left and right sling legs through their respective lift provisions located on the front corners of the shelter. Place the correct link from Table 7-8 in the grab hook.

3. Place two sling legs on apex fitting number 2. Position apex fitting number 2 on top of the door end of the shelter.

4. Loop the chain end of the left and right sling legs through their respective lift provisions located on the rear corners of the shelter. Place the correct link from Table 7-8 in the grab hook. Secure the excess chain with tape or Type III nylon cord.

5. Cluster and tie (breakaway technique) the sling legs in each sling set together to prevent entanglement during hookup and lift-off.

Figure 7-8. Field Maintenance Equipment Shop 21, Unmanned Shop, Electrical Equipment

PLATOON COMMAND POST (PCP)/BATTERY COMMAND POST (BCP)

7-10. The platoon command post/battery command post is rigged for dual-point sling load using the following procedures:

- **Applicability.** The following items in Table 7-9are certified for the helicopter(s) listed in the following table by the US Army Natick Soldier Center:

Table 7-9. Platoon Command Post / Battery Command Post

Nomenclature	*Max Weight (Pounds)*	*Sling Set*	*Link Count Front/Rear*	*Type of Aircraft*
Platoon Command Post, AN/MSW-20, Phase II, on M390C Trailer	10,244	25K	3/70	CH-47
Platoon Command Post, AN/MSW-20, Phase III, on M390C Trailer	9,300	25K	3/70	CH-47
Battery Command Post, AN/MSW-21, Phase III, on M390C Trailer	9,980	25K	3/70	CH-47

- **Materials.** The following materials are required to rig this load:
  - Sling set (25,000-pound capacity) with one additional apex fitting.
    - Additional chain length, part number 38850-00053-102, from a 25,000-pound capacity sling set (2 each).
    - Additional coupling link, part number 664-241, from a 25,000-pound capacity sling set (2 each).
  - Line, multiloop, 4-loop, 8-ply, NSN 1670-01-062-6307 (2 each).
  - Tape, adhesive, pressure-sensitive, 2-inch wide roll.
  - Cord, nylon, Type III, 550-pound breaking strength.
  - Webbing, cotton, 1/4-inch, 80-pound breaking strength.
  - Clevis assembly, NSN 4030-00-278-0699 (6 each).
  - Webbing, nylon, tubular, 1,000-pound breaking strength.

CAUTION

Do not substitute any sling equipment in place of the specified sling set or multiloop lines. The two multiloop lines and the sling set, with the additional apex fitting, chain lengths, and additional coupling links, are to be stored in the kit bag and only used for sling loading the PCP/BCP.

- **Personnel.** Two persons can prepare and rig this load in 30 minutes.
- **Procedures.** The following procedures apply to this load:
  - **Preparation.** Prepare the load using the following steps:
    - Prepare the PCP/BCP for travel according to instructions in the operator's manual.
    - Ensure the 3 1/4-ton clevises provided with the trailer chassis have been replaced with 6 3/4-ton clevises (NSN 4030-00-278-0699). Ensure the clevises are pinned and not damaged.
    - Engage the parking brakes.
    - Adjust the leveling jack pads to just above ground level. Lock into position.
    - Secure all hoses, cables, and chains to the adjacent structure with tape or Type III nylon cord.
    - Tape the towing provisions on the bottom corners of the shelter to prevent the rigging crew from routing the sling leg chain ends through the towing provisions.
    - Using 1/2-inch tubular nylon, tie the front and rear lifting rings together tightly on top of the left side of the shelter so the lifting rings are facing each other. Repeat the procedure with the top lifting rings on the right side of the shelter.

- **Rigging.** Rig the load according to the steps in Figure 7-9.
- **Hookup.** Two hookup teams are required for this load. The static wand person discharges the static electricity with the static wand. The forward hookup person stands on top of the shelter and places apex fitting number 1 onto the forward cargo hook. The aft hookup person stands on top of the shelter and places apex fitting number 2 onto the aft cargo hook. The hookup teams then carefully dismount the shelter and remain close to the load as the helicopter removes slack from the sling legs. When successful hookup is assured, the hookup teams quickly exit the area underneath the helicopter to the designated rendezvous point.
- **Derigging.** Derigging is the reverse of the preparation and rigging procedures.

Note. Do not remove the additional chain sections from sling set 1. Keep sling sets 1 and 2 intact for ease in future use. Store the 12-foot multiloop lines in the kit bag with the two sling sets.

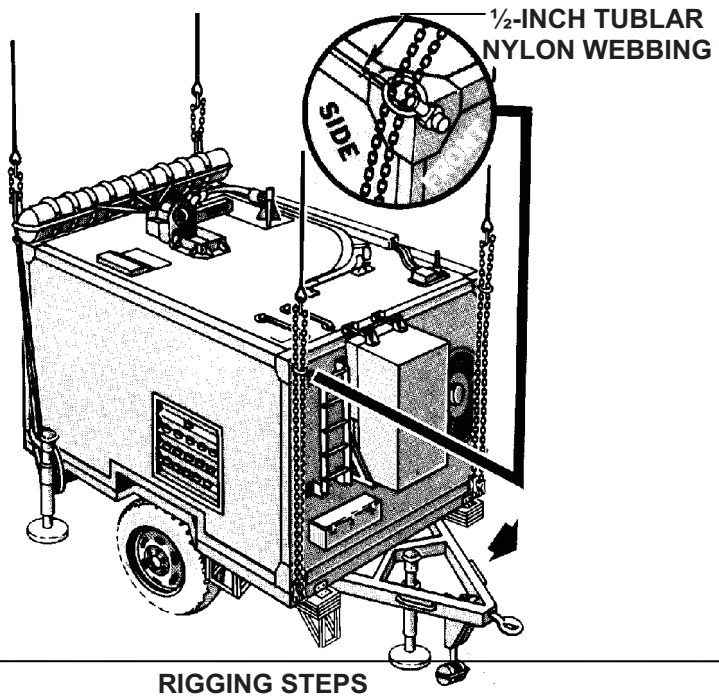

RIGGING STEPS

1. Place two sling legs on apex fitting number 1. Connect an additional chain length to each sling leg chain using the coupling links. Position apex fitting number 1 on top of the shelter on the lunette end.

2. Route the chain end of the left sling leg down through the upper lifting ring on the top left corner of the shelter, through the trailer lifting provision located on the front left corner of the trailer chassis, and back up through the upper lifting ring on the top left corner of the shelter. Place the correct link from Table 7-9 in the grab hook.

3. Repeat the above procedures using the right sling leg and the right lifting provision.

Note. Do not route the chain ends through the towing provision on the base of the shelter.

Figure 7-14. Platoon Command Post/Battery Command Post

RIGGING STEPS (Continued)
4. Choker hitch a 12-foot line around the rear left leveling jack stand on the trailer chassis. Ensure the loop of the knot is facing to the rear of the trailer. Route the free end of the 12-foot multiloop line up through the lifting ring on the top corner of the shelter. Ensure the choker hitch is tight around the jack stand and the individual plies of the multiloop line remain aligned. Tape or tie the multiloop line as necessary.
Note. Do not route the 12-foot multiloop line through the towing provision on the base of the shelter.
5. Repeat the above procedures on the right side of the shelter using the remaining 12-foot multiloop line.
6. Place two sling legs on apex fitting number 2. Position apex fitting number 2 on top of the IFF end of the shelter.
7. Loop the chain end of the left sling leg through the open loop at the free end of the 12-foot multiloop line on the left rear corner of the shelter. Place the correct link from Table 7-9 in the grab hook. Secure the excess chain with tape or Type III nylon cord.
8. Repeat the above procedure using the right multiloop line and the right sling leg.
9. Cluster and tie (breakaway technique) the sling legs in each sling set together to prevent entanglement during hookup and lift-off.

Figure 7-9. Platoon Command Post/Battery Command Post (Continued)

Chapter 8

Certified Dual-Point Rigging Procedures for Engineer Equipment

INTRODUCTION

8-1. This chapter contains rigging procedures for dual-point lift of engineer equipment loads that have been certified for sling load. Each rigging procedure is found in a paragraph that includes a description of the load, materials required for rigging, and steps to complete the procedure. An applicability paragraph is also a part of each paragraph and identifies the certified loads. The certified dual-point rigging procedures for engineer equipment loads are in this section. Paragraphs 8-2 through 8-42 give detailed instructions for rigging loads.

Note. Reach Pendants may be used on dual point loads. Place a Reach Pendant on each apex fitting. A static discharge person is not required when using a Reach Pendant.

D5B TRACTOR DOZER, SECTIONALIZED

8-2. The D5B tractor dozer, sectionalized is rigged for dual-point sling load using the following procedures:

- **Applicability.** The following items in Table 8-1 are certified for the helicopter(s) listed in the following table by the US Army Natick Soldier Center:

Table 8-1. D5B Tractor Dozer, Sectionalized

Nomenclature	*Max Weight (Pounds)*	*Sling Set*	*Link Count Front/Rear*	*Type of Aircraft*
Tractor Dozer, D5B, Power Section	18,915	25K	8/57	CH-47
Tractor Dozer, D5B, Track Section	13,735	25K	12/21	CH-47

- **Materials.** The following materials are required to rig this load:
  - Sling set (25,000-pound capacity) (2 each) with two additional apex fittings.
  - Tape, adhesive, pressure-sensitive, 2-inch wide roll.
  - Cord, nylon, Type III, 550-pound breaking strength.
  - Webbing, cotton, 1/4-inch, 80-pound breaking strength.
- **Personnel.** Four persons can sectionalize this load in 2 1/2 hours and rig each section in 15 minutes.
- **Procedures.** The following procedures apply to this load:
  - **Preparation.** Prepare the load using the following steps:
    - Sectionalize the dozer according to the operator's manual. Do not remove the winch and winch pump.
    - Remove the exhaust stack and secure it on top of the winch with Type III nylon cord.
    - Remove the pre-air cleaner and secure it on the seat with Type III nylon cord.

- Tape all lights and gages.
- Secure the seat with Type III nylon cord.
- Ensure the fuel tank is not over 3/4 full. Inspect fuel tank cap, oil filler cap, and battery caps for proper installation.

■ **Rigging.** Rig the load according to the steps in Figure 8-1.

Note. Hookup of this load presents substantial risk of damage to the load or injury to the hookup personnel. Use of a reach pendant is recommended for this load.

■ **Hookup.** Two hookup teams are required for this load. The power section hookup team stands on the top of the power section. The static wand person discharges the static electricity with the static wand. The forward hookup person stands on the driver's seat and places apex fitting 1 onto the forward cargo hook. The aft hookup person stands on the engine compartment and places apex fitting 2 onto the aft cargo hook. The track section hookup team stands on top of the track section. The static wand person discharges the static electricity with the static wand. The forward hookup person places apex fitting 1 onto the forward cargo hook. The aft hookup person places apex fitting 2 onto the aft cargo hook. The hookup teams then carefully dismount the sections and remain close to the load as the helicopter removes slack from the sling legs. When successful hookup is assured, the hookup teams quickly exit the area underneath the helicopter to the designated rendezvous point.

■ **Derigging.** Derigging is the reverse of the preparation and rigging procedures.

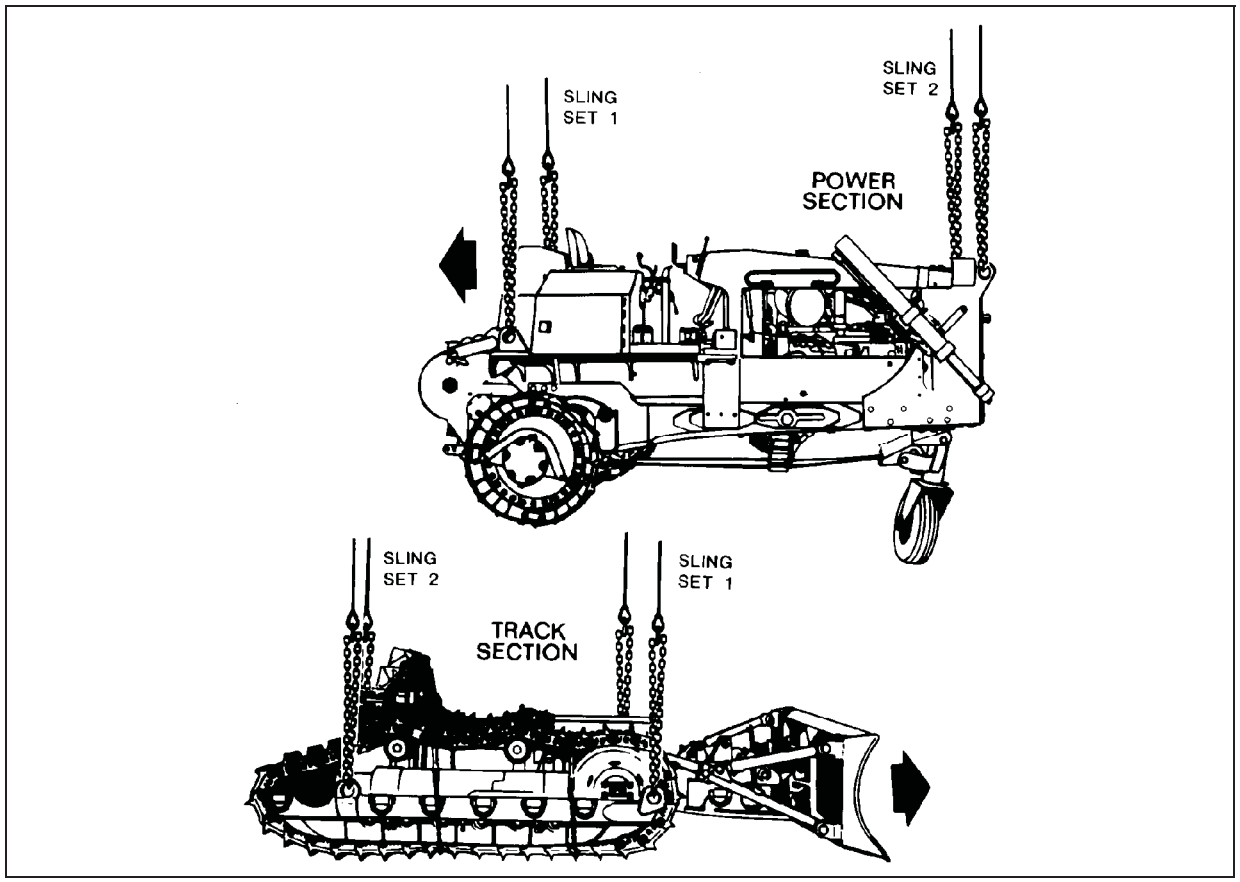

Figure 8-1. D5B Tractor Dozer, Sectionalized

RIGGING STEPS, POWER SECTION
1. Place two sling legs on apex fitting number 1. Position apex fitting number 1 on top of the fuel tank. 2. Loop the chain end of the left and right sling legs through their respective lift provisions located on each side of the fuel tank. Place the correct link from Table 8-1 in the grab hook. 3. Place two sling legs on apex fitting number 2. Position apex fitting number 2 on top of the engine compartment. 4. Loop the chain end of the left and right sling legs through their respective lift provisions located on the front corners. Place the correct link from Table 8-1 in the grab hook. Secure excess chain with tape or Type III nylon cord. 5. Cluster and tie (breakaway technique) the sling legs in each sling set together to prevent entanglement during hookup and lift-off.
RIGGING STEPS, TRACK SECTION
1. Place two sling legs on apex fitting number 1. Position apex fitting number 1 on top of the forward (blade) end. 2. Loop the chain end of the left and right sling legs through their respective lift provisions located in front of the forward wheels. Place the correct link from Table 8-1 in the grab hook. Secure excess chain with tape or Type III nylon cord. 3. Place two sling legs on apex fitting number 2. Position apex fitting number 2 on top of the rear end of the track section. 4. Loop the chain end of the left and right sling legs through their respective lift provisions located near the aft end of the track. Place the correct link from Table 8-1 in the grab hook. Secure excess chain with tape or Type III nylon cord. 5. Cluster and tie (breakaway technique) the sling legs in each sling set together to prevent entanglement during hookup and lift-off.

Figure 8-1. D5B Tractor Dozer, Sectionalized (Continued)

TRACTOR FULL TRACKED, CASE MODEL 1150

8-3. The tractor full tracked, Case model 1150 is rigged for dual-point sling load using the following procedures:

- **Applicability.** The following item in Table 8-2 is certified for the helicopter(s) listed in the following table by the US Army Natick Soldier Center:

Table 8-2. Tractor Full Tracked, Case Model 1150

Nomenclature	*Max Weight (Pounds)*	*Sling Set*	*Link Count Front/Rear*	*Type of Aircraft*
Tractor Full Tracked with Bucket, Case Model 1150	27,000	40K	8/16	CH-53

- **Materials.** The following materials are required to rig this load:
  - Sling set (40,000-pound capacity) with one additional apex fitting.
    - Additional chain length, part number 607050, from a 40,000-pound capacity sling set (4 each).
    - Additional coupling link, part number 577-0815, from a 40,000-pound sling set (4 each).
    - Tape, adhesive, pressure-sensitive, 2-inch wide roll.
    - Cord, nylon, Type III, 550-pound breaking strength.
    - Webbing, cotton, 1/4-inch, 80-pound breaking strength.
    - Felt sheet, cattle hair, Type IV, 1/2-inch or suitable padding.
- **Personnel.** Two persons can prepare and rig this load in 30 minutes.
- **Procedures.** The following procedures apply to this load:
  - **Preparation.** Prepare the load using the following steps:
    - Raise the bucket 2 to 3 feet off the ground.
    - Tape the air filter intake, the exhaust pipe opening, and all lights.
    - Ensure the winch line is completely reeled in.
    - Engage the hand brake and place the transmission in neutral.
    - Ensure the fuel tank is not over 3/4 full. Inspect fuel tank cap, oil filler cap, and battery caps for proper installation.
  - **Rigging.** Rig the load according to the steps in Figure 8-2.
  - **Hookup.** Two hookup teams are required for this load. The static discharge person discharges the static electricity. The forward hookup person stands on the engine deck and places apex fitting 1 onto the forward cargo hook. The aft hookup person stands on the roll over protection system (ROPS) and places apex fitting 2 onto the aft cargo hook. The hookup teams then carefully dismount the tractor and remain close to the load as the helicopter removes slack from the sling legs. When successful hookup is assured, the hookup teams quickly exit the area underneath the helicopter to the designated rendezvous point.
  - **Derigging.** Derigging is the reverse of the preparation and rigging procedures.

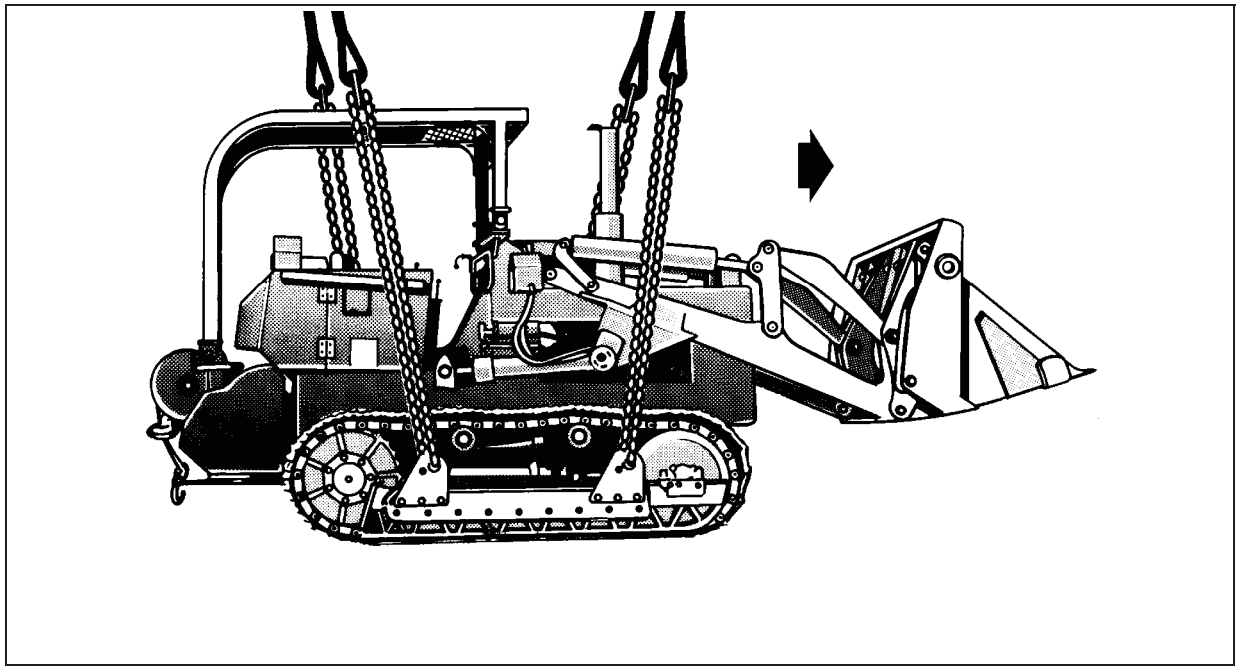

Figure 8-2. Tractor, Full-Tracked, Case Model 1150

RIGGING STEPS
Note. The additional chain section is added after each sling leg chain is looped through the lift provision because the coupling link will not fit through the opening in the lift provision. 1. Place two sling legs on apex fitting number 1. Position apex fitting number 1 on top of the engine compartment. 2. Loop the chain end of the left and right sling legs through their respective lift provisions located aft of the front idler. Using the coupling link, add the chain length to the sling leg chain. Place the correct link from Table 8-2 in the grab hook. 3. Place two sling legs on apex fitting number 2. Position apex fitting number 2 on top of the ROPS. 4. Loop the chain end of the left and right sling legs through their respective lift provisions located forward of the aft drive sprockets. Using the coupling link, add the chain length to the sling leg chain. Place the correct link from Table 8-2 in the grab hook. Secure the excess chain with tape or Type III nylon cord. 5. Pad the chains where they contact the load. 6. Cluster and tie (breakaway technique) the sling legs in each sling set together to prevent entanglement during hookup and lift-off.

Figure 8-2. Tractor, Full-Tracked, Case Model 1150 (Continued)

TRACTOR FULL TRACKED, CASE MODEL 1150E

8-4. The tractor full tracked, Case model 1150E is rigged for dual-point sling load using the following procedures:

- **Applicability.** The following item in Table 8-3 is certified for the helicopter(s) listed in the following table by the US Army Natick Soldier Center:

Table 8-3. Tractor Full Tracked, Case Model 1150E

Nomenclature	*Max Weight (Pounds)*	*Sling Set*	*Link Count Front/Rear*	*Type of Aircraft*
Tractor Full Tracked, Case Model 1150E	24,062	40K	5/50	CH-53

- **Materials.** The following materials are required to rig this load:
  - Sling set (40,000-pound capacity) with one additional apex fitting.
    - Additional chain length, part number 607050, from a 40,000-pound capacity sling set (2 each).
    - Additional coupling link, part number 577-0815, from a 40,000-pound sling set (2 each).
  - Tape, adhesive, pressure-sensitive, 2-inch wide roll.
  - Cord, nylon, Type III, 550-pound breaking strength.
  - Webbing, cotton, 1/4-inch, 80-pound breaking strength.
  - Felt sheet, cattle hair, Type IV, 1/2-inch or suitable padding.
  - Tiedown assembly, chain, MB-1 (10,000-pound capacity).
- **Personnel.** Two persons can prepare and rig this load in 30 minutes.
- **Procedures.** The following procedures apply to this load:

- **Preparation.** Prepare the load using the following steps:
  - Raise the bucket 2 to 3 feet off the ground. Secure the blade in the UP position with the MB-1 tiedown chain.
  - Twist the lights inward. Tape the exhaust pipe opening, lights, and all glass.
  - Ensure the winch line is completely reeled in.
  - Engage the hand brake and place the transmission in neutral.
  - Secure all lids, caps, and doors with tape or Type III nylon cord.
  - Ensure the fuel tank is not over 3/4 full. Inspect fuel tank cap, oil filler cap, and battery caps for proper installation.
- **Rigging.** Rig the load according to the steps in Figure 8-3.
- **Hookup.** Two hookup teams are required for this load. The static discharge person discharges the static electricity. The forward hookup person stands on the engine deck and places apex fitting 1 onto the forward cargo hook. The aft hookup person stands on the rear of the deck or on top of the cab and places apex fitting 2 onto the aft cargo hook. The hookup teams then carefully dismount the tractor and remain close to the load as the helicopter removes slack from the sling legs. When successful hookup is assured, the hookup teams quickly exit the area underneath the helicopter to the designated rendezvous point.
- **Derigging.** Derigging is the reverse of the preparation and rigging procedures.

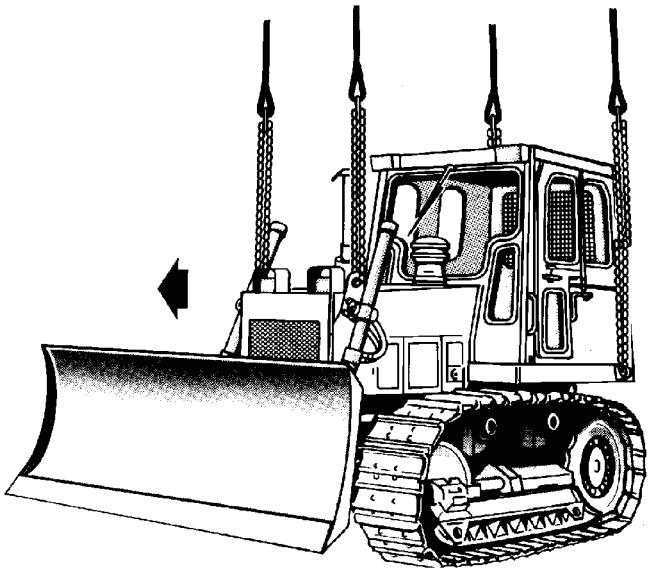

RIGGING STEPS

Note. The additional chain section is added to the aft sling leg chain after the sling leg chain is looped through the lift provision because the coupling link will not fit through the opening in the lift provision.

1. Place two sling legs on apex fitting number 1. Position apex fitting number 1 on top of the engine compartment.

Figure 8-3. Tractor, Full-Tracked, Case Model 1150E

RIGGING STEPS (Continued)
2. Loop the chain end of the left and right sling legs through their respective lift provisions located on the front end of the engine compartment. Place the correct link from Table 8-3 in the grab hook. 3. Place two sling legs on apex fitting number 2. Position apex fitting number 2 on top of the cab. 4. Loop the chain end of the left and right sling legs through their respective lift provisions located near the base of the cab. Using the coupling link, add the chain length to the sling leg chain. Place the correct link from Table 8-3 in the grab hook. Secure the excess chain with tape or Type III nylon cord. 5. Pad the chains where they contact the load. 6. Cluster and tie (breakaway technique) the sling legs in each sling set together to prevent entanglement during hookup and lift-off.

Figure 8-3. Tractor, Full-Tracked, Case Model 1150E (Continued)

TRACTOR (DOZER), FULL TRACKED, TYPE III, JD 450G

8-5. The tractor (dozer), full tracked, type III JD 450G is rigged for dual-point sling load using the following procedures:

- **Applicability.** The following items in Table 8-4 are certified for the helicopter(s) listed in the following table by the US Army Natick Soldier Center:

Table 8-4. Tractor (Dozer), Full Tracked, Type III JD 450G

Nomenclature	*Max Weight (Pounds)*	*Sling Set*	*Link Count Front/Rear*	*Type of Aircraft*
Tractor (Dozer), Full Tracked Type III JD 450G	18,300	25K	3/10	CH-47
Tractor (Dozer), Full Tracked Type III JD 450G without ROPS	17,700	25K	3/10	CH-47
Tractor (Dozer), Full Tracked Type III JD 450G without ROPS and Winch	16,160	25K	3/10	CH-47

- **Materials.** The following materials are required to rig this load:
  - Sling set (25,000-pound capacity) with one additional apex fitting.
    - Additional chain length, part number 38850-00053-102, from a 25,000-pound capacity sling set (4 each).
    - Additional coupling link, part number 664241, from a 25,000-pound sling set (4 each).
  - Tape, adhesive, pressure-sensitive, 2-inch wide roll.
  - Cord, nylon, Type III, 550-pound breaking strength.
  - Webbing, cotton, 1/4-inch, 80-pound breaking strength.
  - Heavy padding (1/4 section of a steel-belted tire or a length of fire hose or equivalent) (2 each).
- **Personnel.** Two persons can prepare and rig this load in 15 minutes.
  - **Procedures.** The following procedures apply to this load:
  - **Preparation.** Prepare the load using the following steps:

- Connect one additional chain length to each chain on each sling set with a coupling link.
- Prepare the tractor for mission needs using the operator's manual. Special tools may be required to remove the ROPS or winch.
- Tape rear sling guides on the ROPS, all lights, gages, and glass.
- Engage the hand brake and place the transmission in neutral.
- Secure all loose equipment with tape or Type III nylon cord.
- Ensure the fuel tank is not over 3/4 full. Ensure the fuel tank cap is in the vent position. Inspect the oil filter caps and battery caps for proper installation.

- **Rigging.** Rig the load according to the steps in Figure 8-4.
- **Hookup.** Two hookup teams are required for this load. The static discharge person discharges the static electricity. The forward hookup person stands on top of the dozer and places apex fitting 2 onto the forward cargo hook. The aft hookup person stands on the ROPS or aft deck and places apex fitting 1 onto the aft cargo hook. The hookup teams then carefully dismount the dozer and remain close to the load as the helicopter removes slack from the sling legs. When successful hookup is assured, the hookup teams quickly exit the area underneath the helicopter to the designated rendezvous point.
- **Derigging.** Derigging is the reverse of the preparation and rigging procedures.

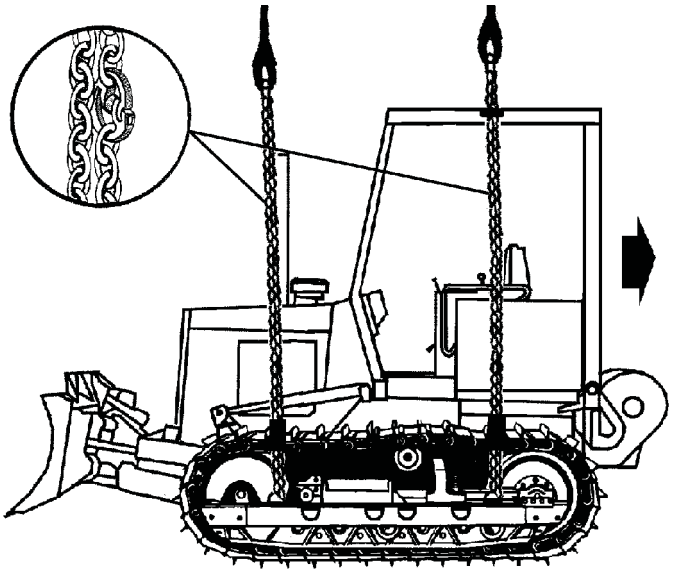

RIGGING STEPS

Note. Padding for the rear chains cannot be added until the chains have been routed through the sling guides and attached to the grab hooks.

1. Place two sling legs on apex fitting number 1. Position apex fitting number 1 on top of the engine compartment.

2. Loop the chain end of the left and right sling legs through their respective lift provisions located aft of the front idler. Place the correct link from Table 8-4 in the grab hook.

Figure 8-4. Tractor (Dozer), Full-Tracked, Type III, JD450G

RIGGING STEPS (Continued)
3. Place two sling legs on apex fitting number 2. Position apex fitting number 2 on top of the ROPS. 4. Loop the chain end of the left sling leg through the left rear sling guide on the ROPS, down through the left rear lift provision, and back up through the left rear sling guide. Place the correct link from Table 8-4 in the grab hook. Secure the excess chain with tape or Type III nylon cord. Repeat the above procedures using the right sling leg on the right side of the dozer. 5. Secure heavy padding to the slings in the area where they contact the tracks. 6. Raise the apex fittings above the dozer. Cluster and tie (breakaway technique) the sling legs in each sling set together to prevent entanglement during hookup and lift-off.

Figure 8-4. Tractor (Dozer), Full-Tracked, Type III, JD450G (Continued)

IC45 CRAWLER CARRIER

8-6. The IC45 crawler carrier is rigged for dual-point sling load using the following procedures:

- **Applicability.** The following item in Table 8-5 is certified for the helicopter(s) listed in the following table by the US Army Natick Soldier Center:

Table 8-5. IC45 Crawler Carrier

Nomenclature	*Max Weight (Pounds)*	*Sling Set*	*Link Count Front/Rear*	*Type of Aircraft*
IC45 Crawler Carrier	16,540	25K 40K	15/3 15/3	CH-47 CH-53

- **Materials.** The following materials are required to rig this load:
  - Sling set (25,000-pound capacity) with one additional apex fitting.

    OR
  - Sling set (40,000-pound capacity) with one additional apex fitting.
  - Tape, adhesive, pressure-sensitive, 2-inch wide roll.
  - Cord, nylon, Type III, 550-pound breaking strength.
  - Webbing, cotton, 1/4-inch, 80-pound breaking strength.
- **Personnel.** Two persons can prepare and rig each load in 20 minutes.
- **Procedures.** The following procedures apply to this load:
  - **Preparation.** Prepare the load using the following steps:
    - Secure all loose equipment with tape or Type III nylon cord.
    - Ensure the fuel tank is not over 3/4 full. Inspect the fuel tank cap, oil filter cap, and the battery caps for proper installation.
    - Place the transmission in neutral and engage the parking brake.
    - Secure all latches, covers, and panels with tape or type III nylon cord.
  - **Rigging.** Rig the load according to the steps in Figure 8-5.

- **Hookup.** The hookup team stands on top of the load. The static wand person discharges the static electricity with the static wand. The forward hookup person places apex fitting 1 onto the forward cargo hook. The aft hookup person places apex fitting 2 onto the aft cargo hook. The hookup team then carefully dismounts the vehicle and remains close to the load as the helicopter removes slack from the sling legs. When successful hookup is assured, the hookup team quickly exits the area underneath the helicopter to the designated rendezvous point.
- **Derigging.** Derigging is the reverse of the preparation and rigging procedures.

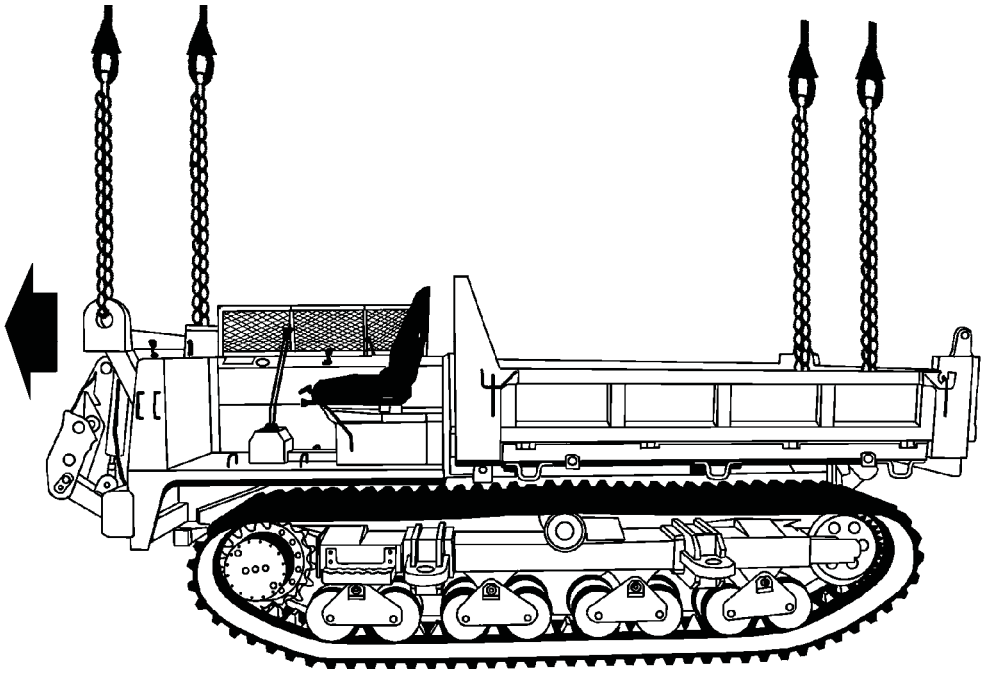

RIGGING STEPS

1. Connect two sling legs to apex fitting number 1.
2. Loop the chain end of the left and right sling legs through their respective front lift provisions located on the front of the IC45. Place the correct link from Table 8-5 in the grab hook. Secure the excess chain with Type III nylon cord.
3. Connect two sling legs to apex fitting number 2.
4. Loop the chain end of the left and right sling legs through their respective rear lift provisions located the bed of the vehicle. Place the correct link from Table 8-5 in the grab hook.
5. Cluster and tie (breakaway technique) the sling legs together on top of the ROPS to prevent entanglement during hookup and lift-off.

Figure 8-5. IC45 Crawler Carrier

TRACTOR, WHEELED, INDUSTRIAL, CASE MODEL 580

8-7. The tractor, wheeled, industrial, case model 580 is rigged for dual-point sling load using the following procedures:

- **Applicability.** The following items in Table 8-6 are certified for the helicopter(s) listed in the following table by the US Army Natick Soldier Center:

Table 8-6. Tractor, Wheeled, Industrial, Case Model 580

Nomenclature	*Max Weight (Pounds)*	*Sling Set*	*Link Count Front/Rear*	*Type of Aircraft*
Tractor, Case Model 580	10,000	15K	37/59	CH-53

- **Materials.** The following materials are required to rig this load:
  - Sling set (15,000-pound capacity) with one additional web ring.
    - Additional chain length, part number 34080-4, from a 15,000-pound capacity sling set (2 each).
    - Additional coupling link, part number 31611, from a 15,000-pound sling set (2 each).
  - Tape, adhesive, pressure-sensitive, 2-inch wide roll.
  - Cord, nylon, Type III, 550-pound breaking strength.
  - Webbing, cotton, 1/4-inch, 80-pound breaking strength.
  - Strap, cargo, tiedown, CGU-1/B (2 each).
- **Personnel.** Two persons can prepare and rig this load in 20 minutes.
- **Procedures.** The following procedures apply to this load:
  - **Preparation.** Prepare the load using the following steps:
    - Connect one additional chain length to each chain on the forward sling legs with a coupling link.
    - Raise the front bucket halfway and tilt the bucket towards the rear.
    - Position the backhoe arm with the bucket in the UP position. Secure the arm with the CGU-1/B tiedown straps to prevent swinging. Route the tiedowns from the stabilizer to the arm.
    - Engage the hand brake and place the transmission in neutral.
    - Secure all caps lids and doors with tape or Type III nylon cord. Tape all lights, gages, and glass.
    - Ensure the fuel tank is not over 3/4 full. Ensure the fuel tank cap is in the vent position. Inspect the oil filter caps and battery caps for proper installation.
  - **Rigging.** Rig the load according to the steps in Figure 8-6.
  - **Hookup.** Two hookup teams are required for this load. The static discharge person discharges the static electricity. The forward hookup person stands on top of the engine deck and places apex fitting 1 onto the forward cargo hook. The aft hookup person stands on the ROPS or aft deck and places apex fitting 2 onto the aft cargo hook. The hookup teams then carefully dismount the dozer and remain close to the load as the helicopter removes slack from the sling legs. When successful hookup is assured, the hookup teams quickly exit the area underneath the helicopter to the designated rendezvous point.
  - **Derigging.** Derigging is the reverse of the preparation and rigging procedures.

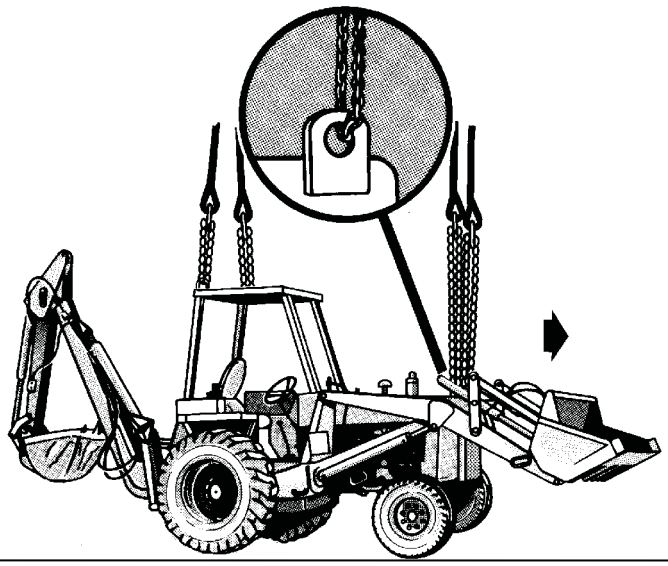

RIGGING STEPS

1. Place two sling legs on apex fitting number 1. Position apex fitting number 1 on top of the engine compartment.

2. Loop the chain end of the left and right sling legs through their respective lift provisions located on the front corners of the engine hook. Place the correct link from Table 8-6 in the grab hook. Secure the excess chain with tape or Type III nylon cord.

3. Place two sling legs on apex fitting number 2. Position apex fitting number 2 on top of the ROPS.

4. Loop the chain end of the left and right sling legs through their respective lift provisions located on the rear corners of the ROPS. Place the correct link from Table 8-6 in the grab hook. Secure the excess chain with tape or Type III nylon cord.

5. Raise the apex fittings above the tractor. Cluster and tie (breakaway technique) the sling legs in each sling set together to prevent entanglement during hookup and lift-off.

Figure 8-6. Tractor, Wheeled, Industrial, Case Model 580

420-D BACKHOE LOADER

8-8. The 420-D backhoe loader is rigged for dual-point sling load using the following procedures:

- **Applicability.** The following item in Table 8-7 is certified for the helicopter(s) listed in the following table by the US Army Natick Soldier Center:

Table 8-7. 420-D Backhoe Loader

Nomenclature	*Max Weight (Pounds)*	*Sling Set*	*Link Count Front/Rear*	*Type of Aircraft*
420-D Backhoe Loader	19,540 (AF) 18,160 (USMC)	25K 40K	15/3 3/3	CH-47 CH-53

- **Materials.** The following materials are required to rig this load:
  - Sling set (25,000-pound capacity).
    - Additional chain length, part number, 38850-00053-102, from a 25,000-pound capacity sling set (4 each).
    - Additional coupling link, part number 664241, from a 25,000-pound capacity sling set (4 each).

    OR
  - Sling set (40,000-pound capacity).
    - Additional chain length, part number, 607050, from a 40,000-pound capacity sling set (4 each).
    - Additional coupling link, part number 577-0815, from a 40,000-pound capacity sling set (4 each).
  - Tape, adhesive, pressure-sensitive, 2-inch wide roll.
  - Cord, nylon, Type III, 550-pound breaking strength.
  - Webbing, cotton, 1/4-inch, 80-pound breaking strength.
- **Personnel.** Two persons can prepare and rig each load in 20 minutes.
- **Procedures.** The following procedures apply to this load:
  - **Preparation.** Prepare the load using the following steps:
    - Secure all loose equipment in the cab with tape or Type III nylon cord.
    - Remove the exhaust stack and secure it on the floor of the cab.
    - Ensure the fuel tank is not over 3/4 full. Inspect the fuel tank cap, oil filter cap, and the battery caps for proper installation.
    - Place the transmission in neutral and engage the parking brake.
    - Secure the seat cushion with Type III nylon cord.
    - Secure all latches, covers, and panels with tape or type III nylon cord.
    - Elevate the bucket halfway and tilt the bucket to the rear. Lower the bucket to the surface. Ensure the front end loader assembly travel locks, located at the ends of both front end loader boom cylinders are properly pinned in place.
    - Tie or tape the hydraulic lines and hoses in close proximity to the front lift provisions.
    - Connect one additional chain length to each chain of the sling set with the coupling link.

- **Rigging.** Rig the load according to the steps in Figure 8-7.
- **Hookup.** The hookup team stands on top of the load. The static wand person discharges the static electricity with the static wand. The forward hookup person places apex fitting 1 onto the forward cargo hook. The aft hookup person places apex fitting 2 onto the aft cargo hook. The hookup team then carefully dismounts the vehicle and remains close to the load as the helicopter removes slack from the sling legs. When successful hookup is assured, the hookup team quickly exits the area underneath the helicopter to the designated rendezvous point.
- **Derigging.** Derigging is the reverse of the preparation and rigging procedures.

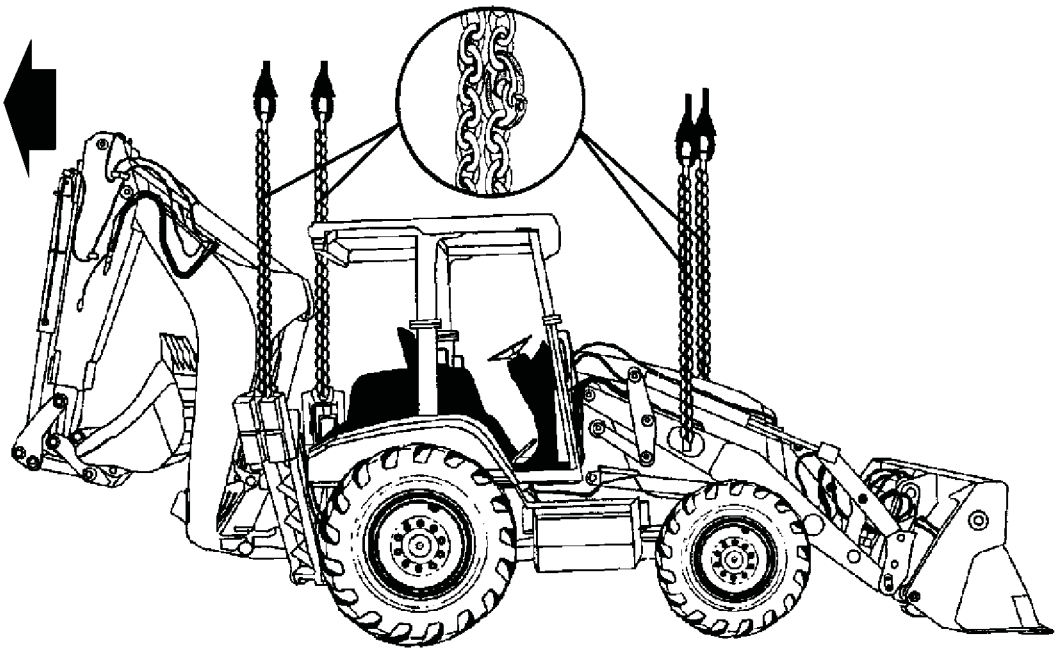

RIGGING STEPS

1. Connect two sling legs to apex fitting number 1.
2. Loop the chain end of the left and right sling legs through their respective front lift provisions located on the bucket arms. Place the correct link from Table 8-7 in the grab hook. Secure the excess chain with Type III nylon cord.
3. Connect two sling legs to apex fitting number 2
4. Loop the chain end of the left and right sling legs through their respective rear lift provisions located on the balance support arms. Place the correct link from Table 8-7 in the grab hook.
5. Cluster and tie (breakaway technique) the sling legs together on top of the ROPS to prevent entanglement during hookup and lift-off.

Figure 8-7. 420-D Backhoe Loader

SMALL EMPLACEMENT EXCAVATOR (SEE)

8-9. The small emplacement excavator is rigged for dual-point sling load using the following procedures:

- **Applicability.** The following item in Table 8-8 is certified for the helicopter(s) listed in the following table by the US Army Natick Soldier Center:

Table 8-8. Small Emplacement Excavator

Nomenclature	*Max Weight (Pounds)*	*Sling Set*	*Link Count Front/Rear*	*Type of Aircraft*
Small Emplacement Excavator	16,240 16,240	25K 40K	Listed in Rigging Steps	CH-47 CH-53

- **Materials.** The following materials are required to rig this load:
  - Sling set (25,000-pound capacity) with one additional apex fitting.

    OR
  - Sling set (40,000-pound capacity) with one additional apex fitting.
  - Tape, adhesive, pressure-sensitive, 2-inch wide roll.
  - Cord, nylon, Type III, 550-pound breaking strength.
  - Webbing, cotton, 1/4-inch, 80-pound breaking strength.
  - Felt sheet, cattle hair, Type IV, 1/2-inch or suitable padding.
- **Personnel.** Two persons can prepare and rig this load in 30 minutes.
- **Procedures.** The following procedures apply to this load:
  - **Preparation.** Prepare the load using the following steps:
    - Elevate the bucket halfway and tilt toward the rear. Ensure that the front end loader assembly travel locks located at the end of both front end loader boom cylinders are properly pinned in place.
    - Secure the steering wheel, doors, and all loose equipment with tape or Type III nylon cord.
    - Remove the pre-air cleaner and secure it on the seat with Type III nylon cord.
    - Tape the exhaust pipe opening, all lights, and glass.
    - Fold side mirrors inboard and tie together with Type III nylon cord. Tape the windshield wipers to the windshield and secure the engine compartment hood with tape or Type III nylon cord.
    - Engage the hand brake and place the transmission in neutral.
    - Secure all hydraulic lines with tape or Type III nylon cord.
    - Ensure the fuel tank is not over 3/4 full. Inspect fuel tank cap, oil filler cap, and battery caps for proper installation.
  - **Rigging.** Rig the load according to the steps in Figure 8-8.
  - **Hookup.** Two hookup teams are required for this load. The static wand person discharges the static electricity with the static wand. The forward hookup person stands on top of the falling object protection system (FOPS) and places apex fitting 2 onto the forward cargo hook. The aft hookup person stands on top of the FOPS and places apex fitting 1 onto the aft cargo hook. The hookup teams then carefully dismount the sections and remain close to the load as the helicopter removes slack from the sling legs. When successful hookup is assured, the hookup teams quickly exit the area underneath the helicopter to the designated rendezvous point.
  - **Derigging.** Derigging is the reverse of the preparation and rigging procedures.

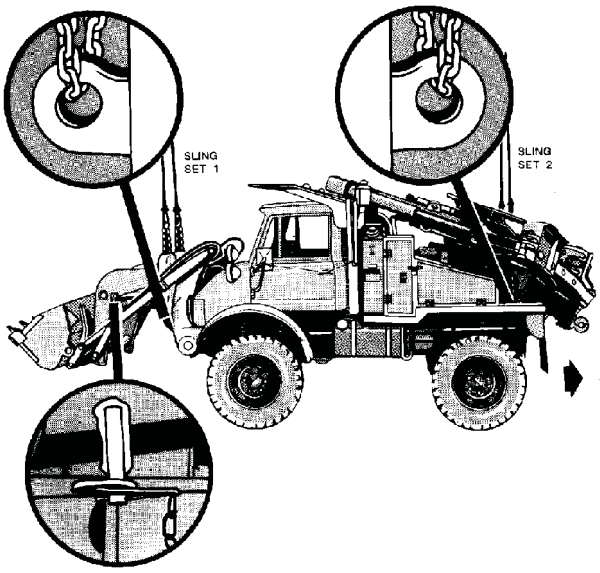

RIGGING STEPS

Note. Use the conversion chart in Appendix B for 40,000-pound capacity sling set link counts.

1. Place two sling legs on apex fitting number 1. Position apex fitting number 1 on forward end of the FOPS.

2. Loop the chain end of the left and right sling legs through their respective lift provisions located on the front bumper inboard of the front end loader support arms. Place link 3 in the grab hook.

3. Place two sling legs on apex fitting number 2. Position apex fitting number 2 on top of the aft end of the FOPS.

4. Loop the chain end of the left sling leg through the left lift provision (closest to the operator's seat) located at the top left between the left rear wheel and frame. Place link 5 in the grab hook.

5. Loop the chain end of the right sling leg through the right lift provision (closest to the backhoe bucket) located at the top right between the right rear wheel and frame. Place link 10 in the grab hook. Secure the excess chain with tape or Type III nylon cord.

6. Pad the chains where they contact the load.

7. Raise the apex fittings above the tractor. Cluster and tie (breakaway technique) the sling legs in each sling set together to prevent entanglement during hookup and lift-off.

Figure 8-8. Small Emplacement Excavator

HIGH MOBILITY MATERIEL HANDLER (HMMH)

8-10. The high mobility materiel handler is rigged for dual-point sling load using the following procedures:

- **Applicability.** The following item in Table 8-9 is certified for the helicopter(s) listed in the following table by the US Army Natick Soldier Center:

Table 8-9. High Mobility Materiel Handler

Nomenclature	*Max Weight (Pounds)*	*Sling Set*	*Link Count Front/Rear*	*Type of Aircraft*
High Mobility Materiel Handler	15,650	25K	3/56	CH-47

- **Materials.** The following materials are required to rig this load:
  - Sling set (25,000-pound capacity) with one additional apex fitting.
  - Tape, adhesive, pressure-sensitive, 2-inch wide roll.
  - Cord, nylon, Type III, 550-pound breaking strength.
  - Webbing, cotton, 1/4-inch, 80-pound breaking strength.
  - Felt sheet, cattle hair, Type IV, 1/2-inch or suitable padding.
- **Personnel.** Two persons can prepare and rig this load in 30 minutes.
- **Procedures.** The following procedures apply to this load:
  - **Preparation.** Prepare the load using the following steps:
    - Ensure all travel locks are pinned in place.
    - Secure the steering wheel, doors, and all loose equipment with tape or Type III nylon cord.
    - Fold side mirrors inboard and tie together with Type III nylon cord. Tape the windshield wipers to the windshield and secure the engine compartment hood with tape or Type III nylon cord.
    - Engage the hand brake and place the transmission in neutral.
    - Secure all hydraulic lines with tape or Type III nylon cord.
    - Ensure the fuel tank is not over 3/4 full. Inspect fuel tank cap, oil filler cap, and battery caps for proper installation.
  - **Rigging.** Rig the load according to the steps in Figure 8-9.
  - **Hookup.** Two hookup teams are required for this load. The static wand person discharges the static electricity with the static wand. The forward hookup person stands on top of the FOPS and places apex fitting 1 onto the forward cargo hook. The aft hookup person stands on top of the FOPS and places apex fitting 2 onto the aft cargo hook. The hookup teams then carefully dismount the sections and remain close to the load as the helicopter removes slack from the sling legs. When successful hookup is assured, the hookup teams quickly exit the area underneath the helicopter to the designated rendezvous point.
  - **Derigging.** Derigging is the reverse of the preparation and rigging procedures.

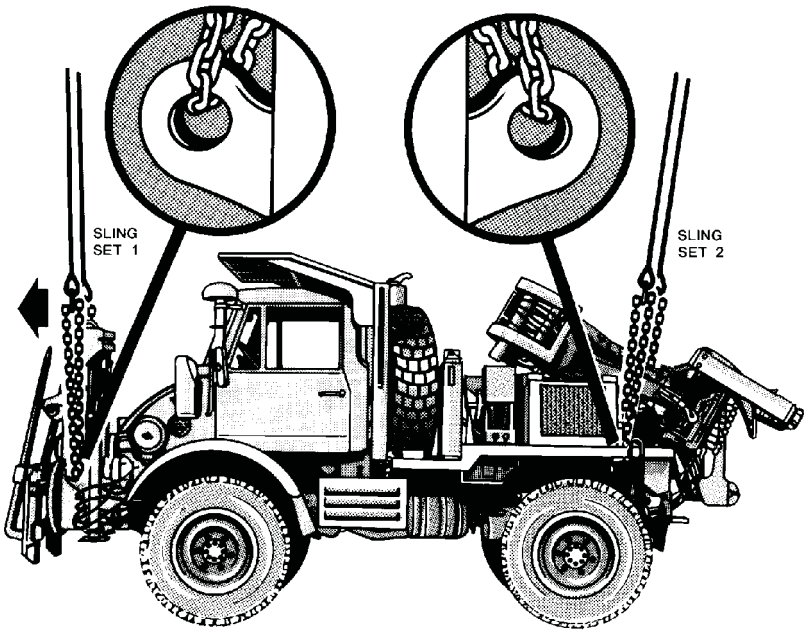

RIGGING STEPS

1. Place two sling legs on apex fitting number 1. Position apex fitting number 1 on forward end of the FOPS.

2. Loop the chain end of the left and right sling legs through their respective lift provisions located near the front bumper outboard of the forklift frame. Place the correct link from Table 8-9 in the grab hook.

3. Place two sling legs on apex fitting number 2. Position apex fitting number 2 on top of the aft end of the FOPS.

4. Loop the chain end of the left and right sling legs through their respective lift provisions located on the frame inboard of the rear wheels. Place the correct link from Table 8-9 in the grab hook. Secure the excess chain with tape or Type III nylon cord.

5. Pad the chains where they contact the load. Position the aft sling legs at their contact point with the crane boom and tie (breakaway technique).

6. Raise the apex fittings above the tractor. Cluster and tie (breakaway technique) the sling legs in each sling set together to prevent entanglement during hookup and lift-off.

Figure 8-9. High Mobility Materiel Handler

950BS SCOOP LOADER, SECTIONALIZED

8-11. The 950BS scoop loader, sectionalized is rigged for dual-point sling load using the following procedures:

- **Applicability.** The following items in Table 8-10 are certified for the helicopter(s) listed in the following table by the US Army Natick Soldier Center:

Table 8-10. 950BS Scoop Loader, Sectionalized

Nomenclature	*Max Weight (Pounds)*	*Sling Set*	*Link Count Front/Rear*	*Type of Aircraft*
950BS Scoop Loader, Work Section	15,830	25K	55/3	CH-47
950BS Scoop Loader, Power Section	16,110	25K	10/20	CH-47

- **Materials.** The following materials are required to rig this load:
  - Sling set (25,000-pound capacity) (2 each) with two additional apex fittings.
    - Additional chain length, part number 38850-00053-102 from a 25,000-pound capacity sling set (2 each).
    - Additional coupling link, part number 664241, from a 25,000-pound sling set (2 each).
  - Tape, adhesive, pressure-sensitive, 2-inch wide roll.
  - Cord, nylon, Type III, 550-pound breaking strength.
  - Webbing, cotton, 1/4-inch, 80-pound breaking strength.
  - Tiedown assembly, 15-foot dacron (2 each).
  - Tiedown assembly, chain, MB-1 (10,000-pound capacity) (2 each).
- **Personnel.** Four persons can sectionalize the scoop loader in 2.5 hours. Two persons can prepare and rig this load in 20 minutes per section.
- **Procedures.** The following procedures apply to this load:
  - **Preparation.** Prepare the load using the following steps:
    - Sectionalize the scoop loader according to the instructions in the operator's manual.
    - Secure the bucket lift arm assembly to the work section housing with two MB-1 chain tiedown assemblies. Pass a chain around the left side of the bucket control group arm cross tube, through the lift point on the housing, and secure the running ends with an MB-1 tensioning device. Repeat this procedure on the right side of the cross tube.

> **CAUTION**
>
> The chains must be tight to prevent sagging of the hydraulic system during flight.

    - Cover all hitch pins and pivot holes with plastic and tape to prevent contamination by dust and dirt on both sections.
    - Tape all lights.
    - Secure tool basket lid, located in the bucket, with Type III nylon cord.
    - Secure all power section hoses and cables located on the front of the section with Type III nylon cord.
    - Secure the floating axle in level position with two 15-foot dacron tiedown assemblies. On the left side, pass the running end of a tiedown strap down through the tiedown provision aft of the axle, under the axle, and up through the tiedown provision forward of the axle. Secure the running ends of the strap using a D-ring and load binder on top

of the axle. Repeat this procedure on the right side. Fold and secure excess webbing and load binder with cotton webbing or tape.

- Install the low velocity airdrop suspension provisions on the left and right sides of the operator's platform (these provisions are used as forward lift provisions for sling load). Torque the mounting bolts to 640 + 80 foot-pounds.
- Remove the exhaust stack and stow on the component tray mounted in the work section bucket. Cover the opening of the exhaust stack with tape.
- Remove the pre-air cleaner and pad. Stow the pre-air cleaner in the stowage compartment located behind the operator's seat. Cover the opening of the pre-air cleaner with tape.
- Fold the back of the operator seat down and secure in place with Type III nylon cord. Secure the seat belt over the seat back.
- Tape all lights and gages.
- Secure all doors and covers with tape or Type III nylon cord.
- Place controls in neutral and release brakes.
- Ensure the fuel tank is not over 3/4 full. Inspect fuel tank cap, oil filler cap, and battery caps for proper installation.

- **Rigging.** Rig the load according to the steps in Figure 8-10.
- **Hookup.** Two hookup teams are required for each section. The static discharge person discharges the static electricity. The work station hookup team stands on the left and right fenders. The static discharge person discharges the static electricity. The forward hookup person places apex fitting 1 onto the forward cargo hook. The aircraft must then move forward in order to hookup apex fitting number two. The aft hookup person places apex fitting 2 onto the aft cargo hook. The power station hookup team stands on the operator's platform and engine hood. The static discharge person discharges the static electricity. The forward hookup person places apex fitting 1 onto the forward cargo hook. The aft hookup person places apex fitting 2 onto the aft cargo hook. The hookup teams then carefully dismount the sections and remain close to the load as the helicopter removes slack from the sling legs. When successful hookup is assured, the hookup teams quickly exit the area underneath the helicopter to the designated rendezvous point.
- **Derigging.** Derigging is the reverse of the preparation and rigging procedures.

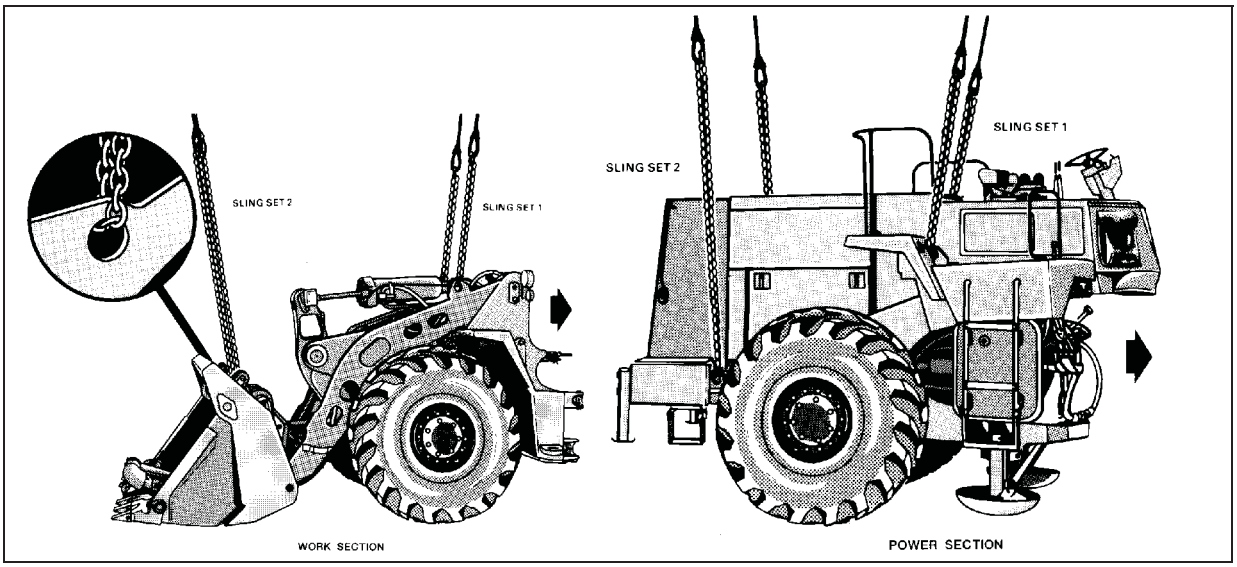

Figure 8-10. 950BS Scoop Loader, Sectionalized

RIGGING STEPS WORK SECTION
1. Place two sling legs on apex fitting number 1. Position apex fitting number 1 on top of the aft end of the work section (opposite the bucket end). 2. Loop the chain end of the left and right sling legs through their respective lift provisions located on top of the bucket lift arms. Place the correct link from Table 8-10 in the grab hook. Secure the excess chain with tape or Type III nylon cord. 3. Place two sling legs on apex fitting number 2. Position apex fitting number 2 on top of the bucket. 4. Loop the chain end of the left and right sling legs through their respective lift provisions located on the rear of the bucket. Place the correct link from Table 8-10 in the grab hook. 5. Raise the apex fittings above the load. Cluster and tie (breakaway technique) the sling legs in each sling set together to prevent entanglement during hookup and lift-off.
RIGGING STEPS POWER SECTION
1. Place two sling legs on apex fitting number 1. Position apex fitting number 1 on top of the power section immediately behind the operator's seat. 2. Loop the chain end of the left and right sling legs through their respective lift provisions located on the operator's platform. Place the correct link from Table 8-10 in the grab hook. Secure the excess chain with tape or Type III nylon cord. 3. Place two sling legs on apex fitting number 2. Using the coupling links add an additional chain length to each sling leg chain. Position apex fitting number 2 on top of the engine deck. 4. Loop the chain end of the left and right sling legs through their respective lift provisions located on the forward end of the battery box. Place the correct link from Table 8-10 in the grab hook. Secure the excess chain with tape or Type III nylon cord. 5. Raise the apex fittings above the load. Cluster and tie (breakaway technique) the sling legs in each sling set together to prevent entanglement during hookup and lift-off.

Figure 8-10. 950BS Scoop Loader, Sectionalized (Continued)

130GS GRADER, SECTIONALIZED

8-12. The 130GS grader, sectionalized is rigged for dual-point sling load using the following procedures:

- **Applicability.** The following items in Table 8-11 are certified for the helicopter(s) listed in the following table by the US Army Natick Soldier Center:

Table 8-11. 130GS Grader, Sectionalized

Nomenclature	*Max Weight (Pounds)*	*Sling Set*	*Link Count Front/Rear*	*Type of Aircraft*
130GS Grader, Front Section with Scarifier and ROPS and Low-Velocity Airdrop (LVAD) Suspension Provisions Removed	16,120	25K	3/77	CH-47
130 GS Grader, Rear Section	14,270	25K	36/56	CH-47

- **Materials.** The following materials are required to rig this load:
  - Sling set (25,000-pound capacity) (2 each) with two additional apex fittings.
  - Tape, adhesive, pressure-sensitive, 2-inch wide roll.
  - Cord, nylon, Type III, 550-pound breaking strength.
  - Webbing, cotton, 1/4-inch, 80-pound breaking strength.
  - Felt sheet, cattle hair, Type IV, 1/2-inch or suitable padding
  - Strap, cargo, tiedown (as required).
  - Plastic bags.
- **Personnel.** Two persons can prepare and rig each section in 20 minutes after removing the ROPS and LVAD suspension provision and sectionalizing the grader.
- **Procedures.** The following procedures apply to this load:
  - **Preparation.** Prepare the load using the following steps:
    - Sectionalize the grader according to the instructions in the operator's manual.
    - Remove the ROPS and LVAD suspension provisions mounted on the front bolster.
    - Ensure the fuel tank is not over 3/4 full. Inspect fuel tank cap, oil filler cap, and battery caps for proper installation.
    - On the front section use CGU-1/B tiedown straps to secure each side of the front axle to front tiedown points.
    - Loosen the front headlight bar, rotate 180 degrees, and retighten. Pad headlights with padding and tape.
    - Tape the work light on the front end of the operator's platform.
    - Secure the steering wheel to the horizontal control bar on both sides with Type III nylon cord.
    - Secure the seat with Type III nylon cord.
    - Cover all pivot points in the articulated hitch group with plastic bags and tape.
    - On the rear section, cover all pivot points in the articulated hitch group with plastic bags and tape.
    - Remove the throttle handle and place in the toolbox.
    - Tape all lights and gages.
    - Pad the instrument panel with padding and tape.
    - Remove the exhaust stack and air cleaner and secure to the top rails with Type III nylon cord.
    - Pad and tape the rear working lights and taillights.
    - Secure the doors closed with Type III nylon cord.
  - **Rigging.** Rig the load according to the steps in Figure 8-11.

- **Hookup.** Two hookup teams are required for each section. The static discharge person discharges the static electricity. The front section hookup team stands on top of the front section. The forward hookup person places apex fitting 1 onto the forward cargo hook. The aft hookup person places apex fitting 2 onto the aft cargo hook. The rear section hookup team stands on top of the engine compartment. The forward hookup person places apex fitting 1 onto the forward cargo hook. The aft hookup person places apex fitting 2 onto the aft cargo hook. The hookup teams then carefully dismount the sections and remain close to the load as the helicopter removes slack from the sling legs. When successful hookup is assured, the hookup teams quickly exit the area underneath the helicopter to the designated rendezvous point.
- **Derigging.** Derigging is the reverse of the preparation and rigging procedures.

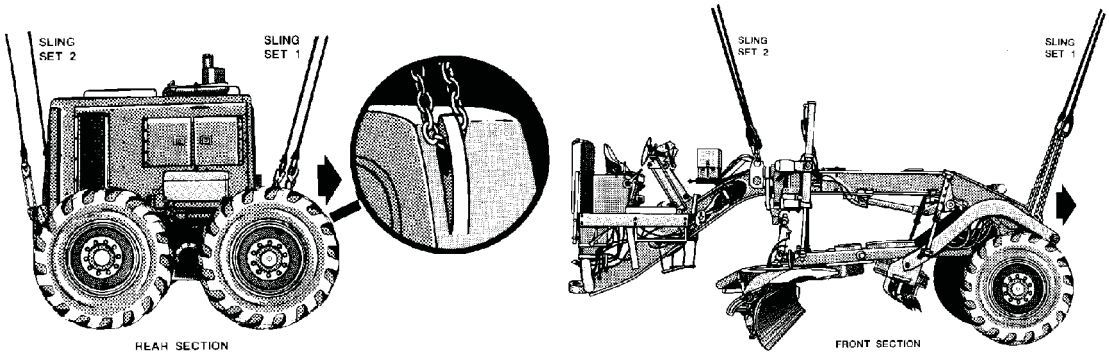

RIGGING STEPS FRONT SECTION

1. Place two sling legs on apex fitting number 1. Position apex fitting number 1 on top of the front wheels.

2. Loop the chain end of the left and right sling legs through their respective lift provisions. Place the correct link from Table 8-11 in the grab hook.

3. Place two sling legs on apex fitting number 2. Position apex fitting number 2 on top of the front section above the blade.

4. Loop the chain end of the left and right sling legs through their respective lift provisions. Place the correct link from Table 8-11 in the grab hook. Secure the excess chain with tape or Type III nylon cord.

5. Raise the apex fittings above the load. Cluster and tie (breakaway technique) the sling legs in each sling set together to prevent entanglement during hookup and lift-off.

Figure 8-11. 130GS Grader, Sectionalized

RIGGING STEPS REAR SECTION
1. Place two sling legs on apex fitting number 1. Position apex fitting number 1 in front of the forward set of wheels. 2. Loop the chain end of the left and right sling legs through their respective lift provisions located inboard of the forward wheels. Place the correct link from Table 8-11 in the grab hook. Secure the excess chain with tape or Type III nylon cord. 3. Place two sling legs on apex fitting number 2. Position apex fitting number 2 behind the rear set of wheels. 4. Loop the chain end of the left and right sling legs through their respective lift provisions. Place the correct link from Table 8-11 in the grab hook. Secure the excess chain with tape or Type III nylon cord. 5. Raise the apex fittings above the load. Cluster and tie (breakaway technique) the sling legs in each sling set together to prevent entanglement during hookup and lift-off.

Figure 8-11. 130GS Grader, Sectionalized (Continued)

613BS SCRAPER, ELEVATING, SECTIONALIZED

8-13. The 613BS scraper, elevating, sectionalized is rigged for dual-point sling load using the following procedures:

- **Applicability.** The following item in Table 8-12 is certified for the helicopter(s) listed in the following table by the US Army Natick Soldier Center:

Table 8-12. 613BS Scraper, Elevating, Sectionalized

Nomenclature	*Max Weight (Pounds)*	*Sling Set*	*Link Count Front/Rear*	*Type of Aircraft*
613BS Scraper, Elevating, Sectionalized	16,330	25K	40/15	CH-47

Note. The scraper power section is not certified as a dual point load because of the suspension point configuration.

- **Materials.** The following materials are required to rig this load:
  - Sling set (25,000-pound capacity) with one additional apex fitting.
  - Tape, adhesive, pressure-sensitive, 2-inch wide roll.
  - Cord, nylon, Type III, 550-pound breaking strength.
  - Webbing, cotton, 1/4-inch, 80-pound breaking strength.
  - Plastic bags (4 each).
- **Personnel.** Four persons can sectionalize the scraper in one hour. Two persons can prepare and rig this load in 20 minutes.
- **Procedures.** The following procedures apply to this load:
  - **Preparation.** Prepare the load using the following steps:
    - Sectionalize the scraper according to the instructions in the operator's manual.
    - Stow elevator motor hoses and hanger arms on elevator flights in the bowl, and secure with Type III nylon cord.
    - Secure hydraulic cylinders up in the stowed position with doubled Type III nylon cord.

- Fold and secure the step located on the outside of the bowl.
- Fold and secure all hoses and wires with Type III nylon cord.
- Tape all lights.
- Secure the toolbox lid with Type III nylon cord.
- Cover all hitch pin and pin holes with plastic bags and tape.

- **Rigging.** Rig the load according to the steps in Figure 8-12.
- **Hookup.** Two hookup teams are required for this load. The static discharge person discharges the static electricity. The forward hookup person stands forward of the rock guard and places apex fitting 1 (bumper end) onto the forward cargo hook. The aft hookup person places apex fitting 2 onto the aft cargo hook. The hookup teams then carefully dismount the sections and remain close to the load as the helicopter removes slack from the sling legs. When successful hookup is assured, the hookup teams quickly exit the area underneath the helicopter to the designated rendezvous point.
- **Derigging.** Derigging is the reverse of the preparation and rigging procedures.

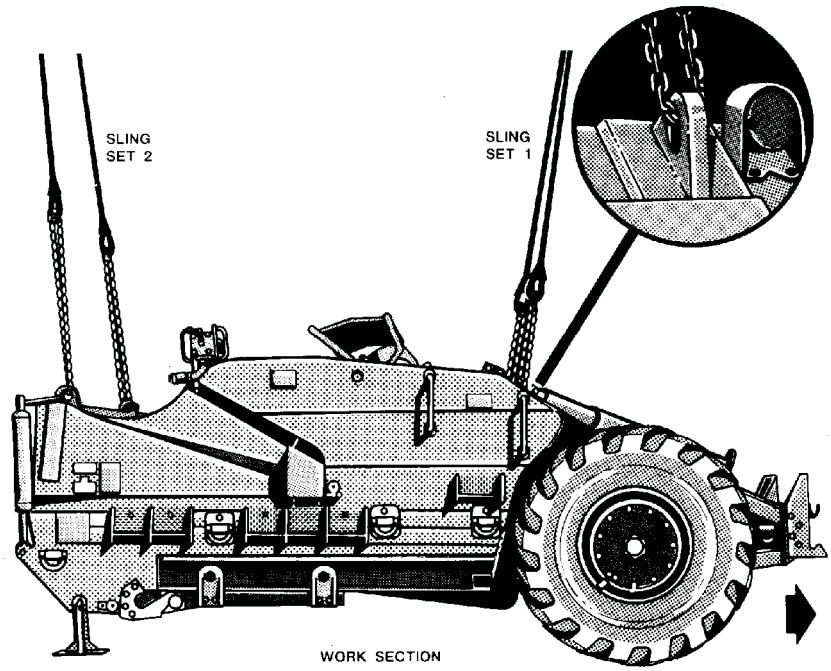

RIGGING STEPS

1. Place two sling legs on apex fitting number 1. Position apex fitting number 1 on the aft end of the rock guard, near the wheels.

2. Loop the chain end of the left and right sling legs through their respective lift provisions located on the aft deck near the wheels. Place the correct link from Table 8-12 in the grab hook. Secure the excess chain with tape or Type III nylon cord.

3. Pull and tie (breakaway technique) the two sling legs to the rock guard.

4. Place two sling legs on apex fitting number 2. Position apex fitting number 2 on top of the rock guard.

Figure 8-12. 613BS Scraper, Elevating, Sectionalized

RIGGING STEPS (Continued)
5. Loop the chain end of the left and right sling legs through their respective lift provisions located on the front end of the bowl. Place the correct link from Table 8-12 in the grab hook. Secure the excess chain with tape or Type III nylon cord. 6. Pull and tie (breakaway technique) the two sling legs to the rock guard. 7. Raise the apex fittings above the load. Cluster and tie (breakaway technique) the sling legs in each sling set together to prevent entanglement during hookup and lift-off.

Figure 8-12. 613BS Scraper, Elevating, Sectionalized (Continued)

613WDS WATER DISTRIBUTOR, SECTIONALIZED

8-14. The 613WDS water distributor, sectionalized is rigged for dual-point sling load using the following procedures:

- **Applicability.** The following item in Table 8-13 is certified for the helicopter(s) listed in the following table by the US Army Natick Soldier Center:

Table 8-13. 613WDS Water Distributor, Sectionalized

Nomenclature	*Max Weight (Pounds)*	*Sling Set*	*Link Count Front/Rear*	*Type of Aircraft*
613WDS Water Distributor, Work Section	15,400	25K	30/45	CH-47

Note. The distributor power section is not certified as a dual point load because of the suspension point configuration.

- **Materials.** The following materials are required to rig this load:
  - Sling set (25,000-pound capacity) with one additional apex fitting.
  - Tape, adhesive, pressure-sensitive, 2-inch wide roll.
  - Cord, nylon, Type III, 550-pound breaking strength.
  - Webbing, cotton, 1/4-inch, 80-pound breaking strength.
  - Plastic bags (4 each).
- **Personnel.** Four persons can sectionalize the scraper in one hour. Two persons can prepare and rig this load in 20 minutes.
- **Procedures.** The following procedures apply to this load:
  - **Preparation.** Prepare the load using the following steps:
    - Sectionalize the distributor according to the instructions in the operator's manual.
    - Secure the distribution control panel and cable on top of the tank with Type III nylon cord.
    - Secure hydraulic cylinders up in the stowed position with doubled Type III nylon cord.
    - Ensure the tank manhole cover is closed and secured.
    - Secure the hose and reel with Type III nylon cord.
    - Close and secure the toolbox and hose stowage compartment covers with Type III nylon cord.
    - Cover all hitch pin and pin holes with plastic bags and tape.
  - **Rigging.** Rig the load according to the steps in Figure 8-13.

- **Hookup.** Two hookup teams are required for this load and stand on the work section. The static discharge person discharges the static electricity. The forward hookup person places apex fitting 1 (bumper end) onto the forward cargo hook. The aft hookup person places apex fitting 2 onto the aft cargo hook. The hookup teams then carefully dismount the sections and remain close to the load as the helicopter removes slack from the sling legs. When successful hookup is assured, the hookup teams quickly exit the area underneath the helicopter to the designated rendezvous point.
- **Derigging.** Derigging is the reverse of the preparation and rigging.

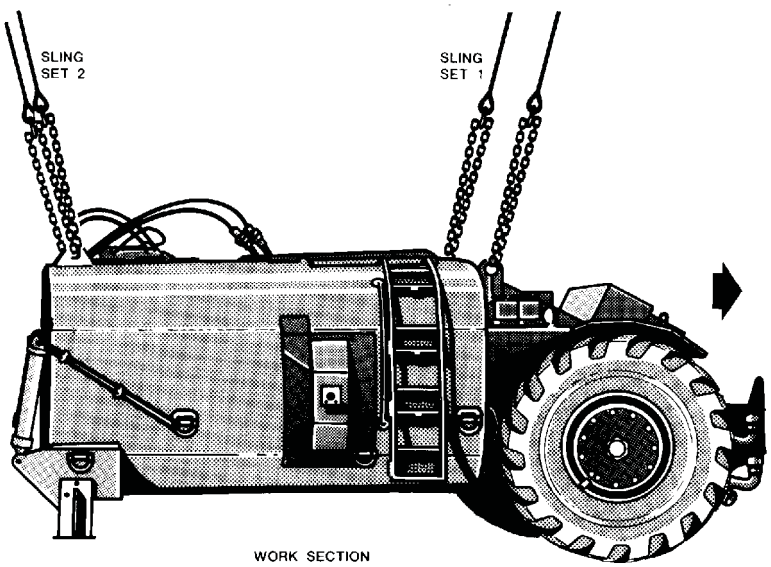

RIGGING STEPS

1. Place two sling legs on apex fitting number 1. Position apex fitting number 1 above the aft (wheel) end of the water tank.

2. Loop the chain end of the left and right sling legs through their respective lift provisions located on the corners of the water tank. Place the correct link from Table 8-13 in the grab hook. Secure the excess chain with tape or Type III nylon cord.

3. Place two sling legs on apex fitting number 2. Position apex fitting number 2 on forward end of the tank.

4. Loop the chain end of the left and right sling legs through their respective lift provisions located on the front end of the tank. Place the correct link from Table 8-13 in the grab hook. Secure the excess chain with tape or Type III nylon cord.

5. Raise the apex fittings above the load. Cluster and tie (breakaway technique) the sling legs in each sling set together to prevent entanglement during hookup and lift-off.

Figure 8-13. 613WDS Water Distributor, Sectionalized

ROLLER, TOWED, VIBRATING

8-15. The roller, towed, vibrating is rigged for dual-point sling load using the following procedures:

- **Applicability.** The following item in Table 8-14 is certified for the helicopter(s) listed in the following table by the US Army Natick Soldier Center:

Table 8-14. Roller, Towed, Vibrating

Nomenclature	*Max Weight (Pounds)*	*Sling Set*	*Link Count Front/Rear*	*Type of Aircraft*
Roller, Towed, Vibrating	4,830	10K	3/3	CH-47

- **Materials.** The following materials are required to rig this load:
  - Sling set (10,000-pound capacity) with one additional apex fitting.
  - Tape, adhesive, pressure-sensitive, 2-inch wide roll.
  - Cord, nylon, Type III, 550-pound breaking strength.
  - Webbing, cotton, 1/4-inch, 80-pound breaking strength.
- **Personnel.** Two persons can prepare and rig this load in 10 minutes.
- **Procedures.** The following procedures apply to this load:
  - **Preparation.** Prepare the load using the following steps:
    - Lift the tongue and position the support leg in its stowed or travel position and secure with Type III nylon cord.
    - Secure the battery box cover, fuel cap, hoses, and any loose items with tape or Type III nylon cord.
    - Ensure the fuel tank is not over 3/4 full. Inspect fuel tank cap, oil filler cap, and battery caps for proper installation.
  - **Rigging.** Rig the load according to the steps in Figure 8-14.
  - **Hookup.** Two hookup teams are required for this load and stand beside the roller. The static discharge person discharges the static electricity. The forward hookup person places apex fitting 2 onto the forward cargo hook. The aft hookup person places apex fitting 1 onto the aft cargo hook. The hookup teams then carefully dismount the sections and remain close to the load as the helicopter removes slack from the sling legs. When successful hookup is assured, the hookup teams quickly exit the area underneath the helicopter to the designated rendezvous point.
  - **Derigging.** Derigging is the reverse of the preparation and rigging procedures.

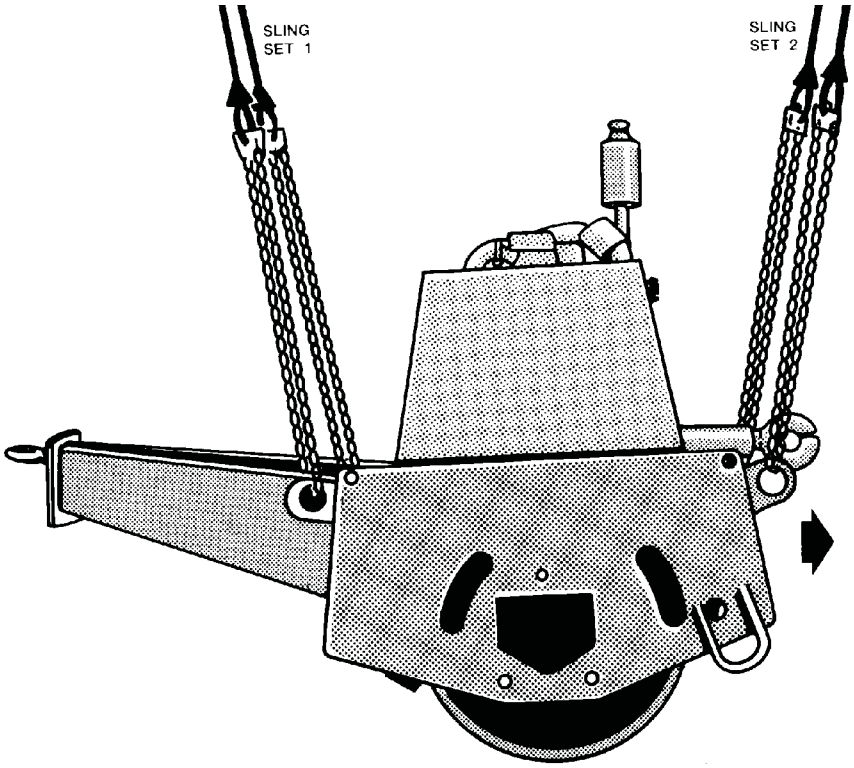

RIGGING STEPS

1. Place two sling legs on apex fitting number 1. Position apex fitting number 1 on the tongue.

2. Loop the chain end of the left and right sling legs through their respective lift provisions located on the tongue end of the roller. Place the correct link from Table 8-14 in the grab hook.

3. Place two sling legs on apex fitting number 2. Position apex fitting number 2 behind the roller.

4. Loop the chain end of the left and right sling legs through their respective lift provisions located on the rear end of the roller. Place the correct link from Table 8-14 in the grab hook.

5. Raise the apex fittings above the load. Cluster and tie (breakaway technique) the sling legs in each sling set together to prevent entanglement during hookup and lift-off.

Figure 8-14. Roller, Towed, Vibrating

ROLLERS, TOWED

8-16. The rollers, towed are rigged for dual-point sling load using the following procedures:

- **Applicability.** The following items in Table 8-15 are certified for the helicopter(s) listed in the following table by the US Army Natick Soldier Center:

Table 8-15. Rollers, Towed

Nomenclature	*Max Weight (Pounds)*	*Sling Set*	*Link Count Front/Rear*	*Type of Aircraft*
Roller, Towed, RO3402	4,600	10K	3/30	CH-47
Roller, Hercules, PT-11	3,520	10K	3/3	CH-47

- **Materials.** The following materials are required to rig this load:
  - Sling set (10,000-pound capacity) with one additional apex fitting.
  - Tape, adhesive, pressure-sensitive, 2-inch wide roll.
  - Cord, nylon, Type III, 550-pound breaking strength.
  - Webbing, cotton, 1/4-inch, 80-pound breaking strength.
  - Strap, cargo, tiedown, CGU-1/B (2 each).
- **Personnel.** Two persons can prepare and rig this load in 10 minutes.
- **Procedures.** The following procedures apply to this load:
  - **Preparation.** Prepare the load using the following steps:
    - Secure the drain plugs with tape.
    - Raise the tongue and secure with the CGU-1/B tiedown straps.
  - **Rigging.** Rig the load according to the steps in Figure 8-15.
  - **Hookup.** Two hookup teams are required for this load. The static discharge person discharges the static electricity. The forward hookup person stands on the forward end of the roller and places apex fitting 2 onto the forward cargo hook. The aft hookup person stands on the rear of the roller and places apex fitting 1 onto the aft cargo hook. The hookup teams then carefully dismount the load and remain close to the load as the helicopter removes slack from the sling legs. When successful hookup is assured, the hookup teams quickly exit the area underneath the helicopter to the designated rendezvous point.
  - **Derigging.** Derigging is the reverse of the preparation and rigging procedures.

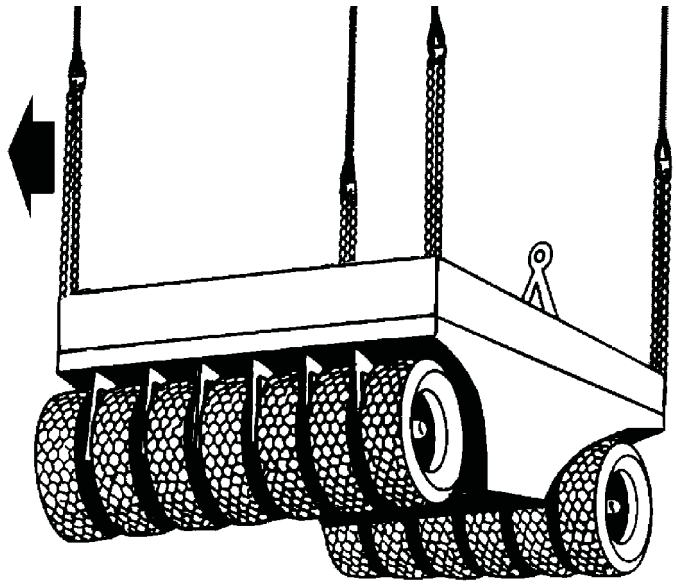

Figure 8-15. Towed Rollers

RIGGING STEPS
1. Place two sling legs on apex fitting number 1. Position apex fitting number 1 on top of the roller. 2. Loop the chain end of the left and right sling legs through their respective lift provisions located on the front corner of the roller. Place the correct link from Table 8-15 in the grab hook. 3. Place two sling legs on apex fitting number 2. Position apex fitting number 2 on top of the roller. 4. Loop the chain end of the left and right sling legs through their respective lift provisions located on the rear corners of the roller. Place the correct link from Table 8-15 in the grab hook. 5. Raise the apex fittings above the load. Cluster and tie (breakaway technique) the sling legs in each sling set together to prevent entanglement during hookup and lift-off.

Figure 8-15. Towed Rollers (Continued)

VIBRATING ROLLER, CATERPILLAR, RO-33

8-17. The vibrating roller, Caterpillar, RO-33 is rigged for dual-point sling load using the following procedures:

- **Applicability.** The following item in Table 8-16 is certified for the helicopter(s) listed in the following table by the US Army Natick Soldier Center:

Table 8-16. Vibrating Roller, Caterpillar, RO-33

Nomenclature	*Max Weight (Pounds)*	*Sling Set*	*Link Count Front/Rear*	*Type of Aircraft*
Vibrating Roller, Caterpillar, RO-33	16,425	25K	30/3	CH-47

- **Materials.** The following materials are required to rig this load:
  - Sling set (25,000-pound capacity) with one additional apex fitting..
  - Tape, adhesive, pressure-sensitive, 2-inch wide roll.
  - Cord, nylon, Type III, 550-pound breaking strength.
  - Webbing, cotton, 1/4-inch, 80-pound breaking strength.
  - Lumber, 2-inch x 4-inch (as required).
  - Felt sheet, cattle hair, Type IV, 1/2-inch or suitable padding.
- **Personnel.** Two persons can prepare and rig this load in 15 minutes.
- **Procedures.** The following procedures apply to this load:
  - **Preparation.** Prepare the load using the following steps:
    - Place the transmission in neutral and set the parking brake.
    - Ensure the fuel tank is not over 3/4 full. Ensure the fuel tank cap is in the vent position. Inspect the oil filter cap and battery caps for proper installation.
    - Secure the seat cushion to the frame with tape or Type III nylon cord.
    - Remove and secure the exhaust stack.
    - Tape all lights and gauges. Secure all loose covers and panels with tape or Type III nylon cord.

- Tie down the steering wheel with Type III nylon cord.
- Place the wooden block in the pivot point at the center of the roller to prevent the two halves from flexing during flight.

- **Rigging.** Rig the load according to the steps in Figure 8-16.
- **Hookup.** The hookup team stands beside the roller. The static wand person discharges the static electricity with the static wand. The forward hookup person places apex fitting 2 onto the forward cargo hook. The aft hookup person places apex fitting 1 onto the aft cargo hook. The hookup team then moves clear of the load but remains close to the load as the helicopter removes slack from the sling legs. When successful hookup is assured, the hookup team quickly exits the area underneath the helicopter to the designated rendezvous point.
- **Derigging.** Derigging is the reverse of the preparation and rigging procedures.

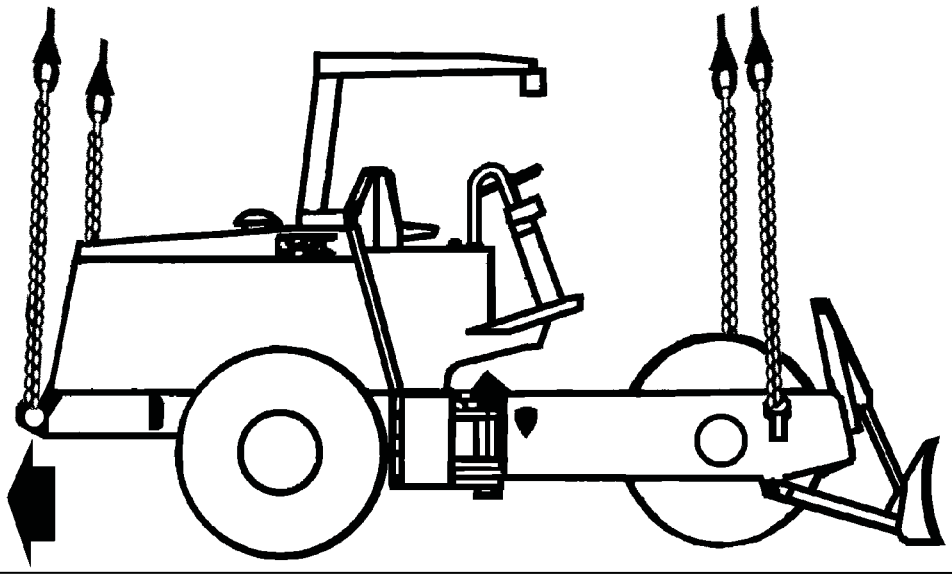

RIGGING STEPS

1. Connect 2 sling legs to apex fitting number 1. Position the apex fitting next to the front of the roller.

2. Loop the chain end of the sling legs through their respective lift provisions. Place the correct link from Table 8-16 in the grab hook.

3. Connect 2 sling legs to apex fitting number 2. Position the apex fitting on top of the aft end (engine compartment end) of the roller.

4. Loop the chain end of the sling legs through their respective lift provisions located on the aft end of the roller. Place the correct link from Table 8-16 in the grab hook.

5. Pad the chain where it contacts the engine compartment. Secure all excess chain with tape or Type III nylon cord.

6. Cluster and tie (breakaway technique) the sling legs in each sling set together to prevent entanglement during hookup and lift-off.

Figure 8-16. Vibrating Roller, Caterpillar, RO-33

ROLLER, COMPACTOR, VIBRATOR

8-18. The roller, compactor, vibrator is rigged for dual-point sling load using the following procedures:

- **Applicability.** The following item in Table 8-17 is certified for the helicopter(s) listed in the following table by the US Army Natick Soldier Center:

Table 8-17. Roller, Compactor, Vibrator

Nomenclature	*Max Weight (Pounds)*	*Sling Set*	*Link Count Front/Rear*	*Type of Aircraft*
Roller, Compactor, Vibrator	24,340	40K	41/3	CH-53

- **Materials.** The following materials are required to rig this load:
  - Sling set (40,000-pound capacity) with one additional apex fitting.
    - Additional chain length, part number 607050, from a 40,000-pound capacity sling set (2 each).
    - Additional coupling link, part number 577-0815, from a 40,000-pound sling set (2 each).
  - Tape, adhesive, pressure-sensitive, 2-inch wide roll.
  - Cord, nylon, Type III, 550-pound breaking strength.
  - Webbing, cotton, 1/4-inch, 80-pound breaking strength.
  - Felt sheet, cattle hair, Type IV, 1/2-inch or suitable padding
  - Strap, cargo, tiedown, CGU-1/B (as required).
- **Personnel.** Two persons can prepare and rig this load in 30 minutes.
- **Procedures.** The following procedures apply to this load:
  - **Preparation.** Prepare the load using the following steps:
    - Ensure the roller is secured in the down position according to the instructions in the operator's manual. Secure all hatches and door panels with CGU-1/B tiedown straps.
    - Tape the air filter intake and the exhaust pipe opening. Tape the windows, lights, and reflectors.
    - Engage the hand brake and place the transmission in neutral.
    - Ensure the fuel tank is not over 3/4 full. Inspect fuel tank cap, oil filler cap, and battery caps for proper installation.
  - **Rigging.** Rig the load according to the steps in Figure 8-17.
  - **Hookup.** Two hookup teams are required for this load. The static discharge person discharges the static electricity. The forward hookup person stands on the forward end of the compactor and places apex fitting 1 onto the forward cargo hook. The aft hookup person stands on the rear of the compactor and places apex fitting 2 onto the aft cargo hook. The hookup teams then carefully dismount the load and remain close to the load as the helicopter removes slack from the sling legs. When successful hookup is assured, the hookup teams quickly exit the area underneath the helicopter to the designated rendezvous point.
  - **Derigging**. Derigging is the reverse of the preparation and rigging procedures.

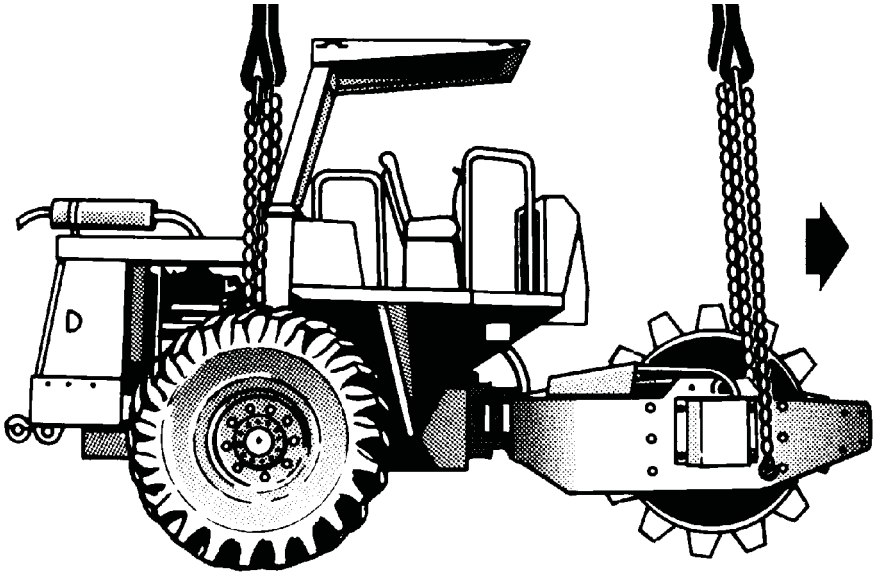

RIGGING STEPS

1. Place two sling legs on apex fitting number 1. Attach an additional chain length to each sling leg chain with the coupling link. Position apex fitting number 1 on top of the front of the compactor.

2. Loop the chain end of the left and right sling legs through their respective lift provisions located at the bottom of the roller supporting arm. Place the correct link from Table 8-17 in the grab hook. Secure the excess chain with tape or Type III nylon cord.

3. Place two sling legs on apex fitting number 2. Position apex fitting number 2 on top of the rear of the compactor.

4. Loop the chain end of the left and right sling legs through their respective lift provisions located between the engine and the rear tire. Place the correct link from Table 8-17 in the grab hook.

5. Pad the sling legs where the legs rub against the engine housing. Secure the padding with tape or Type III nylon cord.

6. Raise the apex fittings above the load. Cluster and tie (breakaway technique) the sling legs in each sling set together to prevent entanglement during hookup and lift-off.

Figure 8-17. Roller, Compactor, Vibrator

MINE CLEARING LINE CHARGE MOUNTED ON M353 TRAILER

8-19. The mine clearing line charge mounted on M353 trailer is rigged for dual-point sling load using the following procedures:

- **Applicability.** The following item in Table 8-18 is certified for the helicopter(s) listed in the following table by the US Army Natick Soldier Center:

Table 8-18. Mine Clearing Line Charge Mounted on M353 Trailer

Nomenclature	*Max Weight (Pounds)*	*Sling Set*	*Link Count Front/Rear*	*Type of Aircraft*
MK155 Launcher with M68A2 Demolition Charge and MK22 Rocket Motor	6,372	10K	3/3	CH-47

- **Materials.** The following materials are required to rig this load:
  - Sling set (10,000-pound capacity) with one additional apex fitting.
  - Tape, adhesive, pressure-sensitive, 2-inch wide roll.
  - Cord, nylon, Type III, 550-pound breaking strength.
  - Webbing, cotton, 1/4-inch, 80-pound breaking strength.
  - Strap, cargo, tiedown, CGU-1/B (4 each).
- **Personnel.** Two persons can prepare and rig this load in 10 minutes.
- **Procedures.** The following procedures apply to this load:
  - **Preparation.** Prepare the load using the following steps:
    - Ensure all components are securely attached together.
    - Ensure the storage box lid is closed and secure. Secure safety chains, hoses, and any other loose items with tape or Type III nylon cord.
    - Engage the parking brake.

Note. The rocket motor cannot be safely secured to the load in this configuration; therefore, the rocket motor box must be kept separate and loaded internally into the helicopter.

  - **Rigging.** Rig the load according to the steps in Figure 8-18.
  - **Hookup.** Two hookup teams are required for this load. The static discharge person discharges the static electricity. The forward hookup person stands on the trailer chassis and places apex fitting 2 onto the forward cargo hook. The aft hookup person stands on the trailer chassis and places apex fitting 1 (lunette end) onto the aft cargo hook. The hookup teams then carefully dismount the load and remain close to the load as the helicopter removes slack from the sling legs. When successful hookup is assured, the hookup teams quickly exit the area underneath the helicopter to the designated rendezvous point.
  - **Derigging.** Derigging is the reverse of the preparation and rigging procedures.

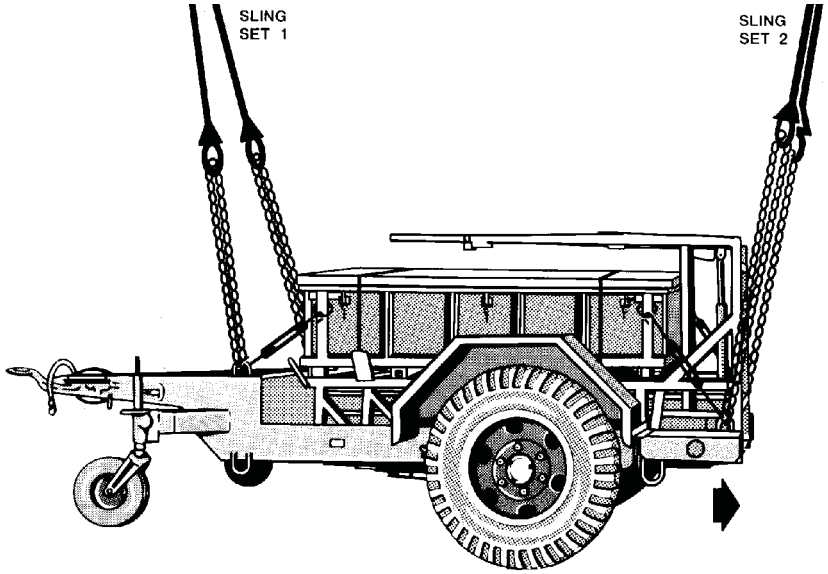

RIGGING STEPS

1. Place two sling legs on apex fitting number 1. Position apex fitting number 1 on the trailer tongue.

2. Loop the chain end of the left and right sling legs through their respective lift provisions located aft of the trailer leveling wheels. Place the correct link from Table 8-18 in the grab hook.

3. Place two sling legs on apex fitting number 2. Position apex fitting number 2 on top of the aft end of the launcher.

4. Loop the chain end of the left and right sling legs through their respective lift provisions located aft of the trailer wheels by the bumper. Place the correct link from Table 8-18 in the grab hook.

5. Pull and tie (breakaway technique) the sling legs to the launch rail.

6. Raise the apex fittings above the load. Cluster and tie (breakaway technique) the sling legs in each sling set together to prevent entanglement during hookup and lift-off.

Figure 8-18. Mine Clearing Line Charge Mounted on M353 Trailer

MINE CLEARING LINE CHARGE MOUNTED ON M200A1 TRAILER

8-20. The mine clearing line charge mounted on M200A1 trailer is rigged for dual-point sling load using the following procedures:

- **Applicability.** The following item in Table 8-19 is certified for the helicopter(s) listed in the following table by the US Army Natick Soldier Center:

Table 8-19. Mine Clearing Line Charge Mounted on M200A1 Trailer

Nomenclature	*Max Weight (Pounds)*	*Sling Set*	*Link Count Front/Rear*	*Type of Aircraft*
MK155 Launcher with M68A2 Demolition Charge and MK22 Rocket Motor	6,002	10K	10/3	CH-47

- **Materials.** The following materials are required to rig this load:
  - Sling set (10,000-pound capacity) with one additional apex fitting.
  - Tape, adhesive, pressure-sensitive, 2-inch wide roll.
  - Cord, nylon, Type III, 550-pound breaking strength.
  - Webbing, cotton, 1/4-inch, 80-pound breaking strength.
  - Strap, cargo, tiedown, CGU-1/B (4 each).
- **Personnel.** Two persons can prepare and rig this load in 20 minutes.
- **Procedures.** The following procedures apply to this load:
  - **Preparation.** Prepare the load using the following steps:
    - Ensure all components are securely attached together.
    - Ensure the storage box lid is closed and secure. Secure safety chains, hoses, and any other loose items with tape or Type III nylon cord.
    - Engage the parking brake.
    - Ensure the launch is in the collapsed or storage position.

Note. The rocket motor cannot be safely secured to the load in this configuration; therefore, the rocket motor box must be kept separate and loaded internally into the helicopter.

  - **Rigging.** Rig the load according to the steps in Figure 8-19.
  - **Hookup.** Two hookup teams are required for this load. The static discharge person discharges the static electricity. The forward hookup person stands on the demolition box and places apex fitting 2 onto the forward cargo hook. The aft hookup person stands on the demolition box (lunette end) and places apex fitting 1 onto the aft cargo hook. The hookup teams then carefully dismount the load and remain close to the load as the helicopter removes slack from the sling legs. When successful hookup is assured, the hookup teams quickly exit the area underneath the helicopter to the designated rendezvous point.
  - **Derigging.** Derigging is the reverse of the preparation and rigging procedures.

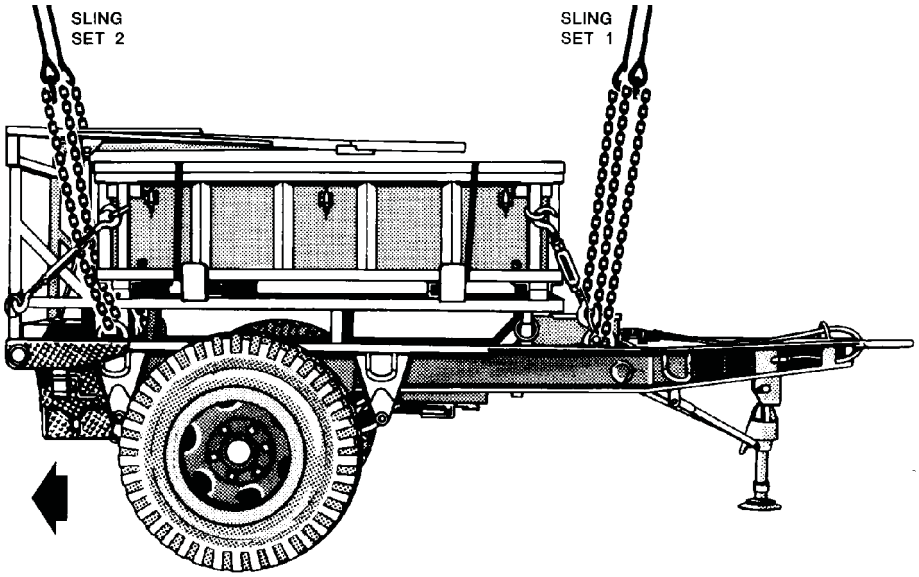

RIGGING STEPS

1. Place two sling legs on apex fitting number 1. Position apex fitting number 1 on top of the demolition charge container on the lunette end.

2. Loop the chain end of the left and right sling legs through their respective lift provisions located on the trailer chassis frame aft of the lunette. Place the correct link from Table 8-19 in the grab hook.

3. Place two sling legs on apex fitting number 2. Position apex fitting number 2 on top of the aft end of the launcher.

4. Loop the chain end of the left and right sling legs through their respective lift provisions located on the trailer chassis below the aft end of the demolition charge container. Place the correct link from Table 8-19 in the grab hook. Secure the excess chain with tape or Type III nylon cord.

5. Raise the apex fittings above the load. Cluster and tie (breakaway technique) the sling legs in each sling set together to prevent entanglement during hookup and lift-off.

Figure 8-19. Mine Clearing Line Charge Mounted on M200A1 Trailer

LRT-110, 7 ½-TON CRANE

8-21. The LRT-110, 7 ½-ton crane is rigged for dual-point sling load using the following procedures:

- **Applicability.** The following item in Table 8-20 is certified for the helicopter(s) listed in the following table by the US Army Natick Soldier Center:

Table 8-20. LRT-110, 7 ½-Ton Crane

Nomenclature	*Max Weight (Pounds)*	*Sling Set*	*Link Count Front/Rear*	*Type of Aircraft*
LRT-110, 7 ½-Ton Crane	24,230	25K	3/3	CH-47

- **Materials.** The following materials are required to rig this load:
  - Sling set (25,000-pound capacity) with one additional apex fitting.
  - Tape, adhesive, pressure-sensitive, 2-inch wide roll.
  - Cord, nylon, Type III, 550-pound breaking strength.
  - Webbing, cotton, 1/4-inch, 80-pound breaking strength.
  - Strap, cargo, tiedown, CGU-1/B (1 each).
  - Felt sheet, cattle hair, Type IV, 1/2-inch or suitable padding.
  - Webbing, tubular, nylon, 1/2-inch, 1,000-pound breaking strength.
- **Personnel.** Two persons can prepare and rig this load in 20 minutes.
- **Procedures.** The following procedures apply to this load:
  - **Preparation.** Prepare the load using the following steps:
    - Fold the side mirrors in toward the cab and secure with tape or Type III nylon cord. Tape the windshield wipers to the windshield.
    - Ensure the front wheels are straight and secure the steering wheel with Type III nylon cord.
    - Engage the hand brake.
    - Secure the doors, toolbox cover, and all loose equipment with tape or Type III nylon cord.
    - Secure the hook-block assembly to the end of the boom mast with a CGU-1/B tiedown strap.
    - Secure the boom light power cable with tape or Type III nylon cord.
    - Insert wooden cable wedges at the drum to prevent the cable from unspooling if the cable becomes slack.
    - Secure the cable wedges with 1/2-inch tubular nylon.
    - Ensure the fuel tank is not over 3/4 full. Inspect fuel tank cap, oil filler cap, and battery caps for proper installation.
  - **Rigging.** Rig the load according to the steps in Figure 8-20.
  - **Hookup.** Two hookup teams are required for this load. The static discharge person discharges the static electricity. The forward hookup person stands on the engine deck and places apex fitting 2 onto the forward cargo hook. The aft hookup person stands on the cab top and places apex fitting 1 onto the aft cargo hook. The hookup teams then carefully dismount the load and remain close to the load as the helicopter removes slack from the sling legs. When successful hookup is assured, the hookup teams quickly exit the area underneath the helicopter to the designated rendezvous point.
  - **Derigging**. Derigging is the reverse of the preparation and rigging procedures.

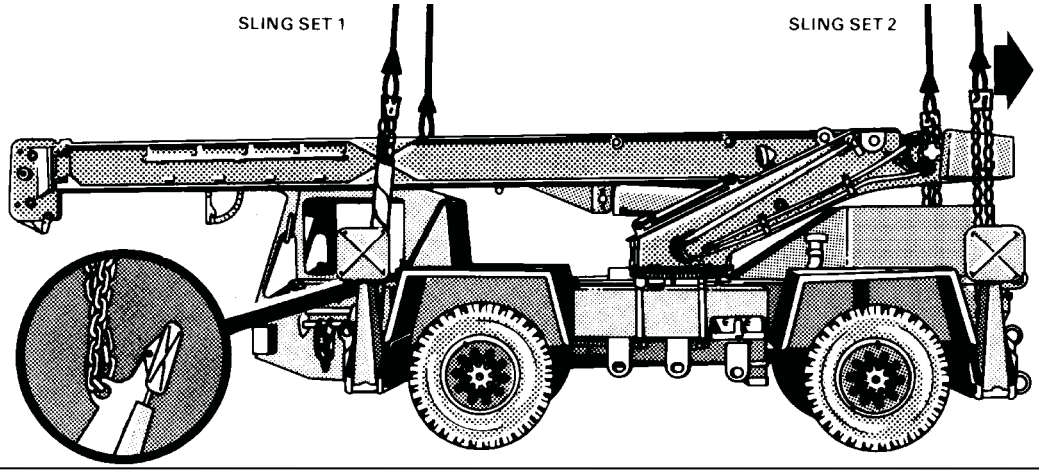

RIGGING STEPS

1. Place two sling legs on apex fitting number 1. Position apex fitting number 1 on top of the boom directly above the front wheels.
2. Loop the chain end of the left and right sling legs through their respective lift provisions located on the inboard side of the front outriggers. Place the correct link from Table 8-20 in the grab hook.
3. Pad the slings where they contact the cab and secure the padding with tape or Type III nylon cord.
4. Place two sling legs on apex fitting number 2. Position apex fitting number 2 on top of the boom directly above the rear wheels.
5. Loop the chain end of the left and right sling legs through their respective lift provisions located on the inboard side of the rear outriggers. Place the correct link from Table 8-20 in the grab hook.
6. Raise the apex fittings above the load. Cluster and tie (breakaway technique) the sling legs in each sling set together to prevent entanglement during hookup and lift-off.

Figure 8-20. LRT-110, 7 1/2-Ton Crane

LRT-110, 7 ½-TON CRANE BOOM

8-22. The LRT-110, 7 ½-ton crane boom is rigged for dual-point sling load using the following procedures:

- **Applicability.** The following item in Table 8-21 is certified for the helicopter(s) listed in the following table by the US Army Natick Soldier Center:

Table 8-21. LRT-110, 7 ½-Ton Crane Boom

Nomenclature	*Max Weight (Pounds)*	*Sling Set*	*Link Count Front/Rear*	*Type of Aircraft*
LRT-110, 7 ½-Ton Crane Boom	8,600	10K	3/3	CH-47

- **Materials.** The following materials are required to rig this load:
  - Sling set (10,000-pound capacity) with one additional apex fitting.
  - Tape, adhesive, pressure-sensitive, 2-inch wide roll.

- Cord, nylon, Type III, 550-pound breaking strength.
- Webbing, cotton, 1/4-inch, 80-pound breaking strength.
- Strap, cargo, tiedown, CGU-1/B (1 each).
- Webbing, tubular, nylon, 1/2-inch, 1,000-pound breaking strength.

- **Personnel.** Two persons can prepare and rig this load in 20 minutes.
- **Procedures.** The following procedures apply to this load:
  - **Preparation.** Prepare the load using the following steps:
    - Sectionalize the crane according to the instructions in the operator's manual.
    - Secure the hook-block assembly to the end of the boom mast with a CGU-1/B tiedown strap.
    - Secure the boom light power cable with tape or Type III nylon cord.
    - Insert wooden cable wedges at the drum to prevent the cable from uncoiling if the cable becomes slack.
    - Secure the cable wedges with 1/2-inch tubular nylon.
    - Secure the boom hydraulic hoses with tape or Type III nylon cord. Ensure the hoses are clear of the boom base.
  - **Rigging.** Rig the load according to the steps in Figure 8-21.
  - **Hookup.** Two hookup teams are required for this load. The static discharge person discharges the static electricity. The forward hookup person stands beside the rear (counterweight) end and places apex fitting 1 onto the forward cargo hook. The aft hookup person stands beside the middle of the boom and places apex fitting 2 onto the aft cargo hook. The hookup teams then carefully dismount the load and remain close to the load as the helicopter removes slack from the sling legs. When successful hookup is assured, the hookup teams quickly exit the area underneath the helicopter to the designated rendezvous point.
  - **Derigging.** Derigging is the reverse of the preparation and rigging procedures.

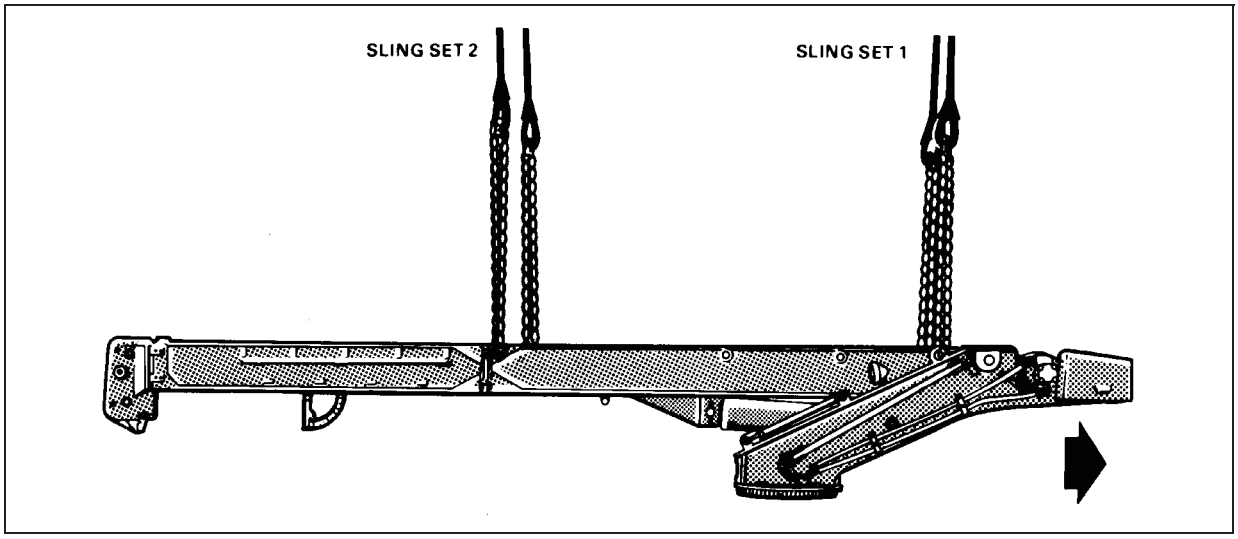

Figure 8-21. LRT-110, 7 1/2-Ton Crane Boom

RIGGING STEPS
1. Place two sling legs on apex fitting number 1. Position apex fitting number 1 on top of the boom counterweight. 2. Loop the chain end of the left and right sling legs through their respective lift provisions located on top of boom left and right support arms. Place the correct link from Table 8-21 in the grab hook. 3. Place two sling legs on apex fitting number 2. Position apex fitting number 2 on top of the middle of the boom by the lift provisions. 4. Loop the chain end of the left and right sling legs through their respective lift provisions located on sides of the boom. Place the correct link from Table 8-21 in the grab hook. 5. Raise the apex fittings above the load. Cluster and tie (breakaway technique) the sling legs in each sling set together to prevent entanglement during hookup and lift-off.

Figure 8-21. LRT-110, 7 1/2-Ton Crane Boom (Continued)

LRT-110, 7 ½-TON CRANE POWER UNIT

8-23. The LRT-110, 7 ½-ton crane power unit is rigged for dual-point sling load using the following procedures:

- **Applicability.** The following item in Table 8-22 is certified for the helicopter(s) listed in the following table by the US Army Natick Soldier Center:

Table 8-22. LRT-110, 7 ½-Ton Crane Power Unit

Nomenclature	*Max Weight (Pounds)*	*Sling Set*	*Link Count Front/Rear*	*Type of Aircraft*
LRT-110, 7 ½-Ton Crane Power Unit	15,600	25K	3/3	CH-47

- **Materials.** The following materials are required to rig this load:
  - Sling set (25,000-pound capacity) with one additional apex fitting.
  - Tape, adhesive, pressure-sensitive, 2-inch wide roll.
  - Cord, nylon, Type III, 550-pound breaking strength.
  - Webbing, cotton, 1/4-inch, 80-pound breaking strength.
  - Strap, cargo, tiedown, CGU-1/B (1 each).
  - Webbing, tubular, nylon, 1/2-inch, 1,000-pound breaking strength.
  - Felt sheet, cattle hair, Type IV, 1/2-inch or suitable padding.
- **Personnel.** Two persons can prepare and rig this load in 20 minutes.
- **Procedures.** The following procedures apply to this load:
  - **Preparation.** Prepare the load using the following steps:
    - Sectionalize the crane according to the instructions in the operator's manual.
    - Fold the side mirrors in toward the cab and secure with tape or Type III nylon cord. Tape the windshield wipers to the windshield.
    - Ensure the front wheels are straight and secure the steering wheel with Type III nylon cord. Engage the hand brake.

- Ensure the fuel tank is not over 3/4 full. Inspect fuel tank cap, oil filler cap, and battery caps for proper installation.
- Secure the doors, toolbox cover, and all loose equipment with tape or Type III nylon cord.

- **Rigging.** Rig the load according to the steps in Figure 8-22.
- **Hookup.** Two hookup teams are required for this load. The static discharge person discharges the static electricity. The forward hookup person stands on the engine deck and places apex fitting 2 onto the forward cargo hook. The aft hookup person stands on the cab top and places apex fitting 1 onto the aft cargo hook. The hookup teams then carefully dismount the load and remain close to the load as the helicopter removes slack from the sling legs. When successful hookup is assured, the hookup teams quickly exit the area underneath the helicopter to the designated rendezvous point.
- **Derigging.** Derigging is the reverse of the preparation and rigging procedures.

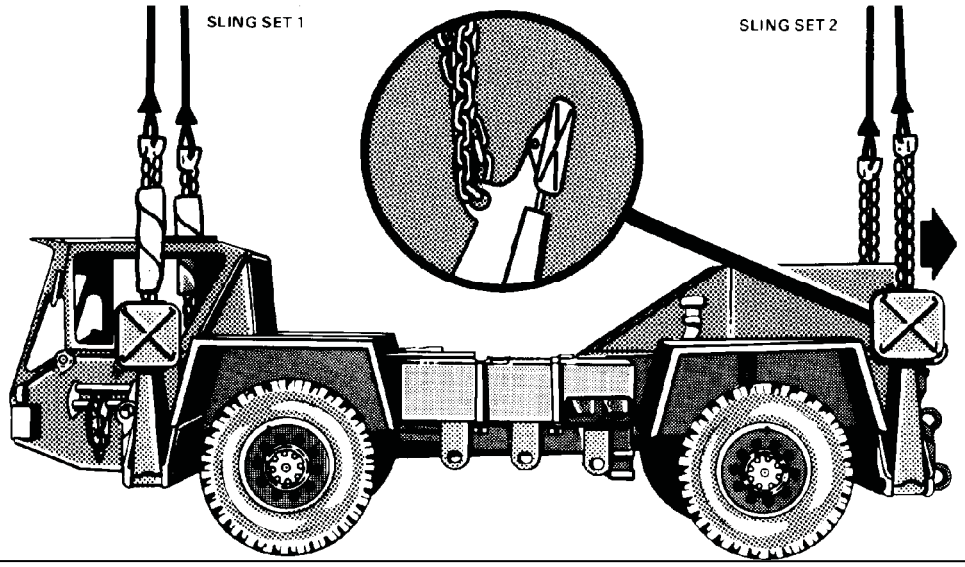

RIGGING STEPS

1. Place two sling legs on apex fitting number 1. Position apex fitting number 1 on top of the boom directly above the front wheels.
2. Loop the chain end of the left and right sling legs through their respective lift provisions located on the inboard side of the front outriggers. Place the correct link from Table 8-22 in the grab hook.
3. Pad the slings where they contact the cab and secure the padding with tape or Type III nylon cord.
4. Place two sling legs on apex fitting number 2. Position apex fitting number 2 on top of the boom directly above the rear wheels.
5. Loop the chain end of the left and right sling legs through their respective lift provisions located on the inboard side of the rear outriggers. Place the correct link from Table 8-22 in the grab hook.
6. Raise the apex fittings above the load. Cluster and tie (breakaway technique) the sling legs in each sling set together to prevent entanglement during hookup and lift-off.

Figure 8-22. LRT-110, 7 1/2-Ton Crane, Power Unit

SP-7 WHEEL-MOUNTED CRANE

8-24. The SP-7 wheel-mounted crane is rigged for dual-point sling load using the following procedures:

- **Applicability.** The following item in Table 8-23 is certified for the helicopter(s) listed in the following table by the US Army Natick Soldier Center:

Table 8-23. SP-7 Wheel-Mounted Crane

Nomenclature	*Max Weight (Pounds)*	*Sling Set*	*Link Count Front/Rear*	*Type of Aircraft*
SP-7 Wheel-Mounted Crane (Pettibone)	27,640	40K	3/11	CH-53

- **Materials.** The following materials are required to rig this load:
  - Sling set (40,000-pound capacity) with one additional apex fitting.
  - Tape, adhesive, pressure-sensitive, 2-inch wide roll.
  - Cord, nylon, Type III, 550-pound breaking strength.
  - Webbing, cotton, 1/4-inch, 80-pound breaking strength.
  - Strap, cargo, tiedown, CGU-1/B (as required).
- **Personnel.** Two persons can prepare and rig this load in 30 minutes.
- **Procedures.** The following procedures apply to this load:
  - **Preparation.** Prepare the load using the following steps:
    - Ensure the boom is secured in the down position according to the operator's manual.
    - Secure all hatches and doors with tiedown straps or Type III nylon cord.
    - Ensure the front wheels are pointed straight ahead. Tie down the steering wheel using Type III nylon cord.
    - Ensure the fuel tank is not over 3/4 full. Inspect fuel tank cap, oil filler cap, and battery caps for proper installation.
    - Engage the hand brake and place the transmission in neutral.
    - Tape all windows, lights, and reflectors. Tape the exhaust opening.
  - **Rigging.** Rig the load according to the steps in Figure 8-23.
  - **Hookup.** Two hookup teams are required for this load. The static discharge person discharges the static electricity. The forward hookup person stands on the front of the crane and places apex fitting 1 onto the forward cargo hook. The aft hookup person stands on the rear of the crane and places apex fitting 2 onto the aft cargo hook. The hookup teams then carefully dismount the load and remain close to the load as the helicopter removes slack from the sling legs. When successful hookup is assured, the hookup teams quickly exit the area underneath the helicopter to the designated rendezvous point.
  - **Derigging.** Derigging is the reverse of the preparation and rigging procedures.

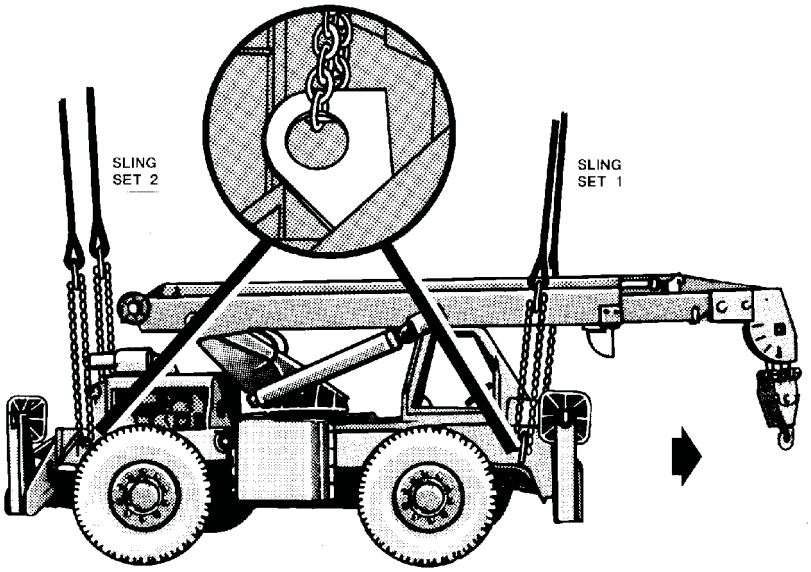

RIGGING STEPS

1. Place two sling legs on apex fitting number 1. Position apex fitting number 1 on top of the front of the crane.

2. Loop the chain end of the left and right sling legs through their respective lift provisions located below the front corners of the windshield. Place the correct link from Table 8-23 in the grab hook.

3. Place two sling legs on apex fitting number 2. Position apex fitting number 2 on top of the aft end of the crane.

4. Loop the chain end of the left and right sling legs through their respective lift provisions located near the crane rear end. Place the correct link from Table 8-23 in the grab hook.

5. Raise the apex fittings above the load. Cluster and tie (breakaway technique) the sling legs in each sling set together to prevent entanglement during hookup and lift-off.

Figure 8-23. SP-7 Wheel-Mounted Crane

TRUCK FORKLIFT, MC-4000

8-25. The truck forklift, MC-4000 is rigged for dual-point sling load using the following procedures:

- **Applicability.** The following item in Table 8-24 is certified for the helicopter(s) listed in the following table by the US Army Natick Soldier Center:

Table 8-24. Truck Forklift, MC-4000

Nomenclature	*Max Weight (Pounds)*	*Sling Set*	*Link Count Front/Rear*	*Type of Aircraft*
Truck Forklift, MC-4000	8,600	15K	3/25	CH-53

- **Materials.** The following materials are required to rig this load:
  - Sling set (15,000-pound capacity) (2 each).
  - Tape, adhesive, pressure-sensitive, 2-inch wide roll.

- Cord, nylon, Type III, 550-pound breaking strength.
- Webbing, cotton, 1/4-inch, 80-pound breaking strength.
- Strap, cargo, tiedown, CGU-1/B (as required).

- **Personnel.** Two persons can prepare and rig this load in 10 minutes.
- **Procedures.** The following procedures apply to this load:
  - **Preparation.** Prepare the load using the following steps:
    - Engage the parking brake and place the transmission in neutral.
    - Secure the seat cushion with Type III nylon cord.
    - Ensure the front wheels are pointed straight ahead. Tie down the steering wheel using Type III nylon cord.
    - Ensure the fuel tank is not over 3/4 full. Inspect fuel tank cap, oil filler cap, and battery caps for proper installation.
    - Insert the articulating lock pin to keep the forklift front and rear sections from twisting in flight.
    - Raise the fork tines approximately 1 foot above the ground. Lift the ends of the fork tines by hand to point upward. Secure the fork tines to the lift cylinder frame using the tiedown strap.
  - **Rigging.** Rig the load according to the steps in Figure 8-24.

Note: When using the 15,000-pound capacity multileg sling set, tie or tape the inner sling legs to the outer sling legs.

- **Hookup.** Two hookup teams are required for this load. The static discharge person discharges the static electricity. The forward hookup person kneels on top of the ROPS and places apex fitting 1 onto the forward cargo hook. The aft hookup person stands on the engine deck and places apex fitting 2 onto the aft cargo hook. The hookup teams then carefully dismount the load and remain close to the load as the helicopter removes slack from the sling legs. When successful hookup is assured, the hookup teams quickly exit the area underneath the helicopter to the designated rendezvous point.
- **Derigging.** Derigging is the reverse of the preparation and rigging procedures.

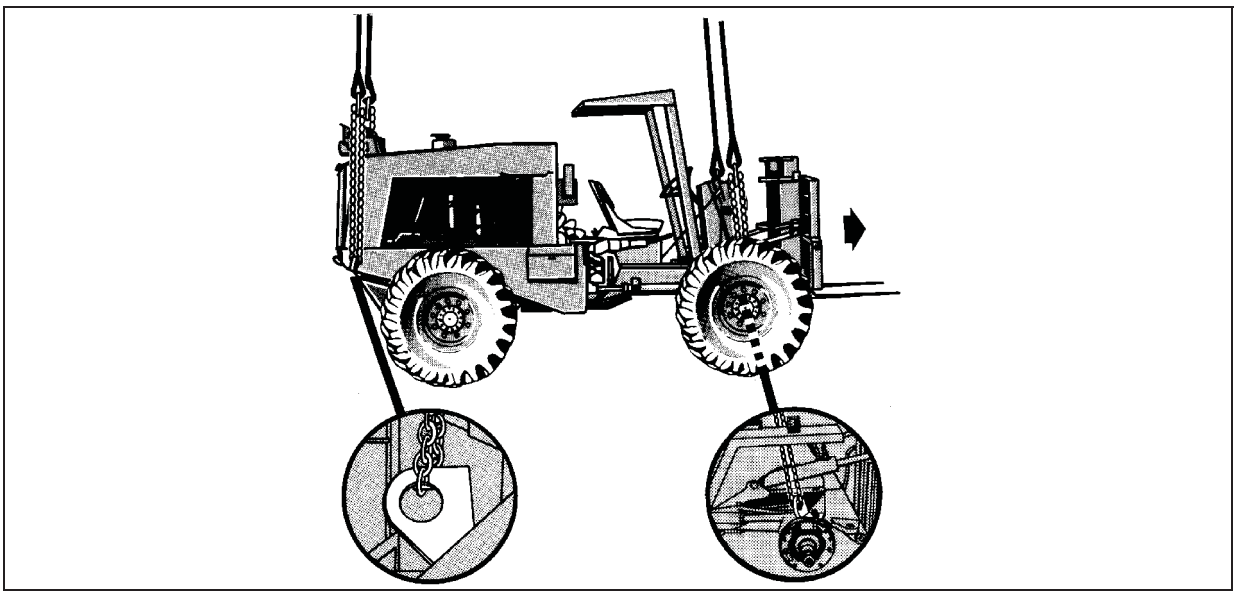

Figure 8-24. Truck, Forklift, MC-4000

RIGGING STEPS
1. Position sling set number 1 on top of the ROPS. 2. Loop the chain end of the left and right sling legs through their respective lift provisions located between the front tire and the chassis. Place the correct link from Table 8-24 in the grab hook. 3. Position sling set number 2 on top of the engine deck. 4. Loop the chain end of the left and right sling legs through their respective lift provisions located on the rear of the forklift. Place the correct link from Table 8-24 in the grab hook. Secure the excess chain with tape or Type III nylon cord. 5. Raise the apex fittings above the load. Cluster and tie (breakaway technique) the sling legs in each sling set together to prevent entanglement during hookup and lift-off.

Figure 8-24. Truck, Forklift, MC-4000 (Continued)

TRUCK FORKLIFT, RT-4000

8-26. The truck forklift, RT-4000 is rigged for dual-point sling load using the following procedures:

- **Applicability.** The following item in Table 8-25 is certified for the helicopter(s) listed in the following table by the US Army Natick Soldier Center:

Table 8-25. Truck Forklift, RT-4000

Nomenclature	*Max Weight (Pounds)*	*Sling Set*	*Link Count Front/Rear*	*Type of Aircraft*
Truck Forklift, RT-4000	10,860	15K	3/40	CH-53

- **Materials.** The following materials are required to rig this load:
  - Sling set (15,000-pound capacity) (2 each).
  - Tape, adhesive, pressure-sensitive, 2-inch wide roll.
  - Cord, nylon, Type III, 550-pound breaking strength.
  - Webbing, cotton, 1/4-inch, 80-pound breaking strength.
  - Strap, cargo, tiedown, CGU-1/B (as required).
- **Personnel.** Two persons can prepare and rig this load in 10 minutes.
- **Procedures.** The following procedures apply to this load:
  - **Preparation.** Prepare the load using the following steps:
    - Engage the hand brake and place the transmission in neutral.
    - Raise the fork tines approximately 1 foot above the ground. Lift the ends of the fork tines by hand to point upward. Secure the fork tines to the lift cylinder frame using the tiedown strap.
    - Ensure the front wheels are pointed straight ahead. Tie down the steering wheel using Type III nylon cord.
    - Ensure the fuel tank is not over 3/4 full. Inspect fuel tank cap, oil filler cap, and battery caps for proper installation.
    - Tape the opening in the exhaust pipe.
  - **Rigging.** Rig the load according to the steps in Figure 8-25.

Note. When using the 15,000-pound capacity multileg sling set, tie or tape the inner sling legs to the outer sling legs.

- **Hookup.** Two hookup teams are required for this load. The static discharge person discharges the static electricity. The forward hookup person stands on top of the FOPS and places apex fitting 1 onto the forward cargo hook. The aft hookup person stands on the engine deck and places apex fitting 2 onto the aft cargo hook. The hookup teams then carefully dismount the load and remain close to the load as the helicopter removes slack from the sling legs. When successful hookup is assured, the hookup teams quickly exit the area underneath the helicopter to the designated rendezvous point.
- **Derigging.** Derigging is the reverse of the preparation and rigging procedures.

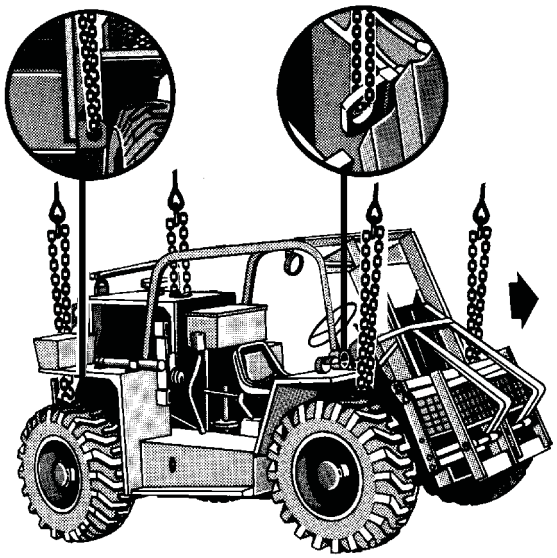

RIGGING STEPS

1. Position sling set number 1 on top of the FOPS.
2. Loop the chain end of the left and right sling legs through their respective lift provisions (not the tiedown provisions) located directly above the forward axle housing between the front tire and the hydraulic cylinder. Place the correct link from Table 8-25 in the grab hook.
3. Position sling set number 2 on top of the engine deck.
4. Loop the chain end of the left and right sling legs through their respective lift provisions located above the rear winch. Place the correct link from Table 8-25 in the grab hook. Secure the excess chain with tape or Type III nylon cord.
5. Pull the front sling legs up and tie (breakaway technique) the grablinks to the front side of the upper light bracket. Pull the rear sling legs together on top of the engine deck and or tie (breakaway technique) the grablinks together.
6. Raise the apex fittings above the load. Cluster and tie (breakaway technique) the sling legs in each sling set together to prevent entanglement during hookup and lift-off.

Figure 8-25. Truck, Forklift, RT-4000

TRUCK FORKLIFT, MC-6000

8-27. The truck forklift, MC-6000 is rigged for dual-point sling load using the following procedures:

- **Applicability.** The following item in Table 8-26 is certified for the helicopter(s) listed in the following table by the US Army Natick Soldier Center:

Table 8-26. Truck Forklift, MC-6000

Nomenclature	*Max Weight (Pounds)*	*Sling Set*	*Link Count Front/Rear*	*Type of Aircraft*
Truck Forklift, MC-6000	19,800	40K	5/5	CH-53

- **Materials.** The following materials are required to rig this load:
  - Sling set (40,000-pound capacity) with one additional apex fitting.
  - Tape, adhesive, pressure-sensitive, 2-inch wide roll.
  - Cord, nylon, Type III, 550-pound breaking strength.
  - Webbing, cotton, 1/4-inch, 80-pound breaking strength.
  - Strap, cargo, tiedown, CGU-1/B (4 each).
  - Felt sheet, cattle hair, Type IV, 1/2-inch or suitable padding.
- **Personnel.** Two persons can prepare and rig this load in 10 minutes.
- **Procedures.** The following procedures apply to this load:
  - **Preparation.** Prepare the load using the following steps:
    - Position the forks so they are sitting on the travel blocks and tilted all the way to the rear.
    - Secure the engine access doors with CGU-1/B tiedown straps.
    - Secure the rear access doors with CGU-1/B tiedown straps.
    - Ensure the front wheels are pointed straight ahead. Tie down the steering wheel using Type III nylon cord.
    - Ensure the fuel tank is not over 3/4 full. Inspect fuel tank cap, oil filler cap, and battery caps for proper installation.
    - Engage the parking brake and place the transmission in neutral.
    - Secure the toolbox lid with Type III nylon cord.
  - **Rigging.** Rig the load according to the steps in Figure 8-26.
  - **Hookup.** Two hookup teams are required for this load. The static discharge person discharges the static electricity. The forward hookup person stands on the front fenders and places apex fitting 1 onto the forward cargo hook. The aft hookup person stands on the engine deck and places apex fitting 2 onto the aft cargo hook. The hookup teams then carefully dismount the load and remain close to the load as the helicopter removes slack from the sling legs. When successful hookup is assured, the hookup teams quickly exit the area underneath the helicopter to the designated rendezvous point.
  - **Derigging.** Derigging is the reverse of the preparation and rigging procedures.

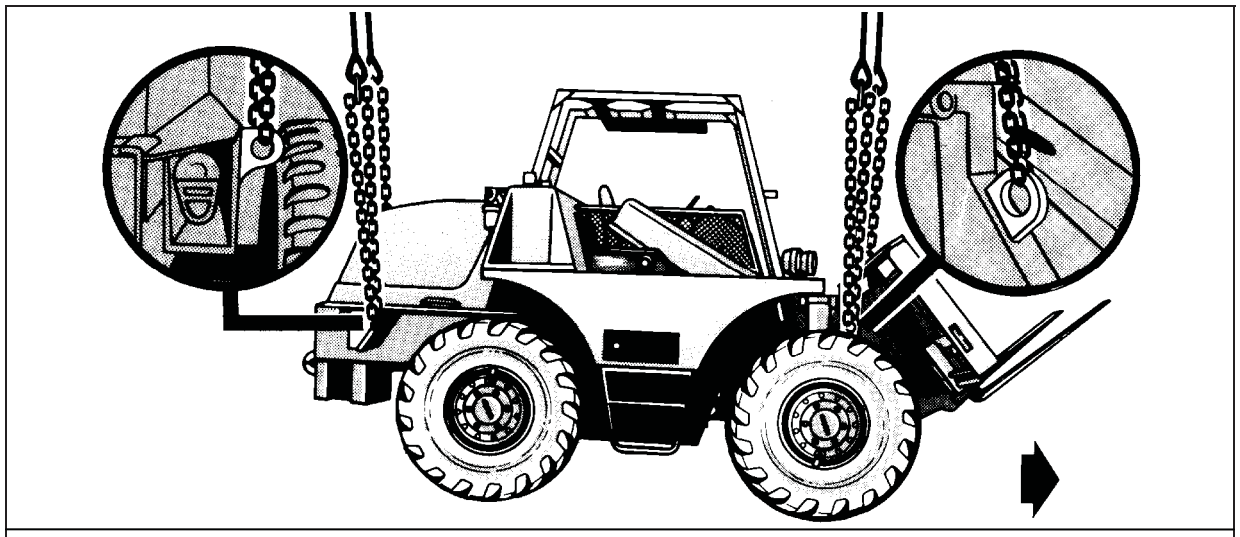

RIGGING STEPS

1. Place two sling legs on apex fitting number 1. Position sling set number 1 on the forward edge of the ROPS.

2. Loop the chain end of the left and right sling legs through their respective lift provisions located on the frame inboard of the top of the front tires. Place the correct link from Table 8-26 in the grab hook.

3. Place two sling legs on apex fitting number 2. Position sling set number 2 on top of the engine deck.

4. Loop the chain end of the left and right sling legs through their respective lift provisions located on the frame aft of the rear tires. Place the correct link from Table 8-26 in the grab hook.

5. Raise the apex fittings above the load. Cluster and tie (breakaway technique) the sling legs in each sling set together to prevent entanglement during hookup and lift-off.

Figure 8-26. Truck, Forklift, MC-6000

EXTENDABLE BOOM FORKLIFT (USMC)

8-28. The extendable boom forklift is rigged for dual-point sling load using the following procedures:

- **Applicability.** The following item in Table 8-27 is certified for the helicopter(s) listed in the following table by the US Army Natick Soldier Center:

Table 8-27. Extendable Boom Forklift

Nomenclature	*Max Weight (Pounds)*	*Sling Set*	*Link Count Front/Rear*	*Type of Aircraft*
Extendable Boom Forklift	25,640	40K	3/40	CH-53

- **Materials.** The following materials are required to rig this load:
  - Sling set (40,000-pound capacity) with one additional apex fitting.
  - Tape, adhesive, pressure-sensitive, 2-inch wide roll.
  - Cord, nylon, Type III, 550-pound breaking strength.

- Webbing, cotton, 1/4-inch, 80-pound breaking strength.
- Strap, cargo, tiedown, CGU-1/B (as required).

- **Personnel.** Two persons can prepare and rig this load in 10 minutes.
- **Procedures.** The following procedures apply to this load:
  - **Preparation.** Prepare the load using the following steps:
    - Secure the forks against the carriage with the CGU-1/B tiedown straps.
    - Ensure the front wheels are pointed straight ahead. Tie down the steering wheel using Type III nylon cord.
    - Ensure the fuel tank is not over 3/4 full. Inspect fuel tank cap, oil filler cap, and battery caps for proper installation.
    - Raise the carriage 10-inches off the ground. Retract and raise the boom.
    - Set the handbrake and place the transmission in neutral.
    - Tape the end of the exhaust pipe.
  - **Rigging.** Rig the load according to the steps in Figure 8-27.
  - **Hookup.** Two hookup teams are required for this load. The static discharge person discharges the static electricity. The forward hookup person stands on the FOPS and places apex fitting 1 onto the forward cargo hook. The aft hookup person stands on the FOPS and places apex fitting 2 onto the aft cargo hook. The hookup teams then carefully dismount the load and remain close to the load as the helicopter removes slack from the sling legs. When successful hookup is assured, the hookup teams quickly exit the area underneath the helicopter to the designated rendezvous point.
  - **Derigging.** Derigging is the reverse of the preparation and rigging procedures.

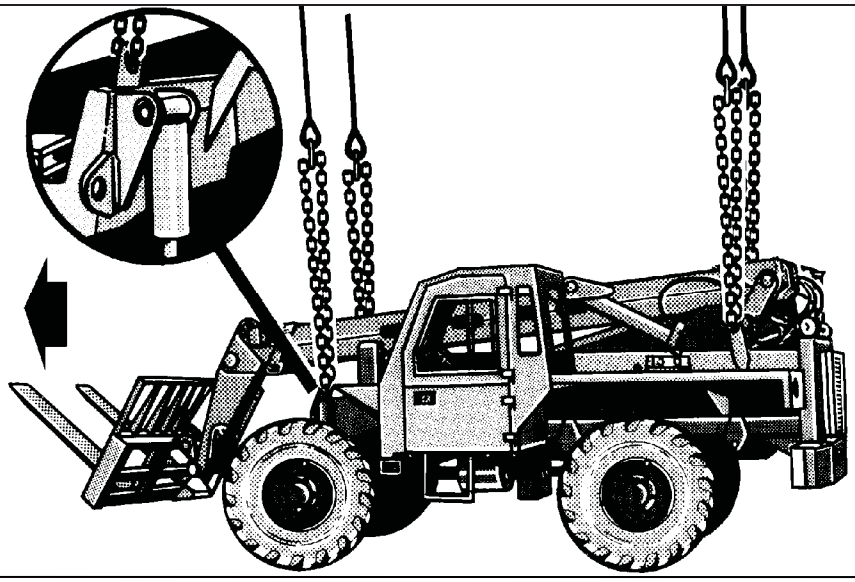

RIGGING STEPS

1. Place two sling legs on apex fitting number 1. Position sling set number 1 on top of the FOPS.

2. Loop the chain end of the left and right sling legs through their respective lift provisions located on the front of the forklift. Place the correct link from Table 8-27 in the grab hook.

Figure 8-27. Extendable Boom Forklift

RIGGING STEPS (Continued)
3. Place two sling legs on apex fitting number 2. Position sling set number 2 on top of the FOPS. 4. Loop the chain end of the left and right sling legs through their respective lift provisions located on the rear of the forklift. Place the correct link from Table 8-27 in the grab hook. Secure the excess chain with tape or Type III nylon cord. 5. Raise the apex fittings above the load. Cluster and tie (breakaway technique) the sling legs in each sling set together to prevent entanglement during hookup and lift-off.

Figure 8-27. Extendable Boom Forklift (Continued)

EXTENDABLE BOOM FORKLIFT (EBFL) (NEW VERSION) (USMC)

8-29. The extendable boom forklift (new version) is rigged for dual-point sling load using the following procedures:

- **Applicability.** The following item in Table 8-28 is certified for the helicopter(s) listed in the following table by the US Army Natick Soldier Center:

Table 8-28. Extendable Boom Forklift (New Version)

Nomenclature	*Max Weight (Pounds)*	*Sling Set*	*Link Count Front/Rear*	*Type of Aircraft*
Extendable Boom Forklift (EBFL)	28,400	40K	3/48 Cab Side 3/50 Boom Side	CH-53

- **Materials.** The following materials are required to rig this load:
  - Sling set (40,000-pound capacity).
  - Tape, adhesive, pressure-sensitive, 2-inch wide roll.
  - Cord, nylon, Type III, 550-pound breaking strength.
  - Webbing, cotton, 1/4-inch, 80-pound breaking strength.
  - Tiedown strap, cargo, CGU-1/B (as required).
- **Personnel.** Two persons can prepare and rig each load in 10 minutes.
- **Procedures.** The following procedures apply to this load:
  - **Preparation.** Prepare the load using the following steps:
    - Secure the forks against the carriage using the CGU-1/Bs.
    - Set the parking brake.
    - Place the gear selector lever in neutral.
    - Tape the exhaust pipe end.
    - Lower the boom and tilt the forks all the way back.
    - Secure all latches on the windows with tape or Type III nylon cord.
    - Tape the windshield wipers to the windshield.
    - Tape all lights and mirrors.
    - Secure all equipment in the cab with tape or Type III nylon cord.
    - Ensure the wheels are pointed straight ahead and secure the steering wheel with Type III nylon cord.
    - Secure the engine cover with Type III nylon cord.
  - **Rigging.** Rig the load according to the steps in Figure 8-28.

- **Hookup.** Two hookup teams stand on the side of the load. The static discharge person discharges the static electricity. The forward hookup person places apex fitting 1 onto the forward cargo hook. The aft hookup person places apex fitting 2 onto the aft cargo hook. The hookup teams then carefully dismount the container and remain close to the load as the helicopter removes slack from the sling legs. When successful hookup is assured, the hookup teams quickly exit the area underneath the helicopter to the designated rendezvous point.
- **Derigging.** Derigging is the reverse of the preparation and rigging procedures.

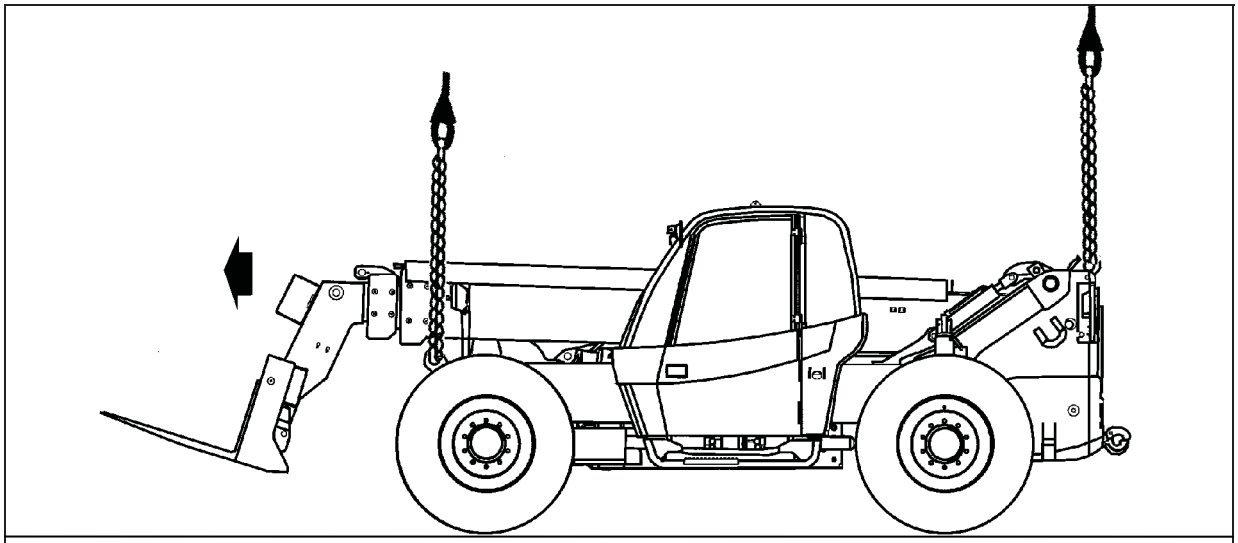

RIGGING STEPS

1. Connect 2 sling legs to apex fitting number 1. Position the apex fitting on the boom in front of the cab.
2. Loop the chain end of the sling legs through their respective lift provisions on the front of the vehicle. Place the correct link from Table 8-28 in the grab hook.
3. Connect 2 sling legs to apex fitting number 2. Position the apex fitting on the boom behind the cab.
4. Loop the chain end of the sling legs through their respective lift provisions on the rear of the vehicle. Place the correct link from Table 8-28 in the grab hook.
5. Secure all excess chain with tape or Type III nylon cord.
6. Cluster and tie (breakaway technique) the sling legs in each sling set on top of the vehicle to prevent entanglement during hookup and lift-off.

Figure 8-28. Extendable Boom Forklift (EBFL) (New Version)

LIGHT ROUGH TERRAIN FORKLIFT (LRTF) (USMC)

8-30. The light rough terrain forklift is rigged for dual-point sling load using the following procedures:

- **Applicability.** The following item in Table 8-29 is certified for the helicopter(s) listed in the following table by the US Army Natick Soldier Center:

Table 8-29. Light Rough Terrain Forklift

Nomenclature	*Max Weight (Pounds)*	*Sling Set*	*Link Count Front/Rear*	*Type of Aircraft*
Light Rough Terrain Forklift (LRTF)	13,700	15K	3/25 Cab Side 3/30 Boom Side	CH-53

- **Materials.** The following materials are required to rig this load:
  - Sling set (15,000-pound capacity).
  - Tape, adhesive, pressure-sensitive, 2-inch wide roll.
  - Cord, nylon, Type III, 550-pound breaking strength.
  - Webbing, cotton, 1/4-inch, 80-pound breaking strength.
  - Tie-down strap, cargo, CGU-1/B (as required).
- **Personnel.** Two persons can prepare and rig each load in 10 minutes.
- **Procedures.** The following procedures apply to this load:
  - **Preparation.** Prepare the load using the following steps:
    - Slide and secure the forks together in the middle of the carriage using CGU-1/Bs.
    - Set the parking brake.
    - Place the gear selector lever in neutral.
    - Tape the exhaust pipe end.
    - Secure all latches on the windows with tape or Type III nylon cord.
    - Tape the windshield wipers to the windshield.
    - Tape all lights and mirrors.
    - Secure all equipment in the cab with tape or Type III nylon cord.
    - Ensure the wheels are pointed straight ahead and secure the steering wheel with Type III nylon cord.
    - Secure the engine cover with Type III nylon cord.
  - **Rigging.** Rig the load according to the steps in Figure 8-29.
  - **Hookup.** Two hookup teams stand on the side of the load. The static discharge person discharges the static electricity. The forward hookup person places apex fitting 1 onto the forward cargo hook. The aft hookup person places apex fitting 2 onto the aft cargo hook. The hookup teams then carefully dismount the container and remain close to the load as the helicopter removes slack from the sling legs. When successful hookup is assured, the hookup teams quickly exit the area underneath the helicopter to the designated rendezvous point.
  - **Derigging.** Derigging is the reverse of the preparation and rigging procedures.

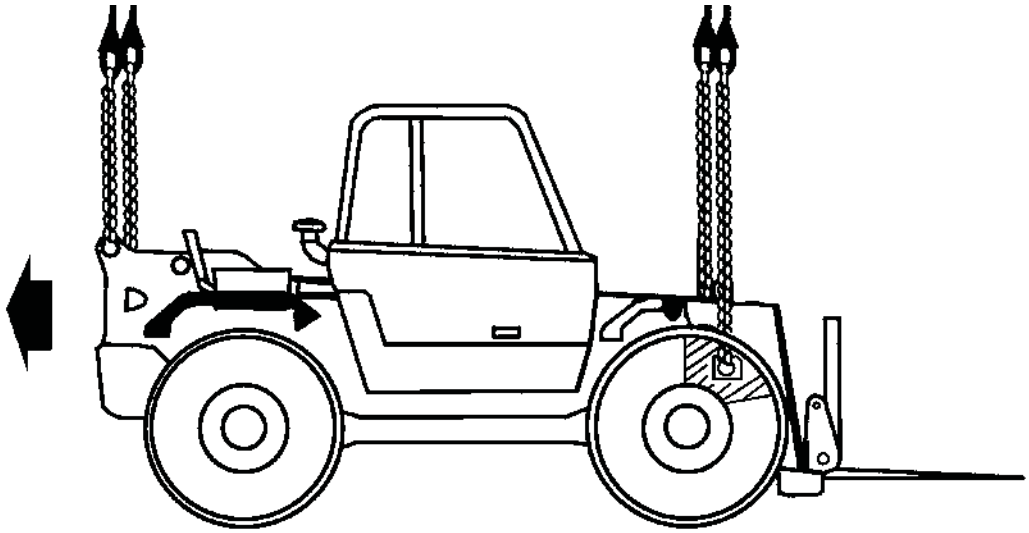

RIGGING STEPS

1. Connect 2 sling legs to apex fitting number 1. Position the apex fitting on the boom in front of the cab.

2. Loop the chain end of the sling legs through their respective lift provisions on the front of the vehicle. Place the correct link from Table 8-29 in the grab hook.

3. Connect 2 sling legs to apex fitting number 2. Position the apex fitting on the boom behind the cab.

4. Loop the chain end of the sling legs through their respective lift provisions on the rear of the vehicle. Place the correct link from Table 8-29 in the grab hook.

5. Secure all excess chain with tape or Type III nylon cord.

6. Cluster and tie (breakaway technique) the sling legs in each sling set on top of the vehicle to prevent entanglement during hookup and lift-off.

Figure 8-29. Light Rough Terrain Forklift

BOAT, BRIDGE, ERECTION

8-31. The boat, bridge, erection is rigged for dual-point sling load using the following procedures:

- **Applicability.** The following item in Table 8-30 is certified for the helicopter(s) listed in the following table by the US Army Natick Soldier Center:

Table 8-30. Boat, Bridge, Erection

Nomenclature	*Max Weight (Pounds)*	*Sling Set*	*Link Count Front/Rear*	*Type of Aircraft*
Boat, Bridge, Erection	6,000	15K	4/8	CH-53

CAUTION

This load becomes extremely unstable at airspeeds above 30 knots.

- **Materials.** The following materials are required to rig this load:
  - Sling set (15,000-pound capacity) (2 each).
  - Tape, adhesive, pressure-sensitive, 2-inch wide roll.
  - Cord, nylon, Type III, 550-pound breaking strength.
  - Webbing, cotton, 1/4-inch, 80-pound breaking strength.
- **Personnel.** Two persons can prepare and rig this load in 15 minutes.
- **Procedures.** The following procedures apply to this load:
  - **Preparation.** Prepare the load using the following steps:
    - Remove the canvas cover and stow in the rear (stern) section.
    - Secure all loose equipment with tape or Type III nylon cord.
    - Attach the front section to the rear section of the boat.
    - Tape all glass items, lights, and reflectors.
    - Ensure both cradles are not attached to the boat sections.
  - **Rigging.** Rig the load according to the steps in Figure 8-30.

Note. When using the 15,000-pound capacity multileg sling set, tie or tape the inner sling legs to the outer sling legs.

  - **Hookup.** Two hookup teams are required for this load. The static discharge person discharges the static electricity. The forward hookup person stands on top of the stern section and places apex fitting 2 onto the forward cargo hook. The aft hookup person stands on top of the bow and places apex fitting 1 onto the aft cargo hook. The hookup teams then carefully dismount the load and remain close to the load as the helicopter removes slack from the sling legs. When successful hookup is assured, the hookup teams quickly exit the area underneath the helicopter to the designated rendezvous point.

Note. Brief the helicopter crew to relax the sling leg tension and hover to the side before releasing the web ring to prevent damaging the boat.

  - **Derigging.** Derigging is the reverse of the preparation and rigging procedures.

RIGGING STEPS
1. Position web ring number 1 on top of the front (bow) section of the boat. 2. Loop the chain end of the left and right sling legs through their respective lifting bolts located on the left and right side of the forward end of the stern section. Place the correct link from Table 8-30 in the grab hook. 3. Position web ring number 2 on top of the aft (stern) section of the boat. Route the sling leg chains to the aft (stern) side of the horizontal arms of the towing bitt. 4. Wrap the chain end of the left sling leg two times around the vertical post of the towing bitt. Wrap the chain end of the right sling leg in the opposite direction two times around the vertical post of the towing bitt. Ensure the chain wraps are below the horizontal bars on the towing bitt. Place the correct link from Table 8-30 in the grab hook. 5. Raise the apex fittings above the load. Cluster and (breakaway technique) the sling legs in each sling set together to prevent entanglement during hookup and lift-off.

Figure 8-30. Boat, Bridge Erection

RIBBON BRIDGE ERECTION BOAT, MK2

8-32. The ribbon bridge erection boat, MK2 is rigged for dual-point sling load using the following procedures:

- **Applicability.** The following item in Table 8-31 is certified for the helicopter(s) listed in the following table by the US Army Natick Soldier Center:

Table 8-31. Ribbon Bridge Erection Boat, MK2

Nomenclature	*Max Weight (Pounds)*	*Sling Set*	*Link Count Front/Rear*	*Type of Aircraft*
Ribbon Bridge Erection Boat, MK2	9,040	10K 15K	10/5	CH-47 CH-53

- **Materials.** The following materials are required to rig this load:
  - Sling set (15,000-pound capacity) (2 each).

    OR
  - Sling set (10,000-pound capacity) with one additional apex fitting.
  - Tape, adhesive, pressure-sensitive, 2-inch wide roll.
  - Cord, nylon, Type III, 550-pound breaking strength.
  - Webbing, cotton, 1/4-inch, 80-pound breaking strength.
  - Clevis assembly, medium, MS70087-2, or clevis assembly, large, MS70087-3 (4 each).
- **Personnel.** Two persons can prepare and rig this load in 20 minutes.
- **Procedures.** The following procedures apply to this load:
  - **Preparation.** Prepare the load using the following steps:
    - Lower and secure the antenna.
    - Remove the cab.

Note. Do not sling load the boat with the cab installed.

    - Secure all loose equipment with tape or Type III nylon cord.
    - Secure all hatches and panels with padlocks or a double length of Type III nylon cord. Secure the jet hatches with padlocks or a double length of Type III nylon cord and anchor cleats.
    - Tape the mast assembly upper stowage pin.
    - Attach four clevises to the four boat lifting points (triangular structures with holes) mounted on the boat side rails. The front lifting points are approximately 8.5 feet from the front of the boat. The rear lifting points are approximately 7.5 feet from the rear of the boat.
  - **Rigging.** Rig the load according to the steps in Figure 8-31.

Note. When using the 15,000-pound capacity multileg sling set, tie or tape the inner sling legs to the outer sling legs.

  - **Hookup.** Two hookup teams are required for this load. The static discharge person discharges the static electricity. The forward hookup person stands in the bow of the boat and places apex fitting 1 onto the forward cargo hook. The aft hookup person stands in the stern of the boat and places apex fitting 2 onto the aft cargo hook. The hookup teams then carefully dismount the load and remain close to the load as the helicopter removes slack from the sling legs. When successful hookup is assured, the hookup teams quickly exit the area underneath the helicopter to the designated rendezvous point.
  - **Derigging.** Derigging is the reverse of the preparation and rigging procedures.

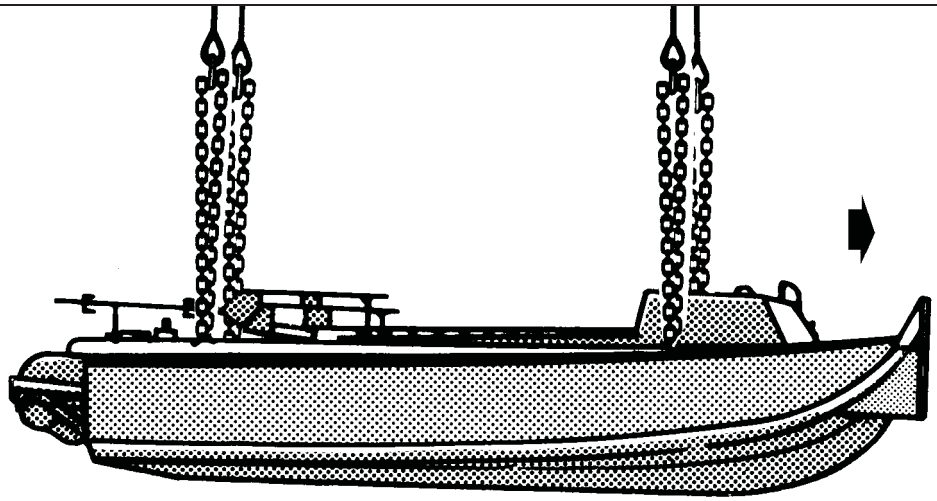

RIGGING STEPS

1. Place two sling legs on apex fitting number 1. Position sling set number 1 on the front of the boat.

2. Loop the chain end of the left and right sling legs through their respective lift provisions located on the front of the boat. Place the correct link from Table 8-31 in the grab hook. Secure the excess chain with tape or Type III nylon cord.

3. Place two sling legs on apex fitting number 2. Position sling set number 2 on the rear of the boat.

4. Loop the chain end of the left and right sling legs through their respective lift provisions located on the rear of the boat. Place the correct link from Table 8-31 in the grab hook.

5. Raise the apex fittings above the load. Cluster and tie (breakaway technique) the sling legs in each sling set together to prevent entanglement during hookup and lift-off.

Figure 8-31. Ribbon Bridge Erection Boat, MK2

RIBBON BRIDGE INTERIOR BAY

8-33. The ribbon bridge interior bay is rigged for dual-point sling load using the following procedures:

- **Applicability.** The following item in Table 8-32 is certified for the helicopter(s) listed in the following table by the US Army Natick Soldier Center:

Table 8-32. Ribbon Bridge Erection Boat, MK2

Nomenclature	*Max Weight (Pounds)*	*Sling Set*	*Link Count Front/Rear*	*Type of Aircraft*
Ribbon Bridge, Interior Bay	11,800	25K 15K	3/50	CH-47 CH-53
Ribbon Bridge, Interior Bay, Improved	13,860	25K 15K	3/50	CH-47 CH-53

- **Materials.** The following materials are required to rig this load:
  - Sling set (15,000-pound capacity) (2 each).

    OR
  - Sling set (25,000-pound capacity) with one additional apex fitting.
  - Tape, adhesive, pressure-sensitive, 2-inch wide roll.
  - Cord, nylon, Type III, 550-pound breaking strength.
  - Webbing, cotton, 1/4-inch, 80-pound breaking strength.
- **Personnel.** Two persons can prepare and rig this load in 15 minutes.
- **Procedures.** The following procedures apply to this load:
  - **Preparation.** Prepare the load using the following steps:
    - The end with the roadway lock is the front of the load.
    - Ensure all the bay latches are securely fastened.
  - **Rigging.** Rig the load according to the steps in Figure 8-32.

Note. When using the 15,000-pound capacity multileg sling set, tie or tape the inner sling legs to the outer sling legs.

- **Hookup.** Two hookup teams are required for this load. The static discharge person discharges the static electricity. The forward hookup person stands on top of the bridge and places apex fitting 1 onto the forward cargo hook. The aft hookup person stands on top of the bridge and places apex fitting 2 onto the aft cargo hook. The hookup teams then carefully dismount the load and remain close to the load as the helicopter removes slack from the sling legs. When successful hookup is assured, the hookup teams quickly exit the area underneath the helicopter to the designated rendezvous point.
- **Derigging.** Derigging is the reverse of the preparation and rigging procedures.

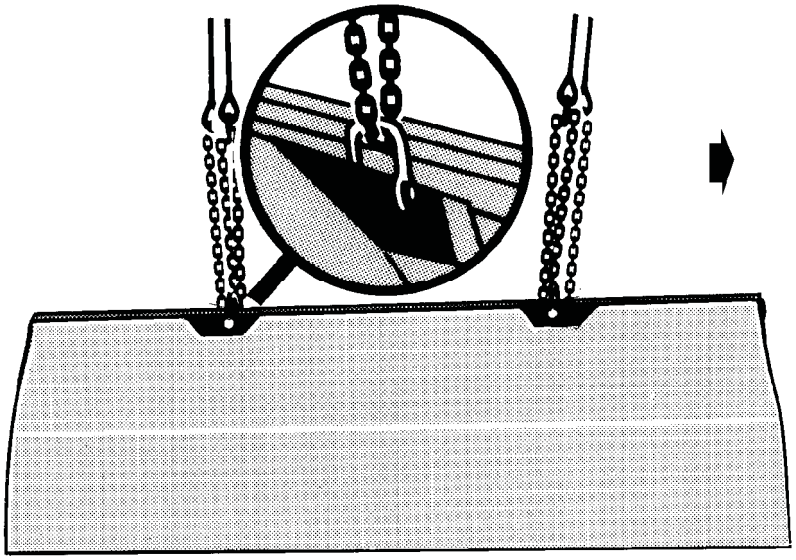

RIGGING STEPS

1. Place two sling legs on apex fitting number 1. Position sling set number 1 on top of the interior bay.

Figure 8-32. Ribbon Bridge Interior Bay

RIGGING STEPS (Continued)
2. Loop the chain end of the left and right sling legs through their respective lift provisions (a pin located between two plates on the top edge of the bay). Place the correct link from Table 8-32 in the grab hook. 3. Place two sling legs on apex fitting number 2. Position sling set number 2 on top of the bay at the rear. 4. Loop the chain end of the left and right sling legs through their respective lift provisions (a pin located between two plates at the top rear edge). Place the correct link from Table 8-32 in the grab hook. Secure the excess chain with tape or Type III nylon cord. 5. Pull the chain of each sling leg up tightly and tape or tie just above the lift provision. 6. Raise the apex fittings above the load. Cluster and tie (breakaway technique) the sling legs in each sling set together to prevent entanglement during hookup and lift-off.

Figure 8-32. Ribbon Bridge Interior Bay (Continued)

RIBBON BRIDGE RAMP BAY

8-34. The ribbon bridge ramp bay is rigged for dual-point sling load using the following procedures:

- **Applicability.** The following item in Table 8-33 is certified for the helicopter(s) listed in the following table by the US Army Natick Soldier Center:

Table 8-33. Ribbon Bridge Ramp Bay

Nomenclature	*Max Weight (Pounds)*	*Sling Set*	*Link Count Front/Rear*	*Type of Aircraft*
Ribbon Bridge, Ramp Bay	11,560	25K 15K	3/50	CH-47 CH-53
Ribbon Bridge, Ramp Bay, Improved	13,270	25K 15K	3/50	CH-47 CH-53

- **Materials.** The following materials are required to rig this load:
  - Sling set (15,000-pound capacity) (2 each).

    OR
  - Sling set (25,000-pound capacity) with one additional apex fitting.
  - Tape, adhesive, pressure-sensitive, 2-inch wide roll.
  - Cord, nylon, Type III, 550-pound breaking strength.
  - Webbing, cotton, 1/4-inch, 80-pound breaking strength.
- **Personnel.** Two persons can prepare and rig this load in 15 minutes.
- **Procedures.** The following procedures apply to this load:
  - **Preparation.** Prepare the load using the following steps:
    - The short end of the bay is the front of the load.
    - Ensure all the bay latches are securely fastened.
  - **Rigging.** Rig the load according to the steps in Figure 8-33.

Note. When using the 15,000-pound capacity multileg sling set, tie or tape the inner sling legs to the outer sling legs.

- **Hookup.** Two hookup teams are required for this load. The static discharge person discharges the static electricity. The forward hookup person stands on top of the ramp bay and places apex fitting 1 onto the forward cargo hook. The aft hookup person stands on top of the ramp bay and places apex fitting 2 onto the aft cargo hook. The hookup teams then carefully dismount the load and remain close to the load as the helicopter removes slack from the sling legs. When successful hookup is assured, the hookup teams quickly exit the area underneath the helicopter to the designated rendezvous point.
- **Derigging.** Derigging is the reverse of the preparation and rigging procedures.

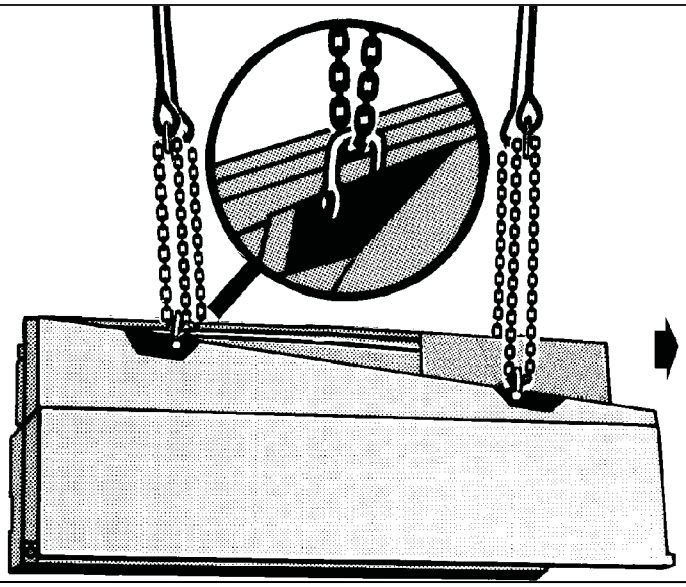

RIGGING STEPS

1. Place two sling legs on apex fitting number 1. Position sling set number 1 on top of the front of the ramp bay.
2. Loop the chain end of the left and right sling legs through their respective lift provisions (a pin located between two plates on the top edge of the bay). Place the correct link from Table 8-33 in the grab hook.
3. Place two sling legs on apex fitting number 2. Position sling set number 2 on top of the ramp bay at the rear.
4. Loop the chain end of the left and right sling legs through their respective lift provisions (a pin located between two plates at the top rear edge). Place the correct link from Table 8-33 in the grab hook. Secure the excess chain with tape or Type III nylon cord.
5. Pull the chain of each sling leg up tightly and tape or tie just above the lift provision.
6. Raise the apex fittings above the load. Cluster and tie (breakaway technique) the sling legs in each sling set together to prevent entanglement during hookup and lift-off.

Figure 8-33. Ribbon Bridge, Ramp Bay

MEDIUM GIRDER BRIDGE (MGB) (USMC)

8-35. The medium girder bridge is rigged for dual-point sling load using the following procedures:

- **Applicability.** The following item in Table 8-34 is certified for the helicopter(s) listed in the following table by the US Army Natick Soldier Center:

Table 8-34. Medium Girder Bridge

Nomenclature	*Max Weight (Pounds)*	*Sling Set*	*Link Count Front/Rear*	*Type of Aircraft*
Medium Girder Bridge, Five Bay, Double Story, One End, Undecked, with Building Frame and Launching Nose	18,240	40K	5/5	CH-53

CAUTION

Due to the extreme length of this load the aircraft radar altimeter becomes unreliable. Ensure the pilots are notified prior to pickup.

- **Materials.** The following materials are required to rig this load:
  - Sling set (40,000-pound capacity) with one additional apex fitting.
    - Additional chain lengths, part number 607050 (4 each).
    - Additional coupling links, part number 577-0815 (4 each).
  - Tape, adhesive, pressure-sensitive, 2-inch wide roll.
  - Cord, nylon, Type III, 550-pound breaking strength.
  - Webbing, cotton, 1/4-inch, 80-pound breaking strength.
  - Strap, cargo, tiedown, CGU-1/B (8 each).
  - Tiedown assembly, chain, MB-1 (12 each).
  - Fire hose, 2 1/2-inch or larger, 8-feet long (12 each).
- **Personnel.** Four persons can prepare and rig this load in 15 minutes.
- **Procedures.** The following procedures apply to this load:
  - **Preparation.** Prepare the load using the following steps:
    - Ensure the launching nose is snug against the Bankseat Beam located on the front of the bridge.
    - Ensure all tiedown chains and straps are tight and the hydraulic jacks are safety wired in place.
    - Tape all ratchets and chain tensioners.
    - Attach an additional chain length to each sling leg chain using the coupling links.
    - Slide an 8-foot length of fire hose on each sling leg chain.
  - **Rigging.** Rig the load according to the steps in Figure 8-34.
  - **Hookup.** Two hookup teams are required for this load. The static discharge person discharges the static electricity. The forward hookup person stands on the left girder and places apex fitting 1 onto the forward cargo hook. The aft hookup person stands on the left girder and places apex fitting 2 onto the aft cargo hook. The hookup teams then carefully dismount the load and remain close to the load as the helicopter removes slack from the sling legs. When successful hookup is assured, the hookup teams quickly exit the area underneath the helicopter to the designated rendezvous point.
  - **Derigging.** Derigging is the reverse of the preparation and rigging procedures.

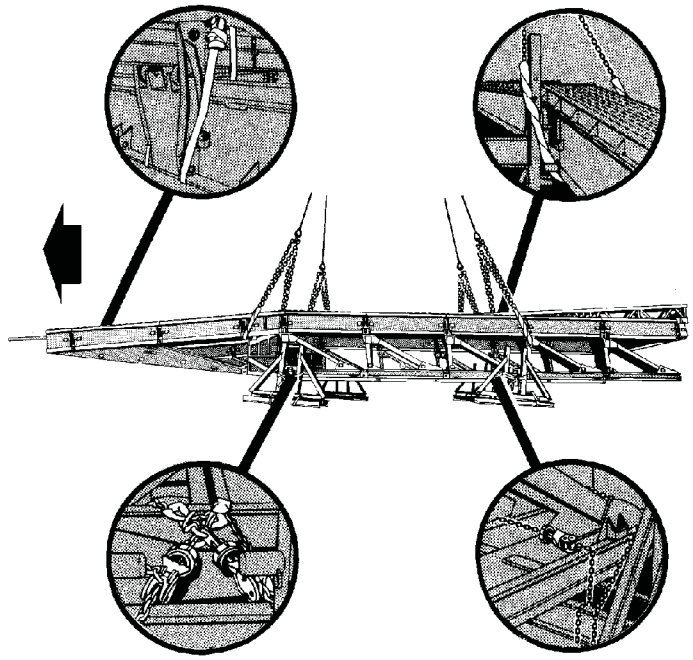

RIGGING STEPS

1. Place two sling legs on apex fitting number 1. Position sling set number 1 on top of the front (sloped end) of the bridge.

2. Route the left sling leg to the front of the bridge. Loop the chain end around the joint between the junction panels and the first sloping top panel. Ensure the chain loops around each launching nose girder post. Place the correct link from Table 8-34 in the grab hook. Repeat on the right side with the right sling leg.

3. Place two sling legs on apex fitting number 2. Position sling set number 2 on top of the bridge at the rear.

4. Route the left sling leg to the rear of the bridge. Loop the chain end of the left sling leg around the joint on the second bottom panel from the end formed by the vertical beam and the diagonal beam (DO NOT LOOP THE CHAIN AT THE JOINT BETWEEN THE TOP AND BOTTOM PANELS). Place the correct link from Table 8-34 in the grab hook. Repeat on the right side with the right sling leg.

5. Raise the apex fittings above the load. Cluster and tie (breakaway technique) the sling legs in each sling set together to prevent entanglement during hookup and lift-off.

Figure 8-34. Medium Girder Bridge

DRY SUPPORT BRIDGE ON M1077 FLATRACK

8-36. The dry support bridge on M1077 flatrack is rigged for dual-point sling load using the following procedures:

- **Applicability.** The following items in Table 8-35 are certified for the helicopter(s) listed in the following table by the US Army Natick Soldier Center:

Table 8-35. Dry Support Bridge on M1077 Flatrack

Nomenclature	*Max Weight (Pounds)*	*Sling Set*	*Link Count Front/Rear*	*Type of Aircraft*
Dry Support Bridge Flatrack LVT (Launch Beams and Basket)	13,800	25K	3/10	CH-47
Dry Support Bridge Flatrack T1 (Ramp Module, Approach Ramp, and End Beam	19,300	25K	3/10	CH-47
Dry Support Bridge Flatrack T2 (Two Parallel Modules)	23,050	25K	3/10	CH-47
Dry Support Bridge Flatrack V1 (Parallel Module and Ramp Module)	22,500	25K	3/10	CH-47
Dry Support Bridge Flatrack V2 (Two Parallel Modules)	23,050	25K	3/10	CH-47

- **Materials.** The following materials are required to rig this load:
  - Sling set (25,000-pound capacity) with one additional apex fitting.
    - Chain length, part number 38850-00053-102, from a 25,000-pound capacity sling set (8 each).
    - Coupling link, part number 9779135, from a 25,000-pound capacity sling set (8 each).
  - Tape, adhesive, pressure-sensitive, 2-inch wide roll.
  - Cord, nylon, Type III, 550-pound breaking strength.
  - Webbing, cotton, 1/4-inch, 80-pound breaking strength.
  - Tiedown straps (components of the flatrack system).
- **Personnel.** Four persons can prepare and rig this load in 15 minutes.
- **Procedures.** The following procedures apply to this load:

Note. The dry support bridge modules must be securely fastened to the M1077 flatrack.

  - **Preparation.** Prepare the load using the following steps:
    - Ensure the tension devices on the tiedown straps do not interfere with the routing of the sling legs.
    - Secure all wires and cables with tape.
    - Secure all doors and caps with tape or Type III nylon cord.
    - Ensure the ladder and other equipment on the T1 module is properly stowed and secured.
    - Attach two additional chain lengths to each sling leg chain using the coupling links.
  - **Rigging.** Rig the load according to the steps in Figure 8-35.
  - **Hookup.** Two hookup teams are required for this load. The static discharge person discharges the static electricity. The forward hookup person stands on top of the load and places apex fitting 1 onto the forward cargo hook. The aft hookup person stands on top of the load and places apex fitting 2 onto the aft cargo hook. The hookup teams then carefully dismount the load and remain close to the load as the helicopter removes slack from the sling legs. When successful hookup is assured, the hookup teams quickly exit the area underneath the helicopter to the designated rendezvous point.
  - **Derigging.** Derigging is the reverse of the preparation and rigging procedures.

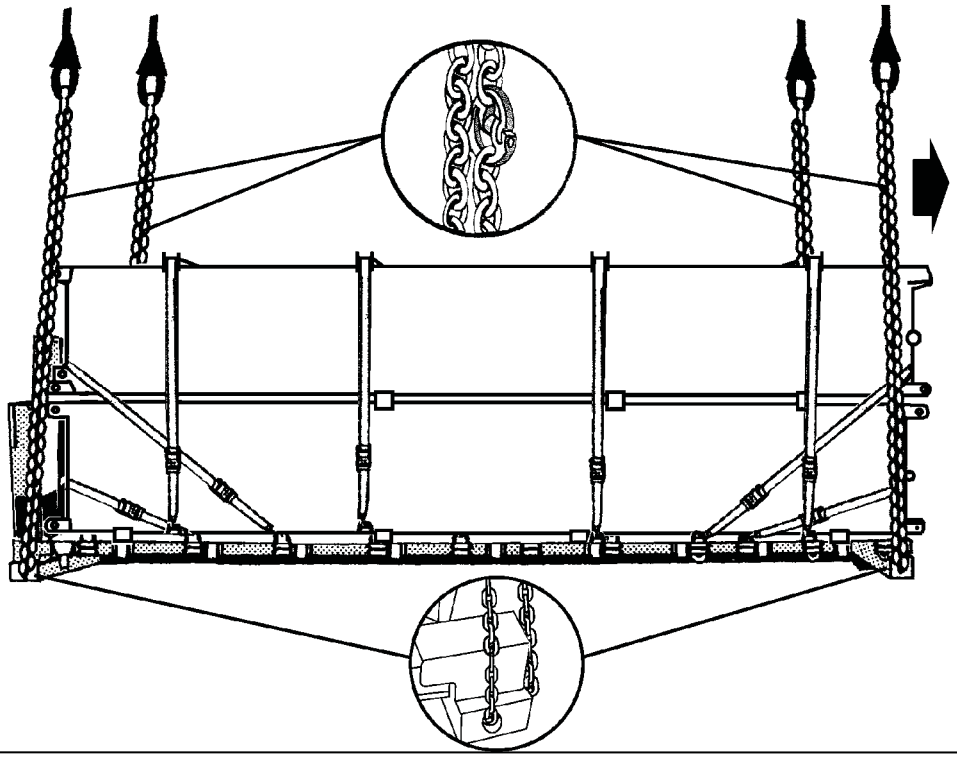

RIGGING STEPS

1. Place two sling legs on apex fitting number 1. Position sling set number 1 on top of the front of the bridge.

2. Route the chain end through the left front ISO fittings on the corner of the M1077 flatrack. Place the correct link from Table 8-35 in the grab hook. Repeat on the right side with the right sling leg.

3. Place two sling legs on apex fitting number 2. Position sling set number 2 on top of the bridge at the rear.

4. Route the chain end through the left rear ISO fittings on the corner of the M1077 flatrack. Place the correct link from Table 8-35 in the grab hook. Repeat on the right side with the right sling leg.

5. Raise the apex fittings above the load. Cluster and tie (breakaway technique) the sling legs in each sling set together to prevent entanglement during hookup and lift-off. Tie the front legs together with Type III nylon cord. Tie the rear legs to the A-frame toolboxes with Type III nylon cord.

Figure 8-35. Dry Support Bridge on M1077 Flatrack

SRS-106 INTEGRATED TOWER SYSTEMS PORTABLE TOWER TRAILER (PTT)

8-37. The SRS-106 integrated tower systems portable tower trailer is rigged for dual-point sling load using the following procedures:

- **Applicability.** The following item in Table 8-36 is certified for the helicopter(s) listed in the following table by the US Army Natick Soldier Center:

Table 8-36. SRS-106 Integrated Tower Systems Portable Tower Trailer

Nomenclature	*Max Weight (Pounds)*	*Sling Set*	*Link Count Front/Rear*	*Type of Aircraft*
SRS-106 Integrated Tower Systems Portable Tower Trailer	10,000	10K	40/3	CH-47

- **Materials.** The following materials are required to rig this load:
  - Sling set (10,000-pound capacity) with one additional apex fitting.
  - Tape, adhesive, pressure-sensitive, 2-inch wide roll.
  - Cord, nylon, Type III, 550-pound breaking strength.
  - Webbing, cotton, 1/4-inch, 80-pound breaking strength.
- **Personnel.** Two persons can prepare and rig this load in 15 minutes.
- **Procedures.** The following procedures apply to this load:
  - **Preparation.** Prepare the load using the following steps:
    - Configure the trailer for transport with tower stowed and secured, outriggers retracted and stowed, and the rear support jacks stowed. Secure all jack handles with tape and secure the screw that stows the outriggers with Type III nylon cord so the screw cannot be turned.
    - Place the front support jack in the fully retracted position, do not stow. Ensure the jack base plate is in position and secure the cotter pin with tape.
    - Engage the trailer parking brake.
    - Secure all loose equipment in the storage boxes and secure the boxes closed.
    - Stow the remaining support jack base plates and secure the cotter pin with tape.
    - Secure the safety chains, emergency brake actuation lanyard, and electrical cable to the trailer tongue with tape.
    - Cover all lights and reflectors with tape.
  - **Rigging.** Rig the load according to the steps in Figure 8-36.
  - **Hookup.** Two hookup teams are required for this load. The static discharge person discharges the static electricity. The forward hookup person stands on the rear of the trailer and places apex fitting 2 onto the forward cargo hook. The aft hookup person stands on the front of the trailer and places apex fitting 1 onto the aft cargo hook. The hookup teams then carefully dismount the load and remain close to the load as the helicopter removes slack from the sling legs. When successful hookup is assured, the hookup teams quickly exit the area underneath the helicopter to the designated rendezvous point.
  - **Derigging.** Derigging is the reverse of the preparation and rigging procedures.

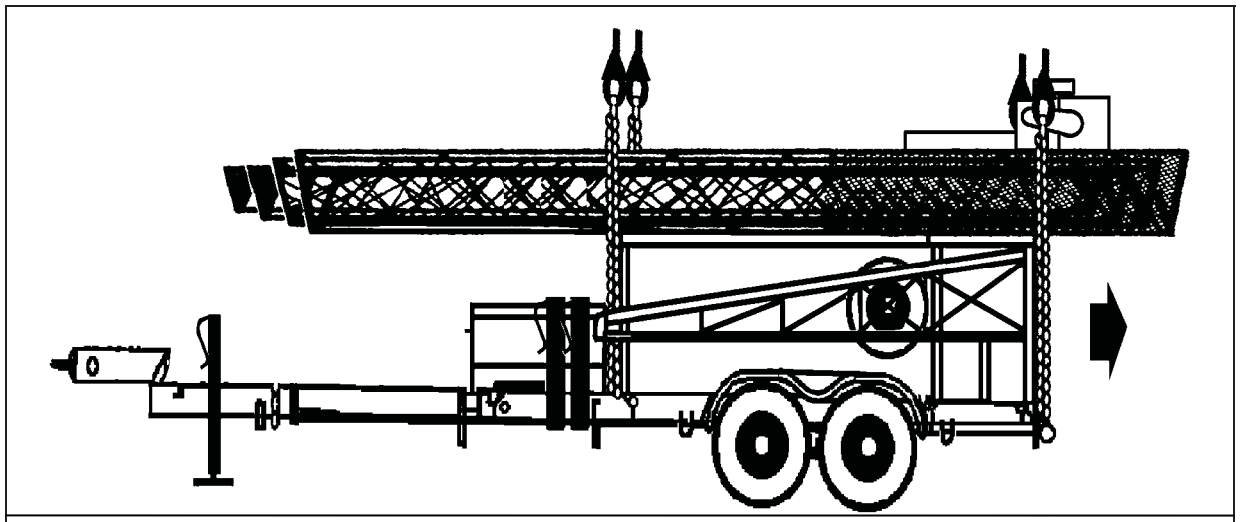

RIGGING STEPS

1. Place two sling legs on apex fitting number 1. Position sling set number 1 on top of the tower on the front (lunette end) of the trailer

2. Loop the chain end of the left and right sling legs over the storage boxes and inboard of the outriggers to the front lift provisions. Place the correct link from Table 8-36 in the grab hook.

3. Place two sling legs on apex fitting number 2. Position sling set number 2 on top of the tower at the rear of the trailer.

4. Loop the chain end of the left and right sling legs through their respective lift provisions located on the rear of the trailer. Route the rear left sling to the outside of the control box and secure the chain to the frame with a ¼-inch cotton webbing breakaway tie. Place the correct link from Table 8-36 in the grab hook. Secure the excess chain with tape or Type III nylon cord.

5. Pull the chain of each sling leg up tightly and tape or tie just above the lift provision.

6. Raise the apex fittings above the load. Cluster and tie (breakaway technique) the sling legs in each sling set together to prevent entanglement during hookup and lift-off.

Figure 8-36. SRS-106 Integrated Tower Systems Portable Tower Trailer

M4 ROBOTIC MINE FLAIL

8-38. The M4 robotic mine flail is rigged for dual-point sling load using the following procedures:

- **Applicability.** The following item in Table 8-37 is certified for the helicopter(s) listed in the following table by the US Army Natick Soldier Center:

Table 8-37. M4 Robotic Mine Flail

Nomenclature	*Max Weight (Pounds)*	*Sling Set*	*Link Count Front/Rear*	*Type of Aircraft*
M4 Robotic Mine Flail	12,440	25K	30/3	CH-47

- **Materials.** The following materials are required to rig this load:
  - Sling set (25,000-pound capacity) with one additional apex fitting.
  - Tape, adhesive, pressure-sensitive, 2-inch wide roll.
  - Cord, nylon, Type III, 550-pound breaking strength.
  - Webbing, cotton, 1/4-inch, 80-pound breaking strength.
- **Personnel.** Two persons can prepare and rig this load in 15 minutes.
- **Procedures.** The following procedures apply to this load:
  - **Preparation.** Prepare the load using the following steps:
    - Position the vehicle with the rear of the vehicle pointed into the wind.
    - Ensure the fuel tank is not over 3/4 full. Inspect the fuel tank cap, oil filter cap, and the battery caps for proper installation.
    - Engage the parking brake and place the transmission in neutral.
    - Remove and store the fire extinguisher and all antennae inside or on top of the vehicle. Secure with Type III nylon cord.
    - Pad the emergency control section with felt, or a suitable substitute material and secure with tape. Tie the cover with Type III nylon cord.
  - **Rigging.** Rig the load according to the steps in Figure 8-37.
  - **Hookup.** Two hookup teams are required for this load. The static discharge person discharges the static electricity. The forward hookup person stands on top of the load and places apex fitting 2 onto the forward cargo hook. The aft hookup person stands on the front of the trailer and places apex fitting 1 onto the aft cargo hook. The hookup teams then carefully dismount the load and remain close to the load as the helicopter removes slack from the sling legs. When successful hookup is assured, the hookup teams quickly exit the area underneath the helicopter to the designated rendezvous point.
  - **Derigging.** Derigging is the reverse of the preparation and rigging procedures.

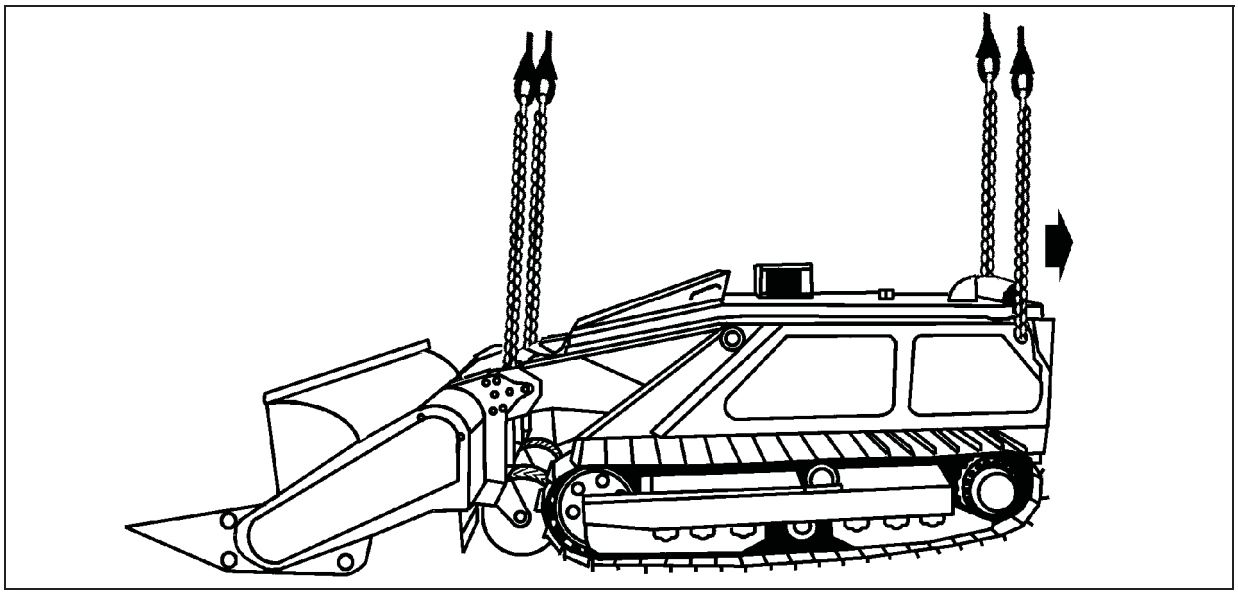

Figure 8-37. M4 Robotic Mine Flail

RIGGING STEPS
1. Place two sling legs on apex fitting number 1. Position sling set number 1 on top of the tower on the front (lunette end) of the mine flail. 2. Loop the chain end of the left and right sling legs to the front lift provisions located inboard of the lift arms. Place the correct link from Table 8-37 in the grab hook. 3. Place two sling legs on apex fitting number 2. Position sling set number 2 on top of the tower at the rear of the mine flail. 4. Loop the chain end of the left and right sling legs through their respective lift provisions. Place the correct link from Table 8-37 in the grab hook. Secure the excess chain with tape or Type III nylon cord. 5. Pull the chain of each sling leg up tightly and tape or tie just above the lift provision. 6. Raise the apex fittings above the load. Cluster and tie (breakaway technique) the sling legs in each sling set together to prevent entanglement during hookup and lift-off.

Figure 8-37. M4 Robotic Mine Flail (Continued)

PNEUMATIC TOOL AND COMPRESSOR OUTFIT/HYDRAULIC PIONEER TOOL OUTFIT (PTO) ON M353 TRAILER

8-39. The pneumatic tool and compressor outfit/hydraulic pioneer tool outfit on M353 trailer is rigged for dual-point sling load using the following procedures:

- **Applicability.** The following items in Table 8-38 are certified for the helicopter(s) listed in the following table by the US Army Natick Soldier Center:

Table 8-38. Pneumatic Tool and Compressor Outfit/Hydraulic Pioneer Tool Outfit on M353 Trailer

Nomenclature	*Max Weight (Pounds)*	*Sling Set*	*Link Count Front/Rear*	*Type of Aircraft*
Pneumatic tool and Compressor, TAMCN B0395	8,040	15K	5/30	CH-53
Hydraulic Pioneer and Tool Outfit	6,740	10K	3/30	CH-47

- **Materials.** The following materials are required to rig this load:
  - Sling set (15,000-pound capacity) (2 each).

    OR
  - Sling set (10,000-pound capacity) with one additional apex fitting.
  - Tape, adhesive, pressure-sensitive, 2-inch wide roll.
  - Cord, nylon, Type III, 550-pound breaking strength.
  - Webbing, cotton, 1/4-inch, 80-pound breaking strength.
  - Felt sheet, cattle hair, Type IV, 1/2-inch or suitable substitute.
- **Personnel.** Two persons can prepare and rig this load in 15 minutes.
- **Procedures.** The following procedures apply to this load:
  - **Preparation.** Prepare the load using the following steps:

- Engage both hand brakes.
- Ensure the fuel tanks are not over 3/4 full. Inspect the fuel tank cap, oil filler cap, and battery caps for proper installation. Secure all loose gear and doors.
- Secure the light cable to the drawbar with tape or Type III nylon cord.
- Tape all glass items, lights, and reflectors.
- Secure the two small wheels.

■ **Rigging.** Rig the load according to the steps in Figure 8-38.

Note. When using the 15,000-pound capacity multileg sling set, tie or tape the inner sling legs to the outer sling legs.

■ **Hookup.** Two hookup teams are required for this load. The static discharge person discharges the static electricity. The forward hookup person stands on top of the compressor and places apex fitting 1 onto the forward cargo hook. The aft hookup person stands on top of the compressor and places apex fitting 2 onto the aft cargo hook. The hookup teams then carefully dismount the load and remain close to the load as the helicopter removes slack from the sling legs. When successful hookup is assured, the hookup teams quickly exit the area underneath the helicopter to the designated rendezvous point.

Note. Brief the helicopter crew to relax the sling leg tension and hover to the side before releasing the web ring to prevent damaging the boat.

■ **Derigging.** Derigging is the reverse of the preparation and rigging procedures.

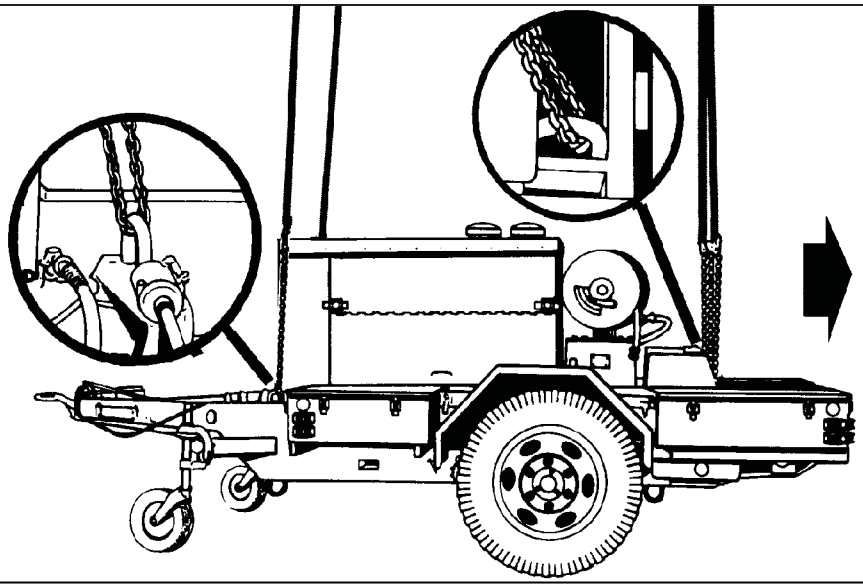

RIGGING STEPS

1. Place two sling legs on apex fitting number 1. Position sling set number 1 on top of the load.
2. Loop the chain end of the left and right sling legs through their respective lifting provisions located on the front corners of the trailer. Place the correct link from Table 8-38 in the grab hook.

Figure 8-38. Tool Outfits on M353 Trailer

RIGGING STEPS (Continued)
3. Place two sling legs on apex fitting number 2. Position sling set number 1 on top of the load. 4. Loop the chain end of the left and right sling legs through their respective lifting provisions located on the rear corners of the trailer. Place the correct link from Table 8-38 in the grab hook. 5. Pad the chains where they contact the load. 6. Raise the apex fittings above the load. Cluster and tie (breakaway technique) the sling legs in each sling set together to prevent entanglement during hookup and lift-off.

Figure 8-30. Tool Outfits on M353 Trailer (Continued)

WATER PURIFICATION UNIT, REVERSE OSMOSIS (ROWPU)

8-40. The water purification unit, reverse osmosis is rigged for dual-point sling load using the following procedures:

- **Applicability.** The following item in Table 8-39 is certified for the helicopter(s) listed in the following table by the US Army Natick Soldier Center:

Table 8-39. Water Purification Unit, Reverse Osmosis

Nomenclature	*Max Weight (Pounds)*	*Sling Set*	*Link Count Front/Rear*	*Type of Aircraft*
Water Purification Unit, Reverse Osmosis, MC 257, 600 gph, Skid Mounted	7,400	15K	5/5	CH-53

- **Materials.** The following materials are required to rig this load:
  - Sling set (15,000-pound capacity) (2 each).
  - Tape, adhesive, pressure-sensitive, 2-inch wide roll.
  - Cord, nylon, Type III, 550-pound breaking strength.
  - Webbing, cotton, 1/4-inch, 80-pound breaking strength.
- **Personnel.** Two persons can prepare and rig this load in 15 minutes.
- **Procedures.** The following procedures apply to this load:
  - **Preparation.** Prepare the load using the following steps:
    - Secure all boxes, containers, and loose equipment with tape or Type III nylon cord.
    - Tape all glass fixtures, reflectors, and gages.
  - **Rigging.** Rig the load according to the steps in Figure 8-39.

Note. When using the 15,000-pound capacity multileg sling set, tie or tape the inner sling legs to the outer sling legs.

- **Hookup.** Two hookup teams are required for this load. The static discharge person discharges the static electricity. The forward hookup person stands on top of the unit and places apex fitting 1 onto the forward cargo hook. The aft hookup person stands on top of the unit and places apex fitting 2 onto the aft cargo hook. The hookup teams then carefully dismount the load and remain close to the load as the helicopter removes slack from the sling legs. When successful hookup is assured, the hookup teams quickly exit the area underneath the helicopter to the designated rendezvous point.
- **Derigging**. Derigging is the reverse of the preparation and rigging procedures.

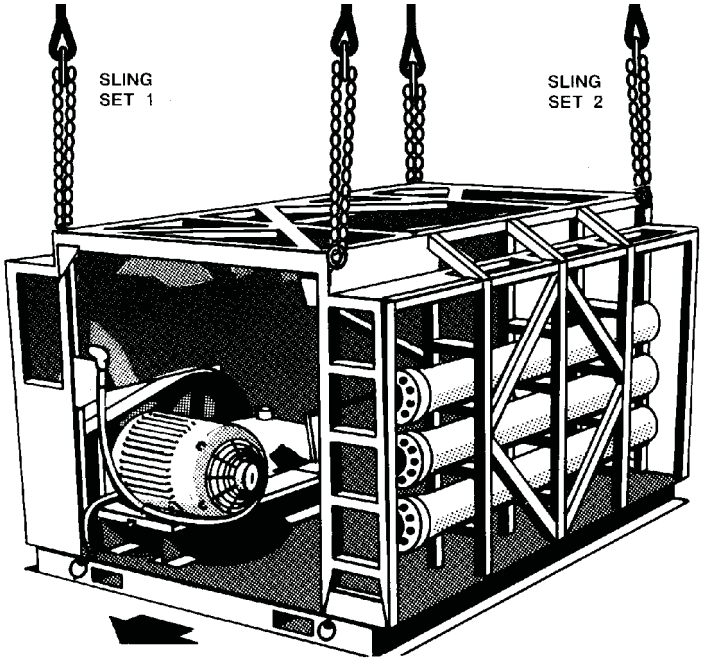

RIGGING STEPS

Note. The water pump end is designated as the forward end.

1. Position sling set number 1 on top of the pump end of the ROWPU.
2. Loop the chain end of the left and right sling legs through their respective lift provisions located on the top corners of the unit. Place the correct link from Table 8-39 in the grab hook.
3. Position sling set number 2 on top of the unit at the rear.
4. Loop the chain end of the left and right sling legs through their respective lift provisions located on the top corners of the unit. Place the correct link from Table 8-39 in the grab hook.
5. Raise the apex fittings above the load. Cluster and tie (breakaway technique) the sling legs in each sling set together to prevent entanglement during hookup and lift-off.

Figure 8-39. Water Purification Unit, Reverse Osmosis

WATER PURIFICATION UNIT, REVERSE OSMOSIS (ROWPU), TRAILER MOUNTED

8-41. The water purification unit, reverse osmosis, trailer mounted is rigged for dual-point sling load using the following procedures:

- **Applicability.** The following item in Table 8-40 is certified for the helicopter(s) listed in the following table by the US Army Natick Soldier Center:

Table 8-40. Water Purification Unit, Reverse Osmosis, Trailer Mounted

Nomenclature	*Max Weight (Pounds)*	*Sling Set*	*Link Count Front/Rear*	*Type of Aircraft*
Water Purification Unit, Reverse Osmosis, 600 gph, Trailer Mounted	17,800	25K	3/10	CH-47

- **Materials.** The following materials are required to rig this load:
  - Sling set (25,000-pound capacity) with one additional apex fitting.
  - Tape, adhesive, pressure-sensitive, 2-inch wide roll.
  - Cord, nylon, Type III, 550-pound breaking strength.
  - Webbing, cotton, 1/4-inch, 80-pound breaking strength.
  - Strap, cargo, tiedown, CGU-1/B (4 each).
  - Felt sheet, cattle hair, Type IV, 1/2-inch or suitable padding
- **Personnel.** Two persons can prepare and rig this load in 20 minutes.
- **Procedures.** The following procedures apply to this load:
  - **Preparation.** Prepare the load using the following steps:
    - Drain the water from the unit.
    - Retract the trailer jacks.
    - Remove the canvas from the unit.
    - Secure all hoses and loose equipment with tape or Type III nylon cord.
    - Tape all reflectors, lights, and gages.
    - Secure the generator doors with CGU-1/B straps.
    - Ensure the fuel tanks are not over 3/4 full. Inspect the fuel tank cap, oil filler cap, and battery caps for proper installation.
    - Engage the hand brake.
  - **Rigging.** Rig the load according to the steps in Figure 8-40.
  - **Hookup.** Two hookup teams are required for this load. The static discharge person discharges the static electricity. The forward hookup person stands on top of the generator and places apex fitting 1 onto the forward cargo hook. The aft hookup person stands on the frame and places apex fitting 2 onto the aft cargo hook. The hookup teams then carefully dismount the load and remain close to the load as the helicopter removes slack from the sling legs. When successful hookup is assured, the hookup teams quickly exit the area underneath the helicopter to the designated rendezvous point.
  - **Derigging.** Derigging is the reverse of the preparation and rigging procedures.

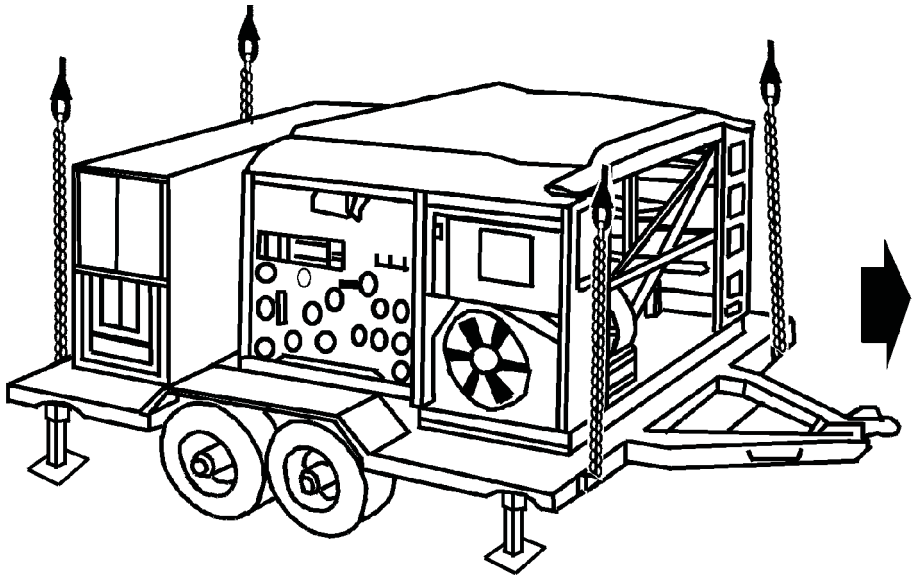

RIGGING STEPS

1. Place two sling legs on apex fitting number 1. Position sling set number 1 on top of the generator.

2. Loop the chain end of the left and right sling legs through their respective lift provisions located on the front corners of the trailer. Place the correct link from Table 8-40 in the grab hook.

3. Place two sling legs on apex fitting number 2. Position sling set number 2 on top of the tongue end of the unit.

4. Loop the chain end of the left and right sling legs through their respective lift provisions located on the rear corners of the trailer. Place the correct link from Table 8-40 in the grab hook. Secure the excess chain with tape or Type III nylon cord.

5. Pad the slings where they contact the unit.

6. Raise the apex fittings above the load. Cluster and tie (breakaway technique) the sling legs in each sling set together to prevent entanglement during hookup and lift-off.

Figure 8-40. Water Purification Unit, Reverse Osmosis, Trailer Mounted

INLAND PETROLEUM DISTRIBUTION SYSTEM (IPDS), MAINLINE PUMP ON 20-FOOT FLATRACK

8-42. The inland petroleum distribution system, mainline pump on 20-foot flatrack is rigged for dual-point sling load using the following procedures:

- **Applicability.** The following item in Table 8-41 is certified for the helicopter(s) listed in the following table by the US Army Natick Soldier Center:

Table 8-41. Inland Petroleum Distribution System, Mainline Pump on 20-Foot Flatrack

Nomenclature	*Max Weight (Pounds)*	*Sling Set*	*Link Count Front/Rear*	*Type of Aircraft*
Inland Petroleum Distribution System, Mainline Pump on 20-Foot flatrack	19,500	25K	2/30	CH-47

- **Materials.** The following materials are required to rig this load:
  - Sling set (25,000-pound capacity) with one additional apex fitting.
    - Additional chain lengths, part number 38850-00053-102 (4 each).
    - Additional coupling links, part number 664241 (4 each).
  - Tape, adhesive, pressure-sensitive, 2-inch wide roll.
  - Cord, nylon, Type III, 550-pound breaking strength.
  - Webbing, cotton, 1/4-inch, 80-pound breaking strength.
- **Personnel.** Three persons can prepare and rig this load in 20 minutes.
- **Procedures.** The following procedures apply to this load:
  - **Preparation.** Prepare the load using the following steps:
    - The pump end of the flatrack is the forward end of the load.
    - Secure all loose equipment with tape or Type III nylon cord.
    - Attach an additional chain length to each sling leg chain using a coupling link.
  - **Rigging.** Rig the load according to the steps in Figure 8-41.
  - **Hookup.** Two hookup teams are required for this load. The static discharge person discharges the static electricity. The forward hookup person stands on the engine cover and places apex fitting 1 onto the forward cargo hook. The aft hookup person stands on the engine cover and places apex fitting 2 onto the aft cargo hook. The hookup teams then carefully dismount the load and remain close to the load as the helicopter removes slack from the sling legs. When successful hookup is assured, the hookup teams quickly exit the area underneath the helicopter to the designated rendezvous point.

Note. Brief the pilot to relax the sling tension and hover to the side of the load when releasing the apex fitting to prevent damaging the load.

  - **Derigging.** Derigging is the reverse of the preparation and rigging procedures.

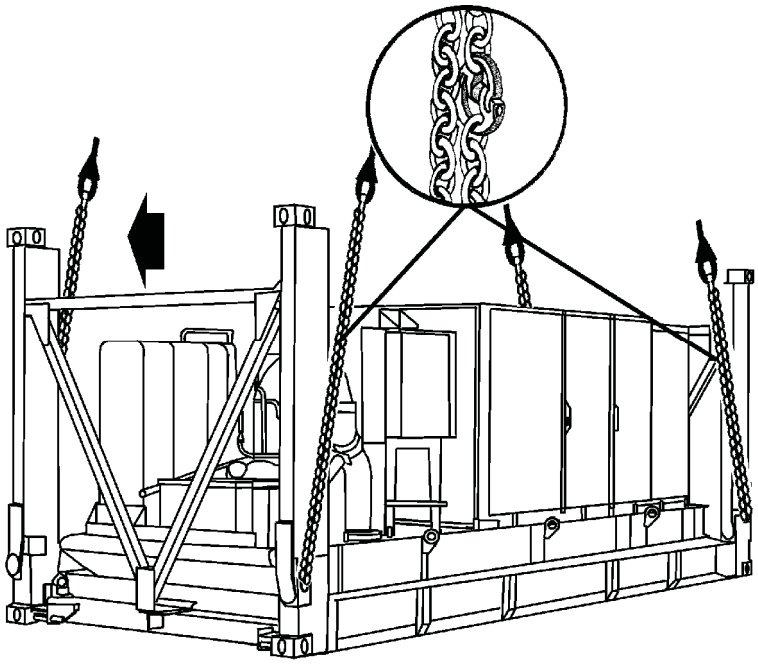

RIGGING STEPS

1. Place two sling legs on apex fitting number 1. Position sling set number 1 on top of the pump closet on the forward end.

2. Loop the chain end of the left and right sling legs through their respective lift provisions located on the front portion of the container. Place the correct link from Table 8-41 in the grab hook.

3. Place two sling legs on apex fitting number 2. Position sling set number 2 on top of the engine compartment near the aft end.

4. Loop the chain end of the left and right sling legs through their respective lift provisions located on the aft end of the pump. Place the correct link from Table 8-41 in the grab hook. Secure the excess chain with tape or Type III nylon cord.

5. Raise the apex fittings above the load. Cluster and tie (breakaway technique) the sling legs in each sling set together to prevent entanglement during hookup and lift-off.

Figure 8-41. Inland Petroleum Distribution System (IPDS), Mainline Pump on 20-Foot Flatrack

This page intentionally left blank.

Chapter 9

Certified Dual-Point Rigging Procedures for Liquid Containers

INTRODUCTION

9-1. This chapter contains rigging procedures for dual-point lift of liquid containers that have been certified for sling load. Each rigging procedure is found in a paragraph that includes a description of the load, materials required for rigging, and steps to complete the procedure. An applicability paragraph is also a part of each paragraph and identifies the certified loads. The certified dual-point rigging procedures for liquid containers are in this section. Paragraphs 9-2 through 9-5 give detailed instructions for rigging loads.

Note. Reach Pendants may be used on dual point loads. Place a Reach Pendant on each apex fitting. A static discharge person is not required when using a Reach Pendant.

TWO STORAGE MODULES, FUEL/WATER (SIDE BY SIDE)

9-2. The two storage modules, fuel/water are rigged for dual-point sling load using the following procedures:

- **Applicability.** The following items in Table 9-1 are certified for the helicopter(s) listed in the following table by the US Army Natick Soldier Center:

Table 9-1. Two Storage Modules, Fuel/Water

Nomenclature	*Max Weight (Pounds)*	*Sling Set*	*Link Count Front/Rear*	*Type of Aircraft*
Two Sixcon Storage Modules, Fuel/Water, TAMCN B2085/B2086 (Empty), Side by Side	5,500	15K	3/3	CH-53
Two Sixcon Storage Modules, Fuel/Water, TAMCN B2085/B2086 (Full), Side by Side	20,100	40K	3/3	CH-53
One Sixcon, Storage Module, Fuel/Water, TAMCN B2085/B2086 (Empty) and One Sixcon Pump Module, Fuel/Water, TAMCN B1580/B1581, Side by Side	5,100	15K	3/3	CH-53
Two Sixcon Pump Modules, Fuel/Water, TAMCN B1580/B1581, Side by Side	4,700	15K	3/3	CH-53

- **Materials.** The following materials are required to rig this load:
  - Sling set (15,000-pound capacity) (2 each).

    OR
  - Sling set (40,000-pound capacity) with one additional apex fitting.
  - Tape, adhesive, pressure-sensitive, 2-inch wide roll.
  - Cord, nylon, Type III, 550-pound breaking strength.
  - Webbing, cotton, 1/4-inch, 80-pound breaking strength.
- **Personnel.** Two persons can prepare and rig this load in 15 minutes.

- **Procedures.** The following procedures apply to this load:
  - **Preparation.** Prepare the load using the following steps:

> **CAUTION**
>
> The Tandemloc horizontal connector, MFR Part NO. 712946-M-PZN, NSN 5410-01-363-7086, must be used to secure the Sixcons together. DO NOT USE ANY OTHER TYPE OF CONNECTOR.

    - Connect the two modules together side by side using the horizontal connectors. Ensure the connectors are properly secured.
    - Ensure the modules are in one of the configurations shown in Table 9-1.
    - Secure all hatches, hose valves, and loose equipment with tape or Type III nylon cord.
  - **Rigging.** Rig the load according to the steps in Figure 9-1.

Note. When using the 15,000-pound capacity multileg sling set, tie or tape the inner sling legs to the outer sling legs.

  - **Hookup.** Two hookup teams are required for this load. The static discharge person discharges the static electricity. The forward hookup person stands on top of the front module and places apex fitting 1 onto the forward cargo hook. The aft hookup person stands on the top of the rear module and places apex fitting 2 onto the aft cargo hook. The hookup teams then carefully dismount the load and remain close to the load as the helicopter removes slack from the sling legs. When successful hookup is assured, the hookup teams quickly exit the area underneath the helicopter to the designated rendezvous point.
  - **Derigging.** Derigging is the reverse of the preparation and rigging procedures.

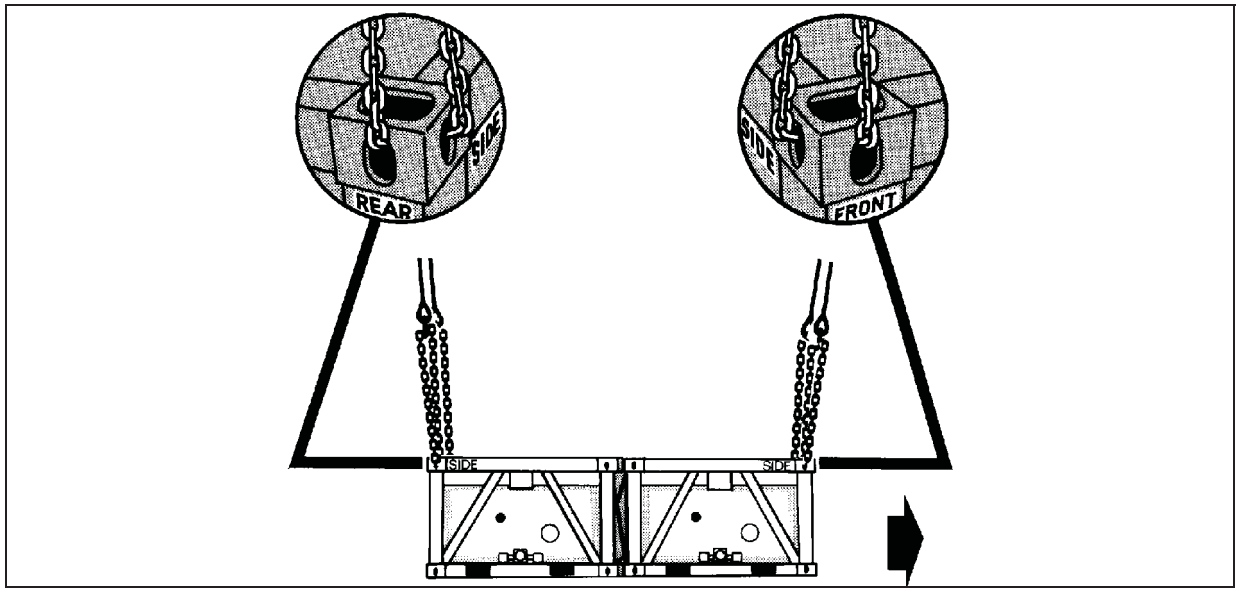

Figure 9-1. Two Storage Modules, Fuel/Water

RIGGING STEPS
Note. All sling sets use the same link count. 1. Place two sling legs on apex fitting number 1. Position apex fitting number 1 on top of the front module. 2. Loop the chain end of the left and right sling legs through the front and side of their respective lift provisions located on the top front corners of the module. Place the correct link from Table 9-1 in the grab hook. 3. Place two sling legs on apex fitting number 2. Position apex fitting number 2 on top of the rear module. 4. Loop the chain end of the left and right sling legs through the rear and side of their respective lift provisions located on the top rear corners of the module. Place the correct link from Table 9-1 in the grab hook. 5. Raise the apex fittings above the tractor. Cluster and tie (breakaway technique) the sling legs in each sling set together to prevent entanglement during hookup and lift-off.

Figure 9-1. Two Storage Modules, Fuel/Water (Continued)

THREE STORAGE MODULES, FUEL/WATER (SIDE BY SIDE)

9-3. The three storage modules, fuel/water are rigged for dual-point sling load using the following procedures:

- **Applicability.** The following items in Table 9-2 are certified for the helicopter(s) listed in the following table by the US Army Natick Soldier Center:

Table 9-2. Three Storage Modules, Fuel/Water

Nomenclature	*Max Weight (Pounds)*	*Sling Set*	*Link Count Front/Rear*	*Type of Aircraft*
Three Sixcon Storage Modules, Fuel/Water, TAMCN B2085/B2086 (Empty), Side by Side	8,300	15K	3/3	CH-53
Two Full Sixcon Storage Modules, Fuel/Water, TAMCN B2085/B2086 and One Empty Sixcon Storage Module, Side by Side	22,900	40K	3/3	CH-53
Two Empty Sixcon Storage Modules, Fuel/Water, TAMCN B2085/B2086 and One Full Sixcon Storage Module, Side by Side	15,600	40K	3/3	CH-53
Two Full Sixcon, Storage Modules, Fuel/Water, TAMCN B2085/B2086 and One Sixcon Pump Module, Fuel/Water, TAMCN B1580/B1581, Side by Side	22,500	40K	3/3	CH-53

Table 9-2. Three Storage Modules, Fuel/Water (Continued)

Nomenclature	*Max Weight (Pounds)*	*Sling Set*	*Link Count Front/Rear*	*Type of Aircraft*
Two Empty Sixcon, Storage Modules, Fuel/Water, TAMCN B2085/B2086 and One Sixcon Pump Module, Fuel/Water, TAMCN B1580/B1581, Side by Side	7,900	15K	3/3	CH-53
One Full Sixcon, Storage Modules, Fuel/Water, TAMCN B2085/B2086 and Two Sixcon Pump Modules, Fuel/Water, TAMCN B1580/B1581, Side by Side	14,800	15K	3/3	CH-53
One Empty Sixcon, Storage Modules, Fuel/Water, TAMCN B2085/B2086 and Two Sixcon Pump Modules, Fuel/Water, TAMCN B1580/B1581, Side by Side	7,500	15K	3/3	CH-53
Three Sixcon Pump Modules, Fuel/Water, TAMCN B1580/B1581, Side by Side	7,100	15K	3/3	CH-53
One Full and One Empty Sixcon, Storage Modules, Fuel/Water, TAMCN B2085/B2086 and One Sixcon Pump Module, Fuel/Water, TAMCN B1580/B1581, Side by Side	15,200	40K	3/3	CH-53

Note. The configurations below are the only certified configurations.

1. Empty Storage/ Empty Storage/ Empty Storage
2. Full Storage/ Empty Storage/Full Storage
3. Empty Storage/Full Storage/ Empty Storage
4. Full Storage/Pump/Full Storage
5. Empty Storage/Pump/ Empty Storage
6. Pump/Full Storage/Pump
7. Pump/Empty Storage/Pump
8. Pump/Pump/Pump
9. Pump/Full Storage/Empty Storage

- **Materials.** The following materials are required to rig this load:
  - Sling set (15,000-pound capacity) (2 each).

    OR
  - Sling set (40,000-pound capacity) with one additional apex fitting.
  - Tape, adhesive, pressure-sensitive, 2-inch wide roll.
  - Cord, nylon, Type III, 550-pound breaking strength.
  - Webbing, cotton, 1/4-inch, 80-pound breaking strength.
- **Personnel.** Two persons can prepare and rig this load in 15 minutes.
- **Procedures.** The following procedures apply to this load:
  - **Preparation.** Prepare the load using the following steps:

CAUTION

The Tandemloc horizontal connector, MFR Part NO. 712946-M-PZN, NSN 5410-01-363-7086, must be used to secure the Sixcons together. DO NOT USE ANY OTHER TYPE OF CONNECTOR.

- Connect the three modules together side by side using the horizontal connectors. Ensure the connectors are properly secured.
- Ensure the modules are either completely full or empty and in one of the configurations shown in the note after Table 9-2.
- Secure all hatches, hose valves, and loose equipment with tape or Type III nylon cord.

- **Rigging.** Rig the load according to the steps in Figure 9-2.

Note. When using the 15,000-pound capacity multileg sling set, tie or tape the inner sling legs to the outer sling legs.

- **Hookup.** Two hookup teams are required for this load. The static discharge person discharges the static electricity. The forward hookup person stands on top of the front module and places apex fitting 1 onto the forward cargo hook. The aft hookup person stands on the top of the rear module and places apex fitting 2 onto the aft cargo hook. The hookup teams then carefully dismount the load and remain close to the load as the helicopter removes slack from the sling legs. When successful hookup is assured, the hookup teams quickly exit the area underneath the helicopter to the designated rendezvous point.
- **Derigging.** Derigging is the reverse of the preparation and rigging procedures.

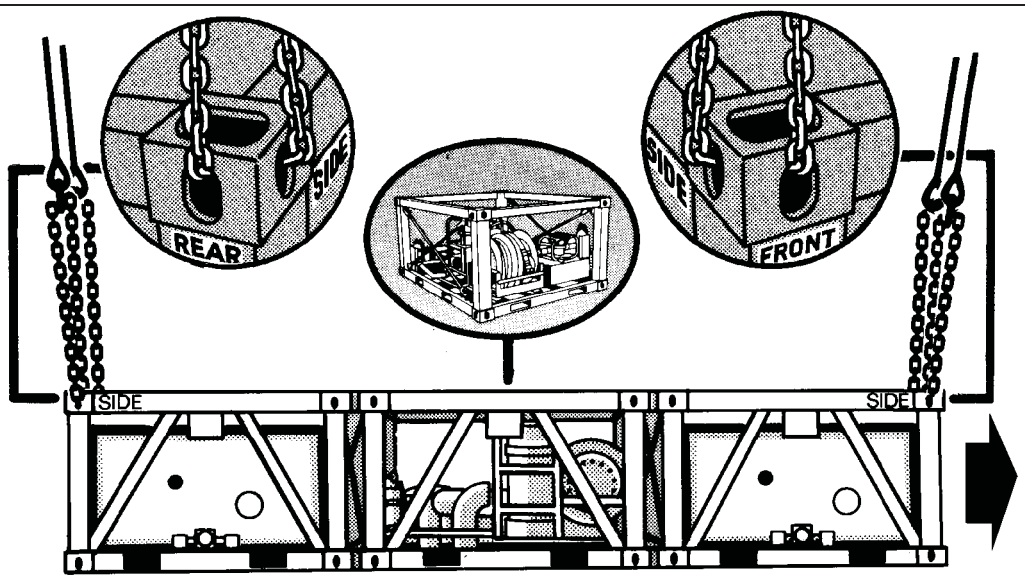

RIGGING STEPS

Note. All sling sets use the same link count

1. Place two sling legs on apex fitting number 1. Position apex fitting number 1 on top of the front module.

2. Loop the chain end of the left and right sling legs through the front and side of their respective lift provisions located on the top front corners of the module. Place the correct link from Table 9-2 in the grab hook.

3. Place two sling legs on apex fitting number 2. Position apex fitting number 2 on top of the rear module.

4. Loop the chain end of the left and right sling legs through the rear and side of their respective lift provisions located on the top rear corners of the module. Place the correct link from Table 9-2 in the grab hook.

5. Raise the apex fittings above the tractor. Cluster and tie (breakaway technique) the sling legs in each sling set together to prevent entanglement during hookup and lift-off.

Figure 9-2. Three Modules, Fuel/Water

FIVE 500-GALLON FUEL DRUMS

9-4. The five 500-gallon fuel drums are rigged for dual-point sling load using the following procedures:

- **Applicability.** The following item in Table 9-3 is certified for the helicopter(s) listed in the following table by the US Army Natick Soldier Center:

Table 9-3. Five 500-Gallon Fuel Drums

Nomenclature	*Max Weight (Pounds)*	*Sling Set*	*Link Count*	*Type of Aircraft*
Five 500-Gallon Fuel Drums	18,825	25K	3/3/3/3	CH-47

CAUTION

The maximum weight listed is based on fuel drums filled to capacity with JP-8. Filling drums to capacity with other fluids of higher density, such as water, will result in higher weights that may overload the aircraft.

- **Materials.** The following materials are required to rig this load:
  - Sling set (25,000-pound capacity) (2 each).
  - Tape, adhesive, pressure-sensitive, 2-inch wide roll.
  - Cord, nylon, Type III, 550-pound breaking strength.
  - Webbing, cotton, 1/4-inch, 80-pound breaking strength.
- **Personnel.** Two persons can prepare and rig this load in 15 minutes.
- **Procedures.** The following procedures apply to this load:
  - **Preparation.** Prepare the load using the following steps:
    - Align the drums side by side in a row.
    - Ensure lifting clevises are serviceable.
    - Rotate the drum hub so a clevis is on top.
  - **Rigging.** Rig the load according to the steps in Figure 9-3.
  - **Hookup.** Two hookup teams are required for this load. The hookup teams stand beside the load. The static discharge person discharges the static electricity. The forward hookup person places apex fitting 1 onto the forward cargo hook. The aft hookup person places apex fitting 2 onto the aft cargo hook. The hookup teams then carefully dismount the load and remain close to the load as the helicopter removes slack from the sling legs. When successful hookup is assured, the hookup teams quickly exit the area underneath the helicopter to the designated rendezvous point.
  - **Derigging**. Derigging is the reverse of the preparation and rigging procedures.

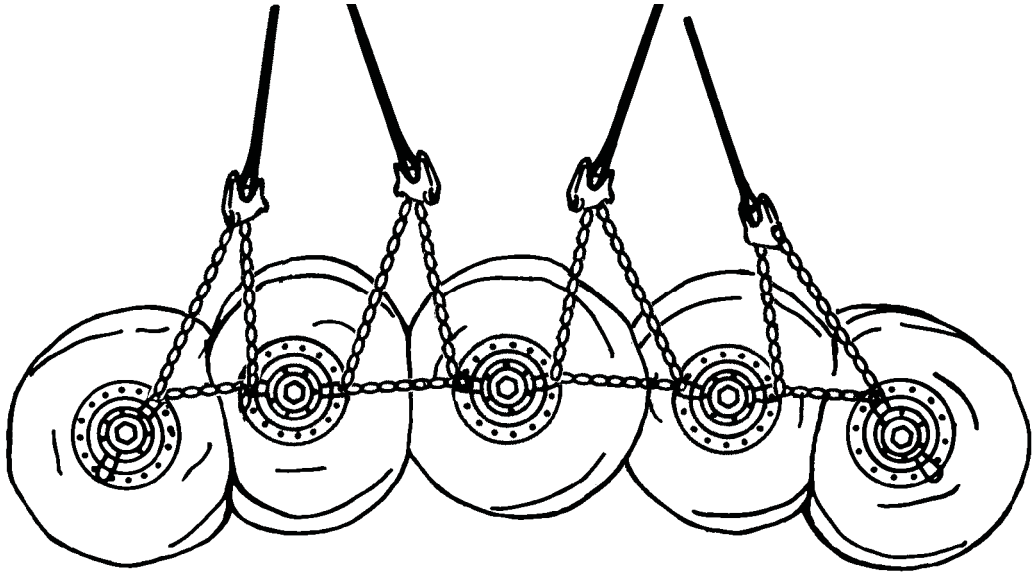

RIGGING STEPS

1. Position apex fitting number 1 on top of the second drum.

2. Route outer sling legs 1 and 2 to the first and second drums. Loop the chain end of sling leg 1 through the clevis on the left hub of the first drum, over and through the clevis of the second drum. Place the correct link from Table 9-3 in the grab hook. Repeat with sling leg 2 on the other side of the drums.

3. Route inner sling legs 3 and 4 of the first sling set to the second and third drums. Loop the chain end of sling leg 3 through the clevis on the left hub of the second drum, over and through the clevis of the third drum. Place the correct link from Table 9-3 in the grab hook. Repeat with sling leg 4 on the other side of the drums.

4. Position apex fitting number 2 on top of the fourth drum.

5. Route outer sling legs 1 and 2 to the third and fourth drums. Loop the chain end of sling leg 1 through the clevis on the left hub of the third drum, over and through the clevis of the fourth drum. Place the correct link from Table 9-3 in the grab hook. Repeat with sling leg 2 on the other side of the drums.

6. Route inner sling legs 3 and 4 of the second sling set to the fourth and fifth drums. Loop the chain end of sling leg 3 through the clevis on the left hub of the fourth drum, over and through the clevis of the fifth drum. Place the correct link from Table 9-3 in the grab hook. Repeat with sling leg 4 on the other side of the drums.

7. Raise the apex fittings above the drums. Cluster and tie (breakaway technique) the sling legs in each sling set together to prevent entanglement during hookup and lift-off.

Figure 9-3. Five 500-Gallon Fuel Drums

LOAD HANDLING SYSTEM-COMPATIBLE WATER TANK RACK SYSTEM (LHS-CWTRS)

9-5. The load handling system-compatible water tank rack system is rigged for dual-point sling load using the following procedures:

- **Applicability.** The following item in Table 9-4 is certified for the helicopter(s) listed in the following table by the US Army Natick Soldier Center:

Table 9-4. Load Handling System-Compatible Water Tank Rack System

Nomenclature	*Max Weight (Pounds)*	*Sling Set*	*Link Count Front/Rear*	*Type of Aircraft*
Load Handling System-Compatible Water Tank Rack System	9,200	10K	40/3	CH-47

- **Materials.** The following materials are required to rig this load:
  - Sling set (10,000-pound capacity) with one additional apex fitting.
    - Chain length, part number 38850-00053-101, from a 10,000-pound capacity sling set (4 each).
    - Coupling link, part number 5779125, from a 10,000-pound capacity sling set (4 each).
  - Tape, adhesive, pressure-sensitive, 2-inch wide roll.
  - Cord, nylon, Type III, 550-pound breaking strength.
  - Webbing, cotton, 1/4-inch, 80-pound breaking strength.
- **Personnel.** Two persons can prepare and rig this load in 15 minutes.
- **Procedures.** The following procedures apply to this load:
  - **Preparation.** Prepare the load using the following steps:
    - Extend the sling leg chains by connecting one additional chain length to each chain on a 10,000-pound capacity sling set with coupling links.
    - Secure all loose equipment tape, or Type III nylon cord
    - Ensure the fuel tank is not over 3/4 full. Inspect fuel tank cap for proper installation.
    - Ensure all latches are securely fastened.
    - Ensure all compartment doors are closed and safety tied with Type III nylon cord.
  - **Rigging.** Rig the load according to the steps in Figure 9-4.
  - **Hookup.** The hookup team stands on top of the load. The static wand person discharges the static electricity with the static wand. The forward hookup person places apex fitting 1 onto the forward cargo hook. The aft hookup person places apex fitting 2 onto the aft cargo hook. The hookup team then carefully dismounts the vehicle and remains close to the load as the helicopter removes slack from the sling legs. When successful hookup is assured, the hookup team quickly exits the area underneath the helicopter to the designated rendezvous point.
  - **Derigging.** Derigging is the reverse of the preparation and rigging procedures.

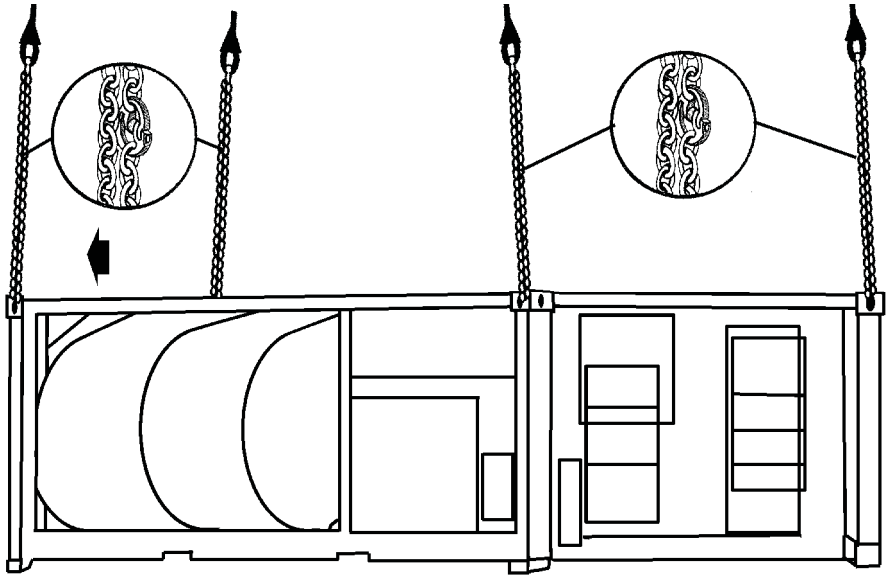

RIGGING STEPS

1. Place two sling legs on apex fitting number 1. Position apex fitting number 1 on top of the front module.

2. Loop the chain end of the left and right sling legs through the front and side of their respective lift provisions located on the top front corners of the module. Place the correct link from Table 9-4 in the grab hook.

3. Place two sling legs on apex fitting number 2. Position apex fitting number 2 on top of the rear module.

4. Loop the chain end of the left and right sling legs through the rear and side of their respective lift provisions located on the top rear corners of the module. Place the correct link from Table 9-4 in the grab hook.

5. Raise the apex fittings above the tractor. Cluster and tie (breakaway technique) the sling legs in each sling set together to prevent entanglement during hookup and lift-off.

Figure 9-4. Load Handling System-Compatible Water Tank Rack System

Chapter 10

Certified Dual-Point Rigging Procedures for Shelters

INTRODUCTION

10-1. This chapter contains rigging procedures for dual-point lift of shelters that have been certified for sling load. Each rigging procedure is found in a paragraph that includes a description of the load, materials required for rigging, and steps to complete the procedure. An applicability paragraph is also a part of each paragraph and identifies the certified loads. The certified dual-point rigging procedures for shelters are in this section. Paragraphs 10-2 through 10-13 give detailed instructions for rigging loads.

Note. Reach Pendants may be used on dual point loads. Place a Reach Pendant on each apex fitting. A static discharge person is not required when using a Reach Pendant.

COMMUNICATION OR ELECTRONIC SYSTEMS HOUSED IN S-250 SHELTERS

10-2. The communication or electronic systems housed in S-250 shelters are rigged for dual-point sling load using the following procedures:

- **Applicability.** The following items in Table 10-1 are certified for the helicopter(s) listed in the following table by the US Army Natick Soldier Center:

Table 10-1. Communication or Electronic Systems Housed in S-250 Shelters

Nomenclature	*Max Weight (Pounds)*	*Sling Set*	*Link Count Front/Rear*	*Type of Aircraft*
Satellite Communications Shelter, AN/TSC-93B (V) 1 or (V) 2	3,250	10K	33/3	CH-47
Operations Control Group, AN/TPQ-36 Firefinder, Block II	2,200	10K	33/3	CH-47

- **Materials.** The following materials are required to rig this load:
  - Sling set (10,000-pound capacity) with one additional apex fitting.
  - Tape, adhesive, pressure-sensitive, 2-inch wide roll.
  - Cord, nylon, Type III, 550-pound breaking strength.
  - Webbing, cotton, 1/4-inch, 80-pound breaking strength.
- **Personnel.** Two persons can prepare and rig this load in 10 minutes.
- **Procedures.** The following procedures apply to this load:
  - **Preparation.** Prepare the load using the following steps:
    - Remove and store all externally mounted equipment inside the shelter.
    - Close and secure all doors, vents, hatches, and caps with tape or Type III nylon cord.
    - Secure the Environmental Control Unit's cover with Type III nylon cord.
  - **Rigging.** Rig the load according to the steps in Figure 10-1.

- **Hookup.** Two hookup teams stand on the roof of the shelter. The static discharge person discharges the static electricity. The forward hookup person (ECU end) places apex fitting 1 onto the forward cargo hook. The aft hookup person places apex fitting 2 onto the aft cargo hook. The hookup teams then carefully dismount the dozer and remain close to the load as the helicopter removes slack from the sling legs. When successful hookup is assured, the hookup teams quickly exit the area underneath the helicopter to the designated rendezvous point.

Note. Brief the helicopter crew to relax the sling leg tension and hover to the side of the load when releasing the apex fitting.

- **Derigging.** Derigging is the reverse of the preparation and rigging procedures.

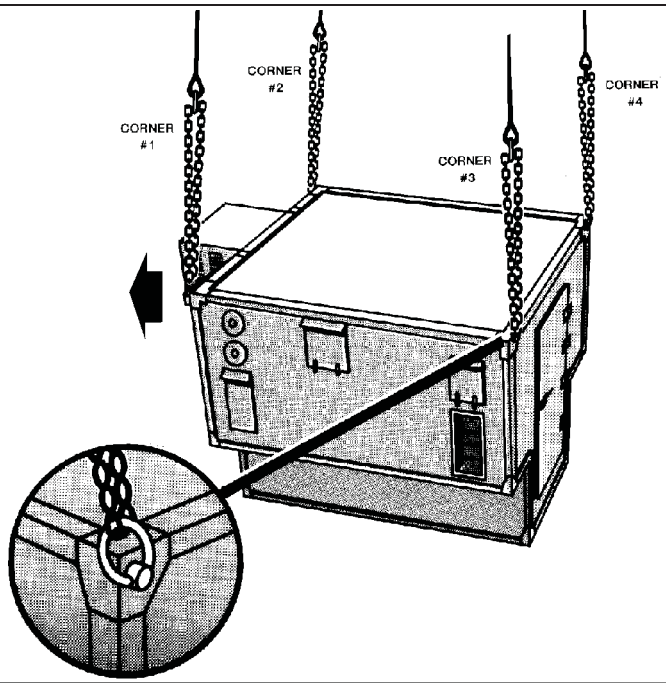

RIGGING STEPS

1. Place two sling legs on apex fitting number 1. Position apex fitting number 1 on top of the ECU end of the shelter.

2. Loop the chain end of the left and right sling legs through the front and side of their respective lift provisions located on the shelter corners. Place the correct link from Table 10-1 in the grab hook.

3. Place two sling legs on apex fitting number 2. Position apex fitting number 2 on top of the door end.

4. Loop the chain end of the left and right sling legs through the rear and side of their respective lift provisions located on the top shelter corners. Place the correct link from Table 10-1 in the grab hook.

5. Raise the apex fittings above the shelter. Cluster and tie (breakaway technique) the sling legs in each sling set together to prevent entanglement during hookup and lift-off.

Figure 10-1. S-250 Shelters

COMMUNICATION OR ELECTRONIC SYSTEMS HOUSED IN LIGHTWEIGHT MULTIPURPOSE SHELTERS (LMS)

10-3. The communication or electronic systems housed in lightweight multipurpose shelters are rigged for dual-point sling load using the following procedures:

- **Applicability.** The following items in Table 10-2 are certified for the helicopter(s) listed in the following table by the US Army Natick Soldier Center:

Table 10-2. Communication or Electronic Systems Housed in Lightweight Multipurpose Shelters

Nomenclature	*Max Weight (Pounds)*	*Sling Set*	*Link Count Front/Rear*	*Type of Aircraft*
Operations Central Shelter, Firefinder, AN/TPQ-36 (V) 8, S-788	2,869	10K	ECU is Front 20/3	CH-47
Biological Agent, Automatic, Integrated Detection System, s-788	3,300	10K	Door is Front 3/15	CH-47
Downsized Direct Support Section, Standard Integrated Command Post Systems, S-787/S-788	2,400	10K	ECU is Front 3/3	CH-47 CH-53

- **Materials.** The following materials are required to rig this load:
  - Sling set (10,000-pound capacity) with one additional apex fitting.
  - Tape, adhesive, pressure-sensitive, 2-inch wide roll.
  - Cord, nylon, Type III, 550-pound breaking strength.
  - Webbing, cotton, 1/4-inch, 80-pound breaking strength.
- **Personnel.** Three persons can prepare and rig this load in 15 minutes.
- **Procedures.** The following procedures apply to this load:
  - **Preparation.** Prepare the load using the following steps:
    - Secure all loose equipment inside the shelter with tape or Type III nylon cord.
    - Close and secure all doors, vents, hatches, and caps with tape or Type III nylon cord.
    - Secure the Environmental Control Unit's cover with tape or Type III nylon cord. Ensure the ECU frame mounting bolts are tight.
    - Remove the SINGARS antennas and store and secure inside the shelter.
    - Tie the front and aft lift provisions in the upright position.
  - **Rigging.** Rig the load according to the steps in Figure 10-2.
  - **Hookup.** Two hookup teams stand on the roof of the shelter. The static discharge person discharges the static electricity. The forward hookup person places apex fitting 1 onto the forward cargo hook. The aft hookup person places apex fitting 2 onto the aft cargo hook. The hookup teams then carefully dismount the load and remain close to the load as the helicopter removes slack from the sling legs. When successful hookup is assured, the hookup teams quickly exit the area underneath the helicopter to the designated rendezvous point.

Note. Brief the helicopter crew to relax the sling leg tension and hover to the side of the load when releasing the apex fitting.

  - **Derigging.** Derigging is the reverse of the preparation and rigging procedures.

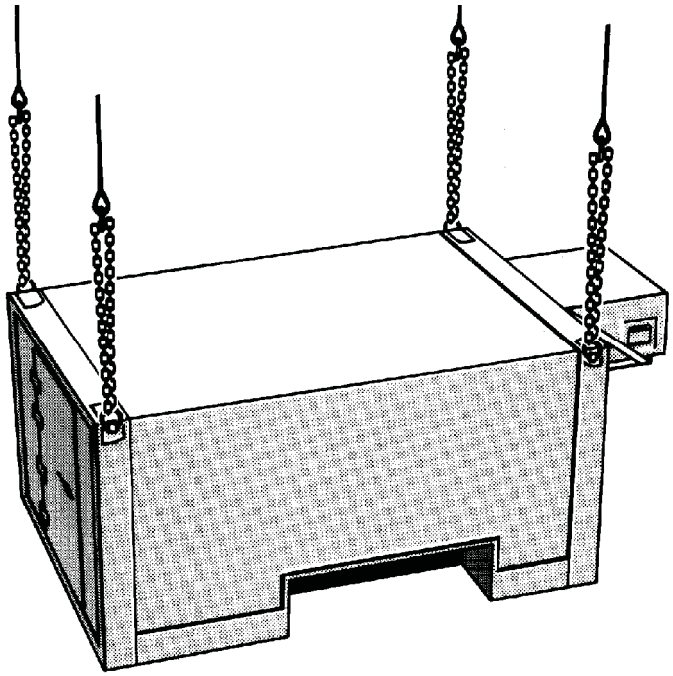

RIGGING STEPS

Note. The direction of flight is the front of the shelter as shown in the link count column of Table 10-2.

1. Place two sling legs on apex fitting number 1. Position apex fitting number 1 on top of the shelter.

2. Loop the chain end of the left and right sling legs through their respective lift provisions located on the front of the shelter. Place the correct link from Table 10-2 in the grab hook.

3. Place two sling legs on apex fitting number 2. Position apex fitting number 2 on top of the door end.

4. Loop the chain end of the left and right sling legs through their respective lift provisions located on the rear of the shelter. Place the correct link from Table 10-2 in the grab hook.

5. Raise the apex fittings above the shelter. Cluster and tie or tape (breakaway technique) the sling legs in each sling set together to prevent entanglement during hookup and lift-off.

Figure 10-2. Lightweight Multipurpose Shelter

COMMUNICATION OR ELECTRONIC SYSTEMS HOUSED IN S-280 SHELTERS

10-4. The communication or electronic systems housed in S-280 shelters are rigged for dual-point sling load using the following procedures:

- **Applicability.** The following items in Table 10-3 are certified for the helicopter(s) listed in the following table by the US Army Natick Soldier Center:

Table 10-3. Communication or Electronic Systems Housed in S-280 Shelters

Nomenclature	*Max Weight (Pounds)*	*Sling Set*	*Link Count Front/Rear*	*Type of Aircraft*
Multiplexer Terminal Set, AN/TSQ-146(V)	6,190	10K	Door is Front 5/50	CH-47
Battery Servicing Shelter, AN/TSM-133	5,420	10K	Door is Front 3/30	CH-47
Repeater Set, Radio, AN/TRC-138A	4,720	10K	ECU is Front 3/32	CH-47
Radio Terminal Set, AN/TRC-173	3,790	10K	ECU is Front 3/32	CH-47
Repeater Set, Radio, AN/TRC-174	4,100	10K	ECU is Front 3/32	CH-47
Radio Terminal Set, AN/TRC-175	4,690	10K	ECU is Front 3/32	CH-47
Regency Net Force Terminal, AN/TRC-179(V)1	8,200	10K	Door is Front 3/30	CH-47
Meteorological Data System (MDS)	4,750	10K	ECU is Front 3/35	CH-47
Position Location Reporting System Master Station, AN/TSQ-129	6,050	15K	ECU is Front 3/25	CH-53
Enhanced Position Location Reporting System, Net Control Station, AN/TSQ-158	6,289	15K	ECU is Front 3/33	CH-53
Tactical Satellite Communications Terminal, AN/TSC-85B	6,200	10K	Door is Front 3/33	CH-47
IFTE Base Shop Test Facility, (BSTF), Basic, S-280C/G, AN/TSM-191(V)3	7,806	10K	ECU is Front 3/3	CH-47
IFTE Base Shop Test Facility, (BSTF), HAWK, S-280C/G, AN/TSM-191(V)2	7,748	10K	ECU is Front 3/3	CH-47
IFTE 60 Hz Storage Shelter, S-280C/G, S-744/TSM-191V	6,365	10K	ECU is Front 3/3	CH-47
IFTE 400 Hz Storage Shelter, S-280C/G, S-175/TSM-191V	5,119	10K	ECU is Front 3/3	CH-47
Communications Nodal Control Element (CNCE), AN/TSQ-111	10,000	25K	Door is Front 3/24	CH-47
Airborne Reconnaissance Low-Imagery (ARL-I), and Airborne Reconnaissance Low-Comint (ARL-C), Fly Away Kits, Types A1/B1/C1	8,500	10K	ECU is Front 3/15	CH-47
Joint Stars MGSM LRIP Shelter System, OA-9408/TSQ-168(V)1	8,700	10K	Door is Front 3/30	CH-47
E0145 Bottle Cleaning and Charging Station	6,400	15K	Door is Front 3/25	CH-53
E1022 Maintenance Facility Night Sight	6,400	15K	Door is Front 3/25	CH-53

Table 10-3. Communication or Electronic Systems Housed in S-280 Shelters (Continued)

Nomenclature	*Max Weight (Pounds)*	*Sling Set*	*Link Count Front/Rear*	*Type of Aircraft*
Central Office, Telephone, Automatic, AN/TTC-42(V)	5,700	15K	Door is Front 3/25	CH-53
Airborne Mobile Direct Air Support Central (DASC), AN/UYQ-3A	5,600	15K	Door is Front 3/25	CH-53
AN/TYA-16B	3,325	15K	Door is Front 3/3	CH-53

- **Materials.** The following materials are required to rig this load:
  - Sling set (as listed in Table 10-3) with one additional apex fitting.

    OR
  - Sling set (15,000-pound capacity) (2 each).
  - Tape, adhesive, pressure-sensitive, 2-inch wide roll.
  - Cord, nylon, Type III, 550-pound breaking strength.
  - Webbing, cotton, 1/4-inch, 80-pound breaking strength.
  - Webbing, nylon, tubular, 1/2-inch, 1000-pound breaking strength.
- **Personnel.** Two persons can prepare and rig this load in 15 minutes.
- **Procedures.** The following procedures apply to this load:
  - **Preparation.** Prepare the load using the following steps:
    - Secure all loose equipment inside the shelter with tape or Type III nylon cord.
    - Close and secure all doors, vents, hatches, and caps with tape or Type III nylon cord.
    - Secure the Environmental Control Unit's cover with tape or Type III nylon cord. Ensure the ECU frame mounting bolts are tight.
    - Secure any external hoses, cables, ladders, and power unit components with tape or Type III nylon cord.
    - Tie the front and aft lift provisions in the upright position.
  - **Rigging.** Rig the load according to the steps in Figure 10-3.
  - **Hookup.** Two hookup teams stand on the roof of the shelter. The static discharge person discharges the static electricity. The forward hookup person places apex fitting 1 onto the forward cargo hook. The aft hookup person places apex fitting 2 onto the aft cargo hook. The hookup teams then carefully dismount the load and remain close to the load as the helicopter removes slack from the sling legs. When successful hookup is assured, the hookup teams quickly exit the area underneath the helicopter to the designated rendezvous point.

Note. Brief the helicopter crew to relax the sling leg tension and hover to the side of the load when releasing the apex fitting.

  - **Derigging.** Derigging is the reverse of the preparation and rigging procedures.

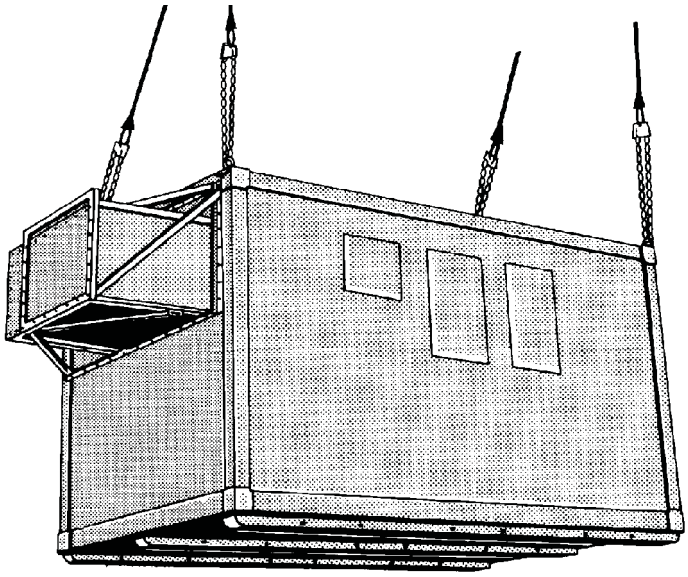

RIGGING STEPS

Note. The direction of flight is the front of the shelter as shown in the link count column of Table 10-3.

1. Place two sling legs on apex fitting number 1. Position apex fitting number 1 on top of the shelter.

2. Loop the chain end of the left and right sling legs through their respective lift provisions located on the shelter corners. Place the correct link from Table 10-3 in the grab hook.

3. Place two sling legs on apex fitting number 2. Position apex fitting number 2 on top of the shelter.

4. Loop the chain end of the left and right sling legs through their respective lift provisions located on the shelter corners. Place the correct link from Table 10-3 in the grab hook. Secure the excess chain with tape or Type III nylon cord.

5. Raise the apex fittings above the shelter. Cluster and tie (breakaway technique) the sling legs in each sling set together to prevent entanglement during hookup and lift-off.

Figure 10-3. S-280 Shelters

8- X 8- X 10-FOOT SHELTERS

10-5. The 8-x 8- x 10-foot shelters are rigged for dual-point sling load using the following procedures:

- **Applicability.** The following items in Table 10-4 are certified for the helicopter(s) listed in the following table by the US Army Natick Soldier Center:

Table 10-4. 8- x 8- x 10-Foot Shelters

Nomenclature	*Max Weight (Pounds)*	*Sling Set*	*Link Count Front/Rear*	*Type of Aircraft*
EMI, TAMCN C6110	7,700 Full Weight Only	15K	Door is Front 5/5	CH-53
Electronic EMI HSOP Shelter	4,140	15K	Door is Front 10/3	CH-53
Air Radar Shelter, AN/TPS-73	14,500	40K	Door is Front 3/12	CH-53
Air Radar Shelter, AN/TPS-63B	7,360	15K	Door is Front 3/20	CH-53
Rigid EMD Communications Shelter	7,000 Required	15K	Door is Front 3/3	CH-53

- **Materials.** The following materials are required to rig this load:
  - Sling set (40,000-pound capacity) with one additional apex fitting.

    OR
  - Sling set (15,000-pound capacity) (2 each).
  - Tape, adhesive, pressure-sensitive, 2-inch wide roll.
  - Cord, nylon, Type III, 550-pound breaking strength.
  - Webbing, cotton, 1/4-inch, 80-pound breaking strength.
- **Personnel.** Two persons can prepare and rig this load in 15 minutes.
- **Procedures.** The following procedures apply to this load:
  - **Preparation.** Prepare the load using the following steps:
    - Secure all loose equipment inside the shelter with tape or Type III nylon cord.
    - Close and secure all doors, vents, hatches, and caps with tape or Type III nylon cord.
    - Secure the Environmental Control Unit's cover with tape or Type III nylon cord. Ensure the ECU frame mounting bolts are tight.
    - Secure any external hoses, cables, ladders, and power unit components with tape or Type III nylon cord.
  - **Rigging.** Rig the load according to the steps in Figure 10-4.

Note. When using the 15,000-pound capacity multileg sling set, tie or tape the inner sling legs to the outer sling legs.

  - **Hookup.** Two hookup teams stand on the roof of the shelter. The static discharge person discharges the static electricity. The forward hookup person places apex fitting 1 onto the forward cargo hook. The aft hookup person places apex fitting 2 onto the aft cargo hook. The hookup teams then carefully dismount the load and remain close to the load as the helicopter removes slack from the sling legs. When successful hookup is assured, the hookup teams quickly exit the area underneath the helicopter to the designated rendezvous point.

Note. Brief the helicopter crew to relax the sling leg tension and hover to the side of the load when releasing the apex fitting.

  - **Derigging.** Derigging is the reverse of the preparation and rigging procedures.

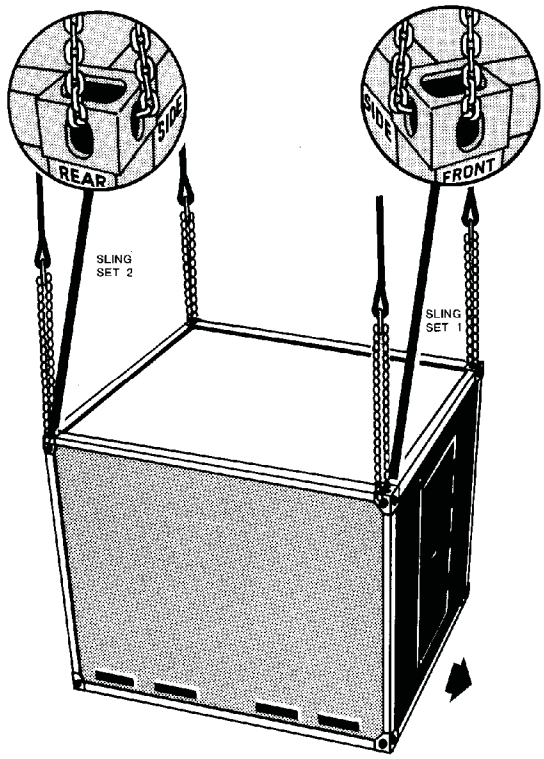

RIGGING STEPS

1. Place two sling legs on apex fitting number 1. Position apex fitting number 1 on top of the shelter.

2. Loop the chain end of the left and right sling legs through their respective lift provisions located on the shelter corners. Place the correct link from Table 10-4 in the grab hook.

3. Place two sling legs on apex fitting number 2. Position apex fitting number 2 on top of the shelter.

4. Loop the chain end of the left and right sling legs through their respective lift provisions located on the shelter corners. Place the correct link from Table 10-4 in the grab hook. Secure the excess chain with tape or Type III nylon cord.

5. Raise the apex fittings above the shelter. Cluster and tie (breakaway technique) the sling legs in each sling set together to prevent entanglement during hookup and lift-off.

Figure 10-4. 8- x 8-x 10-Foot Shelters

8- X 8- X 20-FOOT SHELTERS

10-6. The 8- x 8- x 20-foot shelters are rigged for dual-point sling load using the following procedures:

- **Applicability.** The following items in Table 10-5 are certified for the helicopter(s) listed in the following table by the US Army Natick Soldier Center:

Table 10-5. 8- x 8- x 20-Foot Shelters

Nomenclature	*Max Weight (Pounds)*	*Sling Set*	*Link Count Front/Rear*	*Type of Aircraft*
Communications Central, ANTGC37	16,733	40K	Door is Aft 30/30	CH-53
Rigid Shelter, General Purpose, TAMCN C6122	15,000	40K	Door is Front 10/5	CH-53
Electromechanical Induction (EMI)	15,000	40K	Door is Front 10/5	CH-53
Tactical Air Operations Module (TAOM), AN/TYQ-23	16,175	40K	Door is Front 16/3	CH-53
Tactical Air Operations Module (TAOM), AN/TYQ-23, Up Graded	15,187	40K	Door is Front 16/3	CH-53
Maintenance Repair Group Shelter, AN/TSM-170	10,900	15K	Door is Front 31/3	CH-53
Radar Surveillance Center, AN/TSQ-107	9,950	15K	Door is Front 21/3	CH-53
Control and Communications Shelter, AN/TSQ-131	14,050	40K	Door is Front 21/3	CH-53
Non-Divisional AVIM Shop, Machine/ Welding Shop	Min – 11,000 Max – 13,200	25K	5/5	CH-47
Non-Divisional AVIM Shop, Pneudraulics Shop	Min – 11,000 Max – 13,200	25K	5/5	CH-47
Non-Divisional AVIM Shop, Power Train Shop	Min – 11,000 Max – 13,200	25K	Door is Aft 5/5	CH-47
Non-Divisional AVIM Shop, Engine Shop	Min – 11,000 Max – 13,200	25K	Door is Aft 5/5	CH-47
Non-Divisional AVIM Shop, Sheet Metal/Paint Shop	Min – 11,000 Max – 13,200	25K	Door is Aft 5/5	CH-47
Non-Divisional AVIM Shop, Tool Crib Shop	Min – 11,000 Max – 13,200	25K	Door is Aft 5/5	CH-47
Non-Divisional AVIM Shop, Propeller/Rotor Shop	Min – 11,000 Max – 13,200	25K	Door is Aft 5/5	CH-47
Non-Divisional AVIM Shop, Electrical/Instrument Shop	Min – 11,000 Max – 13,200	25K	Door is Aft 5/5	CH-47
Non-Divisional AVIM Shop, Production/Quality Control Shop	Min – 11,000 Max – 13,200	25K	Door is Aft 5/5	CH-47
AN/TSQ-108A(V)2	13,050	15K	ECU is Aft 3/20	CH-53
Improved Direct Air Support Center	10,000	15K	Door is Front 9 – Left Side 3 – Right Side	CH-53
Shop Set, Maintenance Facility Night Sight, E1713	8,400	15K	Door is Front 3/35	CH-53
Shop Set, Maintenance Artillery, E1712	8,400	15K	Door is Front 3/35	CH-53

Table 10-5. 8- x 8- x 20-Foot Shelters (Continued)

Nomenclature	*Max Weight (Pounds)*	*Sling Set*	*Link Count Front/Rear*	*Type of Aircraft*
Shop Set, Maintenance Small Arms, E1714	8,400	15K	Door is Front 3/40	CH-53
Trojan Transportable Mini-Switch (TTMS) ISO Shelter	14,700	25K	Door is Front 3/3	CH-47
EMI, EMC, S717T, Communications, TAMCN A2336	6,400	15K	Door is Front 3/3	CH-53
Non-Expandable Communications, TAMCN A2337	10,000	15K	Door is Front 3/3	CH-53
Tactical Reconnaissance Processing Evaluation System (TERPES)	13,200	15K	Door is Front 15/3	CH-53
Trojan Air Transportable Electronic Reconnaissance System (TATERS), SCINS Communications Subsystem Shelter	13,320	25K	Data Plate is Front 3/20	CH-47
Trojan Air Transportable Electronic Reconnaissance System (TATERS), TOTS Nonexpandable Shelter	10,720	25K	Data Plate is Front 3/20	CH-47
Trojan Air Transportable Electronic Reconnaissance System (TATERS), CHIPS Receiver Group Shelter	14,220	25K	Data Plate is Front 3/20	CH-47
Trojan Air Transportable Electronic Reconnaissance System (TATERS), PEELS Electric Power Plant Shelter	15,100	25K	Data Plate is Front 3/20	CH-47
Containerized Shower (CS)	10,070	25K	Data Plate is Front 3/20	CH-47
Standard Automotive Tools Set (SATS) with Core Tool Set	10,760	25K	Door is Front 5/5	CH-47
Standard Automotive Tools Set with Core and Mod 1 Tool Set	12,660	25K	Door is Front 5/5	CH-47
Standard Automotive Tools Set with Core and Mod 1 and Mod 2 Tool Sets	13,420	25K	Door is Front 5/5	CH-47

- **Materials.** The following materials are required to rig this load:
  - Sling set (as listed in Table 10-5) with one additional apex fitting.

    OR
  - Sling set (15,000-pound capacity) (2 each).
  - Tape, adhesive, pressure-sensitive, 2-inch wide roll.
  - Cord, nylon, Type III, 550-pound breaking strength.
  - Webbing, cotton, 1/4-inch, 80-pound breaking strength.
- **Personnel.** Two persons can prepare and rig this load in 20 minutes.
- **Procedures.** The following procedures apply to this load:
  - **Preparation.** Prepare the load using the following steps:
    - Secure all loose equipment inside the shelter with tape or Type III nylon cord.
    - Close and secure all doors, vents, hatches, and caps with tape or Type III nylon cord.
    - Secure the Environmental Control Unit's cover with tape or Type III nylon cord. Ensure the ECU frame mounting bolts are tight.

- **Rigging.** Rig the load according to the steps in Figure 10-5.

Note. When using the 15,000-pound capacity multileg sling set, tie or tape the inner sling legs to the outer sling legs.

- **Hookup.** Two hookup teams stand on the roof of the shelter. The static discharge person discharges the static electricity. The forward hookup person places apex fitting 1 onto the forward cargo hook. The aft hookup person places apex fitting 2 onto the aft cargo hook. The hookup teams then carefully dismount the load and remain close to the load as the helicopter removes slack from the sling legs. When successful hookup is assured, the hookup teams quickly exit the area underneath the helicopter to the designated rendezvous point.

Note. Brief the helicopter crew to relax the sling leg tension and hover to the side of the load when releasing the apex fitting.

- **Derigging**. Derigging is the reverse of the preparation and rigging procedures.

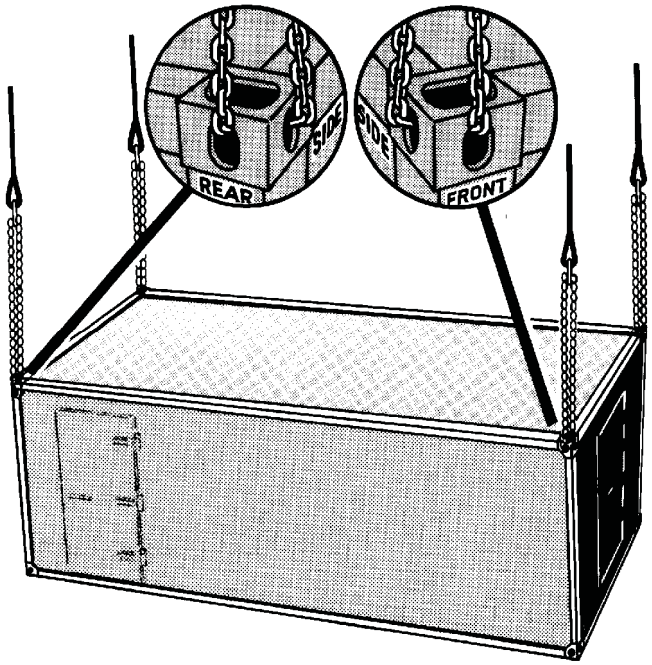

RIGGING STEPS

Note. The direction of flight is the front of the shelter as shown in the link count column of Table 10-5.

1. Place two sling legs on apex fitting number 1. Position apex fitting number 1 on top of the shelter.

2. Loop the chain end of the left and right sling legs through their respective lift provisions located on the front shelter corners. Place the correct link from Table 10-5 in the grab hook.

3. Place two sling legs on apex fitting number 2. Position apex fitting number 2 on top of the shelter.

Figure 10-5. 8- x 8-x 20-Foot Shelters

RIGGING STEPS (Continued)
4. Loop the chain end of the left and right sling legs through their respective lift provisions located on the aft shelter corners. Place the correct link from Table 10-5 in the grab hook. Secure the excess chain with tape or Type III nylon cord. 5. Raise the apex fittings above the shelter. Cluster and tie (breakaway technique) the sling legs in each sling set together to prevent entanglement during hookup and lift-off.

Figure 10-5. 8-x 8-x 20-Foot Shelters (Continued)

AN/TYC-5A DATA COMMUNICATIONS TERMINAL

10-7. The AN/TYC-5A data communications terminal is rigged for dual-point sling load using the following procedures:

- **Applicability.** The following item in Table 10-6 is certified for the helicopter(s) listed in the following table by the US Army Natick Soldier Center:

Table 10-6. AN/TYC-5A Data Communications Terminal

Nomenclature	*Max Weight (Pounds)*	*Sling Set*	*Link Count Front/Rear*	*Type of Aircraft*
AN/TYC-5A Data Communications Terminal	7,451	15K	Door is Front 5/20	CH-53

- **Materials.** The following materials are required to rig this load:
  - Sling set (15,000-pound capacity) (2 each).
  - Tape, adhesive, pressure-sensitive, 2-inch wide roll.
  - Cord, nylon, Type III, 550-pound breaking strength.
  - Webbing, cotton, 1/4-inch, 80-pound breaking strength.
- **Personnel.** Two persons can prepare and rig this load in 10 minutes.
- **Procedures.** The following procedures apply to this load:
  - **Preparation.** Prepare the load using the following steps:
    - Secure all loose equipment inside the shelter with tape or Type III nylon cord.
    - Close and secure all doors, vents, hatches, and caps with tape or Type III nylon cord.
    - Remove the transporter dolly lift sets if attached to the shelter.
  - **Rigging.** Rig the load according to the steps in Figure 10-6.

Note. When using the 15,000-pound capacity multileg sling set, tie or tape the inner sling legs to the outer sling legs.

  - **Hookup.** Two hookup teams stand on the roof of the shelter. The static discharge person discharges the static electricity. The forward hookup person (door end) places apex fitting 1 onto the forward cargo hook. The aft hookup person places apex fitting 2 onto the aft cargo hook. The hookup teams then carefully dismount the load and remain close to the load as the helicopter removes slack from the sling legs. When successful hookup is assured, the hookup teams quickly exit the area underneath the helicopter to the designated rendezvous point.

Note. Brief the helicopter crew to relax the sling leg tension and hover to the side of the load when releasing the apex fitting.

  - **Derigging.** Derigging is the reverse of the preparation and rigging procedures.

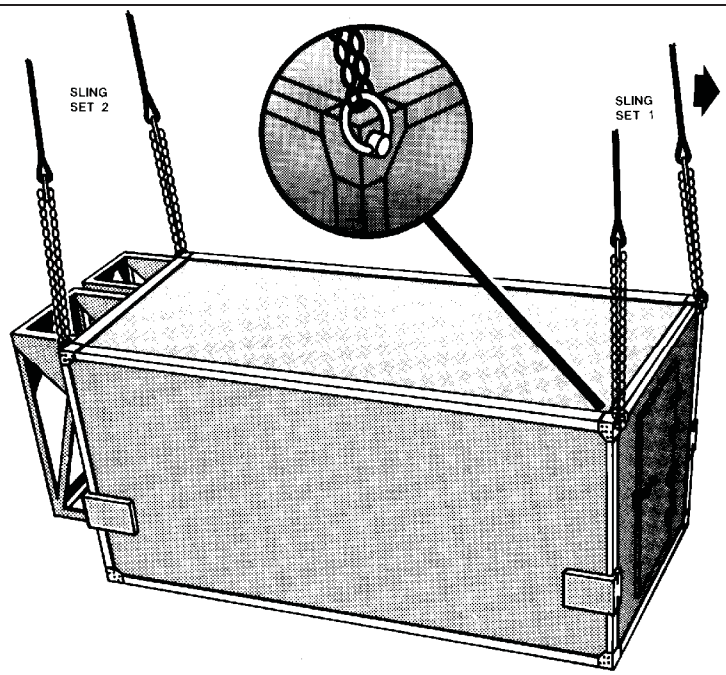

RIGGING STEPS

1. Position sling set number 1 on top of the door end of the shelter.
2. Loop the chain end of the left and right sling legs through their respective lift provisions located on the shelter corners. Place the correct link from Table 10-6 in the grab hook.
3. Position sling set number 2 on top of the shelter.
4. Loop the chain end of the left and right sling legs through their respective lift provisions located on the shelter corners. Place the correct link from Table 10-6 in the grab hook.
5. Raise the apex fittings above the shelter. Cluster and tie (breakaway technique) the sling legs in each sling set together to prevent entanglement during hookup and lift-off.

Figure 10-6. AN/TYC-5A Data Communications Terminal

SHELTER, KNOCKDOWN, 8- X 8- X 20-FOOT

10-8. The shelter, knockdown, 8- x 8- x 20-foot is rigged for dual-point sling load using the following procedures:

- **Applicability.** The following item in Table 10-7 is certified for the helicopter(s) listed in the following table by the US Army Natick Soldier Center:

Table 10-7. Shelter, Knockdown, 8- x 8- x 20-Foot

Nomenclature	*Max Weight (Pounds)*	*Sling Set*	*Link Count Front/Rear*	*Type of Aircraft*
Shelter, Knockdown, 8- x 8- x 20-Foot	3,800	15K	5/10	CH-53

- **Materials.** The following materials are required to rig this load:
  - Sling set (15,000-pound capacity) (2 each).

- Tape, adhesive, pressure-sensitive, 2-inch wide roll.
- Cord, nylon, Type III, 550-pound breaking strength.
- Webbing, cotton, 1/4-inch, 80-pound breaking strength.

- **Personnel.** Two persons can prepare and rig this load in 10 minutes.
- **Procedures.** The following procedures apply to this load:
  - **Preparation.** Prepare the load using the following steps:
    - Ensure the shelter is properly knocked down and secured.
    - Secure the knockdown shelter corner pins with tape.
  - **Rigging.** Rig the load according to the steps in Figure 10-7.

Note. When using the 15,000-pound capacity multileg sling set, tie or tape the inner sling legs to the outer sling legs.

- **Hookup.** Two hookup teams stand on the shelter. The static discharge person discharges the static electricity. The forward hookup person places apex fitting 1 onto the forward cargo hook. The aft hookup person places apex fitting 2 onto the aft cargo hook. The hookup teams then carefully dismount the load and remain close to the load as the helicopter removes slack from the sling legs. When successful hookup is assured, the hookup teams quickly exit the area underneath the helicopter to the designated rendezvous point.

Note. Brief the helicopter crew to relax the sling leg tension and hover to the side of the load when releasing the apex fitting.

- **Derigging.** Derigging is the reverse of the preparation and rigging procedures.

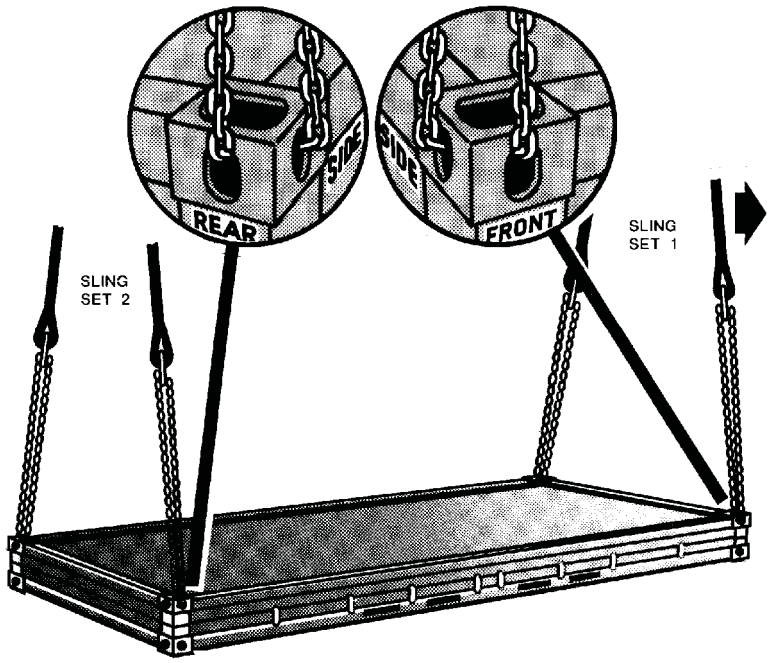

Figure 10-7. Shelter, Knockdown, 8- x 8- x 20-Foot

RIGGING STEPS
1. Position sling set number 1 on top of the shelter. 2. Loop the chain end of the left and right sling legs through the side and out the front of their respective lift provisions located on the shelter corners. Place the correct link from Table 10-7 in the grab hook. 3. Position sling set number 2 on top of the shelter. 4. Loop the chain end of the left and right sling legs through side and out the rear of their respective lift provisions located on the shelter corners. Place the correct link from Table 10-7 in the grab hook. Secure the excess chain with tape or Type III nylon cord. 5. Raise the apex fittings above the shelter. Cluster and tie (breakaway technique) the sling legs in each sling set together to prevent entanglement during hookup and lift-off.

Figure 10-7. Shelter, Knockdown, 8- x 8- x 20-Foot (Continued)

JAM-RESISTANT SECURE COMMUNICATIONS (JRSC) SATELLITE COMMUNICATIONS TERMINAL WITH MOBILIZER

10-9. The jam-resistant secure communications satellite communications terminal with mobilizer is rigged for dual-point sling load using the following procedures:

- **Applicability.** The following item in Table 10-8 is certified for the helicopter(s) listed in the following table by the US Army Natick Soldier Center:

Table 10-8. Jam-Resistant Secure Communications (JRSC) Satellite Communications Terminal with Mobilizer

Nomenclature	*Max Weight (Pounds)*	*Sling Set*	*Link Count Front/Rear*	*Type of Aircraft*
Jam-Resistant Secure Communications Satellite Communications Terminal with Mobilizer	20,730	25K	Door is Front 10/30	CH-47

- **Materials.** The following materials are required to rig this load:
  - Sling set (25,000-pound capacity) with one additional apex fitting.
  - Tape, adhesive, pressure-sensitive, 2-inch wide roll.
  - Cord, nylon, Type III, 550-pound breaking strength.
  - Webbing, cotton, 1/4-inch, 80-pound breaking strength.
  - Webbing, tubular, nylon, 1/2-inch, 1,000-pound breaking strength.
- **Personnel.** Two persons can prepare and rig this load in 10 minutes.
- **Procedures.** The following procedures apply to this load:
  - **Preparation.** Prepare the load using the following steps:
    - Raise and stow mobilizer wheels.
    - Stow the mobilizer tongue in the up position using safety chain and Type III nylon cord. Secure the hoses and jack handles with tape or Type III nylon cord.
    - Secure the mobilizer wheel assemblies to the shelter lift eyes. Route an end of 1/2-inch tubular nylon through the cutout in the mobilizer wheel rim and pass it through the shelter lift eye. Tie the ends together with a square knot and an overhand knot in each running end.
    - Close and secure all doors, vents, and caps.

- **Rigging.** Rig the load according to the steps in Figure 10-8.
- **Hookup.** Two hookup teams stand on the shelter. The static discharge person discharges the static electricity. The forward hookup person stands on the door end of the shelter and places apex fitting 1 onto the forward cargo hook. The aft hookup person places apex fitting 2 onto the aft cargo hook. The hookup teams then carefully dismount the load and remain close to the load as the helicopter removes slack from the sling legs. When successful hookup is assured, the hookup teams quickly exit the area underneath the helicopter to the designated rendezvous point.

Note. Brief the helicopter crew to relax the sling leg tension and hover to the side of the load when releasing the apex fitting.

- **Derigging.** Derigging is the reverse of the preparation and rigging procedures.

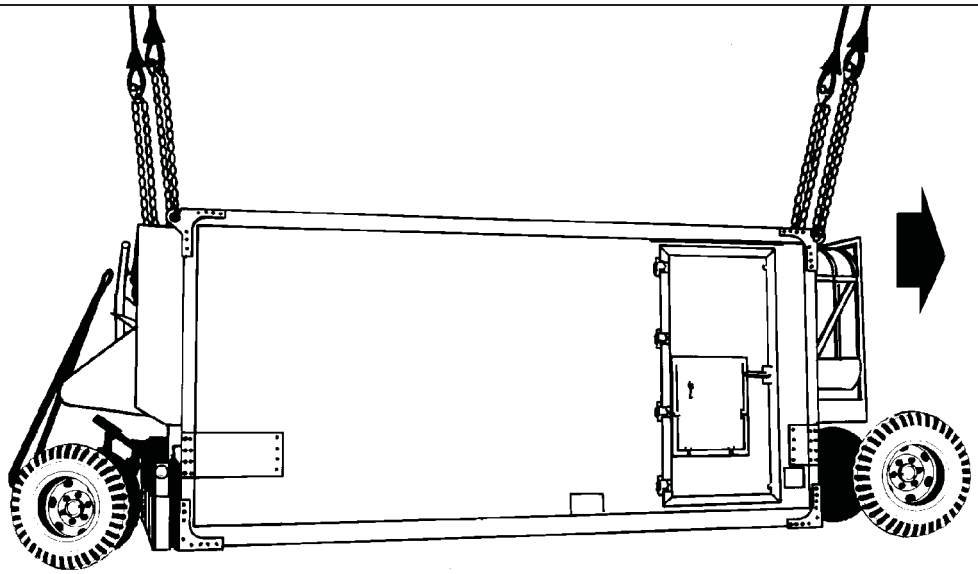

RIGGING STEPS

1. Place two sling legs on apex fitting number 1. Position apex fitting number 1 on top of the shelter (door end).
2. Loop the chain end of the left and right sling legs through their respective lift provisions located on the shelter corners. Place the correct link from Table 10-8 in the grab hook. Secure the excess chain with tape or Type III nylon cord.
3. Place two sling legs on apex fitting number 2. Position apex fitting number 2 on top of the shelter.
4. Loop the chain end of the left and right sling legs through their respective lift provisions located on the shelter corners. Place the correct link from Table 10-8 in the grab hook. Secure the excess chain with tape or Type III nylon cord.
5. Raise the apex fittings above the shelter. Cluster and tie (breakaway technique) the sling legs in each sling set together to prevent entanglement during hookup and lift-off.

Figure 10-8. Jam-Resistant Secure Communications Satellite Communications Terminal

DOWNSIZED DIGITAL GROUP MULTIPLEXER (DGM) ASSEMBLAGES

10-10. The downsized digital group multiplexer assemblages are rigged for dual-point sling load using the following procedures:

- **Applicability.** The following items in Table 10-9 are certified for the helicopter(s) listed in the following table by the US Army Natick Soldier Center:

Table 10-9. Downsized Digital Group Multiplexer Assemblages

Nomenclature	*Max Weight (Pounds)*	*Sling Set*	*Link Count Front/Rear*	*Type of Aircraft*
AN/TRC-173A	3,500	10K	3/3	CH-47
AN/TRC-174A	3,425	10K	3/3	CH-47
AN/TRC-175A	3,350	10K	3/3	CH-47
AN/TRC-138B	3,525	10K	3/3	CH-47
AN/TRC-138C	3,430	10K	3/3	CH-47

- **Materials.** The following materials are required to rig this load:
  - Sling set (10,000-pound capacity) with one additional apex fitting.
  - Tape, adhesive, pressure-sensitive, 2-inch wide roll.
  - Cord, nylon, Type III, 550-pound breaking strength.
  - Webbing, cotton, 1/4-inch, 80-pound breaking strength.
- **Personnel.** Two persons can prepare and rig this load in 20 minutes.
- **Procedures.** The following procedures apply to this load:
  - **Preparation.** Prepare the load using the following steps:
    - Ensure all internal equipment is properly stowed.
    - Secure all cabinet drawers and doors with tape or Type III nylon cord.
    - Secure all outer doors with tape.
    - Secure the ECU cover with tape or Type III nylon cord.
  - **Rigging.** Rig the load according to the steps in Figure 10-9.

CAUTION

These loads are certified for the center and aft hooks only. Pilots must ensure that hook jettisoning switches are engaged for center and aft hooks. DO NOT USE THE FORWARD HOOK.

  - **Hookup.** Two hookup teams stand on the shelter. The static discharge person discharges the static electricity. The forward hookup person stands on the roadside door end of the shelter and places apex fitting 1 onto the center cargo hook. The aft hookup person places apex fitting 2 onto the aft cargo hook. **DO NOT USE THE FORWARD HOOK.** The hookup teams then carefully dismount the load and remain close to the load as the helicopter removes slack from the sling legs. When successful hookup is assured, the hookup teams quickly exit the area underneath the helicopter to the designated rendezvous point.
  - **Derigging.** Derigging is the reverse of the preparation and rigging procedures.

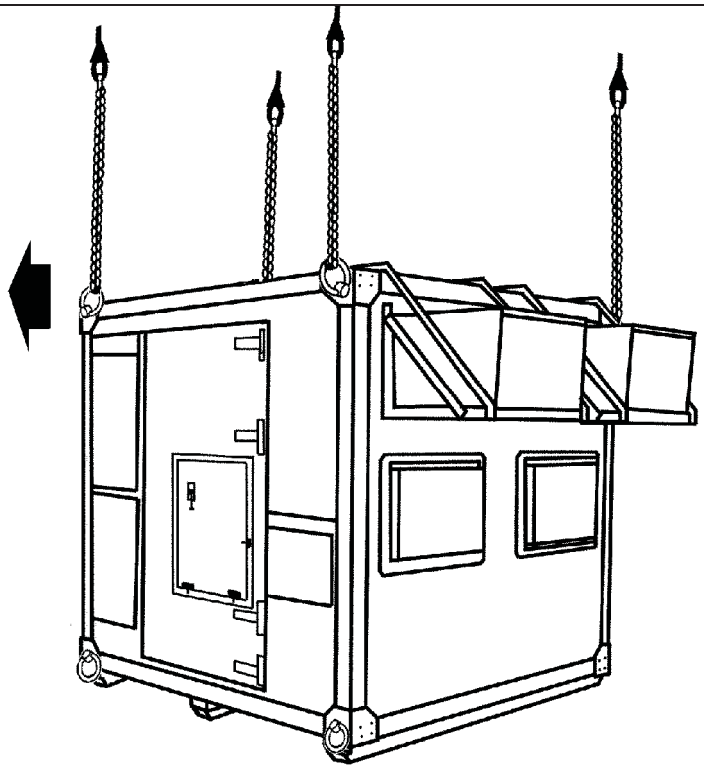

RIGGING STEPS

1. Place two sling legs on apex fitting number 1. Position apex fitting number 1 on top of the shelter.

2. Loop the chain end of the left and right sling legs through their respective lift provisions located on the shelter corners. Place the correct link from Table 10-9 in the grab hook.

3. Place two sling legs on apex fitting number 2. Position apex fitting number 2 on top of the shelter.

4. Loop the chain end of the left and right sling legs through their respective lift provisions located on the shelter corners. Place the correct link from Table 10-9 in the grab hook.

5. Raise the apex fittings above the shelter. Cluster and tie (breakaway technique) the sling legs in each sling set together to prevent entanglement during hookup and lift-off.

Figure 10-9. Downsized Digital Group Multiplexer Assemblages

NATO AIRBASE SATCOM (NABS) SHELTER PALLET, AN/TSC-93B (V) 2

10-11. The NATO airbase satcom shelter pallet, AN/TSC-93B (V) 2 is rigged for dual-point sling load using the following procedures:

- **Applicability.** The following items in Table 10-10 are certified for the helicopter(s) listed in the following table by the US Army Natick Soldier Center:

Table 10-10. NATO Airbase Satcom Shelter Pallet, AN/TSC-93B (V) 2

Nomenclature	*Max Weight (Pounds)*	*Sling Set*	*Link Count Front/Rear*	*Type of Aircraft*
NATO Airbase Satcom Shelter Pallet, AN/TSC-93B (V) 2	5,751	10K	3/3	CH-47

- **Materials.** The following materials are required to rig this load:
  - Sling set (10,000-pound capacity) with one additional apex fitting.
  - Tape, adhesive, pressure-sensitive, 2-inch wide roll.
  - Cord, nylon, Type III, 550-pound breaking strength.
  - Webbing, cotton, 1/4-inch, 80-pound breaking strength.
- **Personnel.** Two persons can prepare and rig this load in 20 minutes.
- **Procedures.** The following procedures apply to this load:
  - **Preparation.** Prepare the load using the following steps:
    - Secure all loose equipment on the pallet and in the shelter with tape or Type III nylon cord.
    - Close and secure all doors, vents, and covers. Tape all exhaust covers.
    - Remove the cargo cover and secure it inside the shelter.
  - **Rigging.** Rig the load according to the steps in Figure 10-10.

CAUTION

Do not use the lift provisions on the shelter.

  - **Hookup.** Two hookup teams stand on the shelter. The static discharge person discharges the static electricity. The forward hookup person places apex fitting 1 onto the forward cargo hook. The aft hookup person places apex fitting 2 onto the aft cargo hook. The hookup teams then carefully dismount the load and remain close to the load as the helicopter removes slack from the sling legs. When successful hookup is assured, the hookup teams quickly exit the area underneath the helicopter to the designated rendezvous point.

Note. Brief the helicopter crew to relax the sling leg tension and hover to the side of the load when releasing the apex fitting.

  - **Derigging.** Derigging is the reverse of the preparation and rigging procedures.

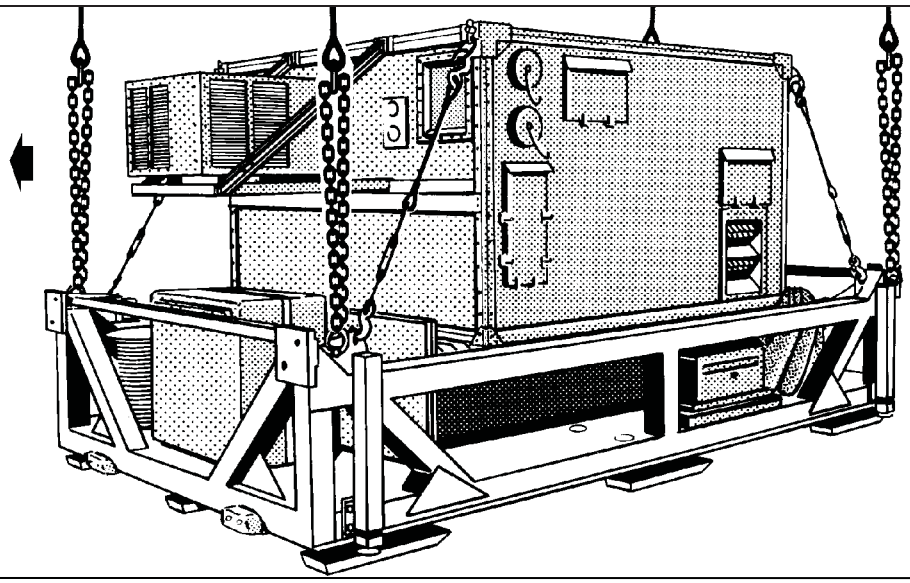

RIGGING STEPS

1. Place two sling legs on apex fitting number 1. Position apex fitting number 1 on top of the shelter.

2. Loop the chain end of the left and right sling legs through their respective lift provisions located on the forward corners of the pallet. Place the correct link from Table 10-10 in the grab hook.

3. Place two sling legs on apex fitting number 2. Position apex fitting number 2 on top of the shelter.

4. Loop the chain end of the left and right sling legs through their respective lift provisions located on the aft corners of the pallet. Place the correct link from Table 10-10 in the grab hook.

5. Raise the apex fittings above the shelter. Cluster and tie (breakaway technique) the sling legs in each sling set together to prevent entanglement during hookup and lift-off.

Figure 10-10. NATO Airbase Satcom (NABS) Shelter Pallet, AN/TSC-93B(V)2

TROJAN AIR TRANSPORTABLE ELECTRONIC RECONNAISSANCE SYSTEM (TATERS) HIGH GAIN ANTENNA GROUP (HGAG) SHELTER

10-12. The trojan air transportable electronic reconnaissance system high gain antenna group shelter is rigged for dual-point sling load using the following procedures:

- **Applicability.** The following item in Table 10-11 is certified for the helicopter(s) listed in the following table by the US Army Natick Soldier Center:

Table 10-11. Trojan Air Transportable Electronic Reconnaissance System High Gain Antenna Group Shelter

Nomenclature	*Max Weight (Pounds)*	*Sling Set*	*Link Count Front/Rear*	*Type of Aircraft*
Trojan Air Transportable Electronic Reconnaissance System High Gain Antenna Group Shelter	12,750	25K	3/20	CH-47

- **Materials.** The following materials are required to rig this load:
  - Sling set (25,000-pound capacity) with one additional apex fitting.
    - Additional chain length, part number 38850-00053-102, from a 25,000-pound capacity sling set (8 each).
    - Additional coupling link, part number 664241, from a 25,000-pound capacity sling set (8 each).
  - Tape, adhesive, pressure-sensitive, 2-inch wide roll.
  - Cord, nylon, Type III, 550-pound breaking strength.
  - Webbing, cotton, 1/4-inch, 80-pound breaking strength.
- **Personnel.** Two persons can prepare and rig this load in 25 minutes.
- **Procedures.** The following procedures apply to this load:
  - **Preparation.** Prepare the load using the following steps:
    - Secure all loose equipment with tape or Type III nylon cord.
    - Close and secure all doors, vents, and hatches with tape or Type III nylon cord.
    - Add two additional chain lengths to each sling leg chain using the additional coupling links.
  - **Rigging.** Rig the load according to the steps in Figure 10-11.
  - **Hookup.** Two hookup teams stand on the HGAG. The static discharge person discharges the static electricity. The forward hookup person places apex fitting 1 onto the forward cargo hook. The aft hookup person places apex fitting 2 onto the aft cargo hook. The hookup teams then carefully dismount the load and remain close to the load as the helicopter removes slack from the sling legs. When successful hookup is assured, the hookup teams quickly exit the area underneath the helicopter to the designated rendezvous point.
  - **Derigging.** Derigging is the reverse of the preparation and rigging procedures.

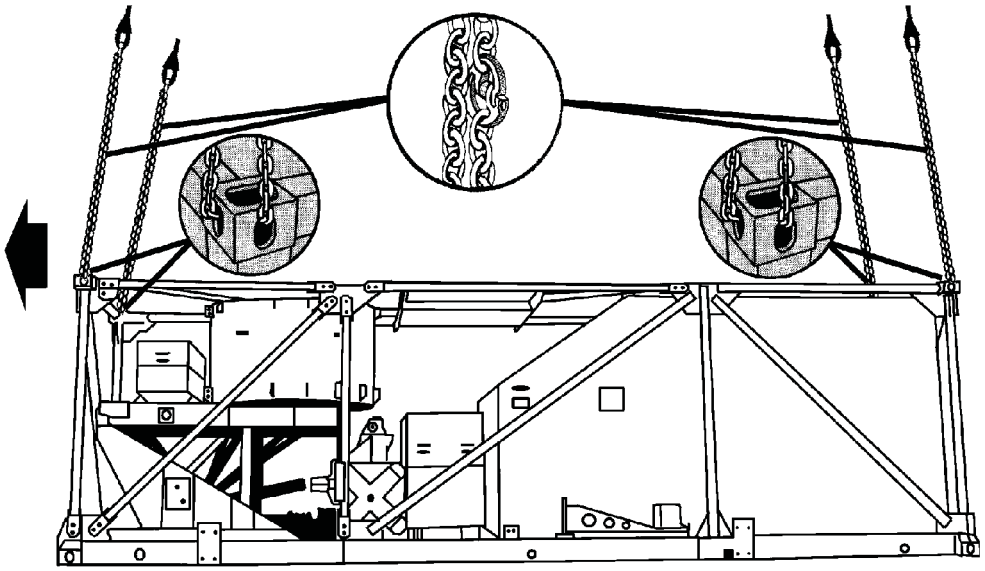

RIGGING STEPS

1. Place two sling legs on apex fitting number 1. Position apex fitting number 1 on top of the shelter.

2. Loop the chain end of the left and right sling legs through their respective lift provisions located on the forward corners. Place the correct link from Table 10-11 in the grab hook.

3. Place two sling legs on apex fitting number 2. Position apex fitting number 2 on top of the aft end of the shelter.

4. Loop the chain end of the left and right sling legs through their respective lift provisions located on the aft corners of the shelter. Place the correct link from Table 10-11 in the grab hook. Secure the excess chain with tape or Type III nylon cord.

5. Raise the apex fittings above the shelter. Cluster and tie (breakaway technique) the sling legs in each sling set together to prevent entanglement during hookup and lift-off.

Figure 10-11. Trojan Air Transportable Electronic Reconnaissance System High Gain Antenna Group Shelter

DIGITAL TECH CONTROLLER (DTC) HOUSED IN A MODIFIED GITCHNER SHELTER

10-13. The digital tech controller housed in a modified gitchner shelter is rigged for dual-point sling load using the following procedures:

- **Applicability.** The following item in Table 10-12 is certified for the helicopter(s) listed in the following table by the US Army Natick Soldier Center:

Table 10-12. Digital Tech Controller Housed in a Modified Gitchner Shelter

Nomenclature	*Max Weight (Pounds)*	*Sling Set*	*Link Count Front/Rear*	*Type of Aircraft*
Digital Tech Controller Housed in a Modified Gitchner Shelter	9,100	15K	Door is Front 3/30	CH-53

- **Materials.** The following materials are required to rig this load:
  - Multileg sling set (15,000-pound capacity) with one additional web ring.
  - Tape, adhesive, pressure-sensitive, 2-inch wide roll.
  - Cord, nylon, Type III, 550-pound breaking strength.
  - Webbing, cotton, 1/4-inch, 80-pound breaking strength.
- **Personnel.** Two persons can prepare and rig this load in 20 minutes.
- **Procedures.** The following procedures apply to this load:
  - **Preparation.** Prepare the load using the following steps:
    - Inspect the inside and outside of the DTC for any sign of skin separation (delamination) from the frame structure.

WARNING

Any separation of the skin from the structural members may indicate a reduction in structural integrity and should not be flown.

    - Remove all antennas. Disassemble and securely stow inside the shelter.
    - Close and secure all doors, vents, and caps with tape or Type III nylon cord.
    - Secure all loose equipment (antennas, electrical lines, hoses, etc.) inside the shelter with tape or Type III nylon cord.
    - Ensure all the bolts in the environmental control unit (ECU) mounting frame are present and tight.
    - Secure the ECU cover, if installed, with tape or Type III nylon cord.
    - Secure the lift rings in a vertical position with Type III nylon cord.
  - **Rigging.** Rig the load according to the steps in Figure 10-12.
  - **Hookup.** Two hookup teams stand on the DTC. The static discharge person discharges the static electricity. The forward hookup person places apex fitting 1 onto the forward cargo hook. The aft hookup person places apex fitting 2 onto the aft cargo hook. The hookup teams then carefully dismount the load and remain close to the load as the helicopter removes slack from the sling legs. When successful hookup is assured, the hookup teams quickly exit the area underneath the helicopter to the designated rendezvous point.
  - **Derigging.** Derigging is the reverse of the preparation and rigging procedures.

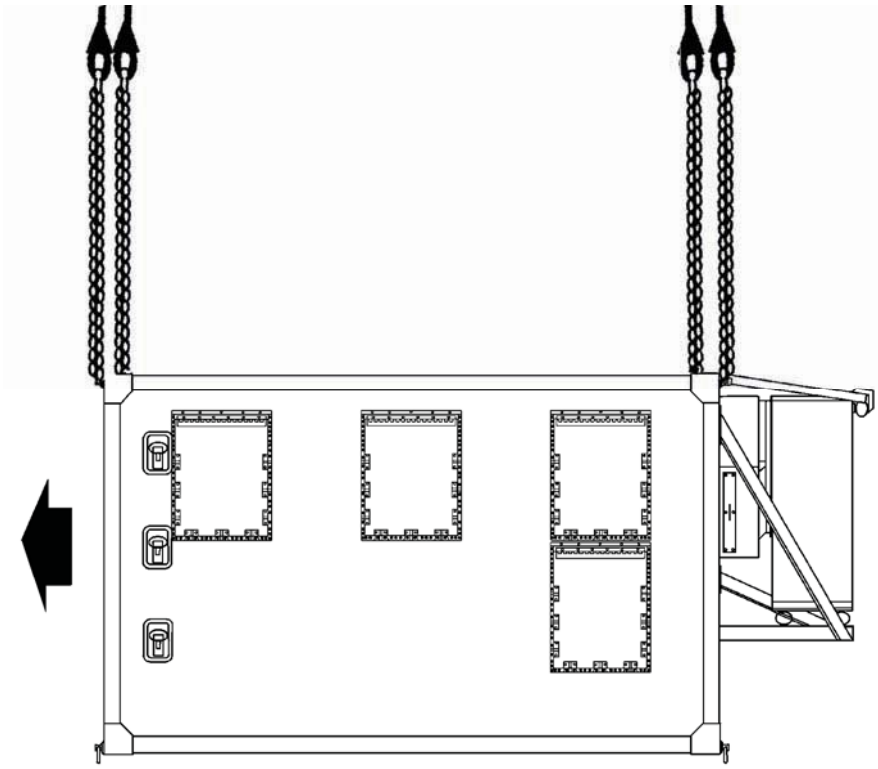

RIGGING STEPS

1. Place two sling legs on apex fitting number 1. Position apex fitting number 1 on top of the shelter.

2. Loop the chain end of the left and right sling legs through their respective lift provisions located on the forward corners. Place the correct link from Table 10-12 in the grab hook.

3. Place two sling legs on apex fitting number 2. Position apex fitting number 2 on top of the aft end of the shelter.

4. Loop the chain end of the left and right sling legs through their respective lift provisions located on the aft corners of the shelter. Place the correct link from Table 10-12 in the grab hook. Secure the excess chain with tape or Type III nylon cord.

5. Raise the apex fittings above the shelter. Cluster and tie (breakaway technique) the sling legs in each sling set together to prevent entanglement during hookup and lift-off.

Figure 10-12. Digital Tech Controller Housed in a Modified Gitchner Shelter

This page intentionally left blank.

Chapter 11

Certified Dual-Point Rigging Procedures for Containers

INTRODUCTION

11-1. This chapter contains rigging procedures for dual-point lift of containers that have been certified for sling load. Each rigging procedure is found in a paragraph that includes a description of the load, materials required for rigging, and steps to complete the procedure. An applicability paragraph is also a part of each paragraph and identifies the certified loads. The certified dual-point rigging procedures for containers are in this section. Paragraphs 11-2 through 11-8 give detailed instructions for rigging loads.

Note. Reach Pendants may be used on dual point loads. Place a Reach Pendant on each apex fitting. A static discharge person is not required when using a Reach Pendant.

FULL-UP POWER PACK (FUPP) CONTAINER, M1A1

11-2. The full-up power pack container, M1A1 is rigged for dual-point sling load using the following procedures:

- **Applicability.** The following item in Table 11-1 is certified for the helicopter(s) listed in the following table by the US Army Natick Soldier Center:

Table 11-1. Full-Up Power Pack Container, M1A1

Nomenclature	*Max Weight (Pounds)*	*Sling Set*	*Link Count Front/Rear*	*Type of Aircraft*
Full-Up Power Pack (FUPP) Container, M1A1, Metal or Fiberglass	13,620	25K	3/10	CH-47

Note. This container is only certified with the M1A1 FUPP and is NOT certified empty.

- **Materials.** The following materials are required to rig this load:
  - Sling set (25,000-pound capacity) with one additional apex fitting.
  - Tape, adhesive, pressure-sensitive, 2-inch wide roll.
  - Cord, nylon, Type III, 550-pound breaking strength.
  - Webbing, cotton, 1/4-inch, 80-pound breaking strength.
  - Strap, cargo, tiedown, CGU-1/B (as required).
- **Personnel.** Two persons can prepare and rig this load in 15 minutes.
- **Procedures.** The following procedures apply to this load:
  - **Preparation.** Prepare the load using the following steps:
    - Secure all equipment inside the container with tape, Type III nylon cord, or tiedown straps.
    - Ensure all container doors and vents are closed and secured with tape or Type III nylon cord.
  - **Rigging.** Rig the load according to the steps in Figure 11-1.

- **Hookup.** Two hookup teams stand on top of the container. The static discharge person discharges the static electricity. The forward hookup person (transmission end) places apex fitting 1 onto the forward cargo hook. The aft hookup person places apex fitting 2 onto the aft cargo hook. The hookup teams then carefully dismount the container and remain close to the load as the helicopter removes slack from the sling legs. When successful hookup is assured, the hookup teams quickly exit the area underneath the helicopter to the designated rendezvous point.
- **Derigging.** Derigging is the reverse of the preparation and rigging procedures.

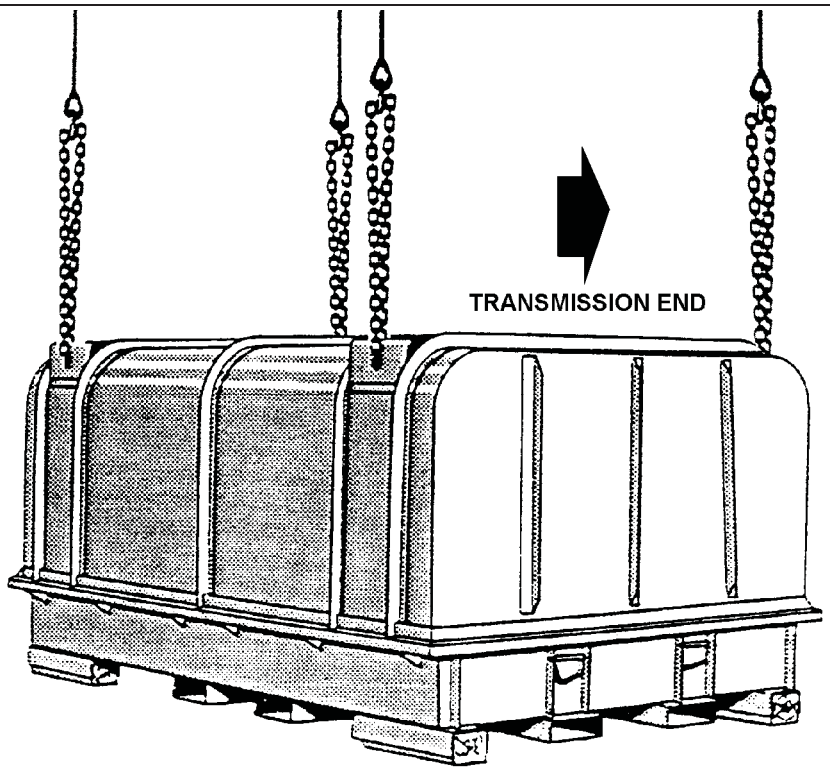

RIGGING STEPS

1. Place two sling legs on apex fitting number 1. Position apex fitting number 1 on top of the container (transmission end).

2. Loop the chain end of the left and right sling legs through their respective lift provisions located on the corners. Place the correct link from Table 11-1 in the grab hook.

3. Place two sling legs on apex fitting number 2. Position apex fitting number 2 on top of the container.

4. Loop the chain end of the left and right sling legs through their respective lift provisions located on the corners. Place the correct link from Table 11-1 in the grab hook. Secure the excess chain with tape or Type III nylon cord.

5. Raise the apex fittings above the shelter. Cluster and tie (breakaway technique) the sling legs in each sling set together to prevent entanglement during hookup and lift-off.

Figure 11-1. Full-Up Power Pack Container, M1A1

TANDEM LIFT OF TWO ISU-90 SHIPPING/STORAGE CONTAINERS

11-3. The tandem lift of two ISU-90 shipping/storage containers are rigged for dual-point sling load using the following procedures:

- **Applicability.** The following items in Table 11-2 are certified for the helicopter(s) listed in the following table by the US Army Natick Soldier Center:

Table 11-2. Tandem Lift of Two ISU-90 Shipping/Storage Containers

Nomenclature	*Max Weight (Pounds)*	*Sling Set*	*Link Count Front/Rear*	*Type of Aircraft*
Two (2) ISU-90 Shipping/Storage Containers, Tandem	7,500-Each 15,000-Total	25K	20/10	CH-47

WARNING

As the weight of the containers drop, the airspeed must also drop.

- **Materials.** The following materials are required to rig this load:
  - Sling set (25,000-pound capacity) (2 each).
  - Tape, adhesive, pressure-sensitive, 2-inch wide roll.
  - Cord, nylon, Type III, 550-pound breaking strength.
  - Webbing, cotton, 1/4-inch, 80-pound breaking strength.
  - Lumber, 4-inch x 6-inch x 72-inch (2 each).
  - Lumber, 1-inch x 3-inch x 24-inch (2 each).
  - Bolts, 1/2-inch x 6-inch (2 each).
  - Nuts, 1/2-inch (2 each).
  - Rope, 5/8-inch x 84-inch (2 each).
  - Strap, cargo, tie-down, CGU-1/B (as required).
- **Personnel.** Two persons can prepare and rig this load in 20 minutes.
- **Procedures.** The following procedures apply to this load:
  - **Preparation.** Prepare the load using the following steps:
    - Secure all cargo inside the container.
    - Secure all doors in the closed/locked position.
    - Construct the top wooden separator by bolting the two 1-inch x 3-inch x 24-inch pieces of lumber to a 4-inch x 6-inch x 72-inch piece of lumber. Space the 1-inch x 3-inch x 24-inch pieces of lumber so they will fit in the 45 degree slots on the top of the ISU-90. Drill two additional 3/4-inch holes through the 4-inch x 6-inch x 72-inch piece of lumber 18-inches in from each end. Route one end of a piece of 5/8-inch rope up through the 3/4-inch hole from bottom to top. Tie an overhand knot in the top running end. Route the running end of the second 5/8-inch rope up through the second 3/4-inch hole from bottom to top and tie an overhand knot in the top running end.
    - Construct the bottom wooden separator by drilling two 3/4-inch holes in the second 4-inch x 6-inch x 72-inch piece of lumber 18-inches in from each end. Route the other running end of the ropes through the holes in the bottom separator from top to bottom and tie an overhand knot in each bottom running end.

- Raise the top wooden separator up to the top of the ISU-90 and slide the unbolted end of the two 1-inch x 3-inch x 24-inch pieces of lumber into the 45 degree slots on the top of the ISU-90.
- Move the second container as close as possible to the first container, end to end. Designate the heaviest container as the forward container.
- Pass a CGU-1/B through each inboard forklift point of each ISU-90. Connect the two CGU-1/Bs together and tighten.
- Encircle the top of the two ISU-90s by connecting the CGU-1Bs together. Tighten the CGU-1Bs.

CAUTION

The containers should be as close as possible in weight. If the weight varies by 500 pounds or more, place the heavier container in the forward position. Ensure the weight inside the containers is evenly distributed.

- **Rigging.** Rig the load according to the steps in Figure 11-2.
- **Hookup.** Two hookup teams are used for this load. The static wand person discharges the static electricity with the static wand. The forward hookup person stands on top of the forward load and places apex fitting 1 onto the forward cargo hook. The aft hookup person stands on top of the rear load and places apex fitting 2 onto the aft cargo hook. The hookup team then carefully dismounts the load and remains close to the load as the helicopter removes slack from the sling legs. When successful hookup is assured, the hookup team quickly exits the area underneath the helicopter to the designated rendezvous point.
- **Derigging.** Derigging is the reverse of the preparation and rigging procedures.

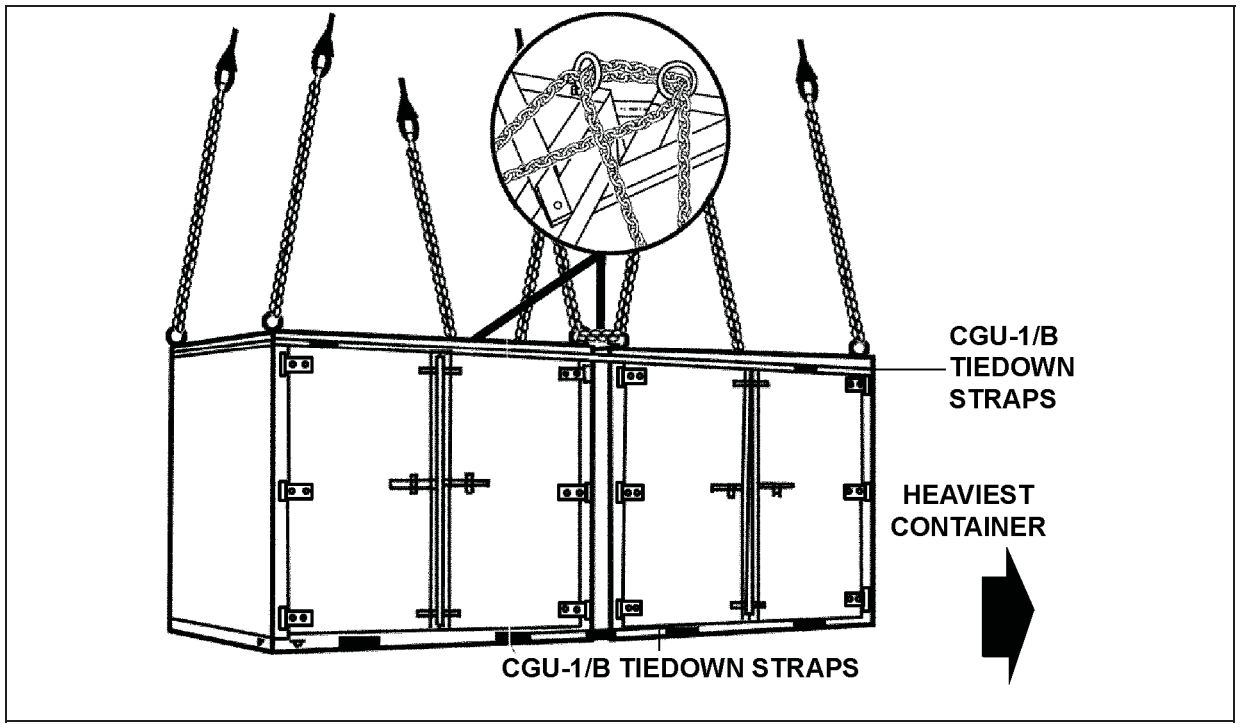

Figure 11-2. Two ISU-90 Shipping/Storage Containers

RIGGING STEPS
1. Position sling set one on top of the forward container. 2. Route outer sling legs 1 and 2 to the forward end of the forward container and inner legs 3 and 4 to the rear. Loop the chain end of sling legs 1 and 2 through their respective lift provisions located on the forward end of the container. Place the correct link from Table 11-2 in the grab hook. Loop the chain end of sling legs 3 and 4 through the lift provisions on the rear of the forward container and the front of the rear container. Place the correct link from Table 11-2 in the grab hook. 3. Position sling set two on top of the rear container. 4. Route outer sling legs 1 and 2 to the forward end of the rear container and inner legs 3 and 4 to the rear. Loop the chain end of sling legs 1 and 2 through the lift provisions on the front of the rear container and the rear of the front container. Place the correct link from Table 11-2 in the grab hook. Loop the chain end of sling legs 3 and 4 through their respective lift provisions located on the rear end of the rear container. Place the correct link from Table 11-2 in the grab hook. 5. Secure all excess chain with tape or Type III nylon cord. 6. Cluster and tie (breakaway technique) the sling legs in each sling set on top of the containers to prevent entanglement during hookup and lift-off.

Figure 11-2. Two ISU-90 Shipping/Storage Containers (Continued)

AUTHORIZED STOCKAGE LIST MOBILITY SYSTEM (ASLMS), 12-FOOT SECTION

11-4. The authorized stockage list mobility system, 12-foot section is rigged for dual-point sling load using the following procedures:

- **Applicability.** The following item in Table 11-3 is certified for the helicopter(s) listed in the following table by the US Army Natick Soldier Center:

Table 11-3. Authorized Stockage List Mobility System, 12-Foot Section

Nomenclature	*Max Weight (Pounds)*	*Sling Set*	*Link Count Front/Rear*	*Type of Aircraft*
Authorized Stockage List Mobility System FPU-12 (12-Foot Section Only)	20,000	25K 40K	3/3	CH-47 CH-53

- **Materials.** The following materials are required to rig this load:
  - Sling set (25,000-pound capacity) with one additional apex fitting.

    OR
  - Sling set (40,000-pound capacity) with one additional apex fitting.
  - Tape, adhesive, pressure-sensitive, 2-inch wide roll.
  - Cord, nylon, Type III, 550-pound breaking strength.
  - Webbing, cotton, 1/4-inch, 80-pound breaking strength.
- **Personnel.** Two persons can prepare and rig this load in 15 minutes.
- **Procedures.** The following procedures apply to this load:
  - **Preparation.** Prepare the load using the following steps:

- Secure all cargo inside the container.
- Secure all doors in the closed/locked position.

- **Rigging.** Rig the load according to the steps in Figure 11-3.
- **Hookup.** Two hookup teams are used for this load. The static wand person discharges the static electricity with the static wand. The forward hookup person stands on top of the forward load and places apex fitting 1 onto the forward cargo hook. The aft hookup person stands on top of the rear load and places apex fitting 2 onto the aft cargo hook. The hookup team then carefully dismounts the load and remains close to the load as the helicopter removes slack from the sling legs. When successful hookup is assured, the hookup team quickly exits the area underneath the helicopter to the designated rendezvous point.
- **Derigging.** Derigging is the reverse of the preparation and rigging procedures.

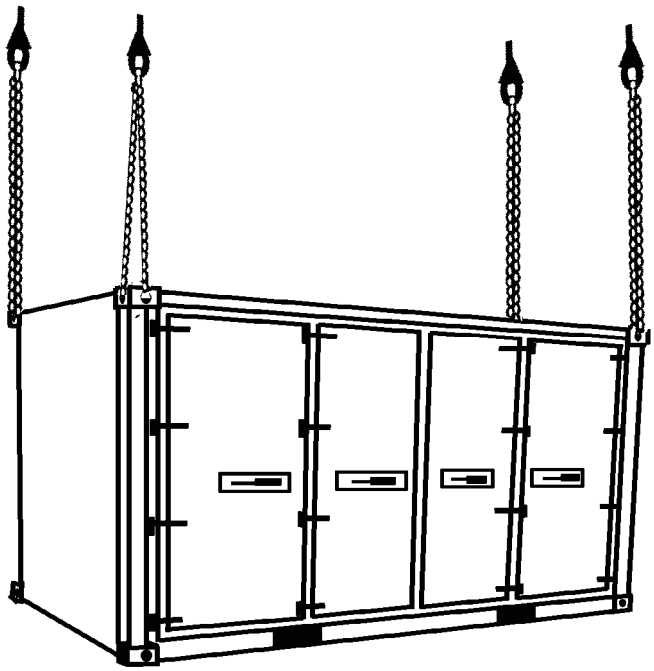

RIGGING STEPS

1. Place two sling legs on apex fitting number 1. Position apex fitting number 1 on top of the front of the load.

2. Loop the chain end of the left and right sling legs through their respective lift provisions located on the corners so the chain is routed through the opening in the side of the ISO and out through the front opening. Place the correct link from Table 11-3 in the grab hook.

3. Place two sling legs on apex fitting number 2. Position apex fitting number 2 on top of the container.

Figure 11-3. Authorized Stockage List Mobility Systems, 12-Foot Section

RIGGING STEPS (Continued)
4. Loop the chain end of the left and right sling legs through their respective lift provisions located on the corners so the chain is routed through the opening in the side of the ISO and out through the rear opening. Place the correct link from Table 11-3 in the grab hook. 5. Cluster and tie (breakaway technique) the sling legs in each sling set on top of the containers to prevent entanglement during hookup and lift-off.

Figure 11-3. Authorized Stockage List Mobility Systems, 12-Foot Section (Continued)

AUTHORIZED STOCKAGE LIST MOBILITY SYSTEM (ASLMS), 8- AND 12-FOOT SECTIONS CONNECTED

11-5. The authorized stockage list mobility system, 8- and 12-foot sections connected are rigged for dual-point sling load using the following procedures:

- **Applicability.** The following items in Table 11-4 are certified for the helicopter(s) listed in the following table by the US Army Natick Soldier Center:

Table 11-4. Authorized Stockage List Mobility System, 8- and 12-Foot Sections Connected

Nomenclature	*Max Weight (Pounds)*	*Sling Set*	*Link Count Front/Rear*	*Type of Aircraft*
Authorized Stockage List Mobility System FPU-8/12 (8- and 12-Foot Sections Connected)	25,000 26,000	25K 40K	3/3	CH-47 CH-53

- **Materials.** The following materials are required to rig this load:
  - Sling set (25,000-pound capacity) with one additional apex fitting.

    OR
  - Sling set (40,000-pound capacity) with one additional apex fitting.
  - Tape, adhesive, pressure-sensitive, 2-inch wide roll.
  - Cord, nylon, Type III, 550-pound breaking strength.
  - Webbing, cotton, 1/4-inch, 80-pound breaking strength.
- **Personnel.** Two persons can prepare and rig this load in 15 minutes.
- **Procedures.** The following procedures apply to this load:
  - **Preparation.** Prepare the load using the following steps:
    - Connect the ASLMS together using the manufacturer's approved rigid connecting link (Tandem Horizontal Connectors, part number 12900BA-1PZ).
    - Secure all cargo inside the container.
    - Secure all doors in the closed/locked position.
  - **Rigging.** Rig the load according to the steps in Figure 11-4.
  - **Hookup.** Two hookup teams are used for this load. The static wand person discharges the static electricity with the static wand. The forward hookup person stands on top of the forward load and places apex fitting 1 onto the forward cargo hook. The aft hookup person stands on top of the rear load and places apex fitting 2 onto the aft cargo hook. The hookup team then carefully dismounts the load and remains close to the load as the helicopter removes slack from the sling legs. When successful hookup is assured, the hookup team quickly exits the area underneath the helicopter to the designated rendezvous point.
  - **Derigging.** Derigging is the reverse of the preparation and rigging procedures.

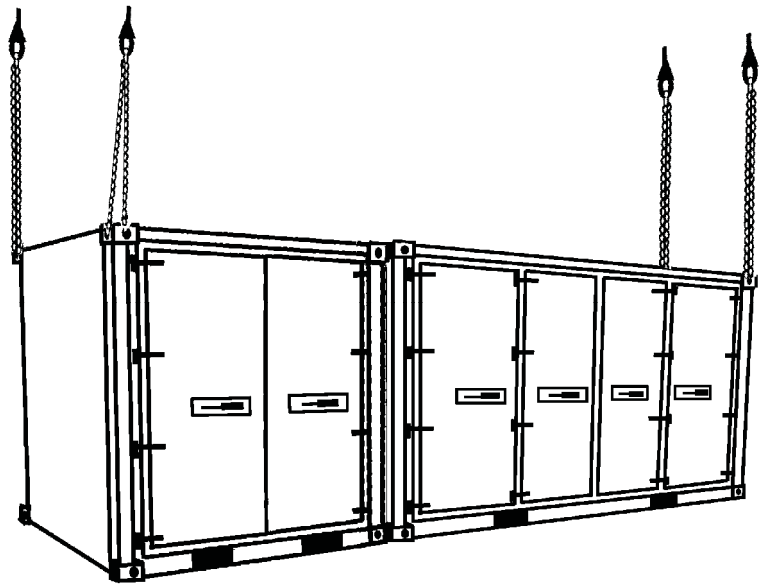

RIGGING STEPS

1. Place two sling legs on apex fitting number 1. Position apex fitting number 1 on top of the front of the load.

2. Loop the chain end of the left and right sling legs through their respective lift provisions located on the corners so the chain is routed through the opening in the side of the ISO and out through the front opening. Place the correct link from Table 11-4 in the grab hook.

3. Place two sling legs on apex fitting number 2. Position apex fitting number 2 on top of the container.

4. Loop the chain end of the left and right sling legs through their respective lift provisions located on the corners so the chain is routed through the opening in the side of the ISO and out through the rear opening. Place the correct link from Table 11-4 in the grab hook.

5. Cluster and tie (breakaway technique) the sling legs in each sling set on top of the containers to prevent entanglement during hookup and lift-off.

Figure 11-4. Authorized Stockage List Mobility Systems, 8- and 12-Foot Sections Connected

QUADCONS

11-6. The quadcons are rigged for dual-point sling load using the following procedures:

- **Applicability.** The following items in Table 11-5 are certified for the helicopter(s) listed in the following table by the US Army Natick Soldier Center:

Table 11-5. Quadcons

Nomenclature	*Max Weight (Pounds)*	*Sling Set*	*Link Count Front/Rear*	*Type of Aircraft*
Three Quadcons (3), Empty	5,292	10K	3/3	CH-47
Three Quadcons (3), Loaded	16,000	25K	5/5	CH-47
Four Quadcons (4), Empty	7,056	10K	3/3	CH-47
Four Quadcons (4), Loaded	16,000	25K	5/5	CH-47

WARNING

Weight is restricted to 7,000 pounds in each quadcon for sling load operations. Quadcons must be centrally loaded. Ensure quadcons are loaded to similar weights for multiple quadcon configurations. Off center loading or overloading may result in adverse flight conditions or damage to the load.

Note. Recommended airspeed will vary based on load configuration and the weight of the load inside the Quadcons.

- **Materials.** The following materials are required to rig this load:
  - Sling set (10,000- or 25,000-pound capacity) with one additional apex fitting.
  - Tape, adhesive, pressure-sensitive, 2-inch wide roll.
  - Cord, nylon, Type III, 550-pound breaking strength.
  - Webbing, cotton, 1/4-inch, 80-pound breaking strength.
- **Personnel.** Two persons can prepare and rig this load in 15 minutes.
- **Procedures.** The following procedures apply to this load:
  - **Preparation.** Prepare the load using the following steps:
    - Connect the Quadcons together using the manufacture's approved rigid connecting link (Part No. Sealock 1046). Lock all connecting links and wrap with tape.
    - Secure all cargo inside the container. Close and secure all doors in the locked position.
  - **Rigging.** Rig the load according to the steps in Figure 11-5.
  - **Hookup.** Two hookup teams stand on top of the container. The static discharge person discharges the static electricity. The forward hookup person places apex fitting 1 onto the forward cargo hook. The aft hookup person places apex fitting 2 onto the aft cargo hook. The hookup teams then carefully dismount the container and remain close to the load as the helicopter removes slack from the sling legs. When successful hookup is assured, the hookup teams quickly exit the area underneath the helicopter to the designated rendezvous point.
  - **Derigging.** Derigging is the reverse of the preparation and rigging procedures.

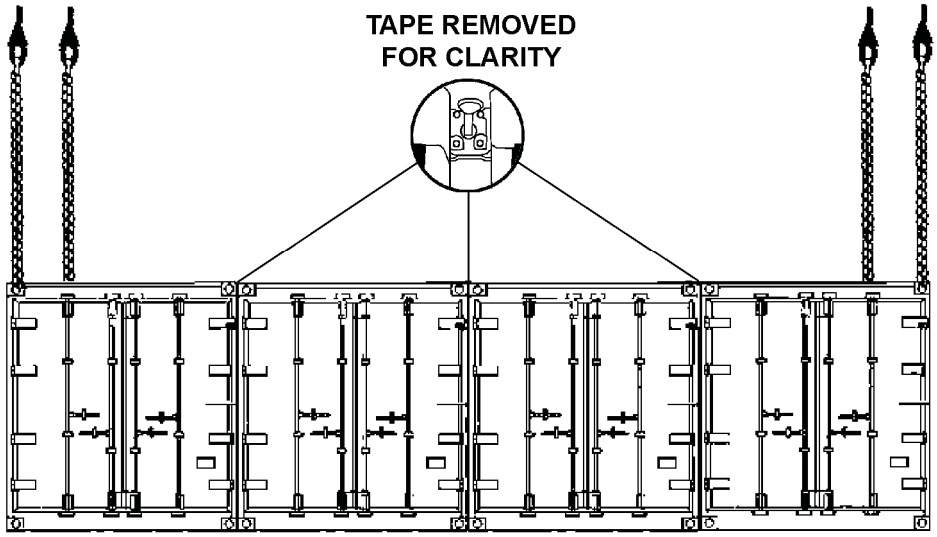

RIGGING STEPS

1. Connect 2 sling legs to apex fitting number 1. Position the apex fitting on top of the first connected container.

2. Loop the chain end of the sling legs through their respective lift provisions on the top front corner of the container. Place the correct link from Table 11-5 in the grab hook.

3. Connect 2 sling legs to apex fitting number 2. Position the apex fitting on top of the last connected container.

4. Loop the chain end of the sling legs through their respective lift provisions on the top rear corner of the container. Place the correct link from Table 11-5 in the grab hook.

5. Secure all excess chain with tape or Type III nylon cord.

6. Cluster and tie (breakaway technique) the sling legs in each sling set on top of the container to prevent entanglement during hookup and lift-off.

Figure 11-5. Quadcons

LAUNCH POD CONTAINER (LPC) WITH MULTIPLE LAUNCH ROCKET SYSTEM (MLRS) ROCKETS OR GUIDED MULTIPLE LAUNCH ROCKET SYSTEM (G-MLRS) ROCKETS / GUIDED MISSILE LAUNCH ASSEMBLY (GMLA)PODS WITH ARMY TACTICAL MISSILE SYSTEM (ATACMS) MISSILES, TWO CONTAINERS

11-7. The launch pod container with multiple launch rocket system rockets or guided multiple launch rocket system rockets / guided missile launch assembly with army tactical missile system missiles, two containers are rigged for dual-point sling load using the following procedures:

- **Applicability.** The following items in Table 11-6 are certified for the helicopter(s) listed in the following table by the US Army Natick Soldier Center:

Table 11-6. Launch Pod Container with Multiple Launch Rocket System Rockets or Guided Multiple Launch Rocket System Rockets / Guided Missile Launch Assembly Pods with Army Tactical Missile System Missiles, Two Containers

Nomenclature	*Max Weight (Pounds)*	*Sling Set*	*Link Count Front/Rear*	*Type of Aircraft*
Launch Pod Container with Multiple Launch Rocket System Rockets or Guided Multiple Launch Rocket System Rockets, (with Six Rockets)	10,190	25K	3/3	CH-47
Guided Missile Launch Assembly with Army Tactical Missile System Missiles	10,222	25K	3/3	CH-47

- **Materials.** The following materials are required to rig this load:
  - Sling set (25,000-pound capacity) with one additional apex fitting.
  - Tape, adhesive, pressure-sensitive, 2-inch wide roll.
  - Cord, nylon, Type III, 550-pound breaking strength.
  - Webbing, cotton, 1/4-inch, 80-pound breaking strength.
  - Strap, cargo, tiedown, CGU-1/B (as required).
  - Felt sheet, cattle hair, Type IV, 1/2-inch or suitable padding.
- **Personnel.** Two persons can prepare and rig this load in 30 minutes.
- **Procedures.** The following procedures apply to this load:
  - **Preparation.** Prepare the load using the following steps:
    - Prepare pods for travel in accordance with standard procedures.

CAUTION

Do not mix the MLRS and the GMLA in the same load.

    - Stack the pods one on top of the other ensuring both pods are facing the same direction.
    - Lash the stacks of pods together using the CGU-1/B tiedown straps. Two of the straps should run through both sets of lifting provisions on each end of the RP/Cs, to keep them aligned during flight. Evenly space the remaining two straps between the lifting provisions, running them around the pods. **DO NOT ROUTE THE STRAPS OVER THE ROCKET TUBES.** Pad all straps in the area where they contact the edges of the pods.
  - **Rigging.** Rig the load according to the steps in Figure 11-6.

Note. The firing end is considered to be the front of the load.

  - **Hookup.** Two hookup teams stand on top of the container. The static discharge person discharges the static electricity. The forward hookup person places apex fitting 1 onto the forward cargo hook. The aft hookup person places apex fitting 2 onto the aft cargo hook. The hookup teams then carefully dismount the container and remain close to the load as the helicopter removes slack from the sling legs. When successful hookup is assured, the hookup teams quickly exit the area underneath the helicopter to the designated rendezvous point.
  - **Derigging.** Derigging is the reverse of the preparation and rigging procedures.

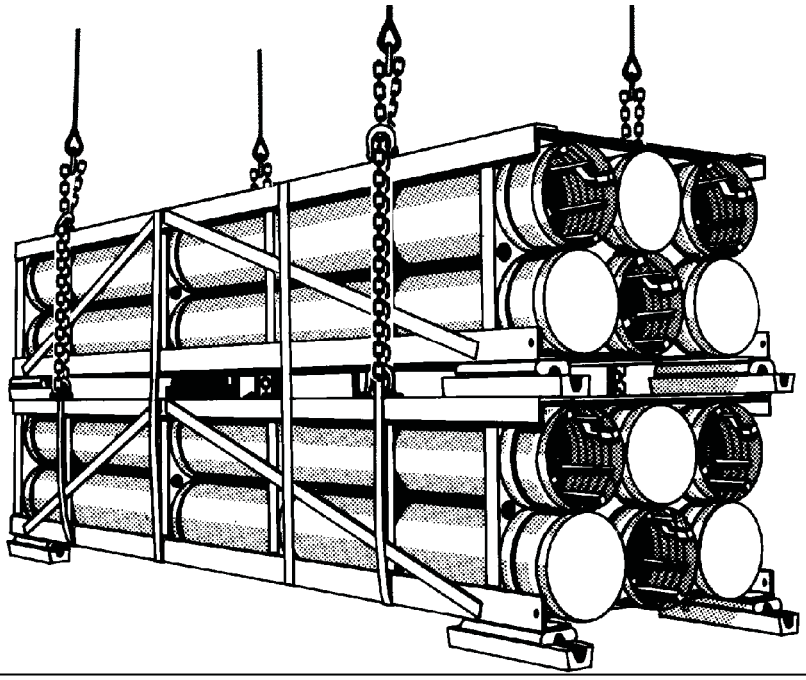

RIGGING STEPS

1. Place two sling legs on apex fitting number 1. Position apex fitting number 1 on top of the forward end of the pods.

2. Loop the chain end of the left and right sling legs through their respective top front lift provisions of the pod, through the front lifting provision on the bottom pod, and back through the front top lift provision on the top pod. Place the correct link from Table 11-5 in the grab hook.

3. Place two sling legs on apex fitting number 2. Position apex fitting number 1 on top of the aft end of the pods.

4. Loop the chain end of the left and right sling legs through their respective top rear lift provisions of the pod, through the rear lifting provision on the bottom pod, and back through the rear top lift provision on the top pod2. Place the correct link from Table 11-5 in the grab hook.

5. Raise the apex fittings above the shelter. Cluster and tie (breakaway technique) the sling legs in each sling set together to prevent entanglement during hookup and lift-off.

Figure 11-6. Launch Pod Container with Multiple Launch Rocket System Rockets or Guided Multiple Launch Rocket System Rockets / Guided Missile Launch Assembly Pods with Army Tactical Missile System Missiles, Two Containers

LAUNCH POD CONTAINER (LPC) WITH MULTIPLE LAUNCH ROCKET SYSTEM (MLRS) ROCKETS OR GUIDED MULTIPLE LAUNCH ROCKET SYSTEM (G-MLRS) ROCKETS / GUIDED MISSILE LAUNCH ASSEMBLY (GMLA)PODS WITH ARMY TACTICAL MISSILE SYSTEM (ATACMS) MISSILES, FOUR CONTAINERS

11-8. The launch pod container with multiple launch rocket system rockets or guided multiple launch rocket system rockets / guided missile launch assembly pods with army tactical missile system missiles, four containers are rigged for dual-point sling load using the following procedures:

- **Applicability.** The following items in Table 11-7 are certified for the helicopter(s) listed in the following table by the US Army Natick Soldier Center:

Table 11-7. Launch Pod Container with Multiple Launch Rocket System Rockets or Guided Multiple Launch Rocket System Rockets / Guided Missile Launch Assembly Pods with Army Tactical Missile System Missiles, Four Containers

Nomenclature	*Max Weight (Pounds)*	*Sling Set*	*Link Count Front/Rear*	*Type of Aircraft*
Launch Pod Container with Multiple Launch Rocket System Rockets or Guided Multiple Launch Rocket System Rockets	20,380	25K	3/14	CH-47
Guided Missile Launch Assembly Pods with Army Tactical Missile System Missiles	20,444	25K	3/14	CH47

- **Materials.** The following materials are required to rig this load:
  - Sling set (25,000-pound capacity) (2 each).
  - Tape, adhesive, pressure-sensitive, 2-inch wide roll.
  - Cord, nylon, Type III, 550-pound breaking strength.
  - Webbing, cotton, 1/4-inch, 80-pound breaking strength.
  - Strap, cargo, tiedown, CGU-1/B (16 each).
  - Lumber, 2 X 4 X 65-inches (4 each).
  - Nails, eightpenny (as required).
  - Felt sheet, cattle hair, Type IV, 1/2-inch or suitable padding.
  - Crane or forklift (15,000-pound capacity or larger).
- **Personnel.** Four persons can prepare and rig this load in 30 minutes.
- **Procedures.** The following procedures apply to this load:
  - **Preparation.** Prepare the load using the following steps:
    - Prepare the pods for sling loading in accordance with standard procedures.
    - Prepare two pieces of dunnage to protect the pods by nailing two pieces of 2 X 4 X 65-inch lumber together, wide side to wide side.
    - Make two stacks of pods. Use the crane or forklift to stack one stack of pods on top of the other with the projectiles facing the same direction. Label the stacks #1 and #2.

CAUTION

Do not mix the MLRS and the GMLA in the same load.

- Lash stack #1 together using four tiedown straps. Route a tiedown strap through both sets of lifting provisions on each end of the pods. Evenly space the remaining two tiedown straps between the lifting provisions, routing the straps around the pods. **DO NOT ROUTE THE STRAPS OVER THE ROCKET TUBES.** Pad the straps where they contact the edges of the EALP.
- Lash stack #2 using the above procedures for stack #1.
- Position the two pieces of dunnage near the lifting provisions on each end of the pods. Secure the dunnage to the pods with Type III nylon cord.
- Position stack #1 against stack #2 using the crane or forklift. Ensure the dunnage is between the loads.
- Lash the top two pods together on each end. Connect two tiedown straps together to form each lashing.
- Lash the bottom two pods together on each end. Connect two tiedown straps together to form each lashing.
- Pad the straps where they contact the edges of the pods.

▪ **Rigging.** Rig the load according to the steps in Figure 11-7.

Note. The firing end is considered the front of the load.

▪ **Hookup.** Two hookup teams stand on top of the container. The static discharge person discharges the static electricity. The forward hookup person places apex fitting 1 onto the forward cargo hook. The aft hookup person places apex fitting 2 onto the aft cargo hook. The hookup teams then carefully dismount the container and remain close to the load as the helicopter removes slack from the sling legs. When successful hookup is assured, the hookup teams quickly exit the area underneath the helicopter to the designated rendezvous point.

▪ **Derigging. Derigging is the reverse of the preparation and rigging procedures.**

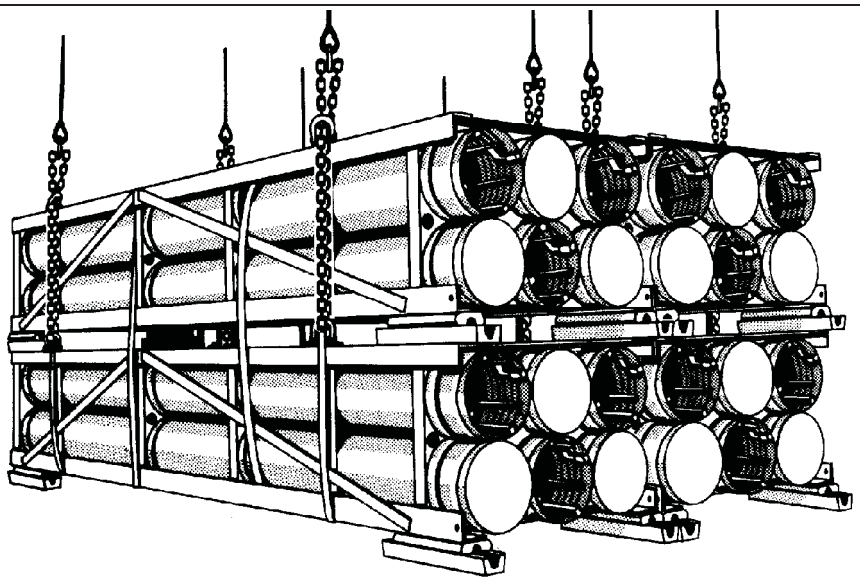

RIGGING STEPS

1. Position sling set number 1 on top of the forward end of the pods.

2. Loop the chain end of outer sling legs 1 and 2 through their respective top front lift provisions of the top pods, through the front lifting provision on the bottom pods, and back through the front top lift provision on the top pods. Place the correct link from Table 11-7 in the grab hook.

3. Loop the chain end of inner sling legs 3 and 4 through their respective top front lift provisions of the top, through the front lifting provision on the bottom pods, and back through the front top lift provision on the top pods. Place the correct link from Table 11-7 in the grab hook. Secure the excess chain with tape or Type III nylon cord.

4. Position sling set number 2 on top of the aft end of the pods.

5. Loop the chain end of outer sling legs 1 and 2 through their respective top rear lift provisions of the top pods, through the rear lifting provision on the bottom pods, and back through the rear top lift provision on the top pods. Place the correct link from Table 11-7 in the grab hook.

6. Loop the chain end of inner sling legs 3 and 4 through their respective top rear lift provisions of the top pods, through the rear lifting provision on the bottom pods, and back through the rear top lift provision on the top pods. Place the correct link from Table 11-7 in the grab hook. Secure the excess chain with tape or Type III nylon cord.

7. Raise the apex fittings above the container. Cluster and tie (breakaway technique) the sling legs in each sling set together to prevent entanglement during hookup and lift-off.

Figure 11-7. Launch Pod Container with Multiple Launch Rocket System Rockets or Guided Multiple Launch Rocket System Rockets / Guided Missile Launch Assembly Pods with Army Tactical Missile System Missiles, Four Containers

This page intentionally left blank.

Chapter 12

Certified Dual-Point Rigging Procedures for Radar and Satellite Equipment

INTRODUCTION

12-1. This chapter contains rigging procedures for dual-point lift of radar and satellite equipment that has been certified for sling load. Each rigging procedure is found in a paragraph that includes a description of the load, materials required for rigging, and steps to complete the procedure. An applicability paragraph is also a part of each paragraph and identifies the certified loads. The certified dual-point rigging procedures for radar and satellite equipment are in this section. Paragraphs 12-2 through 12-5 give detailed instructions for rigging loads.

Note. Reach Pendants may be used on dual point loads. Place a Reach Pendant on each apex fitting. A static discharge person is not required when using a Reach Pendant.

OE-361/G QUICK REACTION SATELLITE ANTENNA

12-2. The OE-361/G Quick Reaction Satellite Antenna is rigged for dual-point sling load using the following procedures:

- **Applicability.** The following item in Table 12-1 is certified for the helicopter(s) listed in the following table by the US Army Natick Soldier Center:

Table 12-1. OE-361/G Quick Reaction Satellite Antenna

Nomenclature	*Max Weight (Pounds)*	*Sling Set*	*Link Count Front/Rear*	*Type of Aircraft*
Antenna, Satellite, Quick Reaction, (QRSA), OE-361/G	4,830	10K	3/30	CH-47

- **Materials.** The following materials are required to rig this load:
  - Sling set (10,000-pound capacity) with one additional apex fitting.
  - Tape, adhesive, pressure-sensitive, 2-inch wide roll.
  - Cord, nylon, Type III, 550-pound breaking strength.
  - Webbing, cotton, 1/4-inch, 80-pound breaking strength.
  - Felt sheet, cattle hair, Type IV, 1/2-inch or suitable padding.
- **Personnel.** Four persons can prepare and rig this load in 30 minutes.
- **Procedures.** The following procedures apply to this load:
  - **Preparation.** Prepare the load using the following steps:
    - Install the spreader bar assembly that is stored on the load. Hook the spreader bar assembly cables to the lift rings and secure the keepers with tape.
    - Pad the spreader bar. Secure the padding with tape or cotton webbing.

- Pad the uppermost stacked antenna panel. Secure the padding with tape or cotton webbing.
- Secure the ladder, box covers, and any loose equipment with tape or Type III nylon cord.

- **Rigging.** Rig the load according to the steps in Figure 12-1.

Note: The ladder end is the front of the load.

- **Hookup.** Two hookup teams stand on top of the load between the stacked antenna panels and on either side of the center post. The static discharge person discharges the static electricity. The forward hookup person (ladder end) places apex fitting 1 onto the forward cargo hook. The aft hookup person places apex fitting 2 onto the aft cargo hook. The hookup teams then carefully dismount the container and remain close to the load as the helicopter removes slack from the sling legs. When successful hookup is assured, the hookup teams quickly exit the area underneath the helicopter to the designated rendezvous point.

CAUTION

Brief the helicopter crew to relax sling leg tension and to hover to the side of the load when releasing the apex fitting to prevent damaging the antenna.

- **Derigging.** Derigging is the reverse of the preparation and rigging procedures.

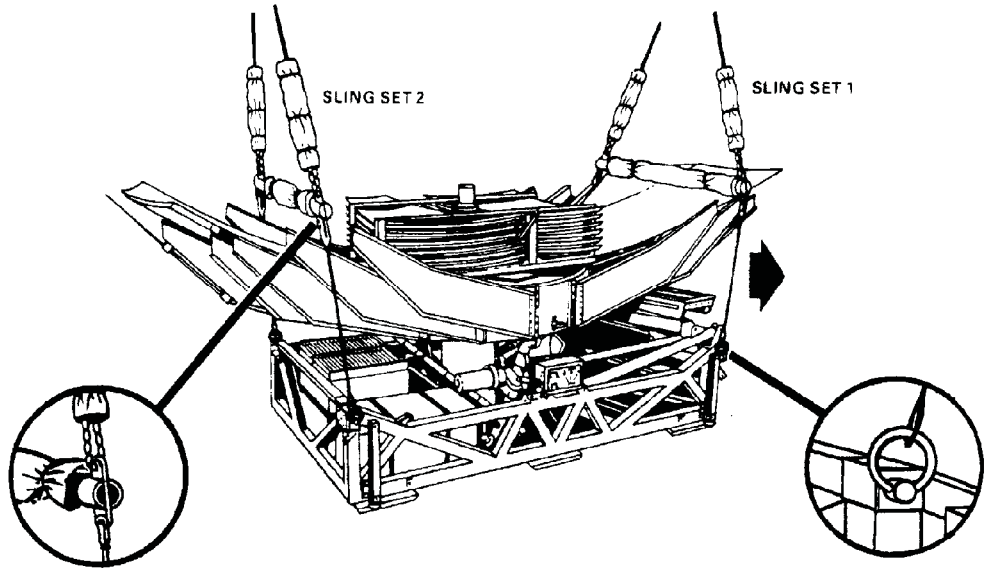

RIGGING STEPS

1. Place two sling legs on apex fitting number 1. Position apex fitting number 1 on top of the load (ladder end).

2. Loop the chain end of the left and right sling legs through their respective lift eyes located on the ends of the spreader bar. Place the correct link from Table 12-1 in the grab hook.

Figure 12-1. OE-361/G Quick Reaction Satellite Antenna

RIGGING STEPS (Continued)
3. Place two sling legs on apex fitting number 2. Position apex fitting number 2 on top of the aft end of the load. 4. Loop the chain end of the left and right sling legs through their respective lift eyes located on the ends of the spreader bar. Place the correct link from Table 12-1 in the grab hook. Secure the excess chain with tape or Type III nylon cord. 5. Pad each grab hook. Secure the padding with tape or cotton webbing. 6. Raise the apex fittings above the load. Cluster and tie (breakaway technique) the sling legs in each sling set together to prevent entanglement during hookup and lift-off.

Figure 12-1. OE-361/G Quick Reaction Satellite Antenna (Continued)

NATO AIR BASE SATCOM (NABS) POWER PALLET, AN/TSC-85B (V)2

12-3. The NATO air base SATCOM power pallet, AN/TSC-85B (V)2 is rigged for dual-point sling load using the following procedures:

- **Applicability.** The following item in Table 12-2 is certified for the helicopter(s) listed in the following table by the US Army Natick Soldier Center:

Table 12-2. NATO Air Base SATCOM Power Pallet, AN/TSC-85B (V)2

Nomenclature	*Max Weight (Pounds)*	*Sling Set*	*Link Count Front/Rear*	*Type of Aircraft*
NATO Air Base SATCOM Power Pallet, AN/TSC-85B (V)2	8,630	10K	3/3	CH-47

- **Materials.** The following materials are required to rig this load:
  - Sling set (10,000-pound capacity) with one additional apex fitting.
  - Tape, adhesive, pressure-sensitive, 2-inch wide roll.
  - Cord, nylon, Type III, 550-pound breaking strength.
  - Webbing, cotton, 1/4-inch, 80-pound breaking strength.
- **Personnel.** Two persons can prepare and rig this load in 20 minutes.
- **Procedures.** The following procedures apply to this load:
  - **Preparation.** Prepare the load using the following steps:
    - Secure all cargo inside the shelter or on the pallet with tape or Type III nylon cord.
    - Close and secure all access cover latches, vents, and doors. Tape all exhaust covers.
    - Remove the cargo cover and stow it in the prime mover. **DO NOT STOW THE COVER ON THE PALLET.**
  - **Rigging.** Rig the load according to the steps in Figure 12-2.

Note. The required individual equipment (RIE) case end of the pallet is designated as the forward end of the load.

  - **Hookup.** Two hookup teams are used for this load. The static wand person discharges the static electricity with the static wand. The forward hookup person stands on top of the generators and places apex fitting 1 onto the forward cargo hook. The aft hookup person

stands on top of the generators and places apex fitting 2 onto the aft cargo hook. The hookup team then carefully dismounts the load and remains close to the load as the helicopter removes slack from the sling legs. When successful hookup is assured, the hookup team quickly exits the area underneath the helicopter to the designated rendezvous point.

CAUTION

Brief the helicopter crew to relax sling leg tension and to hover to the side of the load when releasing the apex fitting to prevent damaging the antenna.

- **Derigging.** Derigging is the reverse of the preparation and rigging procedures.

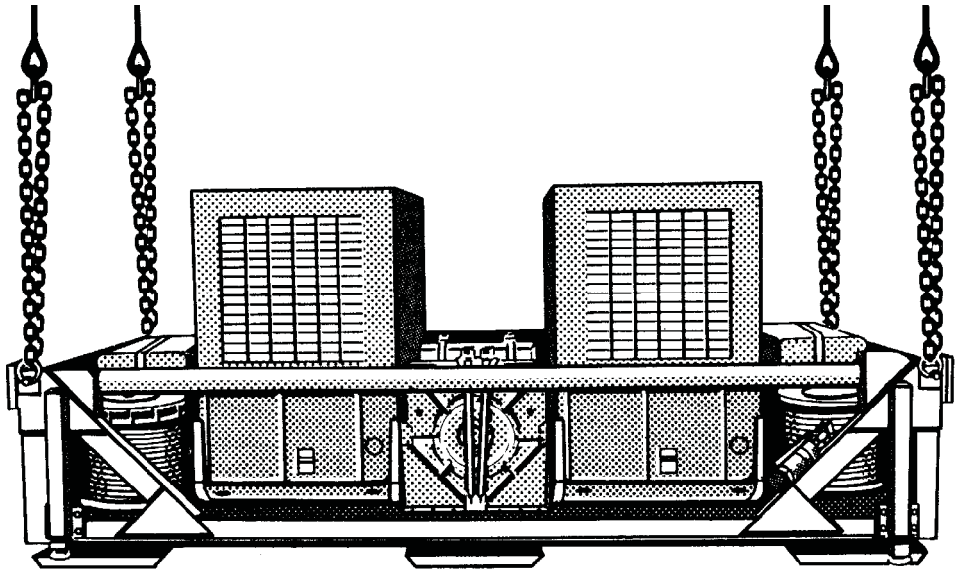

RIGGING STEPS

1. Place two sling legs on apex fitting number 1. Position apex fitting number 1 on top of the generator on the forward end.

2. Loop the chain end of the left and right sling legs through their respective lift provisions located on the corners of the pallet. Place the correct link from Table 12-2 in the grab hook.

3. Place two sling legs on apex fitting number 2. Position apex fitting number 2 on top of the generator on the aft end of the pallet.

4. Loop the chain end of the left and right sling legs through their respective lift provisions located on the corners of the pallet. Place the correct link from Table 12-2 in the grab hook.

Note: DO NOT use the lift provisions on the generators.

5. Raise the apex fittings above the load. Cluster and (breakaway technique) the sling legs in each sling set together to prevent entanglement during hookup and lift-off.

Figure 12-2. NATO Air Base SATCOM (NABS) Power Pallet, AN/TSC-85B (V)2

DIGITAL GROUP MULTIPLEXER (DGM) DIGITAL ANTENNA MAST PROGRAM (DAMP) PALLET TRAILER

12-4. The digital group multiplexer digital antenna mast program pallet trailer is rigged for dual-point sling load using the following procedures:

- **Applicability.** The following items in Table 12-3 are certified for the helicopter(s) listed in the following table by the US Army Natick Soldier Center:

Table 12-3. NATO Digital Group Multiplexer Digital Antenna Mast Program Pallet Trailer

Nomenclature	*Max Weight (Pounds)*	*Sling Set*	*Link Count Front/Rear*	*Type of Aircraft*
Digital Group Multiplexer Digital Antenna Mast Program Pallet Trailer, Two (2) Antenna Configuration	13,400	25K	13/3	CH-47
Digital Group Multiplexer Digital Antenna Mast Program Pallet Trailer, Three (3) Antenna Configuration	14,600	25K	13/3	CH-47

- **Materials.** The following materials are required to rig this load:
  - Sling set (25,000-pound capacity) with one additional apex fitting.
    - Additional chain length, part number 38850-00053-102, from a 25,000-pound capacity sling set (4 each).
    - Additional coupling link, part number 664241, from a 25,000-pound sling set (4 each).
  - Tape, adhesive, pressure-sensitive, 2-inch wide roll.
  - Cord, nylon, Type III, 550-pound breaking strength.
  - Webbing, cotton, 1/4-inch, 80-pound breaking strength.
  - Webbing, tubular, nylon, 1/2-inch, 1,000-pound breaking strength.
  - Felt sheet, cattle hair, Type IV, 1/2-inch or suitable padding.
- **Personnel.** Two persons can prepare and rig this load in 30 minutes.
- **Procedures.** The following procedures apply to this load:
  - **Preparation.** Prepare the load using the following steps:
    - Engage the trailer parking brakes.
    - Tape the rubber flaps on the generator to the frame.
    - Adjust the leveling jacks on the front of the trailer so the trailer is level.
    - Attach an additional chain length to each sling leg chain with a coupling link.
  - **Rigging.** Rig the load according to the steps in Figure 12-3.
  - **Hookup.** Two hookup teams stand on top of the trailer. The static discharge person discharges the static electricity. The forward hookup person places apex fitting 1 onto the forward cargo hook. The aft hookup person places apex fitting 2 onto the aft cargo hook. The hookup teams then carefully dismount the trailer and remain close to the load as the helicopter removes slack from the sling legs. When successful hookup is assured, the hookup teams quickly exit the area underneath the helicopter to the designated rendezvous point.
  - **Derigging.** Derigging is the reverse of the preparation and rigging procedures.

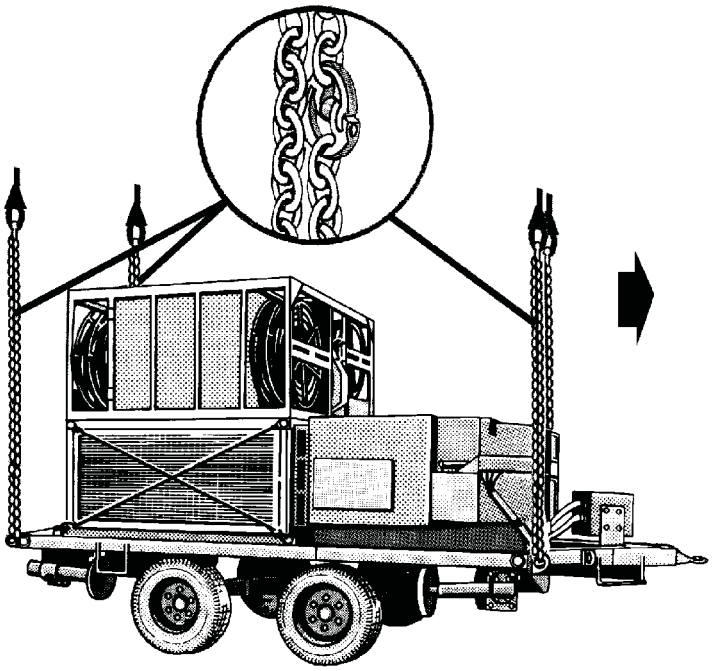

RIGGING STEPS

1. Place two sling legs on apex fitting number 1. Position apex fitting number 1 on top of the trailer.

2. Loop the chain end of the left and right sling legs through their respective front lift provisions located on the front corner of the trailer. Place the correct link from Table 12-3 in the grab hook. Secure the excess chain with tape or Type III nylon cord.

3. Place two sling legs on apex fitting number 2. Position apex fitting number 1 on top of the trailer.

4. Loop the chain end of the left and right sling legs through their respective rear lift provisions located on the rear corners of the trailer. Place the correct link from Table 12-3 in the grab hook.

5. Pad the chains and secure the padding with tape.

6. Raise the apex fittings above the trailer. Cluster and tie (breakaway technique) the sling legs in each sling set together to prevent entanglement during hookup and lift-off.

Figure 12-3. Digital Group Multiplexer, Digital Antenna Mast Program, Pallet Trailer

LIGHTWEIGHT GENERATOR FRAME ASSEMBLY (AN/TSC-93B RECONFIGURATION), SATELLITE COMMUNICATIONS TERMINAL

12-5. The lightweight generator frame assembly (AN/TSC-93B reconfiguration), satellite communications terminal is rigged for dual-point sling load using the following procedures:

- **Applicability.** The following items in Table 12-4 are certified for the helicopter(s) listed in the following table by the US Army Natick Soldier Center:

Table 12-4. Lightweight Generator Frame Assembly (AN/TSC-93B Reconfiguration), Satellite Communications Terminal

Nomenclature	*Max Weight (Pounds)*	*Sling Set*	*Link Count Front/Rear*	*Type of Aircraft*
AN/TSC-93B Satellite Communications Terminal without ALTA	3,644	10K	3/3	CH-47
AN/TSC-93B Satellite Communications Terminal with ALTA	3,957	10K	3/3	CH-47

- **Materials.** The following materials are required to rig this load:
  - Sling set (10,000-pound capacity) with one additional apex fitting.
  - Tape, adhesive, pressure-sensitive, 2-inch wide roll.
  - Cord, nylon, Type III, 550-pound breaking strength.
  - Webbing, cotton, 1/4-inch, 80-pound breaking strength.
  - Strap, cargo, tiedown, CGU-1/B (as required).
- **Personnel.** Three persons can prepare and rig this load in 10 minutes.
- **Procedures.** The following procedures apply to this load:
  - **Preparation.** Prepare the load using the following steps:
    - Secure all equipment with tiedown straps, Type III nylon cord, or tape.
    - Remove and stow the protective cover. Secure the cover with Type III nylon cord.
  - **Rigging.** Rig the load according to the steps in Figure 12-4.
  - **Hookup.** Two hookup teams stand on top of the frame. The static discharge person discharges the static electricity. The forward hookup person places apex fitting 1 onto the forward cargo hook. The aft hookup person places apex fitting 2 onto the aft cargo hook. The hookup teams then carefully dismount the load and remain close to the load as the helicopter removes slack from the sling legs. When successful hookup is assured, the hookup teams quickly exit the area underneath the helicopter to the designated rendezvous point.

CAUTION

Brief the helicopter crew to relax sling leg tension and to hover to the side of the load when releasing the apex fitting to prevent damaging the antenna.

  - **Derigging.** Derigging is the reverse of the preparation and rigging procedures.

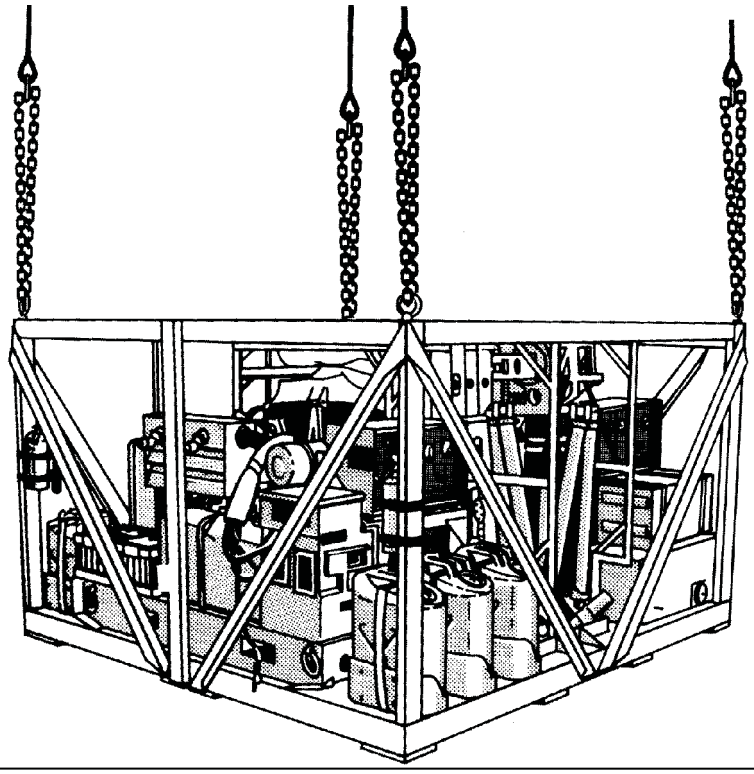

RIGGING STEPS

1. Place two sling legs on apex fitting number 1. Position apex fitting number 1 on top of the generator pallet.

2. Loop the chain end of the left and right sling legs through their respective front lift provisions located on the front corner of the pallet. Place the correct link from Table 12-4 in the grab hook.

3. Place two sling legs on apex fitting number 2. Position apex fitting number 1 on top of the generator pallet.

4. Loop the chain end of the left and right sling legs through their respective rear lift provisions located on the rear corners of the pallet. Place the correct link from Table 12-4 in the grab hook.

5. Raise the apex fittings above the load. Cluster and tie or tape (breakaway technique) the sling legs in each sling set together to prevent entanglement during hookup and lift-off.

Figure 12-4. Lightweight Generator Frame Assembly

Chapter 13

Certified Dual-Point Rigging Procedures for Miscellaneous Equipment

INTRODUCTION

13-1. This chapter contains rigging procedures for dual-point lift of miscellaneous equipment that has been certified for sling load. Each rigging procedure is found in a paragraph that includes a description of the load, materials required for rigging, and steps to complete the procedure. An applicability paragraph is also a part of each paragraph and identifies the certified loads. The certified dual-point rigging procedures for miscellaneous equipment are in this section. Paragraphs 13-2 through 13-13 give detailed instructions for rigging loads.

Note. Reach Pendants may be used on dual point loads. Place a Reach Pendant on each apex fitting. A static discharge person is not required when using a Reach Pendant.

PALLETIZED LOADING SYSTEM (PLS), M1077 FLATRACK, LOADED

13-2. The palletized loading system M1077 flatrack, loaded is rigged for dual-point sling load using the following procedures:

- **Applicability.** The following item in Table 13-1 is certified for the helicopter(s) listed in the following table by the US Army Natick Soldier Center:

Table 13-1. Palletized Loading System, M1077 Flatrack, Loaded

Nomenclature	*Max Weight (Pounds)*	*Sling Set*	*Link Count Front/Rear*	*Type of Aircraft*
Palletized Loading System, M1077 Flatrack, Loaded	Min-6,500 Max-20,000	10K 25K	3/10 5/10	CH-47

- **Materials.** The following materials are required to rig this load:
  - Sling set (10,000-pound capacity) with one additional apex fitting.

    OR
  - Sling set (25,000-pound capacity) with one additional apex fitting.
  - Tape, adhesive, pressure-sensitive, 2-inch wide roll.
  - Cord, nylon, Type III, 550-pound breaking strength.
  - Webbing, cotton, 1/4-inch, 80-pound breaking strength.
  - PLS operating manual.
  - Strap, cargo, tiedown, CGU-1/B (as required).
- **Personnel.** Two persons can prepare and rig this load in 20 minutes.
- **Procedures.** The following procedures apply to this load:
  - **Preparation.** Prepare the load using the following steps:

Note. During the following steps, observe all CAUTIONS and WARNINGS noted in the operating manual.

- Position the load on the Flatrack, distributing the weight as evenly as possible.
- Restrain the cargo with CGU-1/B cargo tiedown straps.

■ **Rigging.** Rig the load according to the steps in Figure 13-1.

Note. The A-frame end is considered the aft end of the load.

■ **Hookup.** Two hookup teams stand on top of the load. The static discharge person discharges the static electricity. The forward hookup person, (non-A-frame end), places apex fitting 1 onto the forward cargo hook. The aft hookup person places apex fitting 2 onto the aft cargo hook. The hookup teams then carefully dismount the pallet and remain close to the load as the helicopter removes slack from the sling legs. When successful hookup is assured, the hookup teams quickly exit the area underneath the helicopter to the designated rendezvous point.

■ **Derigging.** Derigging is the reverse of the preparation and rigging procedures.

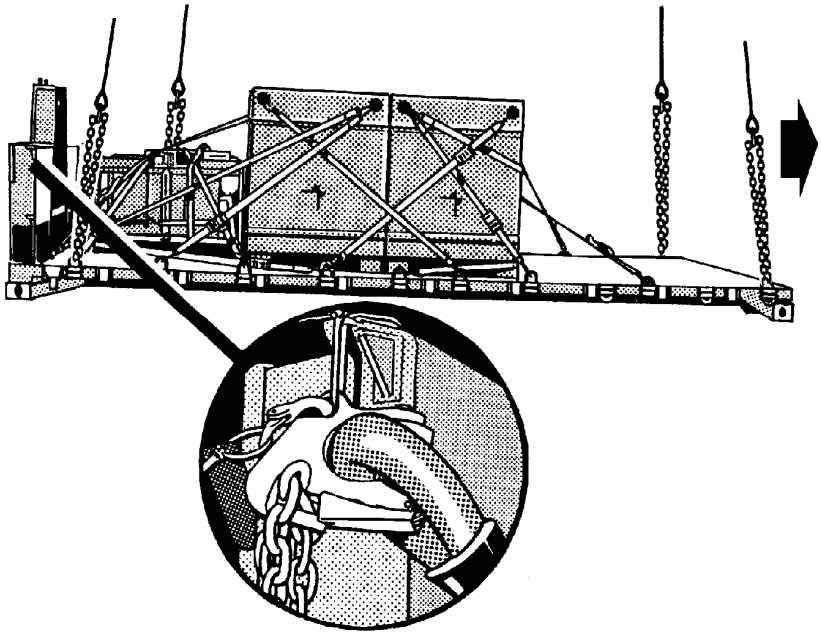

RIGGING STEPS

1. Place two sling legs on apex fitting number 1. Position apex fitting number 1 on top of the load (non A-frame end).
2. Loop the chain end of the left and right sling legs through their respective lift provision (tiedown ring closest to the end). Place the correct link from Table 13-1 in the grab hook.
3. Place two sling legs on apex fitting number 2. Position apex fitting number 2 on top of the load (A-frame end).

Figure 13-1. Palletized Loading System, M1077 Flatrack, Loaded

RIGGING STEPS (Continued)
4. Loop the chain end of the left and right sling legs through their respective lift provision (tiedown ring closest to the end). Place the correct link from Table 13-1 in the grab hook. Secure the excess chain with tape or Type III nylon cord. 5. Tie (breakaway technique) the rear grab hooks to the A-frame. 6. Raise the apex fittings above the load. Cluster and tie (breakaway technique) the sling legs in each sling set together to prevent entanglement during hookup and lift-off.

Figure 13-1. Palletized Loading System, M1077 Flatrack, Loaded (Continued)

PALLETIZED LOADING SYSTEM (PLS), M1077 FLATRACK, EMPTY

13-3. The palletized loading system M1077 flatrack, empty is rigged for dual-point sling load using the following procedures:

- **Applicability.** The following items in Table 13-2 are certified for the helicopter(s) listed in the following table by the US Army Natick Soldier Center:

Table 13-2. Palletized Loading System, M1077 Flatrack, Empty

Nomenclature	*Max Weight (Pounds)*	*Sling Set*	*Link Count Front/Rear*	*Type of Aircraft*
Two M1077 Flatracks, Empty, Stacked	6,500	10K	3/10	CH-47
Three M1077 Flatracks, Empty, Stacked	9,750	10K	3/10	CH-47

- **Materials.** The following materials are required to rig this load:
  - Sling set (10,000-pound capacity) with one additional apex fitting.
  - Tape, adhesive, pressure-sensitive, 2-inch wide roll.
  - Cord, nylon, Type III, 550-pound breaking strength.
  - Webbing, cotton, 1/4-inch, 80-pound breaking strength.
  - PLS operating manual.
- **Personnel.** Two persons can prepare and rig this load in 30 minutes.
- **Procedures.** The following procedures apply to this load:
  - **Preparation.** Prepare the load using the following steps:

Note. During the following steps, observe all CAUTIONS and WARNINGS noted in the operating manual.

    - Position the flatracks one on top of the other, if required, and engage the twist locks as described in the operating manual.
    - Safety tie the twist lock handles with Type III nylon cord to an adjacent cargo tiedown provision.
  - **Rigging.** Rig the load according to the steps in Figure 13-2.

Note. The A-frame end is considered the aft end of the load.

WARNING

Ensure the slings are attached to the bottom-most lift provisions for load securement and stability.

- **Hookup.** Two hookup teams stand on top of the load. The static discharge person discharges the static electricity. The forward hookup person (non-A-frame end) places apex fitting 1 onto the forward cargo hook. The aft hookup person places apex fitting 2 onto the aft cargo hook. The hookup teams then carefully dismount the pallet and remain close to the load as the helicopter removes slack from the sling legs. When successful hookup is assured, the hookup teams quickly exit the area underneath the helicopter to the designated rendezvous point.
- **Derigging.** Derigging is the reverse of the preparation and rigging procedures.

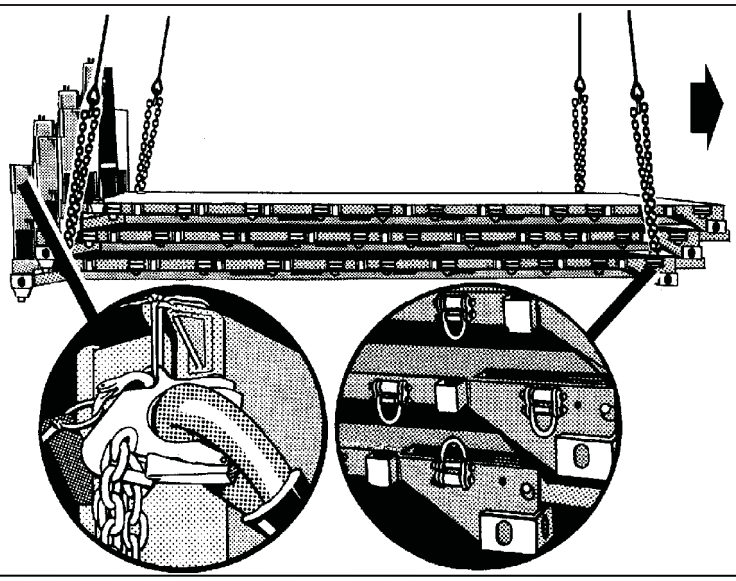

RIGGING STEPS

1. Place two sling legs on apex fitting number 1. Position apex fitting number 1 on top of the load (non A-frame end).
2. Loop the chain end of the left and right sling legs through their respective lift provision (tiedown ring closest to the end). Place the correct link from Table 13-2 in the grab hook.
3. Place two sling legs on apex fitting number 2. Position apex fitting number 2 on top of the load (A-frame end).
4. Loop the chain end of the left and right sling legs through their respective lift provision (tiedown ring closest to the end). Place the correct link from Table 13-2 in the grab hook. Secure the excess chain with tape or Type III nylon cord.
5. Tie (breakaway technique) the rear grab hooks to the A-frame.
6. Raise the apex fittings above the load. Cluster and tie or tape (breakaway technique) the sling legs in each sling set together to prevent entanglement during hookup and lift-off.

Figure 13-2. Palletized Loading System, M1077 Flatrack, Empty

ENHANCED PALLETIZED LOADING SYSTEM, FLATRACK, LOADED

13-4. The enhanced palletized loading system, flatrack, loaded is rigged for dual-point sling load using the following procedures:

- **Applicability.** The following item in Table 13-3 is certified for the helicopter(s) listed in the following table by the US Army Natick Soldier Center:

Table 13-3. Enhanced Palletized Loading System, Flatrack, Loaded

Nomenclature	*Max Weight (Pounds)*	*Sling Set*	*Link Count Front/Rear*	*Type of Aircraft*
Enhanced Palletized Loading System, Flatrack, Loaded	Min-10,500 Max-22,000	25K	3/20	CH-47

- **Materials.** The following materials are required to rig this load:
  - Sling set (25,000-pound capacity) with one additional apex fitting.
  - Tape, adhesive, pressure-sensitive, 2-inch wide roll.
  - Cord, nylon, Type III, 550-pound breaking strength.
  - Webbing, cotton, 1/4-inch, 80-pound breaking strength.
  - PLS operating manual.
  - Strap, cargo, tiedown, CGU-1/B (as required).
- **Personnel.** Two persons can prepare and rig this load in 30 minutes.
- **Procedures.** The following procedures apply to this load:
  - **Preparation.** Prepare the load using the following steps:

Note. During the following steps, observe all CAUTIONS and WARNINGS noted in the operating manual.

    - PLS personnel raise the end walls in accordance with TM 9-3990-206-14&P. The twist locks must be in the stowage position.
    - Position the load on the flatrack, distributing the weight as evenly as possible.
    - Restrain the cargo with CGU-1/B cargo tiedown straps.
  - **Rigging.** Rig the load according to the steps in Figure 13-3.

Note. The A-frame end is considered the aft end of the load.

- **Hookup.** Two hookup teams stand on top of the load. The static discharge person discharges the static electricity. The forward hookup person (non-A-frame end) places apex fitting 1 onto the forward cargo hook. The aft hookup person places apex fitting 2 onto the aft cargo hook. The hookup teams then carefully dismount the pallet and remain close to the load as the helicopter removes slack from the sling legs. When successful hookup is assured, the hookup teams quickly exit the area underneath the helicopter to the designated rendezvous point.
- **Derigging.** Derigging is the reverse of the preparation and rigging procedures.

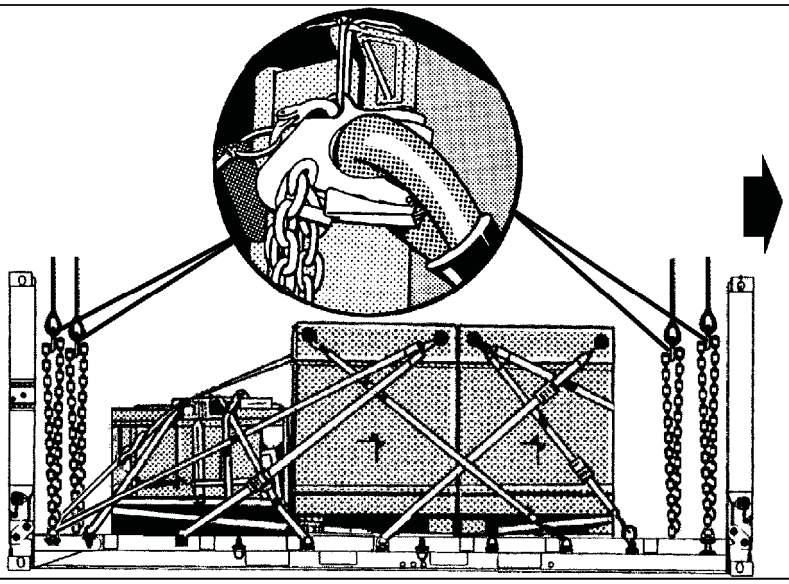

RIGGING STEPS

1. Place two sling legs on apex fitting number 1. Position apex fitting number 1 on top of the load (end wall end).

2. Loop the chain end of the left and right sling legs through their respective lift provision (tiedown ring closest to the end wall). Place the correct link from Table 13-3 in the grab hook.

3. Place two sling legs on apex fitting number 2. Position apex fitting number 2 on top of the load (A-frame end).

4. Loop the chain end of the left and right sling legs through their respective lift provision (tiedown ring closest to the A-frame end). Place the correct link from Table 13-3 in the grab hook. Secure the excess chain with tape or Type III nylon cord.

5. Tie (breakaway technique) the grab hooks to the end walls.

6. Raise the apex fittings above the load. Cluster and tie (breakaway technique) the sling legs in each sling set together to prevent entanglement during hookup and lift-off.

Figure 13-3. Enhanced Palletized Loading System, Flatrack, Loaded

ENHANCED PALLETIZED LOADING SYSTEM, FLATRACK, EMPTY

13-5. The enhanced palletized loading system, flatrack, empty is rigged for dual-point sling load using the following procedures:

- **Applicability.** The following item in Table 13-4 is certified for the helicopter(s) listed in the following table by the US Army Natick Soldier Center:

Table 13-4. Enhanced Palletized Loading System, Flatrack, Empty

Nomenclature	*Max Weight (Pounds)*	*Sling Set*	*Link Count Front/Rear*	*Type of Aircraft*
One Enhanced, Flatrack, Empty	7,400	25K	3/20	CH-47
Two Enhanced, Flatracks, Empty, Stacked	14,800	25K	3/20	CH-47

- **Materials.** The following materials are required to rig this load:
  - Sling set (25,000-pound capacity) with one additional apex fitting.
  - Tape, adhesive, pressure-sensitive, 2-inch wide roll.
  - Cord, nylon, Type III, 550-pound breaking strength.
  - Webbing, cotton, 1/4-inch, 80-pound breaking strength.
  - PLS operating manual.
  - Strap, cargo, tiedown, CGU-1/B (4 each).
- **Personnel.** Two persons can prepare and rig this load in 20 minutes.
- **Procedures.** The following procedures apply to this load:
  - **Preparation.** Prepare the load using the following steps:

Note. During the following steps, observe all CAUTIONS and WARNINGS noted in the operating manual.

    - PLS personnel should lower both end walls on all enhanced flatracks in accordance with the operating manual.
    - Position the flatracks one on top of the other, if required, and engage the twist locks as described in the operating manual.
    - Attach a tiedown strap on the fourth tiedown ring on the bottom flatrack. Route the strap over the end wall on the top flatrack and secure the strap to the fourth tiedown ring on the other side of the bottom flatrack. Tighten the strap and secure the excess with tape. Repeat this procedure using the third set of tiedown rings.
    - Repeat the above procedure on the other end of the flatrack.
  - **Rigging.** Rig the load according to the steps in Figure 13-4.
  - **Hookup.** Two hookup teams stand on top of the load. The static discharge person discharges the static electricity. The forward hookup person places apex fitting 1 onto the forward cargo hook. The aft hookup person places apex fitting 2 onto the aft cargo hook. The hookup teams then carefully dismount the pallet and remain close to the load as the helicopter removes slack from the sling legs. When successful hookup is assured, the hookup teams quickly exit the area underneath the helicopter to the designated rendezvous point.
  - **Derigging.** Derigging is the reverse of the preparation and rigging procedures.

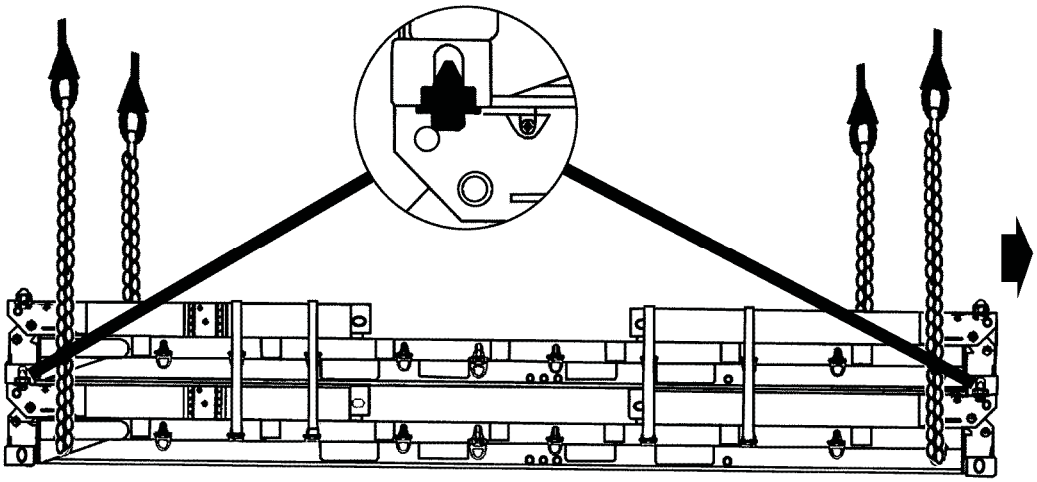

RIGGING STEPS

1. Place two sling legs on apex fitting number 1. Position apex fitting number 1 on top of the load.
2. Loop the chain end of the left and right sling legs through their respective lift provision on the bottom pallet (tiedown ring closest to the end). Place the correct link from Table 13-4 in the grab hook.
3. Place two sling legs on apex fitting number 2. Position apex fitting number 2 on top of the load.
4. Loop the chain end of the left and right sling legs through their respective lift provision on the bottom pallet (tiedown ring closest to the end). Place the correct link from Table 13-4 in the grab hook. Secure the excess chain with tape or Type III nylon cord.
5. Tie (breakaway technique) the rear grab hooks to the A-frame.
6. Raise the apex fittings above the load. Cluster and tie (breakaway technique) the sling legs in each sling set together to prevent entanglement during hookup and lift-off.

Figure 13-4. Enhanced Palletized Loading System, Flatrack, Empty

CONTAINER ROLL-IN/OUT PLATFORM (CROP), LOADED

13-6. The container roll-in/out platform, loaded is rigged for dual-point sling load using the following procedures:

- **Applicability.** The following item in Table 13-5 is certified for the helicopter(s) listed in the following table by the US Army Natick Soldier Center:

Table 13-5. Container Roll-In/Out Platform, Loaded

Nomenclature	*Max Weight (Pounds)*	*Sling Set*	*Link Count Front/Rear*	*Type of Aircraft*
Container Roll-In/Out Platform, Loaded	Min-6,500 Max-20,000	25K	3/25	CH-47

- **Materials.** The following materials are required to rig this load:
  - Sling set (25,000-pound capacity) with one additional apex fitting.
  - Tape, adhesive, pressure-sensitive, 2-inch wide roll.
  - Cord, nylon, Type III, 550-pound breaking strength.
  - Webbing, cotton, 1/4-inch, 80-pound breaking strength.
  - Padding, felt or suitable substitute (as required).
  - Strap, cargo, tiedown, 15,000-pound capacity (supplied with platform) or CGU-1/B (as required).
- **Personnel.** Two persons can prepare and rig this load in 10 minutes.
- **Procedures.** The following procedures apply to this load:
  - **Preparation.** Prepare the load using the following steps:
    - Remove the load restraints from the stowed position and install on the platform.
    - Secure the load on the platform with tiedown straps. Secure the running end of the straps with tape or Type I 1/4-inch cotton webbing.
  - **Rigging.** Rig the load according to the steps in Figure 13-5.

Note. The A-Frame is the rear of the platform.

- **Hookup.** Two hookup teams stand on top of the load. The static discharge person discharges the static electricity. The forward hookup person places apex fitting 1 onto the forward cargo hook. The aft hookup person places apex fitting 2 onto the aft cargo hook. The hookup teams then carefully dismount the pallet and remain close to the load as the helicopter removes slack from the sling legs. When successful hookup is assured, the hookup teams quickly exit the area underneath the helicopter to the designated rendezvous point.
- **Derigging.** Derigging is the reverse of the preparation and rigging procedures.

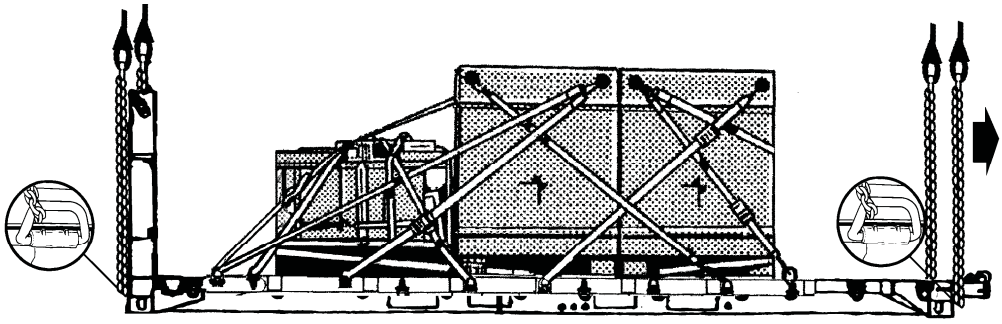

RIGGING STEPS

1. Place two sling legs on apex fitting number 1. Position apex fitting number 1 on the front of the platform

2. Loop the chain end of the sling legs through their respective front lift provisions on the bottom platform. Place the correct link from Table 13-5 in the grab hook. Secure the excess chain with tape or Type III nylon cord.

3. Place two sling legs on apex fitting number 2. Position apex fitting number 2 on the rear (A-Frame end) of the platform.

Figure 13-5. Container Roll-In/Out Platform, Loaded

RIGGING STEPS (Continued)
4. Loop the chain end of the sling legs through their respective rear lift provisions on the bottom platform. Place the correct link from Table 13-5 in the grab hook. Secure the excess chain with tape or Type III nylon cord. 5. Raise the apex fittings above the load. Cluster and tie (breakaway technique) the sling legs in each sling set together to prevent entanglement during hookup and lift-off.

Figure 13-5. Container Roll-In/Out Platform, Loaded (Continued)

CONTAINER ROLL-IN/OUT PLATFORM (CROP), EMPTY, STACKED

13-7. The container roll-in/out platform, empty, stacked is rigged for dual-point sling load using the following procedures:

- **Applicability.** The following item in Table 13-6 is certified for the helicopter(s) listed in the following table by the US Army Natick Soldier Center:

Table 13-6. Container Roll-In/Out Platform, Empty, Stacked

Nomenclature	*Max Weight (Pounds)*	*Sling Set*	*Link Count Front/Rear*	*Type of Aircraft*
Two Through Five Container Roll-In/Out Platform, Empty, Stacked	Min-7,300 Max-20,000	25K	3/25	CH-47

- **Materials.** The following materials are required to rig this load:
  - Sling set (25,000-pound capacity) with one additional apex fitting.
  - Tape, adhesive, pressure-sensitive, 2-inch wide roll.
  - Cord, nylon, Type III, 550-pound breaking strength.
  - Webbing, cotton, 1/4-inch, 80-pound breaking strength.
  - Padding, felt or suitable substitute (as required).
  - Strap, cargo, tiedown, 15,000-pound capacity (supplied with platform) (2 per stacked platform).
- **Personnel.** Two persons can prepare and rig this load in 10 minutes.
- **Procedures.** The following procedures apply to this load:
  - **Preparation.** Prepare the load using the following steps:
    - Ensure the load restraints are in the stowed position.
    - Secure the A-frames in the down position.
    - Stack the platforms with the A-frames at the same end and secure the platforms together with the straps provided with the platform (a minimum of two straps per platform are required). Ensure the straps have operational keepers on the hook ends. Secure the loose strap ends with tape or 1/4-inch cotton webbing.
  - **Rigging.** Rig the load according to the steps in Figure 13-6.
  - **Hookup.** Two hookup teams stand on top of the load. The static discharge person discharges the static electricity. The forward hookup person places apex fitting 1 onto the forward cargo hook. The aft hookup person places apex fitting 2 onto the aft cargo hook. The hookup teams then carefully dismount the pallet and remain close to the load as the helicopter removes slack from the sling legs. When successful hookup is assured, the hookup teams quickly exit the area underneath the helicopter to the designated rendezvous point.
  - **Derigging.** Derigging is the reverse of the preparation and rigging procedures.

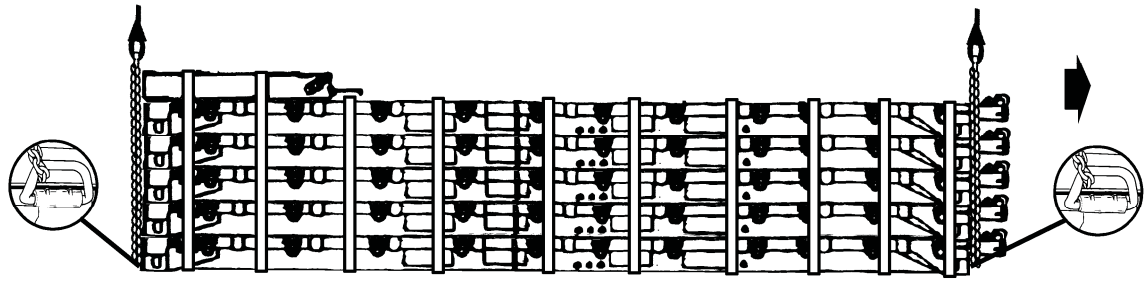

RIGGING STEPS

1. Place two sling legs on apex fitting number 1. Position apex fitting number 1 on the front of the platform

2. Loop the chain end of the sling legs through their respective front lift provisions on the bottom platform. Place the correct link from Table 13-6 in the grab hook. Secure the excess chain with tape or Type III nylon cord.

3. Place two sling legs on apex fitting number 2. Position apex fitting number 2 on the rear (A-Frame end) of the platform.

4. Loop the chain end of the sling legs through their respective rear lift provisions on the bottom platform. Place the correct link from Table 13-6 in the grab hook. Secure the excess chain with tape or Type III nylon cord.

5. Raise the apex fittings above the load. Cluster and tie (breakaway technique) the sling legs in each sling set together to prevent entanglement during hookup and lift-off.

Figure 13-6. Container Roll-In/Out Platform, Empty, Stacked

NAVAL SPECIAL WARFARE RIGID INFLATABLE BOAT (NSWRIB) WITH OR WITHOUT TRAILER

13-8. The naval special warfare rigid inflatable boat with or without trailer is rigged for dual-point sling load using the following procedures:

- **Applicability.** The following item in Table 13-7 is certified for the helicopter(s) listed in the following table by the US Army Natick Soldier Center:

Table 13-7. Naval Special Warfare Rigid Inflatable Boat with or without Trailer

Nomenclature	*Max Weight (Pounds)*	*Sling Set*	*Link Count Front/Rear*	*Type of Aircraft*
Naval Special Warfare Rigid Inflatable Boat without Trailer	15,070 18,230	25K 40K	7/61 3/45	CH-47 CH-53
Naval Special Warfare Rigid Inflatable Boat with Trailer	19,240 22,400	25K 40K	7/61 3/45	CH-47 CH-53

- **Materials.** The following materials are required to rig this load:
  - Sling set (25,000-pound capacity) with one additional apex fitting.

    OR
  - Sling set (40,000-pound capacity) with one additional apex fitting.
  - Tape, adhesive, pressure-sensitive, 2-inch wide roll.

- Cord, nylon, Type III, 550-pound breaking strength.
- Webbing, cotton, 1/4-inch, 80-pound breaking strength.

- **Personnel.** Two persons can prepare and rig this load in 10 minutes.
- **Procedures.** The following procedures apply to this load:
  - **Preparation.** Prepare the load using the following steps:

Note. These loads may be flown with the sponsons inflated or deflated.

  - Rotate the aft seat rack forward and secure it to the aft engine hand rail with Type III nylon cord.
  - Secure the aft engine hand rail, lids, doors, and caps with tape or Type III nylon cord.

Note. When sling loading the NSWRIB off the trailer, ensure all the straps as well as the hard point connection that connects the boat to the trailer are disconnected.

Note. When sling loading the NSWRIB with trailer add the following procedures.

  - Ensure the NSWRIB is properly secured to the trailer with the straps provided with the trailer.
  - There are five connection points on the boat (two on each side and one in the front) and nine connection points on the trailer (four on each side and one in the front).
  - The straps provided with the trailer should be 12,000-pound nylon webbing with 10,000-pound hooks on each end. An 11,000-pound load binder should also be used with the strap.
  - Secure safety chains, intervehicular electrical cables, and brake cables on top of the drawbar tape or Type III nylon cord.
  - Lower the lunette close to the ground and secure it in place with a 5,000-pound tiedown strap and load binder.
  - Engage the parking brake and secure it in the engaged position.
  - **Rigging.** Rig the load according to the steps in Figure 13-7.

Note. This load is flown with the bow of the boat in front.

  - **Hookup.** Two hookup teams stand on deck of the boat. The static discharge person discharges the static electricity. The forward hookup person places apex fitting 1 onto the forward cargo hook. The aft hookup person places apex fitting 2 onto the aft cargo hook. The hookup teams then carefully dismount the boat and remain close to the load as the helicopter removes slack from the sling legs. When successful hookup is assured, the hookup teams quickly exit the area underneath the helicopter to the designated rendezvous point.
  - **Derigging.** Derigging is the reverse of the preparation and rigging procedures.

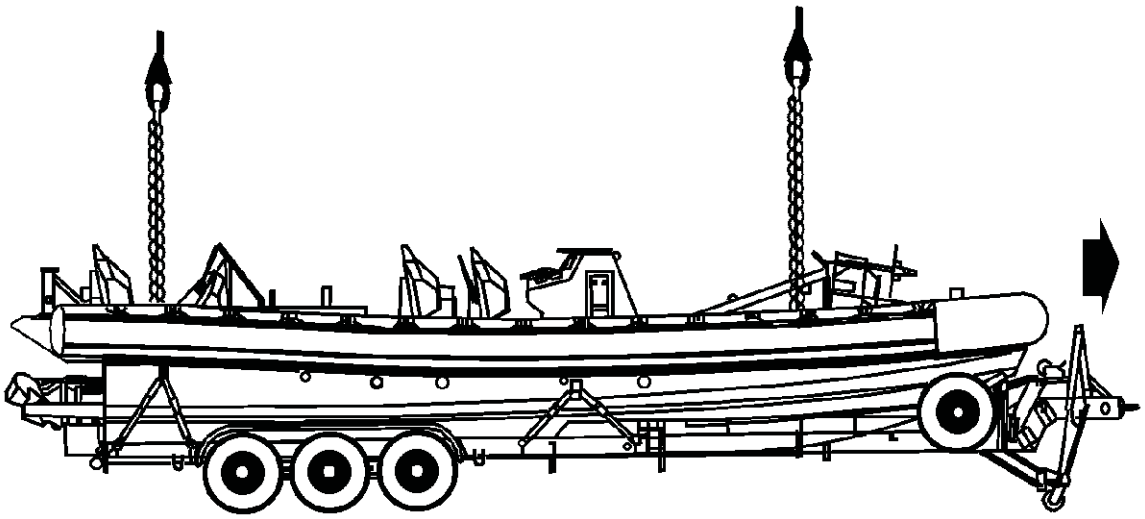

RIGGING STEPS

1. Place two sling legs on apex fitting number 1. Position apex fitting number 1 on the bow of the boat.

2. Loop the chain end of the left and right sling legs through their respective lift provisions on the front of the deck. Place the correct link from Table 13-7 in the grab hook. Secure the excess chain with tape or Type III nylon cord.

3. Place two sling legs on apex fitting number 2. Position apex fitting number 2 on the deck at the stern of the boat.

4. Loop the chain end of the left and right sling legs through their respective lift provision on the stern of the boat. Place the correct link from Table 13-7 in the grab hook. Secure the excess chain with tape or Type III nylon cord.

5. Raise the apex fittings above the load. Cluster and tie (breakaway technique) the sling legs in each sling set together to prevent entanglement during hookup and lift-off.

Figure 13-7. Naval Special Warfare Rigid Boat with or without Trailer

SPECIAL OPERATIONS CRAFT-RIVERINE (SOC-R) AND NAVAL SPECIAL WARFARE RIGID INFLATABLE BOAT (NSWRIB) TRAILER

13-9. The special operations craft-riverine and naval special warfare rigid inflatable boat trailer are rigged for dual-point sling load using the following procedures:

- **Applicability.** The following items in Table 13-8 are certified for the helicopter(s) listed in the following table by the US Army Natick Soldier Center:

Table 13-8. Special Operations Craft-Riverine and Naval Special Warfare Rigid Inflatable Boat Trailer

Nomenclature	*Max Weight (Pounds)*	*Sling Set*	*Link Count Front/Rear*	*Type of Aircraft*
Naval Special Warfare Rigid Inflatable Boat Trailer	3,716	15K	5/20	CH-53
Special Operations Craft-Riverine Trailer	4,300	15K	5/20	CH-53

- **Materials.** The following materials are required to rig this load:
  - Sling set (15,000-pound capacity) with one additional web ring.
  - Tape, adhesive, pressure-sensitive, 2-inch wide roll.
  - Cord, nylon, Type III, 550-pound breaking strength.
  - Webbing, cotton, 1/4-inch, 80-pound breaking strength.
- **Personnel.** Two persons can prepare and rig this load in 10 minutes.
- **Procedures.** The following procedures apply to this load:
  - **Preparation.** Prepare the load using the following steps:
    - Secure the utility box lid with Type III nylon cord.
    - Lower the lunette close to the ground and secure it in place with a 5,000-pound tiedown strap and load binder.
    - Secure safety chains, intervehicular electrical cables, and brake cables on top of the drawbar tape or Type III nylon cord.
    - Engage the parking brake and secure it in the engaged position.
    - Tape the rails on the trailer together to ensure the slings do not become entangled.
    - Tape all lights.
  - **Rigging.** Rig the load according to the steps in Figure 13-8.

Note. This load is flown with the lunette in front.

  - **Hookup.** Two hookup teams stand next to the trailer. The static discharge person discharges the static electricity. The forward hookup person places apex fitting 1 onto the forward cargo hook. The aft hookup person places apex fitting 2 onto the aft cargo hook. The hookup teams then carefully dismount the trailer and remain close to the load as the helicopter removes slack from the sling legs. When successful hookup is assured, the hookup teams quickly exit the area underneath the helicopter to the designated rendezvous point.
  - **Derigging.** Derigging is the reverse of the preparation and rigging procedures.

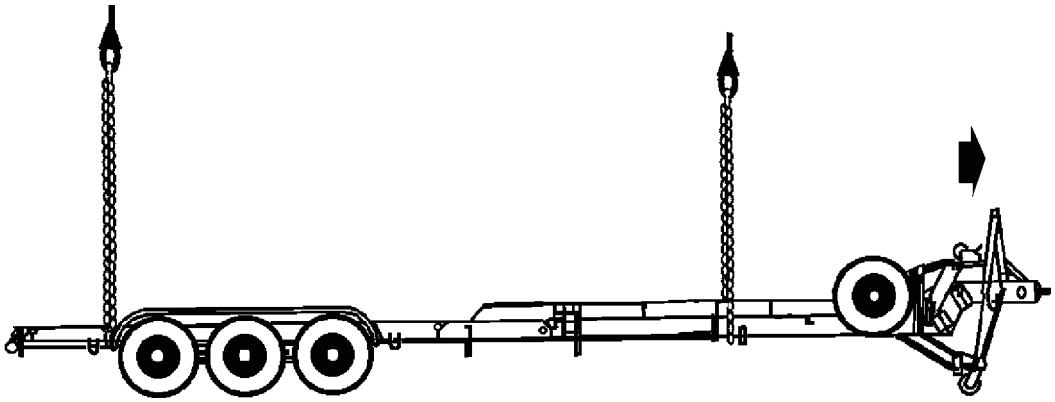

RIGGING STEPS

1. Place two sling legs on apex fitting number 1. Position apex fitting number 1 on the front of the trailer.

2. Loop the chain end of sling leg 1 around the main support frame in front of the tiedown provision on the left side of the trailer. Place the correct link from Table 13-8 in the grab hook. Repeat this step with sling leg 2 on the right side of the trailer.

3. Place two sling legs on apex fitting number 2. Position apex fitting number 2 on the rear of the trailer.

4. Loop the chain end of the left and right sling legs around the frame and through their respective lift provision on the rear of the trailer. Place the correct link from Table 13-8 in the grab hook. Secure the excess chain with tape or Type III nylon cord.

5. Raise the apex fittings above the load. Cluster and tie (breakaway technique) the sling legs in each sling set together to prevent entanglement during hookup and lift-off.

Figure 13-8. Special Operations Craft-Riverine and Naval Special Warfare Rigid Inflatable Boat Trailer

SPECIAL OPERATIONS CRAFT-RIVERINE (SOC-R)

13-10. The special operations craft is rigged for dual-point sling load using the following procedures:

- **Applicability.** The following item in Table 13-9 is certified for the helicopter(s) listed in the following table by the US Army Natick Soldier Center:

Table 13-9. Special Operations Craft-Riverine

Nomenclature	*Max Weight (Pounds)*	*Sling Set*	*Link Count Front/Rear*	*Type of Aircraft*
Special Operations Craft-Riverine	20,400	25K 40K	7/36 3/22	CH-47 CH-53

- **Materials.** The following materials are required to rig this load:
  - Sling set (25,000- or 40,000-pound capacity) with one additional apex fitting.
  - Tape, adhesive, pressure-sensitive, 2-inch wide roll.
  - Cord, nylon, Type III, 550-pound breaking strength.
  - Webbing, cotton, 1/4-inch, 80-pound breaking strength.

- **Personnel.** Two persons can prepare and rig this load in 10 minutes.
- **Procedures.** The following procedures apply to this load:
  - **Preparation.** Prepare the load using the following steps:
    - Rotate the communications module to the deck and secure for travel.
    - Secure all lids, doors, and caps with tape or Type III nylon cord.
    - Secure all control knobs, control gauges, and lights with tape.
  - **Rigging.** Rig the load according to the steps in Figure 13-9.

Notes. 1. This load is flown with the bow of the boat forward.
2. When lifting the SOC-R off the trailer ensure all tiedown straps and hard points are disconnected

---

- **Hookup.** Two hookup teams stand on the deck of the boat. The static discharge person discharges the static electricity. The forward hookup person places apex fitting 1 onto the forward cargo hook. The aft hookup person places apex fitting 2 onto the aft cargo hook. The hookup teams then carefully dismount the boat and remain close to the load as the helicopter removes slack from the sling legs. When successful hookup is assured, the hookup teams quickly exit the area underneath the helicopter to the designated rendezvous point.
- **Derigging.** Derigging is the reverse of the preparation and rigging procedures

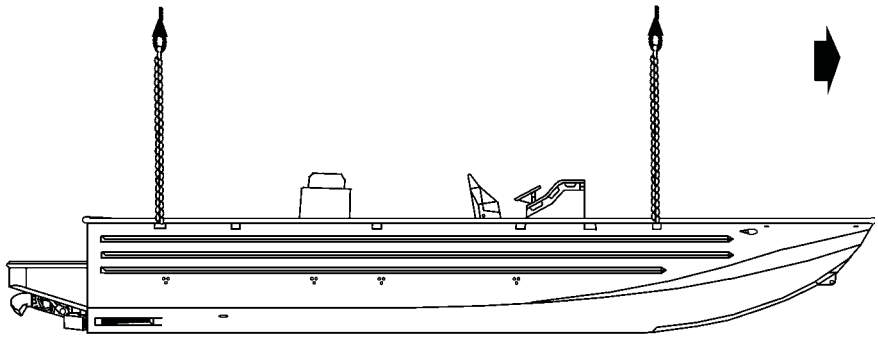

RIGGING STEPS

1. Place two sling legs on apex fitting number 1. Position apex fitting number 1 on the bow deck.

2. Loop the chain end of the sling legs through their respective front lift provisions. Place the correct link from Table 13-9 in the grab hook. Secure the excess chain with tape or Type III nylon cord.

3. Place two sling legs on apex fitting number 2. Position apex fitting number 2 on the stern deck.

4. Loop the chain end of the sling legs through their respective rear lift provisions. Place the correct link from Table 13-9 in the grab hook. Secure the excess chain with tape or Type III nylon cord.

5. Raise the apex fittings above the load. Cluster and tie or tape (breakaway technique) the sling legs in each sling set together to prevent entanglement during hookup and lift-off.

Figure 13-9. Special Operations Craft-Riverine

SPECIAL OPERATIONS CRAFT-RIVERINE (SOC-R) WITH SOC-R TRAILER

13-11. The special operations craft with SOC-R trailer is rigged for dual-point sling load using the following procedures:

- **Applicability.** The following item in Table 13-10 is certified for the helicopter(s) listed in the following table by the US Army Natick Soldier Center:

Table 13-10. Special Operations Craft-Riverine with SOC-R Trailer

Nomenclature	*Max Weight (Pounds)*	*Sling Set*	*Link Count Front/Rear*	*Type of Aircraft*
Special Operations Craft-Riverine with SOC-R Trailer	24,000	25K 40K	7/36 3/27	CH-47 CH-53

- **Materials.** The following materials are required to rig this load:
  - Sling set (25,000- or 40,000-pound capacity) with one additional apex fitting.
  - Tape, adhesive, pressure-sensitive, 2-inch wide roll.
  - Cord, nylon, Type III, 550-pound breaking strength.
  - Webbing, cotton, 1/4-inch, 80-pound breaking strength.
  - 5,000-pound capacity cargo strap with load binder (as required).
  - 12,000-pound capacity nylon tiedown straps and 11,000-pound capacity load binders (provided with the boat) (4 each).
  - Felt sheet, cattle hair, Type IV, 1/2-inch or suitable padding.
- **Personnel.** Two persons can prepare and rig this load in 10 minutes.
- **Procedures.** The following procedures apply to this load:
  - **Preparation.** Prepare the load using the following steps:
    - Secure the boat to the trailer starting from the bow using the following steps:
    - Route the first 12,000-pound capacity tiedown strap around the boat and trailer just aft of the gun mounts and secure with an 11,000-pound capacity load binder.
    - Route the second 12,000-pound capacity tiedown strap around the boat and trailer in-between the control console and the driver's seat and secure with an 11,000-pound capacity load binder.
    - Route the third 12,000-pound capacity tiedown strap around the boat and trailer just aft of the driver's seat, through the tiedown provisions on the trailer and secure with an 11,000-pound capacity load binder.
    - Route the fourth 12,000-pound capacity tiedown strap around the boat and trailer just aft of the antenna mounts, through the tiedown provisions on the trailer and secure with an 11,000-pound capacity load binder.
    - Pad all the tiedown straps where the straps contact the bottom of the hull.
    - Rotate the communications module to the deck and secure for travel.
    - Secure all lids, doors, and caps with tape or Type III nylon cord.
    - Secure all control knobs, control gauges, and lights with tape.
    - Cover the water jets with tape.
    - Lower the lunette close to the ground and secure it in place with a 5,000-pound tiedown strap and load binder.
    - Secure safety chains, intervehicular electrical cables, and brake cables on top of the drawbar tape or Type III nylon cord.
    - Engage the parking brake and secure it in the engaged position.
    - Tape all lights.
  - **Rigging.** Rig the load according to the steps in Figure 13-10.

Note. This load is flown with the bow of the boat forward.

- **Hookup.** Two hookup teams stand on the deck of the boat. The static discharge person discharges the static electricity. The forward hookup person places apex fitting 1 onto the forward cargo hook. The aft hookup person places apex fitting 2 onto the aft cargo hook. The hookup teams then carefully dismount the boat and remain close to the load as the helicopter removes slack from the sling legs. When successful hookup is assured, the hookup teams quickly exit the area underneath the helicopter to the designated rendezvous point.
- **Derigging**. Derigging is the reverse of the preparation and rigging procedures.

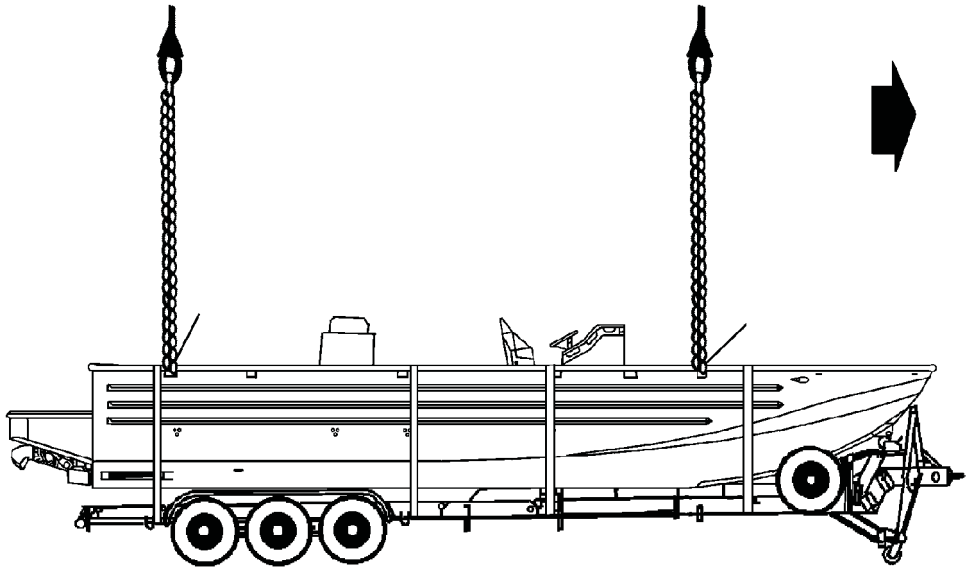

RIGGING STEPS

1. Place two sling legs on apex fitting number 1. Position apex fitting number 1 on the bow deck.
2. Loop the chain end of the sling legs through their respective front lift provisions. Place the correct link from Table 13-10 in the grab hook. Secure the excess chain with tape or Type III nylon cord.
3. Place two sling legs on apex fitting number 2. Position apex fitting number 2 on the stern deck.
4. Loop the chain end of the sling legs through their respective rear lift provisions. Place the correct link from Table 13-10 in the grab hook. Secure the excess chain with tape or Type III nylon cord.
5. Raise the apex fittings above the load. Cluster and tie or tape (breakaway technique) the sling legs in each sling set together to prevent entanglement during hookup and lift-off.

Figure 13-10. Special Operations Craft-Riverine (SOC-R) with SOC-R Trailer

35-FOOT RIVERINE ASSAULT CRAFT (RAC) WITH OR WITHOUT TRAILER

13-12. The 35-foot riverine assault craft with or without trailer is rigged for dual-point sling load using the following procedures:

- **Applicability.** The following items in Table 13-11 are certified for the helicopter(s) listed in the following table by the US Army Natick Soldier Center:

Table 13-11. 35-Foot Riverine Assault Craft with or without Trailer

Nomenclature	*Max Weight (Pounds)*	*Sling Set*	*Link Count Front/Rear*	*Type of Aircraft*
35-Foot Riverine Assault Craft without Trailer	13,800	40K	3/10	CH-53
35-Foot Riverine Assault Craft with Trailer	15,800	40K	3/10	CH-53

- **Materials.** The following materials are required to rig this load:
  - Sling set (40,000-pound capacity) with one additional apex fitting.
  - Tape, adhesive, pressure-sensitive, 2-inch wide roll.
  - Cord, nylon, Type III, 550-pound breaking strength.
  - Webbing, cotton, 1/4-inch, 80-pound breaking strength.
  - Strap, cargo, tiedown (10,000-pound capacity) (4 each).
- **Personnel.** Four persons can prepare and rig this load in 15 minutes.
- **Procedures.** The following procedures apply to this load:
  - **Preparation.** Prepare the load using the following steps:
    - Place dunnage under the tongue of the trailer and retract the landing gear leg.
    - Ensure the trailer is secured to the hull with the three attaching straps and the forward (bow) chain. Pad the RAC where the straps make contact.
    - Engage the parking brake or chock the wheels.
    - Stack and secure any extra equipment at the lowest point in the RAC with tiedown straps or Type III nylon cord.
    - Secure the weapons and install sight covers on the dial sights with tape or Type III nylon cord.
    - Secure hatch cover, firing platforms, unused lines and equipment with tape or Type III nylon cord.
    - **Rigging.** Rig the load according to the steps in Figure 13-11.
  - **Hookup.** Two hookup teams are required for this load. The static discharge person discharges the static electricity. The forward hookup person stands on the forward deck and places apex fitting 1 onto the forward cargo hook. The aft hookup person stands on the aft transom deck and places apex fitting 2 onto the aft cargo hook. The hookup teams then carefully dismount the load and remain close to the load as the helicopter removes slack from the sling legs. When successful hookup is assured, the hookup teams quickly exit the area underneath the helicopter to the designated rendezvous point.
  - **Derigging.** Derigging is the reverse of the preparation and rigging procedures.

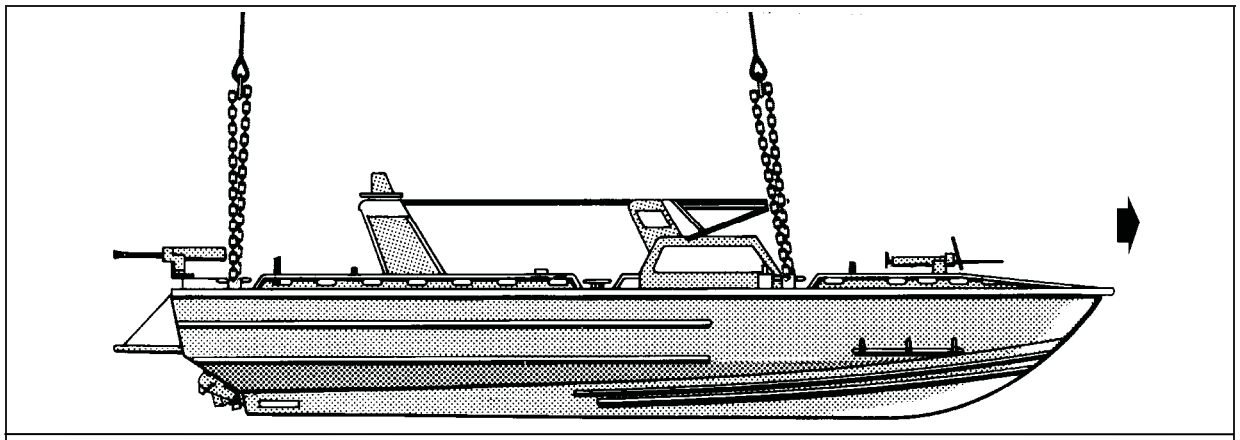

RIGGING STEPS

1. Place two sling legs on apex fitting number 1. Position sling set number 1 on top of the bow hatch.

2. Loop the chain end of the left and right sling legs through their respective lift provisions. Place the correct link from Table 13-11 in the grab hook.

3. Place two sling legs on apex fitting number 2. Position sling set number 2 on top of the canvas cover.

4. Loop the chain end of the left and right sling legs through their respective lift provisions. Place the correct link from Table 13-11 in the grab hook. Secure the excess chain with tape or Type III nylon cord.

5. Raise the apex fittings above the load. Cluster and tie (breakaway technique) the sling legs in each sling set together to prevent entanglement during hookup and lift-off.

Figure 13-11. 35-Foot Riverine Assault Craft with or without Trailer

SMALL UNIT RIVERINE CRAFT (SURC) WITH TRAILER

13-13. The small unit riverine Craft with trailer is rigged for dual-point sling load using the following procedures:

- **Applicability.** The following item in Table 13-12 is certified for the helicopter(s) listed in the following table by the US Army Natick Soldier Center:

Table 13-12. Small Unit Riverine Craft with Trailer

Nomenclature	*Max Weight (Pounds)*	*Sling Set*	*Link Count Front/Rear*	*Type of Aircraft*
Small Unit Riverine Craft with Trailer	20,400	40K	3/25	CH-53

- **Materials.** The following materials are required to rig this load:
  - Sling set (40,000-pound capacity) with one additional apex fitting.
    - Chain length, part number 607050, from a 40,000-pound capacity sling set (4 each).
    - Coupling link, part number 577-0815, from a 40,000-pound sling set (4 each).
  - Tape, adhesive, pressure-sensitive, 2-inch wide roll.

  - Cord, nylon, Type III, 550-pound breaking strength.
  - Webbing, cotton, 1/4-inch, 80-pound breaking strength.
  - Strap, cargo, tiedown (5,000-pound capacity) (5 each).
- **Personnel.** Four persons can prepare and rig this load in 15 minutes.
- **Procedures.** The following procedures apply to this load:
  - **Preparation.** Prepare the load using the following steps:
    - Secure dunnage under the tongue of the trailer and retract the landing gear leg.
    - Ensure the trailer is secured to the hull with the tiedown straps and the forward (bow) chain.
    - Engage the parking brake or chock the wheels.
    - Secure hatch cover, firing platforms, unused lines, lids, caps and equipment with tape or Type III nylon cord.
    - Rotate the communications module to the deck and secure for travel.
    - Secure and protect all control knobs, control gauges, and lights with tape.
    - Secure any loose cables to the tongue with tape or Type III nylon cord.
    - **Rigging.** Rig the load according to the steps in Figure 13-12.
  - **Hookup.** Two hookup teams are required for this load. The static discharge person discharges the static electricity. The forward hookup person stands on the forward deck and places apex fitting 1 onto the forward cargo hook. The aft hookup person stands on the aft transom deck and places apex fitting 2 onto the aft cargo hook. The hookup teams then carefully dismount the load and remain close to the load as the helicopter removes slack from the sling legs. When successful hookup is assured, the hookup teams quickly exit the area underneath the helicopter to the designated rendezvous point.
  - **Derigging.** Derigging is the reverse of the preparation and rigging procedures.

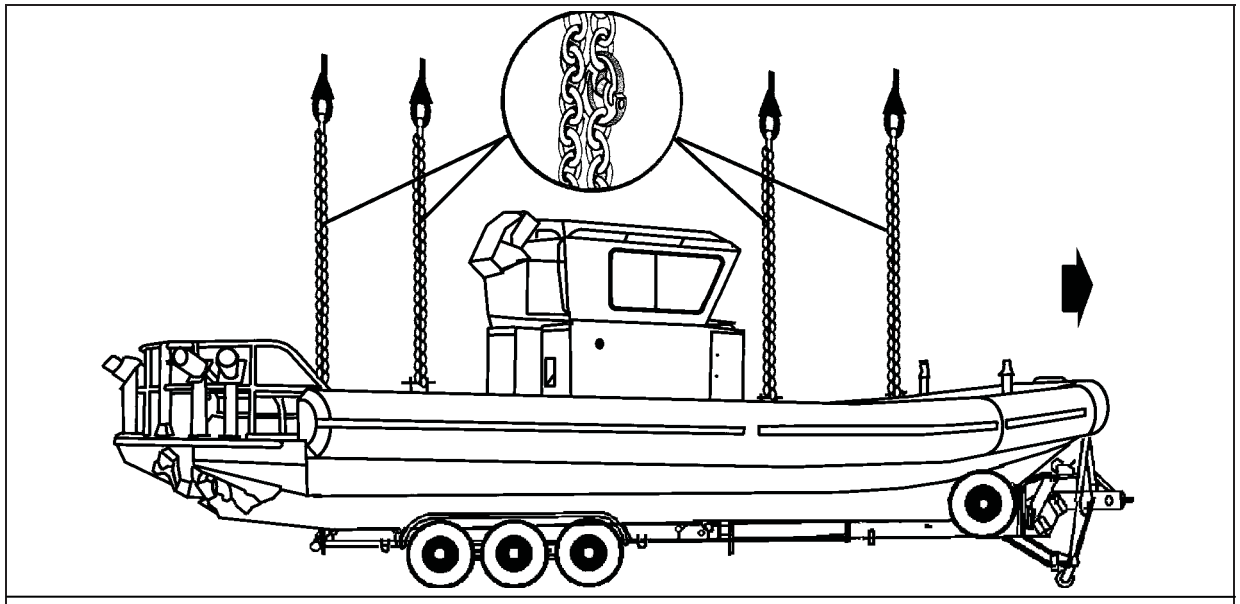

RIGGING STEPS

1. Place two sling legs on apex fitting number 1. Position sling set number 1 on the foredeck.

2. Loop the chain end of the left and right sling legs through their respective lift provisions. Place the correct link from Table 13-12 in the grab hook. Secure the excess chain with tape or Type III nylon cord.

3. Place two sling legs on apex fitting number 2. Position sling set number 2 on top of the foredeck.

4. Loop the chain end of the left and right sling legs through their respective lift provisions. Place the correct link from Table 13-12 in the grab hook.

5. Raise the apex fittings above the load. Cluster and tie (breakaway technique) the sling legs in each sling set together to prevent entanglement during hookup and lift-off.

Figure 13-12. Small Unit Riverine Craft with Trailer

Chapter 14

Suitable Dual-Point Rigging Procedures

INTRODUCTION

14-1. This chapter contains rigging procedures for dual-point lift of loads that are suitable for sling load. Each rigging procedure is found in a paragraph that includes a description of the load, materials required for rigging, and steps to complete the procedure. An applicability paragraph is also a part of each paragraph and identifies the suitable loads. The dual-point rigging procedures for suitable loads are in this section. Paragraphs 14-2 through 14-6 give detailed instructions for rigging loads.

Note. Reach Pendants may be used on dual point loads. Place a Reach Pendant on each apex fitting. A static discharge person is not required when using a Reach Pendant.

M35A1/A2 2 ½-TON CARGO TRUCK

14-2. The M35A1/A2 2 ½-ton cargo truck is rigged for dual-point sling load using the following procedures:

- **Applicability.** The following items in Table 14-1 are suitable for the helicopter(s) listed in the following table by the US Army Natick Soldier Center:

Table 14-1. M35A1/A2 2 ½-Ton Cargo Truck

Nomenclature	*Max Weight (Pounds)*	*Sling Set*	*Link Count Front/Rear*	*Type of Aircraft*
M35A1/A2 2 ½-Ton Cargo Truck	13,180	25K	35/3	CH-47

WARNING

Do not lift this load with the original vehicle lift provisions.

- **Materials.** The following materials are required to rig this load:
  - Sling set (25,000-pound capacity) with one additional apex fitting.
  - Tape, adhesive, pressure-sensitive, 2-inch wide roll.
  - Cord, nylon, Type III, 550-pound breaking strength.
  - Webbing, cotton, 1/4-inch, 80-pound breaking strength.
  - Strap, cargo, tiedown, CGU-1/B (as required).
- **Personnel.** Two persons can prepare and rig this load in 15 minutes.
- **Procedures.** The following procedures apply to this load:
  - **Preparation.** Prepare the load using the following steps:
    - Remove the cargo compartment canvas and bows. Secure the canvas and bows in the bed of the truck.
    - Remove the cab top canvas, lower the windshield, fold the canvas over the windshield, and secure with Type III nylon cord.

- Secure the windshield in the down position with the CGU-1/B cargo tiedown strap.
- Safety tie the hood closed with Type III nylon cord around the hood latch and the grill.
- Ensure the fuel, oil filler, radiator, and battery caps are properly installed and secured. Ensure the battery compartment door is closed. Ensure the fuel tank is not over 3/4 full.
- Secure the seat cushions and doors with Type III nylon cord.
- Engage the emergency brake and place the transmission in neutral.
- Straighten the front wheels and secure the steering wheel with Type III nylon cord.

■ **Rigging.** Rig the load according to the steps in Figure 14-1.

Note. Ensure the hook on the grab hook faces away from the vehicle.

■ **Hookup.** Two hookup teams are used for this load. The static discharge person discharges the static electricity. The forward hookup person stands on the passenger seat and places apex fitting 1 onto the forward cargo hook. The aft hookup person stands in the truck bed and places apex fitting 2 onto the aft cargo hook. The hookup teams then carefully dismount the load and remain close to the load as the helicopter removes slack from the sling legs. When successful hookup is assured, the hookup teams quickly exit the area underneath the helicopter to the designated rendezvous point.

■ **Derigging.** Derigging is the reverse of the preparation and rigging procedures.

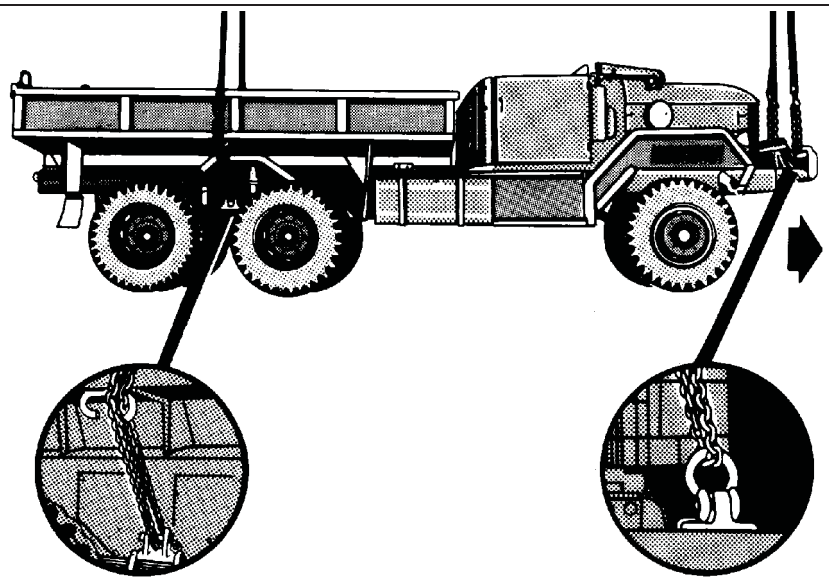

RIGGING STEPS

1. Place two sling legs on apex fitting number 1. Position apex fitting number 1 on top of the hood.

2. Loop the chain end of the left and right sling legs through their respective lift provision located on the front bumper. Place the correct link from Table 14-1 in the grab hook. Secure the excess chain with tape or Type III nylon cord.

Figure 14-1. M35A1/A2 2 1/2-Ton Cargo Truck

RIGGING STEPS (Continued)
3. Place two sling legs on apex fitting number 2. Position apex fitting number 2 on the cargo bed. 4. Loop the chain end of the left and right sling legs through their respective lift provision located on top of the spring housing between the rear wheels. Place the correct link from Table 14-1 in the grab hook. 5. Pull each grab hook up against the side of the truck and tie the chain in the chain guide bracket. Pull both grab hooks together over top of the bed and tie together with 1/4-inch cotton webbing. 6. Raise the apex fittings above the load. Cluster and tie (breakaway technique) the sling legs in each sling set together to prevent entanglement during hookup and lift-off.

Figure 14-1. M35A1/A2 2 1/2-Ton Cargo Truck (Continued)

M149-SERIES WATER TRAILER

14-3. The M149-series water trailer is rigged for dual-point sling load using the following procedures:

- **Applicability.** The following items in Table 14-2 are suitable for the helicopter(s) listed in the following table by the US Army Natick Soldier Center:

Table 14-2. M149-Series Water Trailer

Nomenclature	*Max Weight (Pounds)*	*Sling Set*	*Link Count Front/Rear*	*Type of Aircraft*
Water Trailer, M149/M149A1	Min-2,540 Max-6,060	10K	3/3	CH-47
Water Trailer, M149/M149A2	Min-2,800 Max-6,320	10K	3/3	CH-47

WARNING

The M149, M149A1, and M149A2 water trailers, without the modified clevis type lift provisions, are not certified for sling loading because of inadequate lift provision strength when the trailer is full.

- **Materials.** The following materials are required to rig this load:
  - Sling set (10,000-pound capacity) with one additional apex fitting.
  - Tape, adhesive, pressure-sensitive, 2-inch wide roll.
  - Cord, nylon, Type III, 550-pound breaking strength.
  - Webbing, cotton, 1/4-inch, 80-pound breaking strength.
- **Personnel.** Two persons can prepare and rig this load in 10 minutes.
- **Procedures.** The following procedures apply to this load:
  - **Preparation.** Prepare the load using the following steps:
    - Secure the light cable and air hoses to the drawbar with tape or Type III nylon cord.

- Place the support leg and wheel in the down position.
- Tape the top edge of the rear of the water tank.
- Engage both hand brakes. Close and secure the fill port and tape if necessary.

- **Rigging.** Rig the load according to the steps in Figure 14-2.
- **Hookup.** Two hookup teams are used for this load. The static discharge person discharges the static electricity. The forward hookup person stands on the fender and places apex fitting 2 onto the forward cargo hook. The aft hookup person stands on the tongue and places apex fitting 1 onto the aft cargo hook. The hookup teams then carefully dismount the load and remain close to the load as the helicopter removes slack from the sling legs. When successful hookup is assured, the hookup teams quickly exit the area underneath the helicopter to the designated rendezvous point.
- **Derigging.** Derigging is the reverse of the preparation and rigging procedures.

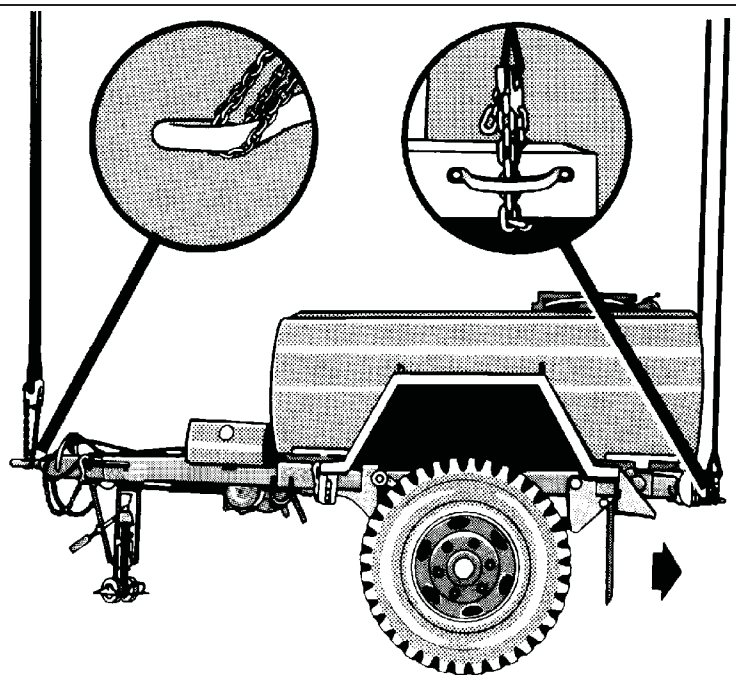

RIGGING STEPS

1. Place two sling legs on apex fitting number 1. Position apex fitting number 1 on top of the water tank.
2. Loop the chain end of the left and right sling legs through the lunette. Place the correct link from Table 14-2 in the grab hook.
3. Place two sling legs on apex fitting number 2. Position apex fitting number 2 on top of the water tank
4. Using the rear lift provisions as a guide to keep the chains in place, route the chain end of the left sling leg down between the tank and the crossmember, under the rear crossmember, and back up through the lift provision. Place the correct link from Table 14-2 in the grab hook. Repeat the procedure with the right chain leg and the right rear lift provision.
5. Raise the apex fittings above the load. Cluster and tie (breakaway technique) the sling legs in each sling set together to prevent entanglement during hookup and lift-off.

Figure 14-2. M149-Series Water Trailer

M114A1 155-MM HOWITZER

14-4. The M114A1 155-mm howitzer is rigged for dual-point sling load using the following procedures:

- **Applicability.** The following item in Table 14-3 is suitable for the helicopter(s) listed in the following table by the US Army Natick Soldier Center:

Table 14-3. M114A1 155-mm Howitzer

Nomenclature	*Max Weight (Pounds)*	*Sling Set*	*Link Count Front/Rear*	*Type of Aircraft*
M114A1 155-mm Howitzer	12,660	25K	55/3	CH-47

- **Materials.** The following materials are required to rig this load:
  - Sling set (25,000-pound capacity) with one additional apex fitting.
  - Tape, adhesive, pressure-sensitive, 2-inch wide roll.
  - Cord, nylon, Type III, 550-pound breaking strength.
  - Webbing, cotton, 1/4-inch, 80-pound breaking strength.
  - Clevis assembly, large, MS 70087-3 (1 each).
  - Strap, cargo, tiedown, CGU-1/B (as required).
- **Personnel.** Two persons can prepare and rig this load in 15 minutes.
- **Procedures.** The following procedures apply to this load:
  - **Preparation.** Prepare the load using the following steps:
    - Stow all howitzer equipment, including sights, in their proper place except the spade key. Stow the spade key in the section chest. Secure all equipment with tape or Type III nylon cord.
    - Secure the section chest on the rear of the trails by routing a CGU-1/B tiedown strap through the handles of the chest and both trail lifting handles. Secure the excess strap with tape.
    - Secure the spades to the brackets with Type III nylon cord. Secure all cables and hoses to the trail sides with tape or Type III nylon cord.
    - Secure the trail latching handle in the closed position with Type III nylon cord and insert the trail locking pin.
    - Position the ballistic shield in the raised position and remove and secure all gun covers.
    - Engage the hand brake.
  - **Rigging.** Rig the load according to the steps in Figure 14-3.
  - **Hookup.** Two hookup teams are used for this load. The static discharge person discharges the static electricity. The forward hookup person stands on the wheels and places apex fitting 1 onto the forward cargo hook. The aft hookup person stands on the trails and places apex fitting 2 onto the aft cargo hook. The hookup teams then carefully dismount the load and remain close to the load as the helicopter removes slack from the sling legs. When successful hookup is assured, the hookup teams quickly exit the area underneath the helicopter to the designated rendezvous point.
  - **Derigging.** Derigging is the reverse of the preparation and rigging procedures.

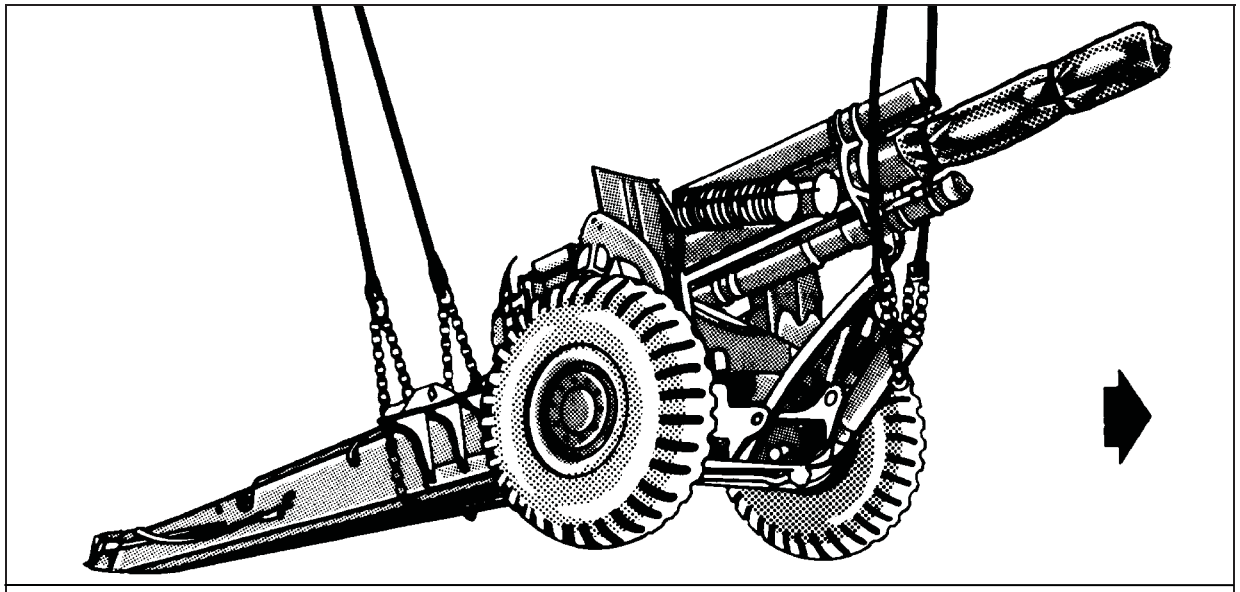

RIGGING STEPS

1. Place two sling legs on apex fitting number 1. Position apex fitting number 1 on top of the barrel.

2. Loop the chain end of the left sling leg through the firing jack locking pin receiver. Place the correct link from Table 14-3 in the grab hook. Repeat the procedure with the right sling leg on the right side of the barrel. Secure the excess chain with tape or Type III nylon cord.

3. Place two sling legs on apex fitting number 2. Position apex fitting number 2 on top of the breech.

4. Route the chain end of the left sling leg through the large clevis, down through the center of the trails, under the left trail, and up through the spade key bracket on the outside of the left trail. Place the correct link from Table 14-3 in the grab hook.

5. Route the chain end of the other sling leg through the large clevis, down through the center of the trails, under the right trail, and up through the aft spade key bracket on the outside of the right trail. Place the correct link from Table 14-3 in the grab hook.

6. Raise the apex fittings above the load. Cluster and tie (breakaway technique) the sling legs in each sling set together to prevent entanglement during hookup and lift-off.

Figure 14-3. M114A1 155-mm Howitzer

ONE CONEX CONTAINER

14-5. One conex container is rigged for dual-point sling load using the following procedures:

- **Applicability.** The following item in Table 14-4 is suitable for the helicopter(s) listed in the following table by the US Army Natick Soldier Center:

Table 14-4. One Conex Container

Nomenclature	*Max Weight (Pounds)*	*Sling Set*	*Link Count Front/Rear*	*Type of Aircraft*
One Conex Container	1,578	10K	Listed in Rigging Steps	CH-47

- **Materials.** The following materials are required to rig this load:
  - Sling set (10,000-pound capacity) with one additional apex fitting.
  - Tape, adhesive, pressure-sensitive, 2-inch wide roll.
  - Cord, nylon, Type III, 550-pound breaking strength.
  - Webbing, cotton, 1/4-inch, 80-pound breaking strength.
  - Strap, cargo, tiedown, CGU-1/B (4 each).
- **Personnel.** Two persons can prepare and rig this load in 5 minutes.
- **Procedures.** The following procedures apply to this load:
  - **Preparation.** Prepare the load using the following steps:
    - Close the conex doors.
    - Secure the doors with CGU-1/B tiedown straps.
  - **Rigging.** Rig the load according to the steps in Figure 14-4.
  - **Hookup.** Two hookup teams stand on top of the container. The static discharge person discharges the static electricity. The forward hookup person places apex fitting 1 onto the forward cargo hook. The aft hookup person places apex fitting 2 onto the aft cargo hook. The hookup teams then carefully dismount the load and remain close to the load as the helicopter removes slack from the sling legs. When successful hookup is assured, the hookup teams quickly exit the area underneath the helicopter to the designated rendezvous point.
  - **Derigging.** Derigging is the reverse of the preparation and rigging procedures.

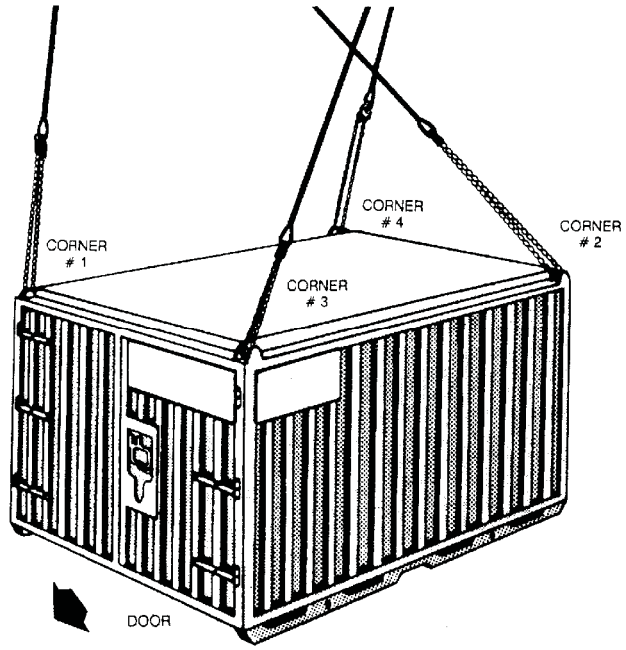

Figure 14-4. One Conex Container

RIGGING STEPS
1. Place two sling legs on apex fitting number 1. Position apex fitting number 1 on top of the door end of the container. 2. Loop the chain end of one sling leg through the lift provision on the top of corner one and insert link 86 in the grab hook. Secure the excess chain with tape or Type III nylon cord. 3. Loop the chain end of the other sling leg through the lift provision on the top of corner 2 and insert link 3 in the grab hook. 4. Place two sling legs on apex fitting number 2. Position apex fitting number 2 on top of the container. 5. Route one sling leg to the outside of sling leg 2 and loop the chain end through the lift provision on the top of corner 3. Insert link 51 in the grab hook. Secure the excess chain with tape or Type III nylon cord. 6. Route the other sling leg to the outside of sling leg 2 and loop the chain end through the lift provision on the top of corner 4. Insert link 86 in the grab hook. Secure the excess chain with tape or Type III nylon cord. 7. Raise the apex fittings above the load. Cluster and tie (breakaway technique) the sling legs in each sling set together to prevent entanglement during hookup and lift-off.

Figure 14-4. One Conex Container (Continued)

ONE MILVAN CONTAINER

14-6. One MILVAN container is rigged for dual-point sling load using the following procedures:

- **Applicability.** The following item in Table 14-5 is suitable for the helicopter(s) listed in the following table by the US Army Natick Soldier Center:

Table 14-5. One MILVAN Container

Nomenclature	*Max Weight (Pounds)*	*Sling Set*	*Link Count Front/Rear*	*Type of Aircraft*
One MILVAN Container	4,710	10K	3/33	CH-47

- **Materials.** The following materials are required to rig this load:
  - Sling set (10,000-pound capacity) with one additional apex fitting.
  - Tape, adhesive, pressure-sensitive, 2-inch wide roll.
  - Cord, nylon, Type III, 550-pound breaking strength.
  - Webbing, cotton, 1/4-inch, 80-pound breaking strength.
- **Personnel.** Two persons can prepare and rig this load in 10 minutes.
- **Procedures.** The following procedures apply to this load:
  - **Preparation.** Prepare the load by closing and securing the container doors.
  - **Rigging.** Rig the load according to the steps in Figure 14-5.
  - **Hookup.** Two hookup teams stand on top of the container. The static discharge person discharges the static electricity. The forward hookup person (door end) places apex fitting 1 onto the forward cargo hook. The aft hookup person places apex fitting 2 onto the aft cargo

hook. The hookup teams then carefully dismount the load and remain close to the load as the helicopter removes slack from the sling legs. When successful hookup is assured, the hookup teams quickly exit the area underneath the helicopter to the designated rendezvous point.

- **Derigging.** Derigging is the reverse of the preparation and rigging procedures.

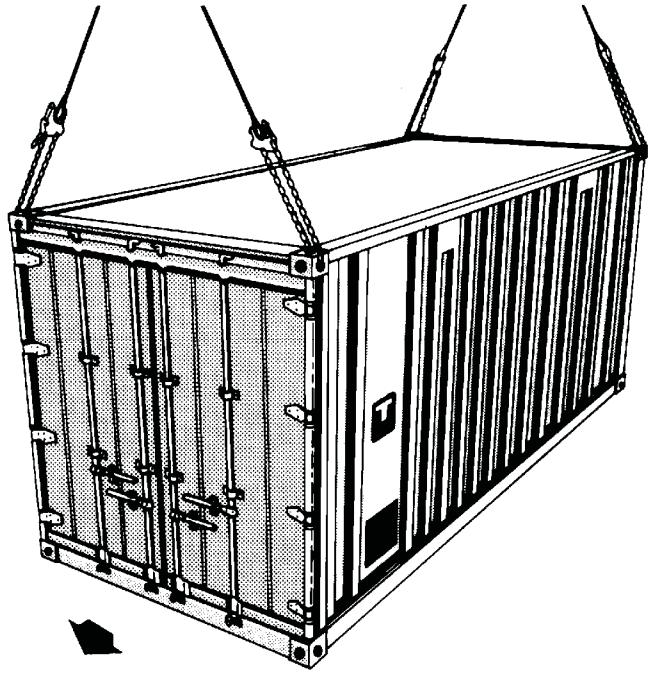

RIGGING STEPS

1. Place two sling legs on apex fitting number 1. Position apex fitting number 1 on top of the container (door end).

2. Loop the chain end of the left and right sling legs through their respective openings on the side of the corner lift provision. Place the correct link from Table 14-5 in the grab hook.

3. Place two sling legs on apex fitting number 2. Position apex fitting number 2 on the container.

4. Loop the chain end of the left and right sling legs through their respective openings on the side of the corner lift provision. Place the correct link from Table 14-5 in the grab hook. Secure the excess chain with tape or Type III nylon cord.

5. Raise the apex fittings above the load. Cluster and tie (breakaway technique) the sling legs in each sling set together to prevent entanglement during hookup and lift-off.

Figure 14-5. One MILVAN Container

This page intentionally left blank.

Appendix A

National Stock Numbers for Slings, Nets, and Spare Parts

10,000- OR 25,000- POUND CAPACITY SLING SET (CIRCLED NUMBERS CORRESPOND WITH NSNs OF IDENTIFIED PARTS)

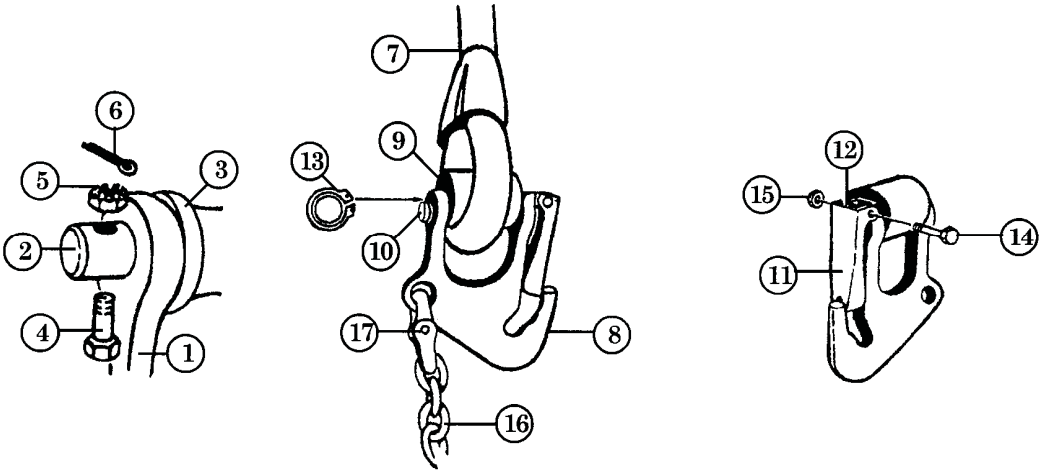

10,000-POUND CAPACITY SLING SET COMPONENTS

	NSN	*PART NUMBER*	*DESCRIPTION*	*QTY PER SET*
	1670-01-027-2902	38850-00001-043	Sling Set Assembly Complete LIN T79003	1 ea
1	4030-01-048-4045	38850-00004-045	Shackle Assembly	1 ea
2	5315-01-115-3482	38850-00008-101	Pin, Apex Fitting	1 ea
3	5365-01-235-0908	38850-00015-104	Spacer, Apex	1 ea
4	5306-00-944-1536	NAS1306-16D	Bolt	1 ea
5	5310-00-207-9274	AN 320C6	Nut, Castellated	1 ea
6	5315-00-2341864	MS 24665-302	Cotter Pin	1 ea
7	4020-01-047-6814	38850-00009-055	Rope Assembly	4 ea
8	4030-01-048-4046	38850-00011-041	Grabhook Assembly	4 ea
9	5364-01-109-2543	38850-00015-101	Spacer, Grabhook	4 ea
10	5315-01-121-0497	38850-00008-103	Pin, Spacer	4 ea
11	4030-01100-1684	38850-00017-101	Keeper, Grabhook	4 ea
12	5360-01-115-6833	38850-00019-101	Keeper, Spring	4 ea
13	5325-01-046-3670	MS 3217-1050	Snap Ring	4 ea
14	5306-00-771-7621	NAS 1303-21	Bolt, Shear	4 ea
15	5310-00-807-1467	MS 21042-3	Nut, Lock	4 ea
16	4010-01-058-4772	38850-00053-101	Chain, 8-foot Length	4 ea
17	4010-01-231-3388	5779125/664228	Link, Coupling	4 ea
18	8460-00-606-8366	Mil-41835	Kit Bag, Flyer's	1 ea

25,000-POUND CAPACITY SLING SET COMPONENTS

	NSN	PART NUMBER	DESCRIPTION	QTY PER SET
	1670-01-027-2900	38850-00001-044	Sling Set Assembly Complete LIN T79009	1 ea
1	4030-01-048-4044	38850-00004-046	Shackle Assembly	1 ea
2	5315-01-119-9065	38850-00008-102	Pin, Apex Fitting	1 ea
3	1670-01-235-0907	38850-00015-105	Spacer, Apex	1 ea
4	5306-00-944-2659	NAS1306-22D	Bolt	1 ea
5	5310-00-207-9274	AN 320C6	Nut, Castellated	1 ea
6	5315-00-234-1864	MS 24665-302	Cotter Pin	1 ea
7	1670-01-047-6815	38850-00009-056	Rope Assembly	4 ea
8	4030-01-048-4047	38850-00011-046	Grabhook Assembly	4 ea
9	1670-01-109-2544	38850-00015-102	Spacer, Grabhook	4 ea
10	5315-01-121-2874	38850-00008-104	Pin, Spacer	4 ea
11	4030-01-100-1685	38850-00017-102	Keeper, Grabhook	4 ea
12	5360-01-115-6833	38850-00019-101	Keeper, Spring	4 ea
13	5365-00-261-3918	MS 3217-1075	Snap Ring	4 ea
14	5306-00-771-7621	NAS 1303-21	Bolt, Shear	4 ea
15	5310-00-807-1467	MS 21042-3	Nut, Lock	4 ea
16	4010-01-058-4771	38850-00053-102	Chain, 8-foot Length	4 ea
17	4010-01-231-3388	664241	Link, Coupling	4 ea
18	8460-00-606-8366	Mil-k-41835	Kit Bag, Flyer's	1 ea

15,000-POUND CAPACITY MULTILEG SLING SET ASSEMBLY

NSN	PART NUMBER	DESCRIPTION	QTY PER SET
1670-00-902-3080	3900061	Sling Multileg Assembly, LIN T79009, TAMCN B2030	1 ea
1670-00-946-8719	AC6000292	Web Ring Assembly	1 ea
1670-00-719-6243	MS24553-1	Link Assembly, Web Ring	1 ea
1670-00-946-8631	3110167	Sling Leg Assembly	4 ea
N/A	3910112-5	Keeper, 5-inch, Leg Assembly	4 ea
N/A	391011-1	Keeper, 6 1/4-inch, Leg Assembly	4 ea
1670-00-719-6243	MS24553-1	Link Assembly, Sling Leg	4 ea
N/A	31610	Grab Link	4 ea
N/A	FE 7623-3	Keeper, Grab Link	4 ea
N/A	34012-18	Spring Keeper, Grab Link	4 ea
5310-00-167-0818	AN960-10	Pin, Keeper, Grab Link	4 ea
5315-00-812-3765	MS20392-2033	Latch, Safety Hook	4 ea
5315-00-839-2325	MS24665-132	Cotter Pin, Keeper, Grab Link	4 ea
N/A	31611	Coupling Link	4 ea
N/A	34080-4	Chain	4 ea

40,000-POUND CAPACITY SLING SET COMPONENTS

NSN	*PART NUMBER*	*DESCRIPTION*	*QTY PER SET*
3940-01-183-2118	TAMCN B 2035	Sling Set Assembly Complete	1 ea
4838-01-199-9562	FE8109-1	Apex Shackle Assembly	1 ea
N/A	FE8109-5	Shackle	1 ea
N/A	FE8109-3	Pin, Shackle, Apex	1 ea
N/A	FE8109-2	Spacer, Shackle, Apex	1 ea
5306-00-944-1538	NAS1306-21D	Bolt	1 ea
5310-00-176-8110	AN 320C6	Nut, Castellated	1 ea
5315-00-234-1864	MS 24665-302	Cotter Pin	1 ea
3940-01-194-9364	JETSWMC-2000	Sling Leg	4 ea
4030-01-197-1629	FE8103-1	Grab Link Assembly	4 ea
N/A	FE8103-4	Spacer, Grab Link	4 ea
5306-00-151-1482	AN12-42	Bolt, Grab Link	4 ea
5310-00-167-1292	AN310-12	Nut, Grab Link	4 ea
5315-00-285-7161	MS24665-377	Cotter Pin, Grab Link	4 ea
N/A	FE7623-3	Keeper, Grab Link	4 ea
5310-00-812-3765	MS20392-2033	Pin, Keeper, Grab Link	4 ea
N/A	34012-18	Spring, Keeper, Grab Link	4 ea
5310-00-167-0818	AN960-10	Washer, Keeper, Grab Link	4 ea
5315-00-839-2325	MS24665-132	Cotter Pin, Keeper, Grab Link	4 ea
4010-01-081-5114	577-0815	Link, Coupling	4 ea
N/A	607050	Chain, 8-Foot	4 ea

TYPE XXVI NYLON MULTILOOP LINE

NSN	*Description*
1670-01-062-6301	2-loop, 3 foot
1670-01-062-6306	4-loop, 3 foot
1670-01-062-6304	2-loop, 9 foot
1670-01-062-6305	4-loop, 9 foot
1670-01-063-7760	2-loop, 11 foot
1670-01-062-6310	4-loop, 11 foot
1670-01-062-6303	2-loop, 12 foot
1670-01-062-6307	4-loop, 12 foot
1670-01-063-7761	2-loop, 16 foot
1670-01-062-6308	4-loop, 16 foot
1670-01-062-6302	2-loop, 20 foot
1670-01-064-4453	4-loop, 20 foot

ROUNDSLINGS

NSN	PART NUMBER	CAPACITY	LENGTH
1670-01-388-6789	PRS 2E008	5,300-pound	8 foot
1670-01-388-3845	PRS 2E017	5,300-pound	17 foot
1670-01-388-8480	PRS 3E008	8,400-pound	8 foot
1670-01-388-8479	PRS 3E017	8,400-pound	17 foot
1670-01-388-3917	PRS 5E030	13,200-pound	30 foot
1670-01-388-3901	PRS 7E065	21,200-pound	65 foot
1670-01-388-3965	PRS 7E070	21,200-pound	70 foot

5,000- AND 10,000-POUND CAPACITY CARGO NETS AND COMPONENTS

NSN	PART NUMBER	DESCRIPTION	QTY PER NET
1670-01-058-3811	6018-5	Net, 5,000-pound capacity, LIN N02776, TAMCN J3121	1 ea
1670-01-058-3810	6018-10	Net, 10,000-pound capacity, LIN N02708, TAMCN J3120	1 ea
1670-01-070-5276	6019	Apex fitting	1 ea
1670-01-067-9989	6020	Hook	4 ea
4020-01-118-5826	6018-15	Repair cord, used on part no. 6018-5	As req
4020-01-119-5994	6018-20	Repair cord, used on part no. 6018-10	As req
8030-01-152-2286	2300-3	Antiabrasion compound, olive drab	As req
8030-01-154-2327	WB1003 black	Antiabrasion compound, black	As req
1080-00-108-1155	13226EO964-2	Transportease	1 ea*
* Alternate NSN is 1080-00-107-8580. These cases are designed and marked for use with the camouflage screen. Camouflage system markings should be replaced with “Helicopter External Cargo Net, 10,000-pound capacity.”			

PROTECTIVE EQUIPMENT

NSN	Description
4240-00-052-3776	Eye goggles
8415-01-158-9445	Gloves, electrical workers, size 9
8415-01-158-9446	Gloves, electrical workers, size 10
8415-01-158-9447	Gloves, electrical workers, size 11
8415-01-158-9448	Gloves, electrical workers, size 12
8415-00-268-7859	Gloves, leather
4240-00-759-3290	Protector, hearing
8415-00-071-8786	Helmet, flight deck (USN/USMC/USAF)
6515-00-137-6345	Plugs, ear, hearing protection

MISCELLANEOUS EQUIPMENT AND MATERIAL

NSN	*Description*
4030-00-360-0304	Clevis assembly, small, MS 70087-1
5305-00-726-2553	Bolt
5310-00-835-2037	Nut
4030-00-678-8562	Clevis assembly, medium, MS 70087-2
5305-00-940-8069	Bolt
5310-00-842-1190	Nut
4030-00-090-5354	Clevis assembly, large, MS 70087-3
5305-00-177-5617	Bolt
5310-00-891-3428	Nut
4020-00-240-2146	Cord, nylon, Type III, 550-pound breaking strength
8305-00-958-3685	Felt sheeting, 1/2-inch thick, 30-inch wide
8305-00-191-1101	Felt sheeting, 1/2-inch thick, 60-inch wide
7520-00-079-0286	Ink, marking, parachute, orange-yellow, marker
7520-00-634-6583	Ink, marking, parachute, orange-yellow, liquid
7520-00-230-2734	Ink, marking, parachute, strata-blue, marker
7520-00-286-5362	Ink, marking, parachute, strata-blue, liquid
5825-00-917-3738	Light, beacon, beanbag
6260-01-074-4230	Light, chemical wand, 30-minute glow time
6260-00-106-7478	Light, chemical wand, 6-hour glow time
6260-01-074-4229	Light, chemical wand, 12-hour glow time
1670-00-783-5988	Link assembly, Type IV
1670-00-212-1149	MB-1 chain assembly, 10,000-pound capacity
1670-00-516-8405	Chain assembly
1670-00-753-3928	Pad, energy-dissipating, honeycomb
8135-00-664-6958	Padding, cellulose, 20-inch by 60-foot
8135-00-808-6446	Padding, cellulose, 24-inch by 125-foot
8345-00-174-6865	Panel, marker, red-yellow, VS-17
4020-00-231-2581	Rope, 3/8-inch, TR605
4020-00-968-1357	Rope, fibrous, 1/2-inch, MIL-R-17343
6850-00-264-9038	Solvent, dry cleaning, PD-680
7510-00-266-5016	Tape, adhesive, pressure-sensitive, 2-inch wide roll, green
7510-00-074-4969	Tape, adhesive, pressure-sensitive, 2-inch wide roll, red
1670-00-725-1437	Tie-down strap, CGU-l/B, 5,000-pound capacity
5340-01-204-3009	Tie-down strap, web nylon, 5,000-pound capacity
1670-00-937-0271	Tie-down strap, web nylon, 10,000-pound capacity
5365-00-937-0147	D-Ring, aerial delivery
1670-00-937-0272	Load binder assembly
1670-00-360-0340	Quick-fit strap fastener

Two-point link assembly components:

NSN	*Description*
5306-00-435-8994	Bolt, 1-inch diameter, 4-inch long (2 each)
5310-00-232-5165	Nut, 1-inch diameter (2 each)
1670-00-003-1954	Plate, side, 5 1/2-inch long (2 each)
5365-00-007-3414	Spacer, large

Wand

NSN	*Description*
1670-00-574-8044	Wand, static discharge
1670-01-192-5535	Wand, static discharge, 3-foot, PN 1610AS100-1, TAMCN C6254
5920-01-347-0728	Wand, static discharge, 5-foot, PN 1610AS100-2, TAMCN C6252

Webbing

NSN	*Description*
8305-00-082-5752	Webbing, nylon, tubular, 1/2-inch, 1,000-pound breaking strength
8305-00-268-2411	Webbing, cotton, 1/4-inch, 80-pound breaking strength

External Lift Devices

NSN	*Description*
1670-00-587-3421	Bag, cargo, A-22, LIN B 14181, TAMCN C4070
3940-00-892-4380	Cargo net, 14-foot square, 10-inch mesh
3940-00-892-4374	Cargo net, 14-foot square, 8-inch mesh
1450-01-219-4360	Mk105 pendant
1450-00-414-7172	Mk105 hoisting sling assembly, 6,000-pound capacity
1450-00-881-8736	Mk105 sling leg assembly
4020-01-365-3115	Pendant, reach, 11,000-pound capacity
4020-01-337-3185	Pendant, reach, 25,000-pound capacity
1670-01-003-0803	Releasable swivel hook pendant sling AC6000500 Mod 1
1450-00-169-6927	Sling, pallet, Mk86, LIN S80670
1398-00-004-9175	Sling, pallet, Mk100, LIN S80738
1670-00-103-6617	Swivel hook sling leg, AC6000153 (USMC, USN)
1670-01-531-1882	Spreader bar, 15,000-pound

Appendix B

Sling Conversion Chart

Sling Conversion Chart

10,000-POUND SLING SET CHAIN LINK NUMBER	25,000-POUND SLING SET CHAIN LINK NUMBER	40,000-POUND SLING SET CHAIN LINK NUMBER	15,000-POUND MULTILEG SLING SET CHAIN LINK NUMBER
	3		51
	4		52
3	5		53
4	6		54
5	6		54
6	7	3	55
7	8	4	56
8	9	4	57
9	9	5	57
10	10	6	58
11	11	6	59
12	11	7	59
13	12	7	60
14	13	8	61
15	14	9	62
16	14	9	62
17	15	10	NO FURTHER CONVERSIONS FOR 15,000-POUND MULTILEG SLING SET
18	16	11	
19	16	11	
20	17	12	
21	18	13	
22	19	13	
23	19	14	
24	20	15	
25	21	15	
26	21	16	
27	22	16	
28	23	17	
29	24	18	
30	24	28	
31	25	19	
32	26	20	
33	27	20	
34	27	21	

Sling Conversion Chart (Continued)

10,000-POUND SLING SET CHAIN LINK NUMBER	25,000-POUND SLING SET CHAIN LINK NUMBER	40,000-POUND SLING SET CHAIN LINK NUMBER	15,000-POUND MULTILEG SLING SET CHAIN LINK NUMBER
35	28	21	NO FURTHER CONVERSIONS FOR 15,000-POUND MULTILEG SLING SET
36	29	22	
37	30	22	
38	31	23	
39	31	24	
40	32	24	
41	33	25	
42	34	25	
43	34	26	
44	35	26	
45	36	27	
46	37	28	
47	38	28	
48	39	29	
49	39	29	
50	40	30	
51	41	30	
52	42	31	
53	43	32	
54	44	32	
55	45	33	
56	45	33	
57	46	34	
58	47	34	
59	48	35	
60	49	36	
61	50	36	
62	50	37	
63	51	37	
64	52	38	
65	53	38	
66	54	39	
67	54	40	
68	55	40	
69	56	41	
70	57	41	

Sling Conversion Chart (Continued)

10,000-POUND SLING SET CHAIN LINK NUMBER	25,000-POUND SLING SET CHAIN LINK NUMBER	40,000-POUND SLING SET CHAIN LINK NUMBER	15,000-POUND MULTILEG SLING SET CHAIN LINK NUMBER
71	57	42	NO FURTHER CONVERSIONS FOR 15,000-POUND MULTILEG SLING SET
72	58	42	
73	59	43	
74	60	44	
75	61	44	
76	61	45	
77	62	46	
78	63	46	
79	64	47	
80	65	48	
81	65	48	
82	66	49	
83	67	49	
84	68	50	
85	68	51	
86	69	51	
87	70	52	
88	71	53	
89	72	53	
90	72	54	
91	73	55	
92	74	55	
93	75	56	
94	76	57	
95	76	57	
96	77	58	
97	78	58	
98	79	59	
99	79	60	
100	80	60	
101	81	61	
102	82	62	
103	83	62	
104	83	63	
105	84	64	
106		64	
107		65	

This page intentionally left blank.

Appendix C

Airspeed Factors

Each certified sling load under goes a flight evaluation before it is certified. In the table that follows: the nomenclature, weight of the item, paragraph number of the item, and the maximum evaluated airspeed is represented.

Airspeed Factors

Nomenclature	*Paragraph Number*	*Max Weight (Pounds)*	*Evaluated Air Speed (Knots)*
Truck, Ambulance, M996	2-2	7,400	130
Truck, Ambulance, M997	2-2	7,400	130
Truck, Ambulance, M997A1	2-2	7,600	120
Truck, Ambulance, M997A2	2-2	7,600	130
TOW Missile Carrier (HMMWV), M966/M1036/M1045/M1046	2-3	Varies by Mode	130
TOW Missile Carrier, HMMWV, M1045A2	2-3	10,300	130
Armament Carrier, HMMWV, M1025/M1026	2-3	8,200	130
Armament Carrier, HMMWV, M1043/M1044	2-3	8,400	130
Armament Carrier, HMMWV, M1025A2/M1043A2	2-3	10,300	130
Up-Armored HMMWV, M1114	2-3	12,100	CH-47-100 CH-53-130
Armament Carrier, HMMWV, M1151 (Empty)	2-3	7,300	125
Armament Carrier, HMMWV, M1151 (Loaded))	2-3	11,500	125
Armament Carrier, HMMWV, M1043A2 with MAK (USMC)	2-3	10,300	85
Truck, 1 1/4-ton, HMMWV, M998/M1038	2-4	7,700	CH-47-125 CH-53-130
Truck, 1 1/4-ton, HMMWV, M998 with AN/MRC-110A Radio Set	2-4	7,700	CH-47-125 CH-53-130
Truck, 1 1/4-ton, HMMWV, M998A1, Joint Surveillance Target Attack Radar (JSTAR), Support Vehicle	2-4	7,500	125
Truck, 1 1/4-ton, HMMWV, Modified, (GVW 9,400 lbs), M1037	2-4	9,400	125
Truck, 1 1/4-ton, Heavy HMMWV, Cargo Variant, M1097	2-4	10,000	125
Truck, 1 1/4-ton, Heavy HMMWV, Cargo Variant, M1097	2-4	10,001	125
Truck, 1 1/4-ton, Heavy HMMWV, Cargo Variant, M1097A1	2-4	10,300	125
Truck, 1 1/4-ton, Heavy HMMWV, Cargo Variant, M1097A2	2-4	10,300	125

Nomenclature	*Paragraph Number*	*Max Weight (Pounds)*	*Evaluated Air Speed (Knots)*
Truck, 1 1/4-ton, Heavy HMMWV, Cargo Variant, M1097/M1097A2, Integrated System Control (ISYSCON), Support Carrier/Radio Vehicle	2-4	10,300	125
Truck, 1 1/4-ton, Heavy HMMWV, Cargo Variant, M1097/M1097A2, Tactical Messaging System, Transit Case Carrier	2-4	10,300	125
Truck, 1 1/4-ton, HMMWV with MAK, M1123, 2 Door or 4 Door Passenger Compartment (USMC)	2-4	10,300	90
Truck, 1 1/4-ton, Heavy HMMWV, Cargo Variant, M1152 (Empty)	2-4	7,300	125
Truck, 1 1/4-ton, Heavy HMMWV, Cargo Variant, M1152 (Loaded)	2-4	11,500	125
NC Operations	2-5	8,800	120
NC Switch	2-5	8,513	120
NC LOS (V3)	2-5	8,611	120
NC Management	2-5	8,800	120
NC Support Vehicle	2-5	8,400	120
LEN Operations	2-5	8,800	120
LEN Switch	2-5	8,800	120
LEN LOS (V4)	2-5	8,800	120
LEN Management	2-5	8,800	120
LEN Cable Vehicle	2-5	8,180	120
SCC Command	2-5	8,800	120
SCC Planning	2-5	8,300	120
SCC Technical	2-5	8,507	120
LOS (V1)	2-5	8,800	120
LOS (V2)	2-5	8,500	120
Radio Access Unit	2-5	8,800	120
SEN (V1)	2-5	8,800	120
SEN (V2)	2-5	8,800	120
Maintenance #1	2-5	8,084	120
Maintenance #2	2-5	8,350	120
Battalion Spares	2-5	8,800	120
Company Spares	2-5	7,850	120
AN/TLQ-17	2-5	8,200	120
AN/TLQ-17A (V3)	2-5	8,040	120
Deployable Media Production Center	2-5	7,840	120
Operational Control Group (OCG) /Firefinder AN/TPQ-36 (V) Block IIB	2-5	7,500	120
S-250/S-250E	2-6	10,001	120
AN/TRC-170 Communication Shelter	2-6	9,240	130
TRQ-32, Intelligence and Electronic Warfare (IEW)	2-6	9,700	120

Nomenclature	*Paragraph Number*	*Max Weight (Pounds)*	*Evaluated Air Speed (Knots)*
System			
Platoon Operations Center (POC), Intelligence and Electronic Warfare (IEW) System	2-6	9,700	120
Mobile Subscriber Equipment Contingency Communications Package/Light Forces Contingency Communications Package in S-250E	2-6	9,993	120
Mobile Subscriber Equipment Contingency Communications Package/Light Forces Contingency Communications Package in S-250	2-6	8,913	120
LOS (V1)	2-6	9,038	120
LOS (V2)	2-6	9,038	120
LOS (V3)	2-6	9,038	120
LOS (V4)	2-6	9,038	120
NODAL Support Vehicle	2-6	8,250	120
Digital Group Multiplexer (DGM) AN/TRC-138C	2-7	9,020	120
High Frequency Communications Central AN/TRC-120	2-7	8,765	150
High Mobility Downsized (HMD) Direct Air Support Central	2-8	8,420	120
Operations Central (OC) Group Firefinder AN/TPQ-36 (V) 8	2-8	8,620	120
Integrated Meteorological Systems (IMETS), Block I & II	2-8	9,050	120
Enhanced Position Location Reporting System (EPLRS) Downsized Net Control Station (NCS-E(D))	2-8	10,000	120
High Frequency Communications Central AN/TRC 120	2-8	8,765	150
Tactical Remote Sensor System (TRSS) Sensor Mobile Monitoring System (SMMS)	2-8	7,685	120
Meteorological Measuring Set AN/TMQ-41	2-8	7,770	110
Air Defense Communications Platform AN/MSQ-124	2-8	10,000	120
Marine Expeditionary Force Intelligence Analysis System S2	2-8	9,126	100
Marine Expeditionary Force Intelligence Analysis System S1	2-8	9,194	100
Tactical Control and Analysis Center	2-8	9,300	100
Communications Data Link Systems on M1097A2	2-8	9,900	120
Operations Central (OC) Group Firefinder AN/TPQ-36 (V) 8	2-9	8,620	120
Integrated Meteorological Systems (IMETS), Block I & II	2-9	9,050	120
Digital Group Multiplexer (DGM) AN/TRC-138C	2-9	9,020	120

Nomenclature	*Paragraph Number*	*Max Weight (Pounds)*	*Evaluated Air Speed (Knots)*
High Mobility Digital Group Multiplexer Assemblage (HMDA) AN/TRC-173B, AN/TRC-174B, AN/TRC-175B	2-9	9,100	120
Marine Expeditionary Force Intelligence Analysis System (IAS)	2-9	9,220	120
Spare Equipment and Maintenance Shelter AN/TSQ-190 (V) 1	2-9	9,220	120
Meteorological Measuring Set AN/TMQ-41	2-9	8,200	110
Forward Area Air Defense Command Control System AN/TSQ-183	2-9	7,561	90
Forward Area Air Defense Command Control System AN/TSQ-184	2-9	7,297	90
Mobile Radio Broadcasting Subsystem (MRBS)	2-9	9,746	120
Mobile Radio (MR) Cargo Vehicle	2-9	9,907	120
Mobile Television Broadcasting Subsystem (MTBS)	2-9	9,295	120
Mobile Television (MT) Cargo Vehicle	2-9	9,637	120
Mission Vehicle for the Common Ground Station, Joint Surveillance Target Attack Radar (JSTAR) System	2-9	10,300	120
Advanced Field Artillery Tactical Data Systems (AFATADS), System #1, RWS with a CHS-2 AN/GYG-3(V)1	2-9	8,882	100
AN/TTC-56 Single Shelter Switch (SSS)	2-10	11,500	120
Digital Topographic Support System-Light (DTSS-L), AN/TYQ-67 (V)1	2-10	11,500	100
Integrated System Control (ISYSCON), AN/TYQ-76-B, (V)1, (V)2, and Degraded configuration	2-10	11,500	100
Trojan Spirit Lite (V)3 Support Vehicle, AN/TSQ-226(V)3	2-10	11,500	120
Shadow Tactical Unmanned Aerial Vehicle (TUAV), Air Vehicle Transport (AVT)	2-10	11,500	100
Shadow Tactical Unmanned Aerial Vehicle (TUAV), Maintenance Section Multifunctional (MSM)	2-10	11,500	100
Common Ground Station, Joint Surveillance Target Attack Radar (JSTAR) System (V)2	2-10	11,500	120
Tactical Airspace Integration System (TAIS), AN/TSQ-221	2-10	11,500	100
Meteorological Measuring System-Profiler, AN/TMQ-52	2-10	11,500	100
IMETS AN/TMQ-40C and AN/TMQ-40D	2-10	11,500	100
Joint Tactical Information Distribution System (JTIDS), AN/TYQ-JTIDS Shelter on M1097 HMMWV	2-11	10,000	120

Nomenclature	*Paragraph Number*	*Max Weight (Pounds)*	*Evaluated Air Speed (Knots)*
AN/TSM-210 Electronic Shop on M1113 HMMWV	2-11	10,360	120
Deployable Print Production Center	2-11	11,145	120
Special Operations Media System	2-12	9,080	120
Tactical Data Gateway Shelter on M1097A1	2-13	9,580	120
Smoke, Generator Set, M157 on M1037	2-14	7,400	120
Smoke, Generator Set, M157 on M1097	2-14	8,025	120
Smoke, Generator Set, M157A1E1 on M1097	2-14	8,035	120
M1113 with M56 Smoke Generating System without Graphite in Tank	2-15	9,400	120
M1113 with M56 Smoke Generating System with Graphite in Tank	2-15	9,400	120
Side by side M56 Smoke Generating Systems on M1113s	2-16	9,387	100
Cargo Troop Carrier, M998/M1038	217	8,400	125
Cargo Troop Carrier, M998A1/M1038A1	2-17	7,880	125
Armament Carrier, M1025/M1026/M1025A1/M1026A1/M1043/M1044	2-17	8,400	125
Armament Carrier, M1025A2	2-17	10,000	125
Armament Carrier, M1043A1/M1044A1	2-17	8,580	125
Armament Carrier, M1043A2	2-17	10,000	125
Tow Missile Carrier, M966/M966A1/M1036/M1045/M1046	2-17	8,400	125
Tow Missile Carrier, M1045A1/M1046A1	2-17	8,580	125
125Tow Missile Carrier, M1045A2	2-17	10,000	125
M1037 Modified	2-17	9,400	125
Shelter Carrier, M1097/M1097A1/M1097A2	2-17	10,000	125
M1123 HMMWV	2-17	10,000	125
Cargo Bed Cover, HMMWV Type I, Camouflage, NSN: 5411-01-647-3243	2-18	10,000	100
Cargo Bed Cover, HMMWV Type I, Sand, NSN: 5411-01-479-1928	2-18	10,000	100
Truck, 1 1/4-Ton, HMMWV, M998 with Helmet Hardtop, Basic, Models 1551/1551-0/1551-1/1551-3/1551-4/1551-5/1551-6/1552/1552-0/1552-1/1552-3/1552-4/1552-5/1552-6	2-19	7,700	130
Two, Trucks, 1 1/4-Ton, HMMWV, M998 with Helmet Hardtop, Basic, Models 1551/1551-0/1551-1/1551-3/1551-4/1551-5/1551-6/1552/1552-0/1552-1/1552-3/1552-4/1552-5/1552-6, Side by Side (Shotgun)	2-20	7,700 each	130
Measurement and Signature Intelligence (MASINT)	2-21	10,300	90
Prophet, AN/MLQ-40 (V) 1	2-22	10,000	90

Nomenclature	*Paragraph Number*	*Max Weight (Pounds)*	*Evaluated Air Speed (Knots)*
Prophet, AN/MLQ-40 (V) 3	2-22	10,000	90
Prophet, Control Vehicle	2-22	10,000	90
CMTH, Shop Equipment (SE) on M1097	2-23	8,760	120
CMTH, Aviation Section (AS) on M1097	2-23	9,400	100
Remote Landing Site Tower	2-24	8,460	130
2 Mast, AETC Configuration	2-25	8,500	120
3 Mast, AETC Configuration	2-25	9,500	120
Secure Mobile Anti-Jam Tactical Terminal	2-26	8,450	120
Trojan Spirit Lite (V)2 Central Communications AN/TSQ-226 (V) 2 on M1113 HMMWV	2-27	11,500	130
Tactical Super High Frequency Satellite Terminal on M1113	2-28	10,340	120
Tactical Super Satellite Terminal Mobile Power Unit on M1113	2-29	10,520	120
AN/MRC-142B Radio Terminal Set with 30 M Mast on M998	2-30	7,500	120
MRC-127 Stacks (Two) on M998	2-31	8,010	120
LTACFIRE, Single Station	2-32	5,297	125
LTACFIRE, Dual Station	2-32	6,215	125
AN/TAQ-198 TTCS	2-32	6,015	100
System 2: CHS-2 AN/GYG-3(V)1, with SINGARS AN/VRC-90, AN/VRC-92 and EPLRS installed in the bed. AN/VRC-92 installed in cab.	2-33	8,103	100
System 3: CHS-2 AN/GYG-3(V)3, with SINGARS AN/VRC-90, AN/VRC-92 and EPLRS installed in the bed. AN/VRC-92 installed in cab.	2-33	8,366	100
System 4: 2 each AN/GYK-37(V)2, with SINGARS AN/VRC-89, AN/VRC-92 and EPLRS.	2-33	7,790	100
AN/TPQ-36 Firefinder Generator Pallet	2-34	7,700	110
Man Portable Air Defense Systems on M998	2-35	7,700	125
AN/TPQ-42 Meteorological Hydrogen Generator	2-36	10,000	120
Compressed Air-Foam System, Mobile on M1037	2-37	6,400	130
Petroleum Quality Analysis System Shelter on M1113	2-38	9,640	110
M1123 Cargo/Troop Carrier with MAK Fully Armored Troop Section	2-39	10,300	110
Interim Fast Attack Vehicle Truck, Long Wheel Base	2-40	5,720	120
Interim Fast Attack Vehicle Truck, Long Wheel Base, Side by Side	2-41	11,440	120
Medium Tactical Vehicle, Cargo, M1083	2-42	23,200	110
Medium Tactical Vehicle, Cargo, M1083A1	2-42	23,200	110
Medium Tactical Vehicle, Cargo, M1083	2-42	28,000	110

Nomenclature	*Paragraph Number*	*Max Weight (Pounds)*	*Evaluated Air Speed (Knots)*
Medium Tactical Vehicle, Cargo, M1083A1	2-42	28,000	110
Medium Tactical Vehicle, Cargo, with Material Handling Equipment, M1084	2-42	28,000	110
Medium Tactical Vehicle, Cargo, Longbed, M1085	2-42	28,000	110
Medium Tactical Vehicle, Cargo, Longbed, with Material Handling Equipment, M1086	2-42	28,000	110
Medium Tactical Vehicle, Dump Truck, M1090	2-42	22,100	110
Medium Tactical Vehicle, Dump Truck, M1090A1	2-42	23,200	110
Medium Tactical Vehicle, Dump Truck, M1090	2-42	22,100	110
Medium Tactical Vehicle, Dump Truck, M1090A1	2-42	24,817	110
Medium Tactical Vehicle, Cargo, Airdrop Variant, M1093	2-42	23,200	110
Medium Tactical Vehicle, Dump Truck, Airdrop Variant, M1094	2-42	22,770	110
Light Medium Tactical Vehicle, Cargo, M1078	2-43	23,200	110
Light Medium Tactical Vehicle, Cargo, M1078A1	2-43	23,200	110
Light Medium Tactical Vehicle, Shop Van, M1079A1	2-43	23,200	110
Light Medium Tactical Vehicle, Cargo, M1081	2-43	23,200	110
Type III Cargo Bed Cover (Deployed or Stowed) on Light Medium Tactical Vehicle, Cargo, M1078/M1078A1/M1081	2-44	23,200	110
Type IV Cargo Bed Cover (Deployed or Stowed) on Medium Tactical Vehicle, Cargo, M1083/M1083A1/M1093	2-44	23,200	110
Medium Tactical Vehicle, Tractor, M1088/M1088A1	2-45	19,740	110
Truck, Cargo, 5-Ton, w/wo Winch, M813A1	2-46	21,120	110
Truck, Cargo, 5-Ton, wo Winch, M923	2-46	22,175	110
Truck, Cargo, 5-Ton, with Winch, M925	2-46	23,275	110
Truck, 2 1/2-Ton, Modified, M35A2	2-47	10,900	130
Truck, 2 1/2-Ton, M35A2	2-48	18,900	90
Medium Tactical Vehicle Replacement	2-49	27,800	100
Front Power Unit, MK48	2-50	26,000	110
Command and Control TAMCN E0946	2-51	27,060	135
25-MM, TAMCN E0947	2-51	28,200	130
Logistics, TAMCN E0948	2-51	28,200	135
Mortar, TAMCN E0949	2-51	27,400	130
Recovery Unit, TAMCN E0950	2-51	23,400	135
Tow Anti-Tank, TAMCN E0942	2-51	27,650	130
Mobile Electronic Warfare Support System-Product Improvement Program (MEWSS-PIP)	2-51	29,480	130
M101A2 with Accompanying Load	3-2	3,000	100

Nomenclature	*Paragraph Number*	*Max Weight (Pounds)*	*Evaluated Air Speed (Knots)*
Command Version 1 Trailer	3-2	1,958	100
Command Version 2 Trailer	3-2	1,981	100
Len Cable Trailer	3-2	2,796	100
NC Support Trailer	3-2	2,643	100
Maintenance Trailer #2	3-2	1,430	100
Battalion Spares Trailer #1	3-2	1,594	100
Battalion Spares Trailer #2	3-2	2,206	100
Downsized Direct Support Section Trailer	3-2	2,700	100
M1048 Trailer (TSS)	3-3	7,880	140
M989 HEMAT (Empty)	3-4	7,640	130
M989 HEMAT II	3-5	10,650	130
MK 14 Trailer, Container Hauler	3-6	16,000	120
MK 15 Trailer, Wrecker/Recovery	3-7	26,000	120
MK 16 Trailer, Fifth-Wheel Adapter	3-8	16,000	120
MK 17 Trailer, Drop Side, Cargo	3-9	23,000	120
M871A1 Semitrailer (Empty)	3-10	12,240	80
High Mobility Trailer (Light), M1101	3-11	3,400	120
High Mobility Trailer (Heavy), M1102	3-11	4,200	120
Tactical Messaging System (TMS), Cargo Carrier, M1102	3-11	4,200	120
Mission Trailer without Transit Cases	3-12	3,960	90
Support Trailer without Transit Cases	3-12	3,878	90
AN/TSQ-198 Tactical Terminal Control System	3-13	2,720	120
Environmental Control Unit (ECU) on COPS Trailer	3-14	4,080	120
Non- ECU on COPS Trailer	3-14	3,145	120
Deployable Print Production Center on COPS Trailer	3-15	4,400	CH-47 / 80 CH-53 / 110
M1112 400 Gallon Water Trailer (Empty)	3-16	3,860	130
M105A3 Trailer (Empty)	3-17	2,600	120
M105A3 Trailer (Loaded)	3-17	5,580	120
M1082 LMTV Trailer	3-18	11,510	120
M1095 MTV Trailer	3-18	15,780	70
Assault Command Post (ACP) Housed in Expandable Light airmobile Shelter (ELAMS), with High Mobility Wheel Set	3-19	13,240	100
Upgraded Assault Command Post (ACP) Housed in Expandable Light airmobile Shelter (ELAMS), with High Mobility Wheel Set	3-19	14,600	100
Containerized Kitchen on Containerized Kitchen Trailer	3-20	20,840	120
M31 Expeditionary Arresting Gear System	3-21	17,466	100
Standard Automotive Tools Set Trailer	3-22	6,580	130

Nomenclature	*Paragraph Number*	*Max Weight (Pounds)*	*Evaluated Air Speed (Knots)*
Trailer, Two Axel, 20,000-Pound Capacity, SEE Transporter	3-23	10,880	110
Standard Automotive Tools Set with Core Tool Set	3-24	17,340	120
Standard Automotive Tools Set with Core and Mod 1 Tool Set	3-24	19,240	120
Standard Automotive Tools Set with Core, Mod 1, and Mod 2 Tool Sets	3-24	19,968	120
PU-751/M, 5kW, Generator Variants: LOS V1/V2/V3/V4 Planning Trailer Radio Access Trailer	4-2	3,000	75
PU-753/M, 10kW, Generator Variants: NC OPS Trailer SCC TECH Trailer NC MGMT Trailer LEN MGMT Trailer LEN OPS Trailer SEN V1 Trailer SEN V2 Trailer Maintenance #1 Trailer AN/TSQ-182	4-2	3,000	75
M353 Trailer Chassis	4-3	2,720	120
MEP-005-A	4-3	6,220	120
MEP-006-A	4-3	7,720	120
MEP-114-A	4-3	6,220	120
MEP-115-A	4-3	6,320	120
PU-405 A/M Power Unit, 15kW, with Acoustic Suppression Kit (ASK)	4-4	6,740	80
PU-406 B/M Power Unit, 30kW, with Acoustic Suppression Kit (ASK)	4-4	7,250	80
PU-806, 60 kW, 400 Hz Power Unit with MEP816A, 60kW, 400Hz, Generator Set	4-4	7,250	80
AN/MJQ-35A, 5kW, 69Hz, Power Plant	4-5	3,540	120
Aviation Ground Power Unit	4-6	4,190	100
Truck, 1 ¼-Ton, HMMWV, M998, Empty	5-2	5,200	100
Truck, 1 ¼-Ton, HMMWV, M998, Loaded	5-2	7,700	110
Truck, 1 ¼-Ton, HMMWV, M1038, Empty	5-2	5,327	100
Truck, 1 ¼-Ton, HMMWV, M1038, Loaded	5-2	7,700	110
Trailer, Cargo, M101A1/M101A2, Empty	5-2	1,280	100
Trailer, Cargo, M101A1/M101A2, Loaded	5-2	2,780	110
M1037 NC Support Vehicle	5-3	8,227	110
M1037 LEN Cable Vehicle	5-3	8,148	110

Nomenclature	*Paragraph Number*	*Max Weight (Pounds)*	*Evaluated Air Speed (Knots)*
M1037 with SCC Command V1 S-250 Shelter	5-3	8,346	110
M1037 with SCC Command V2 S-250 Shelter	5-3	8,346	110
M1037 with Management 2 S-250 Shelter	5-3	7,905	110
NC Support M101A2, Trailer	5-3	2,643	110
LEN Cable Vehicle M101A2, Trailer	5-3	2,796	110
SSC Command V1 M101A2 Trailer	5-3	1,981	110
SSC Command V2 M101A2 Trailer	5-3	1,430	110
Management 2 M101A2 Trailer	5-3	1,430	110
M1037 with LOS (V1) S-250 Shelter and PU-751/M Generator	5-4	M1037-8,246 PU-751-2,772	110
M1037 with LOS (V2) S-250 Shelter and PU-751/M Generator	5-4	M1037-7,851 PU-751-2,776	110
M1037 with NC LOS (V3) S-250 Shelter and PU-751/M Generator	5-4	M1037-8,225 PU-751-2,772	110
M1037 with LEN LOS (V4) S-250 Shelter and PU-751/M Generator	5-4	M1037-8,125 PU-751-2,772	110
M1037 with SCC Planning S-250E Shelter and PU-751/M Generator	5-4	M1037-8,003 PU-751-2,531	110
M1037 with Radio AccessoriesS-250 Shelter and PU-751/M Generator	5-4	M1037-8,226 PU-751-2,751	110
M1037 with SEN (V1) S-250E Shelter and PU-753/M Generator	5-4	M1037-8,231 PU-753-2,759	110
M1037 with SEN (V2) S-250E Shelter and PU-753/M Generator	5-4	M1037-8,354 PU-753-2,759	110
M1037 with Maintenance 1 S-250 Shelter and PU-753/M Generator	5-4	M1037-8,084 PU-753-2,680	110
M1037 with NC Operations S-250E Shelter and PU-753/M Generator	5-4	M1037-8,222 PU-753-2,681	110
M1037 with NC Management S-250E Shelter and PU-753/M Generator	5-4	M1037-7,921 PU-753-2,681	110
M1037 with LEN Operations S-250E Shelter and PU-753/M Generator	5-4	M1037-8,309 PU-753-2,759	110
M1037 with LEN Management S-250E Shelter and PU-753/M Generator	5-4	M1037-8,288 PU-753-2,681	110
M1037 with SCC Technical S-250E Shelter and PU-753/M Generator	5-4	M1037-8,075 PU-753-2,681	110
M1037 S-250 Shelter and PU-625/G Generator	5-4	M1037-8,800 PU-625-2,000	110
Truck, 1 ¼-Ton, HMMWV, M998/M1038	5-5	7,000	120
G-85/TPQ-36 (V) 7 Generator Trailer Group	5-5	3,475	120
Truck, Utility1 ¼-Ton, HMMWV, M1097 with Pallet Group OA-9134/TSC, Antenna AS-3036/TSC	5-6	7,120	110
PU-753 Generator Set on M116A2 Trailer	5-6	3,000	110

Nomenclature	*Paragraph Number*	*Max Weight (Pounds)*	*Evaluated Air Speed (Knots)*
Truck, Shelter Carrier, 1 ¼-Ton, M1097 with OKG-398/TPW, Operations Control Group (S-250 Shelter)	5-7	8,500	120
Radar Set Antenna, AN/TPQ-36 (V) 7 on M116A2 Trailer	5-7	2,975	120
Truck, Utility, 1 ¼-Ton, M1097 with Generator Pallet Group, G-86-TPQ-36 (V) 7	5-8	7,400	120
Radar Set Antenna, AN/TPQ-36 (V) 7 on M116A2 Trailer	5-8	2,975	120
Truck, 1 ¼-Ton, M1037 with AN/TPQ-36, S-250 Shelter	5-9	8,800	110
Antenna, Radar, AN/TPQ-36 Mounted on M103A1 Trailer	5-9	4,100	110
Truck, 1 ¼-Ton, M1097 with AN/TSC-93A, S-250 Shelter	5-10	9,769	110
Pu-753 Generator Set on M116A2 Trailer	5-10	3,000	110
Truck, 1 ¼-Ton, M1097 with S-250 Shelter, LOS (V1)	5-10	9,038	120
Truck, 1 ¼-Ton, M1097 with S-250 Shelter, LOS (V2)	5-10	9,038	120
Truck, 1 ¼-Ton, M1097 with S-250 Shelter, LOS (V3)	5-10	9,038	120
Truck, 1 ¼-Ton, M1097 with S-250 Shelter, LOS (V4)	5-10	9,038	120
PU-751 Generator Set on M116A2 Trailer	5-10	3,062	120
Truck, 1 ¼-Ton, M1097 with AN/TSQ-183 Counter Battery Radar	5-11	8,500	120
MEP802A Generator on M116A3 Trailer	5-11	1,580	120
Truck, 1 ¼-Ton, M1097 with AN/TSQ-183 Counter Battery Radar	5-12	8,500	120
M101A2 Trailer	5-12	2,300	120
JSTAR Mission Vehicle, M1097 with LMS Shelter	5-13	9,530	120
JSTAR Mission Trailer, HMT with Generator Set	5-13	3,960	120
Truck, Shelter Carrier, M1097 with OKG-398/TPW, Operations Control Group, (S-250 Shelter)	5-14	8,500	120
Equipment Trailer Group, M116A2	5-14	2,300	120
System 2: CHS-2 AN/GYG-3 (V)1, with SINGARS AN/VRC-90, AN/VRC-92 and EPLRS Installed in Bed. AN/VRC-92 Installed in Cab.	5-15	8,103	120
System 3: CHS-2 AN/GYG-3 (V)3, with SINGARS AN/VRC-90, AN/VRC-92 and EPLRS Installed in Bed. AN/VRC-92 Installed in Cab.	5-15	8,366	120
System 4: 2 each AN/GYK-37 (V)2, with SINGARS AN/VRC-89, AN/VRC-92 and EPLRS	5-15	7,790	120
Trailer, M101A1	5-15	3,200	120

Nomenclature	*Paragraph Number*	*Max Weight (Pounds)*	*Evaluated Air Speed (Knots)*
Shadow Tactical Unmanned Aerial Vehicle (TUAV) Troop Carrier	5-16	7,085	100
Shadow Tactical Unmanned Aerial Vehicle (TUAV) Equipment Trailer	5-16	3,950	100
M1097 Truck, Utility, 1 ¼-Ton, ISYSCOM Radio Vehicle	5-16	10,180	120
M1102 HMT	5-16	3,260	120
Shadow Tactical Unmanned Aerial Vehicle (TUAV) Maintenance Section Multifunctional (MSM)	5-17	9,774	100
Shadow Tactical Unmanned Aerial Vehicle (TUAV) Equipment Maintenance Section Multifunctional (MSM) Trailer	5-17	3,737	100
Trojan Spirit Lite (V)2 Central Communications, AN/TSQ-226 on M1113 HMMWV	5-18	10,180	120
M1102 Trailer, Cargo, Trojan Sprit Lite (V)2	5-18	3,260	120
CGS JSTAR Support Vehicle, M1097 HMMWV	5-19	5,600	135
M1102 Trailer (Modified), CGS JSTAR Support Trailer	5-19	3,652	135
M1097 HMMWV with AN/MPQ-64 TQG	5-20	7,800	100
HMT with Sentinel ATG with Spreader Bar Modification	5-20	3,900	100
Truck, ! ¼-Ton, HMMWV M1097	5-21	7,400	120
G-85/TPQ-36 Generator Trailer Group	5-21	3,075	120
M1113 Shelter Carrier, HMMWV, with Digital Topographic Support System-Light (DTSS-L), AN/TYQ-67 (V)1	5-22	10,100	70
M1113 Shelter Carrier, HMMWV, with Integrated System Control (ISYSCOM) (V)1, (V)2	5-22	9,982	70
PU-798 Generator on M116A3 Trailer	5-22	2,457	70
Analysis Control Team-Enclave, AN/TYQ-103 on M1097A2	5-23	9,960	130
PU-798 Generator on M116A3 Trailer	5-23	2,600	130
Analysis Control Team-Enclave, AN/TYQ-103 on M1113	5-24	11,500	130
PU-798 Generator on M116A3 Trailer	5-24	2,600	130
Truck, (HMMWV) M1097A2 with LOS (V1) in S-250 Shelter	5-25	8,246	110
Truck, (HMMWV) M1097A2 with Small Extension Node Switch, AN/TTC-48E (V)2	5-25	8,354	110
PU-797 Generator Set on M116A3 Trailer	5-25	2,320	110
PU-798 Generator Set on M116A3 Trailer	5-25	2,457	110
Meteorological Measuring Set, AN/TMQ-41 in LMS on M1097	5-26	8,200	100

Nomenclature	*Paragraph Number*	*Max Weight (Pounds)*	*Evaluated Air Speed (Knots)*
AN/MJQ-35 Power Plant with two (2) MEP-802A, 5kW, 60 Hz Generator Sets on M116A3 Trailer	5-26	3,737	100
Shadow Tactical Unmanned Aerial Vehicle, Air Vehicle Transport	5-27	10,320	100
Shadow Tactical Unmanned Aerial Vehicle, Launch/Recovery Trailer	5-27	3,737	100
Truck, Cargo, 1 ¼-Ton, M998/M1038 without Accompanying Load	5-28	7,700	90
Truck, Cargo, 1 ¼-Ton, M998/M1038 with Accompanying Load	5-28	7,700	90
Howitzer, M102, without Accompanying Load	5-28	3,160	90
Howitzer, M102, with Accompanying Load	5-28	3,160	90
Accompanying Load	5-28	2,860	90
Truck, Cargo, 1 ¼-Ton, 1097A1 and M102 Howitzer without Accompanying Load	5-28	HMMWV-7,840 M102-3,160	120
Truck, Cargo, 1 ¼-Ton, M1037/M1097	5-29	7,320	120
Howitzer, 105-mm, M119, (M1037 as Prime Mover)	5-29	4,160	120
Howitzer, 105-mm, M119, (M1097 as Prime Mover)	5-29	4,160	120
Truck, Cargo, 1 ¼-Ton, M1025A2 with LOSAT Reloader Crane	5-30	8,240	100
LOSAT Resupply Trailer (HMT) with 8 Missiles	5-30	4,100	100
Truck, Cargo, 1 ¼-Ton, M1113 with LOSAT Fire Unit	5-31	10,920	100
LOSAT Resupply Trailer (HMT) with 8 Missiles	5-31	4,100	100
M1113 with M56 Smoke Generator without Graphite in Tank	5-32	9,400	120
M101A2 Trailer	5-32	3,000	120
M1113 with PQAS Shelter	5-33	9,640	120
PQAS Trailer	5-3344	3,380	120
M101A1 Howitzer	6-2	4,980	95
M101A1 Howitzer with One A-22 Cargo Bag	6-2	7,180	75
M101A1 Howitzer with Two A-22 Cargo Bag	6-2	9,380	80
M101A1 Howitzer with Three A-22 Cargo Bag	6-2	11,580	75
Two M101A1 Howitzers, 105-mm, Side by Side	6-3	9,012	120
Howitzer, 105-mm, M102	6-4	3,330	130
Two Howitzers, 105-mm, M102	6-5	6,600	120
Two Howitzers, 105-mm, M102 with One A-22 Cargo Bag	6-5	8,800	120
Two Howitzers, 105-mm, M102 with Two A-22 Cargo Bags	6-5	11,000	120
Two Howitzers, 105-mm, M102 with Three A-22 Cargo Bags	6-5	13,200	120

Nomenclature	*Paragraph Number*	*Max Weight (Pounds)*	*Evaluated Air Speed (Knots)*
Two Howitzers, 105-mm, M119A2	6-6	9,400	120
M198 Howitzer, 155-mm, Towed with External Airlift Travel Lock Assembly	6-7	15,740	130
M777, 155-mm Lightweight Howitzer	6-8	9,300	120
M777A1, 155-mm Lightweight Howitzer	6-8	9,800	120
M777A2, 155-mm Lightweight Howitzer	6-8	9,920	120
Stinger, Pedestal-Mounted on M998, (Avenger)	7-2	8,513	120
Stinger, Pedestal-Mounted on M1097, (Avenger)	7-2	9,087	120
Stinger, Pedestal-Mounted wit ECU and PPU on M1097	7-3	9,800	90
Stinger, Pedestal-Mounted wit ECU and PPU on M1097A1	7-3	9,800	90
Stinger, Pedestal-Mounted wit ECU and PPU on M1097A2	7-3	10,300	90
M1113 Truck, 1 1/4-Ton with Line of Sight Anti-Tank Fire Unit with Reloader Crane and Four Missiles	7-4	10,920	80
M1097A2 Truck, 1 1/4-Ton with Complementary Low Altitude Weapons System without Missiles	7-5	10,300	120
M1097A2 Truck, 1 1/4-Ton with Complementary Low Altitude Weapons System with Two (2) Missiles Mounted on the Outside Rails	7-5	10,300	80
AN/MPQ-57 High Power Illuminator Radar on M390 Trailer, Phase II	7-6	9,480	110
AN/MPQ-61 High Power Illuminator Radar on M390 Trailer, Phase III	7-6	9,530	110
Platoon Support Van/Maintenance Center, M32	7-7	14,300	120
Platoon Support VanM934A1/A2	7-7	14,300	120
Field Maintenance Equipment Shop 20, Electromechanical Shop	7-8	5,312	120
Field Maintenance Equipment Shop 23, Maintenance Repair Facility	7-8	5,341	120
Field Maintenance Equipment Shop 21, Unmanned Shop, Electrical Equipment	7-9	5,639	120
Platoon Command Post, AN/MSW-20, Phase II, on M390C Trailer	7-10	10,244	125
Platoon Command Post, AN/MSW-20, Phase III, on M390C Trailer	7-10	9,300	125
Battery Command Post, AN/MSW-21, Phase III, on M390C Trailer	7-10	9,980	125
Tractor Dozer, D5B, Power Section	8-2	18,915	100
Tractor Dozer, D5B, Track Section	8-2	13,735	110
Tractor Full Tracked with Bucket, Case Model 1150	8-3	27,000	110
Tractor Full Tracked, Case Model 1150E	8-4	24062	75

Nomenclature	*Paragraph Number*	*Max Weight (Pounds)*	*Evaluated Air Speed (Knots)*
Tractor (Dozer), Full Tracked Type III JD 450G	8-5	18,300	100
Tractor (Dozer), Full Tracked Type III JD 450G without ROPS	8-5	17,700	100
Tractor (Dozer), Full Tracked Type III JD 450G without ROPS and Winch	8-5	16,160	100
IC45 Crawler Carrier	8-6	16,540	CH-47-130 CH-53-115
Tractor, Case Model 580	8-7	10,000	110
420-D Backhoe Loader	8-8	19,540 18,160	CH-47-130 CH-53-120
Small Emplacement Excavator	8-9	16,240	CH-47-100 CH-53-125
High Mobility Materiel Handler	8-10	15,650	110
950BS Scoop Loader, Work Section	8-11	15,830	120
950BS Scoop Loader, Power Section	8-11	16,110	120
130GS Grader, Front Section with Scarifier and ROPS and Low-Velocity Airdrop (LVAD) Suspension Provisions Removed	8-12	16,120	100
130 GS Grader, Rear Section	8-12	14,270	100
613BS Scraper, Elevating,	8-13	16,330	120
613WDS Water Distributor, Work Section	8-14	15,400	120
Roller, Towed, Vibrating	8-15	4,830	120
Roller, Towed, RO3402	8-16	4,600	120
Roller, Hercules, PT-11	8-16	3,520	105
Vibrating Roller, Caterpillar, RO-33	8-17	16,425	120
Roller, Compactor, Vibrator	8-18	24,340	80
MK155 Launcher with M68A2 Demolition Charge and MK22 Rocket Motor on M353 Trailer	8-19	6,372	140
MK155 Launcher with M68A2 Demolition Charge and MK22 Rocket Motor on M200A1 Trailer	8-20	6,002	120
LRT-110, 7 ½-Ton Crane	8-21	24,230	120
LRT-110, 7 ½-Ton Crane Boom	8-22	8,600	140
LRT-110, 7 ½-Ton Crane Power Unit	8-23	15,600	140
SP-7 Wheel-Mounted Crane (Pettibone)	8-24	27,640	100
Truck Forklift, MC-4000	8-25	8,600	120
Truck Forklift, RT-4000	8-26	10,860	120
Truck Forklift, MC-6000	8-27	19,800	130
Extendable Boom Forklift	8-28	25,640	120
Extendable Boom Forklift (EBFL) (New Version)	8-29	28,400	120
Light Rough Terrain Forklift (LRTF)	8-30	13,700	120
Boat, Bridge, Erection	8-31	6,000	30
Ribbon Bridge Erection Boat, MK2	8-32	9.040	CH-47-130 CH-53-70

Nomenclature	*Paragraph Number*	*Max Weight (Pounds)*	*Evaluated Air Speed (Knots)*
Ribbon Bridge, Interior Bay	8-33	11,800	CH-47-130 CH-53-100
Ribbon Bridge, Interior Bay, Improved	8-33	13,860	CH-47-130 CH-53-100
Ribbon Bridge, Ramp Bay	8-34	11,560	CH-47-130 CH-53-70
Ribbon Bridge, Ramp Bay, Improved	8-34	13,270	CH-47-130 CH-53-70
Medium Girder Bridge, Five Bay, Double Story, One End, Undecked, with Building Frame and Launching Nose	8-35	18,240	80
Dry Support Bridge Flatrack LVT (Launch Beams and Basket)	8-36	13,800	135
Dry Support Bridge Flatrack T1 (Ramp Module, Approach Ramp, and End Beam	8-36	19,300	110
Dry Support Bridge Flatrack T2 (Two Parallel Modules)	8-36	23,050	100
Dry Support Bridge Flatrack V1 (Parallel Module and Ramp Module)	8-36	22,500	100
Dry Support Bridge Flatrack V2 (Two Parallel Modules)	8-36	23,050	100
SRS-106 Integrated Tower Systems Portable Tower Trailer	8-37	10,000	145
M4 Robotic Mine Flail	8-38	12,440	120
Pneumatic tool and Compressor, TAMCN B0395	8-39	8,040	120
Hydraulic Pioneer and Tool Outfit	8-39	6,740	110
Water Purification Unit, Reverse Osmosis, MC 257, 600 gph, Skid Mounted	8-40	7,400	90
Water Purification Unit, Reverse Osmosis, 600 gph, Trailer Mounted	8-41	17,800	100
Inland Petroleum Distribution System, Mainline Pump on 20-Foot Flatrack	8-42	19,500	125
Two Sixcon Storage Modules, Fuel/Water, TAMCN B2085/B2086 (Empty), Side by Side	9-2	5,500	120
Two Sixcon Storage Modules, Fuel/Water, TAMCN B2085/B2086 (Full), Side by Side	9-2	20,100	120
One Sixcon, Storage Module, Fuel/Water, TAMCN B2085/B2086 (Empty) and One Sixcon Pump Module, Fuel/Water, TAMCN B1580/B1581, Side by Side	9-2	5,100	120
Two Sixcon Pump Modules, Fuel/Water, TAMCN B1580/B1581, Side by Side	9-2	4,700	120
Three Sixcon Storage Modules, Fuel/Water, TAMCN B2085/B2086 (Empty), Side by Side	9-2	8,300	120
Two Full Sixcon Storage Modules, Fuel/Water, TAMCN B2085/B2086 and One Empty Sixcon Storage Module, Side by Side	9-3	22,900	120

Nomenclature	*Paragraph Number*	*Max Weight (Pounds)*	*Evaluated Air Speed (Knots)*
Two Empty Sixcon Storage Modules, Fuel/Water, TAMCN B2085/B2086 and One Full Sixcon Storage Module, Side by Side	9-3	15,600	120
Two Full Sixcon, Storage Modules, Fuel/Water, TAMCN B2085/B2086 and One Sixcon Pump Module, Fuel/Water, TAMCN B1580/B1581, Side by Side	9-3	22,500	120
Two Empty Sixcon, Storage Modules, Fuel/Water, TAMCN B2085/B2086 and One Sixcon Pump Module, Fuel/Water, TAMCN B1580/B1581, Side by Side	9-3	7,900	120
One Full Sixcon, Storage Modules, Fuel/Water, TAMCN B2085/B2086 and Two Sixcon Pump Modules, Fuel/Water, TAMCN B1580/B1581, Side by Side	9-3	14,800	120
One Empty Sixcon, Storage Modules, Fuel/Water, TAMCN B2085/B2086 and Two Sixcon Pump Modules, Fuel/Water, TAMCN B1580/B1581, Side by Side	9-3	7,500	120
Three Sixcon Pump Modules, Fuel/Water, TAMCN B1580/B1581, Side by Side	9-3	7,100	120
One Full and One Empty Sixcon, Storage Modules, Fuel/Water, TAMCN B2085/B2086 and One Sixcon Pump Module, Fuel/Water, TAMCN B1580/B1581, Side by Side	9-3	15,200	120
Five 500-Gallon Fuel Drums	9-4	18,825	100
Load Handling System-Compatible Water Tank Rack System	9-5	9,200	135
Satellite Communications Shelter, AN/TSC-93B (V) 1 or (V) 2	10-2	3,250	100
Operations Control Group, AN/TPQ-36 Firefinder, Block II	10-2	2,200	90
Operations Central Shelter, Firefinder, AN/TPQ-36 (V) 8, S-788	10-3	2,869	80
Biological Agent, Automatic, Integrated Detection System, s-788	10-3	3,300	100
Downsized Direct Support Section, Standard Integrated Command Post Systems, S-787/S-788	10-3	2,400	70
Multiplexer Terminal Set, AN/TSQ-146(V)	10-4	6,190	120
Battery Servicing Shelter, AN/TSM-133	10-4	5,420	130
Repeater Set, Radio, AN/TRC-138A	10-4	4,720	80
Radio Terminal Set, AN/TRC-173	10-4	3,790	80
Repeater Set, Radio, AN/TRC-174	10-4	4,100	80
Radio Terminal Set, AN/TRC-175	10-4	4,690	80
Regency Net Force Terminal, AN/TRC-179(V)1	10-4	8,200	110
Meteorological Data System (MDS)	10-4	4,750	130

Nomenclature	*Paragraph Number*	*Max Weight (Pounds)*	*Evaluated Air Speed (Knots)*
Position Location Reporting System Master Station, AN/TSQ-129	10-4	6,050	100
Enhanced Position Location Reporting System, Net Control Station, AN/TSQ-158	10-4	6,289	100
Tactical Satellite Communications Terminal, AN/TSC-85B	10-4	6,200	100
IFTE Base Shop Test Facility, (BSTF), Basic, S-280C/G, AN/TSM-191(V)3	10-4	7,806	120
IFTE Base Shop Test Facility, (BSTF), HAWK, S-280C/G, AN/TSM-191(V)2	10-4	7,748	120
IFTE 60 Hz Storage Shelter, S-280C/G, S-744/TSM-191V	10-4	6,365	110
IFTE 400 Hz Storage Shelter, S-280C/G, S-175/TSM-191V	10-4	5,119	110
Communications Nodal Control Element (CNCE), AN/TSQ-111	10-4	10,000	120
Airborne Reconnaissance Low-Imagery (ARL-I), and Airborne Reconnaissance Low-Comint (ARL-C), Fly Away Kits, Types A1/B1/C1	10-4	8,500	80
Joint Stars MGSM LRIP Shelter System, OA-9408/TSQ-168(V)1	10-4	8,700	100
E0145 Bottle Cleaning and Charging Station	10-4	6,400	70
E1022 Maintenance Facility Night Sight	10-4	6,400	70
Central Office, Telephone, Automatic, AN/TTC-42(V)	10-4	5,700	60
Airborne Mobile Direct Air Support Central (DASC), AN/UYQ-3A	10-4	5,600	60
AN/TYA-16B	10-4	3,325	60
EMI, TAMCN C6110	10-5	7,700	50
Electronic EMI HSOP Shelter	10-5	4,140	50
Air Radar Shelter, AN/TPS-73	10-5	14,500	50
Air Radar Shelter, AN/TPS-63B	10-5	7,360	70
Rigid EMD Communications Shelter	10-5	7,000	50
Communications Central, ANTGC37	10-6	16,733	80
Rigid Shelter, General Purpose, TAMCN C6122	10-6	15,000	75
Electromechanical Induction (EMI)	10-6	15,000	70
Tactical Air Operations Module (TAOM), AN/TYQ-23	10-6	16,175	100
Tactical Air Operations Module (TAOM), AN/TYQ-23, Up Graded	10-6	15,187	100
Maintenance Repair Group Shelter, AN/TSM-170	10-6	10,900	90
Radar Surveillance Center, AN/TSQ-107	10-6	9,950	70
Control and Communications Shelter, AN/TSQ-131	10-6	14,050	80

Nomenclature	*Paragraph Number*	*Max Weight (Pounds)*	*Evaluated Air Speed (Knots)*
Non-Divisional AVIM Shop, Machine/ Welding Shop	10-6	Min-11,000 Max-13,200	120
Non-Divisional AVIM Shop, Pneudraulics Shop	10-6	Min-11,000 Max-13,200	120
Non-Divisional AVIM Shop, Power Train Shop	10-6	Min-11,000 Max-13,200	120
Non-Divisional AVIM Shop, Engine Shop	10-6	Min11,000 Max13,200	120
Non-Divisional AVIM Shop, Sheet Metal/Paint Shop	10-6	Min11,000 Max13,200	120
Non-Divisional AVIM Shop, Tool Crib Shop	10-6	Min11,000 Max13,200	120
Non-Divisional AVIM Shop, Propeller/Rotor Shop	10-6	Min11,000 Max13,200	120
Non-Divisional AVIM Shop, Electrical/Instrument Shop	10-6	Min11,000 Max13,200	120
Non-Divisional AVIM Shop, Production/Quality Control Shop	10-6	Min11,000 Max13,200	120
AN/TSQ-108A(V)2	10-6	13,050	80
Improved Direct Air Support Center	10-6	10,000	70
Shop Set, Maintenance Facility Night Sight, E1713	10-6	8,400	80
Shop Set, Maintenance Artillery, E1712	10-6	8,400	80
Shop Set, Maintenance Small Arms, E1714	10-6	8,400	
Trojan Transportable Mini-Switch (TTMS) ISO Shelter	10-6	14,700	80
EMI, EMC, S717T, Communications, TAMCN A2336	10-6	6,400	75
Non-Expandable Communications, TAMCN A2337	10-6	10,000	80
Tactical Reconnaissance Processing Evaluation System (TERPES)	10-6	13,200	80
Trojan Air Transportable Electronic Reconnaissance System (TATERS), SCINS Communications Subsystem Shelter	10-6	13,320	110
Trojan Air Transportable Electronic Reconnaissance System (TATERS), TOTS Nonexpandable Shelter	10-6	10,720	60
Trojan Air Transportable Electronic Reconnaissance System (TATERS), CHIPS Receiver Group Shelter	10-6	14,220	90
Trojan Air Transportable Electronic Reconnaissance System (TATERS), PEELS Electric Power Plant Shelter	10-6	15,100	80
Containerized Shower (CS)	10-6	10,070	60
Standard Automotive Tools Set (SATS) with Core Tool Set	10-6	10,760	110

Nomenclature	*Paragraph Number*	*Max Weight (Pounds)*	*Evaluated Air Speed (Knots)*
Standard Automotive Tools Set with Core and Mod 1 Tool Set	10-6	12,660	110
Standard Automotive Tools Set with Core and Mod 1 and Mod 2 Tool Sets	10-6	13,420	110
AN/TYC-5A Data Communications Terminal	10-7	7,451	50
Shelter, Knockdown, 8- x 8- x 20-Foot	10-8	3,800	110
Jam-Resistant Secure Communications Satellite Communications Terminal with Mobilizer	10-9	20,730	60
AN/TRC-173A	10-10	3,500	100
AN/TRC-174A	10-10	3,425	100
AN/TRC-175A	10-10	3,350	100
AN/TRC-138B	10-10	3,525	100
AN/TRC-138C	10-10	3,430	100
NATO Airbase Satcom Shelter Pallet, AN/TSC-93B (V) 2	10-11	5,751	130
Trojan Air Transportable Electronic Reconnaissance System High Gain Antenna Group Shelter	10-12	12,750	60
Digital Tech Controller Housed in a Modified Gitchner Shelter	10-13	9,100	90
Full-Up Power Pack (FUPP) Container, M1A1, Metal or Fiberglass	11-2	13,620	120
Two (2) ISU-90 Shipping/Storage Containers, Tandem	11-3	7,500-Each 15,000-Total	90
Authorized Stockage List Mobility System FPU-12 (12-Foot Section Only)	11-4	20,000	110
Authorized Stockage List Mobility System FPU-8/12 (8- & 12-Foot Sections Connected)	11-5	25,000 26,000	130
Three Quadcons (3), Empty	11-6	5,292	100
Three Quadcons (3), Loaded	11-6	16,000	110
Four Quadcons (4), Empty	11-6	7,056	130
Four Quadcons (4), Loaded	11-6	16,000	130
Multiple Launch Rocket System with Two Rocket Pods/Containers, (with Six Rockets)	11-7	10,010	110
Two Enclosure Assembly Launch Pods, Guided Missile Launch Assembly	11-7	10,222	110
Multiple Launch Rocket System with Four Enclosure Assembly Launch Pods	11-8	20,020	120
Guided Missile Launch Assembly with Four Enclosure Assembly Launch Pods	11-8	20,444	120
Antenna, Satellite, Quick Reaction, (QRSA), OE-361/G	12-2	4,830	110
NATO Air Base SATCOM Power Pallet, AN/TSC-85B (V)2	12-3	8,630	120

Nomenclature	*Paragraph Number*	*Max Weight (Pounds)*	*Evaluated Air Speed (Knots)*
AN/TSC-93B Satellite Communications Terminal without ALTA	12-4	3,644	120
AN/TSC-93B Satellite Communications Terminal with ALTA	12-4	3,957	120
Palletized Loading System, M1077 Flatrack, Loaded	13-2	Min-6,500 Max-20,000	120
Two M1077 Flatracks, Empty, Stacked	13-3	6,500	120
Three M1077 Flatracks, Empty, Stacked	13-3	9,750	120
Enhanced Palletized Loading System, Flatrack, Loaded	13-4	Min-10,500 Max-22,000	80
One Enhanced, Flatrack, Empty	13-5	7,400	80
Two Enhanced, Flatracks, Empty, Stacked	13-5	14,800	80
Container Roll-In/Out Platform, Loaded	13-6	Min-6,500 Max-20,000	120
Two Through Five Container Roll-In/Out Platform, Empty, Stacked	13-7	Min-7,300 Max-20,000	130
Naval Special Warfare Rigid Inflatable Boat without Trailer	13-8	15,070-18,230	70
Naval Special Warfare Rigid Inflatable Boat with Trailer	13-8	19,240-22,400	70
Naval Special Warfare Rigid Inflatable Boat Trailer	13-9	3,716	80
Special Operations Craft-Riverine Trailer	13-9	4,300	80
Special Operations Craft-Riverine	13-10	20,400	100
Special Operations Craft-Riverine with SOC-R Trailer	13-11	24,000	100
35-Foot Riverine Assault Craft	13-12	13,800	70
35-Foot Riverine Assault Craft with Trailer	13-12	15,800	110
Small Unit Riverine Craft with Trailer	13-13	20,400	50
M35A1/A2 2 ½-Ton Cargo Truck	14-2	13,180	90
Water Trailer, M149/M149A1	14-3	Min-2,540 Max-6,060	60
Water Trailer, M149/M149A2	14-3	Min-2,800 Max-6,320	60
M114A1 155-mm Howitzer	14-4	12,660	90
One Conex Container	14-5	1,578	60
One MILVAN Container	14-6	4,710	60

This page intentionally left blank.

Glossary

ACP	assault command post
AETC	auxiliary equipment transportation container
AFATADS	advanced field artillery tactical data systems
AL	Alabama
ARL-C	airborne reconnaissance low-comint
ARL-I	airborne reconnaissance low-imagery
ARTS	all-purpose remote transport system
ASLMS	autorized stockage list mobility system
AS	aviation section
ASK	acoustic suppression kit
ATG	antenna transceiver group
ATTN	attention
AVT	air vehicle transport
BCP	battery command post
bn	battalion
BSTF	base shop test facility
CAFSM	compressed air foam system, mobile
CBC	cargo bed cover
CGS	common ground station
CHIPS	command hardware intelligence processing subsystem
CLAWS	complementary low altitude weapons system
CMTH	contact maintenance truck, heavy
CNCE	communications nodal control element
CONEX	container express
COPS	crash-out-package system
CROP	container roll-in/out platform
CS	containerized shower
CWTRS	compatible water tank rack system
DA	Department of the Army
DASC	direct air support central
DAMP	digital antenna mast program
DC	District of Columbia
DPPC	deployable print production center
DTC	digital tech controller
DTSS-L	digital topographic support system-light
EAGS	expeditionary arresting gear system
EALP	enclosure assembly launch pods
EBFL	extendable boom forklift

ECU	environmental control unit
ELAMS	expandable light airmobile shelter
EMI	electromechanical induction
EPLRS	enhanced position location reporting system
FAAR	forward area alerting radar
FL	Florida
FME	field maintenance equipment
FOPS	falling objects protection system
FUPP	full-up power pack
GCS	ground control station
GMLA	guided missile launch assembly
GPH	gallons per hour
GPM	gallons per minute
GVW	gross vehicle weight
HEMAT	heavy expanded mobility ammunition trailer
HGAG	high gain antenna group
H-HMMWV	heavy high-mobility multipurpose wheeled vehicle
HIPIR	high power illuminator radar
HMD	high mobility downsized
HMDA	high mobility digital group multiplexer assemblage
HMMH	high mobility materiel handler
HMMWV	high-mobility multipurpose wheeled vehicle
HMT	high mobility trailers
HQ	headquarters
HSTRU	hydraulic system test and repair unit
HZ	Hertz
IAS	intelligence analysis system
IEW	intelligence and electronic warfare
IFAV	interim fast attack vehicle
IMETS	integrated meteorological systems
ISO	International Organization of Standardization
IPDS	inland petroleum distribution system
ISYSCON	integrated system control
JRSC	jam-resistant secure communication
JSTAR	joint surveillance target attack radar
JTIDS	joint tactical information distribution system
KW	kilowatt(s)
LAV	light armored vehicle
lbs	pounds
LHS	load handling system
LIN	line number

LMS	lightweight multipurpose shelter
LMTV	light medium tactical vehicle
LOSAT	line of sight anti-tank
LRTF	light rough terrain forklift
LTACFIRE	lightweight tactical fire control system
LVAD	low velocity airdrop
MAK	Marine armor kit
MANPADS	man portable air defense system
MASINT	measurements and signature intelligence
MDS	meteorological data system
MEWSS-PIP	mobile electronic warfare support system-product improvement program
MGB	medium girder bridge
MHG	meterological hydrogen generator
MICLIC	mine clearing line charge
MIL STD	military standard
MLRS	multiple launch rocket system
mm	millimeter
MPU	mobile power unit
MR	mobile radio
MRBS	mobile radio broadcasting subsystem
MSFDCS	multiservice flight data collection sheet
MSM	maintenance section multifunctional
MT	mobile television
MTBS	mobile television broadcasting subsystem
MTL	multi-terrain loader
MTV	medium tactical vehicle
MTVR	medium tactical vehicle replacement
NABS	NATO airbase satcom
NATO	North Atlantic Treaty Organization
NAVAIR	Naval Air Systems Command
NCS-E(D)	downsized net control system
NJ	New Jersey
NSC	Natick Soldier Center
NSN	national stock number
NSWRIB	naval special warfare rigid inflatable boat
OC	operations central
OCG	operational control group
PCP	platoon command post
PEELS	primary electrical equipment life support
PLS	palletized loading system
PN	part number

POC	platoon operations center
PPU	primary power unit
PSV/MC	platoon support van/maintenance center
PQAS	petroleum quality analysis system
PTO	pioneer tool outfit
PTT	portable tower trailer
QM	quartermaster
QRSA	quick reaction satellite antenna
RAC	riverine assault craft
RI	Rhode Island
RIE	required individual equipment
RLST	remote landing site tower
ROPS	roll-over protection system
ROWPU	reverse osmosis water purification unit
RP/C	rocket pod/container
RT	rough terrain
SATS	standard automotive tool set
SCINS	satellite communications intesat nodal subsytem
SDDCTEA	Surface Deployment and Distribution Command Transportation Engineering Agency
SE	shop equipment
SEE	small emplacement excavator
SHF	super high frequency
SICPS	standardized integrated command post systems
SIU	sensor interface unit
SIXCON	six-compartment container
SMART-T	secure mobile anti-jam tactical terminal
SMMS	sensor mobile monitoring system
SOC-R	special operation craft-riverine
SOMS	special operations media system
SSS	single shelter switch
STIK	soft top installation kit
SURC	small unit riverine craft
TAMCN	Table of Authorized Material Control Number
TAOM	tactical air operations module
TATERS	trojan air transportable electronics reconaissance system
TDN	tactical data network
TERPES	Tactical electronic reconaissance processing evaluation system
TM	technical manual
TMS	tactical messaging system
TOTS	temporary occupancy troop shelter

TOW	tube launched, optically tracked, wire guided
TQG	tactical quiet generator
TRADOC	Training and Doctrine Command
TRSS	tactical remote sensor system
TSS	tracked suspension system
TTCS	tactical terminal control system
TTMS	trojan transportable miniswitch
TUAV	tactical unmanned vehicle
UMTE	unmanned threat emitter
US	United States
USA	United States Army
USMC	United States Marine Corps
VA	Virginia
W/WO	with/without

This page intentionally left blank.

References

AF Form 847 Recommendation for Change of Publication.

AFMAN 24-204(I) /TM 38-250. *Preparing Hazardous Materials for Military Air Shipments,* 15 April 2007.

DA Form 2028 Recommended Change to Publications and Blank Forms.

DA Form 7382-R Sling Load Inspection Record.

DA Forms are available on the APD web site (www.apd.army.mil).

FM 4-20.197/MCRP 4-11.3E, Vol I/NTTP 3-04.11/AFMAN 11-223(I), VOL I/COMDINST M13482.2B. *Multiservice Helicopter Sling Load: Basic Operations and Equipment,* 20 July 2006.

FM 10-450-4/AFJMAN 11-223, VOL II; COMDTINST M13482.3A; MCRP 4-23E, VOL II; NWP 3-04.12. *Multiservice Helicopter Sling Load: Single-Point Load Rigging Procedures,* 30 May 1998.

MIL-STD-913A. *Requirements for the Certification of Sling Loaded Military Equipment for External Transportation by Department of Defense Helicopters*, 3 February 1997.

TM 9-2320-285-24P. *Unit, Direct Support, and General Support Maintenance Repair Parts and Special Tools Lists, Truck Tractor, Yard-type: 43,500 GVW, DED, 4 x 2 Army Model M878A1 (Ottawa Model 50) (NSN 2320-01-121-2102),* 5 June 1992.

TM 9-1015-252-10. *Operator's Manual for Howitzer, Light, Towed: 105-MM, M119A2 (NSN 1015-01-482-4914) (EIC: 3WE) LIN: H57505,* 15 August 2006.

TM 9-3990-206-14&P. *Operator's, Unit, Direct Support and General Support Maintenance Manual (Including Repair Parts and Special Tools List) for Palletized Load System (PLS) Flatrack Model M1077 /M1077A1 (NSN 3990-01-307-7676) ISO Compatible Palletized Flatrack M1 (IPF) (3990-01-406-1340),* 2 June 2006.

This page intentionally left blank.

Index

1

130GS Grader, Sectionalized, 8-21

3

35-Foot Riverine Assault Craft (RAC) with or without Trailer, 13-19

4

420-D Backhoe Loader, 8-12

6

613BS Scraper, Elevating, Sectionalized, 8-24
613WDS Water Distributor, Sectionalized, 8-26

8

8- x 8- x 10-Foot Shelters, 10-7
8- x 8- x 20-Foot Shelters, 10-9

9

950BS Scoop Loader, Sectionalized, 8-18

A

AN/MPQ-57 and AN/MPQ-61 High-Power Illuminator Radar (HIPIR) Phase II and Phase III Mounted on the M390 (Modified) Trailer, 7-10
AN/MRC-142B Radio Terminal Set with 30M Mast on M998 HMMWV, 2-68
AN/TYC-5A Data Communications Terminal, 10-13
Applicability Paragraph, 1-3
Assault Command Post With High Mobility Wheel Set, 3-32
Authorized Stockage List Mobility System (ASLMS),, 11-5, 11-7
Avenger, 7-1
Avenger on M1097/M1097A1/M1097A2 with ECU and PPU with or without Bustle Box Stowed on Roof, 7-3
Aviation Ground Power Unit, 4-8

B

Boat, Bridge, Erection, 8-55

C

Certification of Equipment for Helicopter Sling Load, 1-2
Certified Sling Loads, 1-1
Classification Definitions of Sling Load, 1-1
Communication or Electronic Systems Housed in Lightweight Multipurpose Shelters (LMS), 10-3
Communication or Electronic Systems Housed in S-250 Shelters, 10-1
Communication or Electronic Systems Housed in S-280 Shelters, 10-4
Container Roll-In/Out Platform (CROP), Empty, Stacked, 13-10
Container Roll-In/Out Platform (CROP), Loaded, 13-8
Containerized Kitchen Mounted on the Containerized Kitchen Trailer, 3-34

D

D5B Tractor Dozer, Sectionalized, 8-1
Deployable Print Production Center (DPPC) on COPS Trailer, 3-25
Digital Group Multiplexer (DGM) Digital Antenna Mast Program (DAMP) Pallet Trailer, 12-5
Digital Tech Controller (DTC) Housed in a Modified Gitchner Shelter, 10-23
Downsized Digital Group Multiplexer (DGM) Assemblages, 10-18
Dry Support Bridge on M1077 Flatrack, 8-64
Dual HMMWV, Side by Side (Shotgun Method), 2-38
Dual HMMWV, Side by Side (Shotgun Method), with AMTECH Helmet Hardtop Basic, 2-46
Dual M56 Smoke Generating Systems on M1113 HMMWV, Side by Side (Shotgun Method), 2-35

E

Enhanced Palletized Loading System, Flatrack, Empty, 13-6
Enhanced Palletized Loading System, Flatrack, Loaded, 13-5
Equipment Rigging Procedures, 1-3
Extendable Boom Forklift (EBFL) (New Version) (USMC), 8-52
Extendable Boom Forklift (USMC), 8-50

F

Field Maintenance Equipment Shop (FME), 7-14
Field Maintenance Equipment Shop 21, Unmanned Shop, Electrical Equipment, 7-16

Five 500-Gallon Fuel Drums, 9-7
Front Power Unit, MK48, 2-110
Full-Up Power Pack (FUPP) Container, M1A1, 11-1

G

General Rigging Instructions, 1-4

H

Helmet Hardtop (AMTECH) Cargo Bed Cover on M1097A2 HMMWV, 2-50
High Mobility Materiel Handler (HMMH), 8-17
High Mobility Trailer with AN/MJQ-35A Power Unit, 4-6
High Mobility Trailer-Light (HMT), M1101 with AN/TSQ-198, Tactical Terminal Control System (TTCS), 3-21
High Mobility Trailers (HMT) with Generator for Joint Surveillance Target Attack Radar (JSTAR) SystemS, 3-19
High Mobility Trailers (HMT), M1101/M1102, 3-17
Hookup, 1-4

I

IC45 Crawler Carrier, 8-9
Inland Petroleum Distribution System (IPDS), Mainline Pump on 20-Foot Flatrack, 8-75
Interim Fast Attack Vehicle Truck (IFAV), Long Wheel Base, 2-87
Interim Fast Attack Vehicle Truck (IFAV), Long Wheel Base, Side by Side (Shotgun), 2-88
Introduction, 1-1, 3-1, 4-1, 5-1, 6-1, 7-1, 8-1, 9-1, 10-1, 11-1, 12-1, 13-1, 14-1

J

Jam-Resistant Secure Communications (JRSC) Satellite Communications Terminal with Mobilizer, 10-16
Joint Surveillance Target Attack Radar (JSTAR) System, with LMS Shelter and Mission Trailer, HMT with Generator, 5-33
JSTAR Common Ground Station (CGS) Support Vehicle, M1097 HMMWV and M1102 High Mobility Trailer, 5-49

L

Launch Pod Container (LPC) with Multiple Launch Rocket System (MLRS) Rockets or Guided Multiple Launch Rocket System (G-MLRS) Rockets / Guided Missile Launch Assembly (GMLA)Pods with Army Tactical Missile System (ATACMS) Missiles, Four Containers, 11-14
Launch Pod Container (LPC) with Multiple Launch Rocket System (MLRS) Rockets or Guided Multiple Launch Rocket System (G-MLRS) Rockets / Guided Missile Launch Assembly (GMLA)Pods with Army Tactical Missile System (ATACMS) Missiles, Two Containers, 11-11
Light Armored Vehicle (LAV) (USMC), 2-112
Light Medium Tactical Vehicles (LMTV) M1078/M1078A1/, 2-94, 2-96
Light Rough Terrain Forklift (LRTF) (USMC), 8-54
Lightweight Generator Frame Assembly (AN/TSC-93B Reconfiguration), Satellite Communications Terminal, 12-7
Load Description, 1-3
Load Handling System-Compatible Water Tank Rack System (LHS-CWTRS), 9-9
LRT-110, 7 ½-Ton Crane, 8-38
LRT-110, 7 ½-Ton Crane Boom, 8-40
LRT-110, 7 ½-Ton Crane Power Unit, 8-42

M

M101A1 Howitzer, 105-mm, with or without A-22 Cargo Bags, 6-1
M101A2 3/4-Ton Trailer, 3-1
M102 Howitzer, 105-mm, 6-6
M1025A2 Truck, 1 1/4-Ton (HMMWV) with Line of Sight Anti-Tank (LOSAT) Reloader Crane and High Mobility Resupply Trailer (HMT), 5-83
M1037 (H-HMMWV) with Compressed Air-Foam System, Mobile (CAFSM), 2-81
M1037 (HMMWV) with AN/TPQ-36 Firefinder Generator Pallet, 2-76
M1037 Shelter Carrier (HMMWV) with M101A2 Trailer, Cargo, 5-4
M1037 Shelter Carrier (HMMWV) with S-250 or S-250E Shelter, 2-9
M1037 Shelter Carrier (HMMWV) with S-250/S-250E Shelter and M116A2 Trailer Mounted Generators, PU-751/PU753/PU-620/M, 5-7
M1037 Shelter Carrier, 1-1/4 Ton (HMMWV) with AN/TPQ-36, (S-250 Shelter), Operations Control Group and Radar Set Antenna Mounted on M103A1 Trailer, 5-22
M1037/M1042 Shelter Carrier (HMMWV) with Lightweight Multipurpose Shelter (LMS), 2-14
M1037/M1097 Shelter Carrier (HMMWV) with G15840 Smoke Generator Set, M157/M157A1E1, 2-30
M1037/M1097 Truck, Utility, 1 1/4-Ton (HMMWV) and M119, 105-mm Howitzer, 5-80
M1048 Trailer with Tracked Suspension System (TSS), 3-3
M105A3 Trailer, 3-29
M1082 Light Medium Tactical Vehicle (LMTV) and M1095 Medium Tactical Vehicle (MTV) Trailers, 3-31
M1097 (H-HMMWV) with AN/TPQ-42, Meteorological Hydrogen Generator (MHG), 2-79

M1097 (HMMWV) and High Mobility Trailer (HMT), 5-41
M1097 (HMMWV) with AN/TSQ-183, Counter Battery Radar and M101A2 Trailer, 5-30
M1097 (HMMWV) with Contact Maintenance Truck, Heavy (CMTH), 2-54
M1097 (HMMWV) with High Mobility Digital Group Multiplexer (DGM) Auxiliary Equipment Transportation Container (AETC) in 2 and 3 Mast Configurations, 2-58
M1097 Shelter Carrier (HMMWV) with S-250 Shelter and Trailer Generator Sets on M116A2 Trailer, 5-25
M1097 Shelter Carrier, 1-1/4 Ton (HMMWV) with AN/TPQ-36 (V) 7, (S-250 Shelter), Operations Control Group and Radar Set Antenna Mounted on M116A2 Trailer, 5-16
M1097 Shelter Carrier, 1-1/4 Ton (HMMWV) with AN/TPQ-36(V)7, (S-250 Shelter), Operations Control Group, OKG-398/TPW, and M116A2 Equipment Trailer Group, 5-36
M1097 Shelter Carrier, Heavy HMMWV, with S-250 or S-250E Shelter, 2-12
M1097 Truck, Utility, 1 1/4-Ton (HMMWV) with AN/MPQ-64 Tactical Quiet Generator (TQG) and High Mobility Trailer (HMT) with Sentinel Antenna Transceiver Group (ATG), 5-52
M1097 Truck, Utility, 1-1/4 Ton (HMMWV) with Pallet Group OA-9134/TSC, Antenna AS-3036/TSC and PU-753 Generator Set on M116A2 Trailer, 5-13
M1097, 1-1/4 Ton (HMMWV) with Generator Pallet Group and PU 799 G-85/TPQ-36 Generator Group on M116A3 Trailer, 5-55
M1097, 1-1/4 Ton (HMMWV) with Generator Pallet Group, G-86-TPQ-36 (V)7, and Radar Set Antenna Mounted on M116A2 Trailer, 5-19
M1097/M1097A2 Shelter Carrier (HMMWV) with Lightweight Multipurpose Shelter (LMS) (USMC), 2-16
M1097/M1097A2 Shelter Carrier (HMMWV) with Lightweight Multipurpose Shelter (LMS) using Shelter Lift Rings as Sling Guides, 2-18
M1097/M1113 Shelter Carrier (HMMWV) with Gitchner Model 1497A Shelter, 2-23
M1097A1 (H-HMMWV) with Fiberglass Cargo Bed Cover (CBC), 2-42
M1097A1 (HMMWV) with Tactical Data Network (TDN)- Gateway (USMC), 2-28
M1097A2 (H-HMMWV) with the Secure Mobile Anti-Jam RELIABLE Tactical Terminal (SMART-T), 2-60
M1097A2 (HMMWV) with Advanced Field Artillery Tactical Data System (AFATDS) Full Size or Partial Soft Top Installation Kit (STIK), 2-74
M1097A2 (HMMWV) with Advanced Field Artillery Tactical Data System (AFATDS) Full Size Soft Top Installation Kit (STIK) and M101A1 Trailer, 5-38
M1097A2 (HMMWV) with Advanced Field Artillery Tactical Data System (AFATDS) Soft Top Installation Kit (STIK) and PU-797 Generator Set on M116A3 Trailer, 5-68
M1097A2 Shelter Carrier (HMMWV) with LMS Shelter Using Shelter Lift Rings as Sling Guides and PU-798 Generator on M116A3 Trailer, 5-60
M1097A2 Shelter Carrier (HMMWV) with S-250 Shelter and Trailer Generator Sets on M116A3 Trailer, 5-66
M1097A2 Shelter Carrier (HMMWV) with Special Operations Media System (SOMS-B) in S-788G Shelter (LMS), 2-26
M1098 HMMWV with Remote Landing Site Tower (RLST), 2-56
M1112 400 Gallon Water Trailer, 3-27
M1113 (HMMWV) with LMS Shelter and High Mobility Trailer (HMT), 5-43
M1113 (HMMWV) with LMS Shelter and Shadow Tactical Unmanned Aerial Vehicle (TUAV) Launch Recovery Trailer, 5-74
M1113 (HMMWV) with M56 Smoke Generating System, 2-32
M1113 (HMWWV) with Petroleum Quality Analysis System (PQAS) Shelter, 2-83
M1113 Shelter Carrier (HMMWV) with LMS Shelter and PU-798 Generator on M116A3 Trailer, 5-57
M1113 Shelter Carrier (HMMWV) with LMS Shelter Using Shelter Lift Rings as Sling Guides and PU-798 Generator on M116A3 Trailer, 5-63
M1113 Truck, 1 1/4-Ton (HMMWV) Petroleum Quality Analysis System (PQAS) Shelter and PQAS Trailer, 5-91
M1113 Truck, 1 1/4-Ton (HMMWV) with Line of Sight Anti-Tank (LOSAT) Fire Unit and High Mobility Resupply Trailer (HMT), 5-86
M1113 Truck, 1 1/4-Ton (HMMWV) with Line of Sight Anti-Tank (LOSAT) Fire Unit with Reloader Crane and Four Missiles, 7-6
M1113 Truck, 1 1/4-Ton (HMMWV) with M56 Smoke Generator and M101A2 Trailer, 5-88
M1113 Truck, Utility, Expanded Capacity (HMMWV) with Lightweight Multipurpose Shelter (LMS) using Shelter Lift Rings as Sling Guides, 2-21
M1123 Cargo/Troop Carrier (HMMWV) with Marine Armor Kit, Fully Armored Troop Section (USMC), 2-85
M114A1 155-mm Howitzer, 14-5
M116A2 Trailer-Mounted Power Units, Generators, and Power Plants, 4-1
M149-Series Water Trailer, 14-3
M198 Howitzer, 155-mm, Towed with External Airlift Travel Lock Assembly, 6-13
M200A1 Trailer-Mounted Power Units, Generators, and Power Plants, 4-5
M31 Expeditionary Arresting Gear System (EAGS), 3-37
M353 Trailer Chassis with Mounted Generators, 4-3
M35A1/A2 2 ½-Ton Cargo Truck, 14-1

M35A3 2 1/2-Ton Cargo Truck, 2-106
M4 Robotic Mine Flail, 8-68
M777/M777A1/M777A2, 155-mm Lightweight Howitzer, 6-15
M817A3 Semi-Trailer, 3-44
M871A1 Semitrailer, 3-15
M966/M1036/M1045/M1045A2/M1046 TOW Missile Carrier (HMMWV)M1025/M1025A2/M1026/M1043/M1043 A2/M1043A2 with Marine Armor Kit (MAK)(USMC)/M1044/M1151 Armament Carrier (HMMWV)/M1114 Up-Armored HMMWV, 2-3
M989 Heavy-Expanded Mobility Ammunition Trailer (HEMAT), 3-5
M989A1 Heavy-Expanded Mobility Ammunition Trailer (HEMAT II), 3-6
M996/M997/M997A1/M997A2 Truck, Ambulance, (HMMWV), 2-1
M998 (HMMWV) with Two MRC-127 Stacks, 2-70
M998 HMMWV with Man Portable Air Defense Systems (MANPADS), 2-77
M998 Truck, Cargo, 1 1/4-Ton (HMMWV) with AMTECH Helmet Hardtop, 2-45
M998/M1038 (HMMWV) with Lightweight Tactical Fire Control Systems (LTACFIRE)/Tactical Terminal Control Systems (TTCS), 2-72
M998/M1038 1 1/4-Ton Cargo Truck (HMMWV) and M102, 105-mm Howitzer, 5-77
M998/M1038 Truck, Utility, 1-1/4 Ton (HMMWV) and G-85/TPQ-36 (V)7 Generator Group on M116A2 Modified Trailer, 5-10
M998/M1038 Truck, Utility, 1-1/4 Ton (HMMWV) with M101A1/A2 Trailer, Cargo, 5-1
M998/M1123 with Marine Armor Kit (MAK) (USMC)/M1037 Modified (GVW 9,400 lbs)/M1038/M1097/M1097A1/, 2-6
Medium Girder Bridge (MGB) (USMC), 8-63
Medium Tactical Vehicle Replacement (MTVR) (USMC), 2-108
Medium Tactical Vehicle, Tractor, M1088/M1088A1, 2-100
Medium Tactical Vehicles M1083/M1083A1/M1084/M1085/, 2-91
Mine Clearing Line Charge Mounted on M200A1 Trailer, 8-36
Mine Clearing Line Charge Mounted on M353 Trailer, 8-34
Mk14 Trailer, Container Hauler, 3-8
Mk15 Trailer, Wrecker/Recovery, 3-10
Mk16 Trailer, Fifth-Wheel Adapter, 3-12
Mk17 Trailer, Drop Side, Cargo, 3-13

N

NATO Air Base SATCOM (NABS) Power Pallet, AN/TSC-85B (V)2, 12-3
NATO Airbase Satcom (NABS) Shelter Pallet, AN/TSC-93B (V) 2, 10-19
Naval Special Warfare Rigid Inflatable Boat (NSWRIB) with or without Trailer, 13-11

O

OE-361/G Quick Reaction Satellite Antenna, 12-1
One Conex Container, 14-6
One MILVAN Container, 14-8

P

Palletized Loading System (PLS), M1077 Flatrack, Empty, 13-3
Palletized Loading System (PLS), M1077 Flatrack, Loaded, 13-1
Platoon Command Post (PCP)/Battery Command Post (BCP), 7-17
Platoon Support Van/Maintenance Center (PSV/MC), 7-12
Pneumatic Tool and Compressor Outfit/Hydraulic Pioneer Tool Outfit (PTO) on M353 Trailer, 8-70
Positioning and Attaching the Sling, 1-5
Preparation, 1-4
Preparing the Equipment, 1-4
Preparing the Load, 1-4
Prohibited Sling Loads, 1-2
Prophet AN/MLQ-40(V) on M1097 HMMWV, 2-51

Q

Quadcons, 11-8

R

Requests for Sling Load Certification, 1-2
Ribbon Bridge Erection Boat, MK2, 8-57
Ribbon Bridge Interior Bay, 8-59
Ribbon Bridge Ramp Bay, 8-61
Rigging, 1-4
Roller, Compactor, Vibrator, 8-33
Roller, Towed, Vibrating, 8-28
Rollers, Towed, 8-29

S

Shelter, Knockdown, 8- x 8- x 20-Foot, 10-14
Small Emplacement Excavator (SEE), 8-14
Small Emplacement Excavator (SEE) Transporter, 3-40
Small Unit Riverine Craft (SURC) with Trailer, 13-20
SP-7 Wheel-Mounted Crane, 8-44
Special Operations Craft-Riverine (SOC-R), 13-15
Special Operations Craft-Riverine (SOC-R) and Naval Special Warfare Rigid Inflatable Boat (NSWRIB) Trailer, 13-13

Special Operations Craft-Riverine (SOC-R) with SOC-R Trailer, 13-17
Special Operations Media Systems (SOMS B) on Commander's Crash-Out-Package System (COPS) Trailer, 3-23
SRS-106 Integrated Tower Systems Portable Tower Trailer (PTT), 8-67
Standard Automotive Tools Set (SATS) Mounted on Sats Trailer, 3-42
Standard Automotive Tools Set (SATS) Trailer, 3-39
Suitable Sling Loads, 1-1

T

Tactical Super High Frequency (SHF) Satellite Terminal (TSST) on M1113 HMMWV, 2-64
Tactical Super Satellite Terminal (TSST) Mobile Power Unit (MPU) on M1113 HMMWV, 2-66
Tandem Lift of Two ISU-90 Shipping/Storage Containers, 11-3
Three Storage Modules, Fuel/Water (Side by Side), 9-3
Tractor (Dozer), Full Tracked, Type III, JD 450G, 8-7
Tractor Full Tracked, Case Model 1150, 8-3
Tractor Full Tracked, Case Model 1150E, 8-5
Tractor, Wheeled, Industrial, Case Model 580, 8-10
Trojan Air Transportable Electronic Reconnaissance System (TATERS) High Gain Antenna Group (HGAG) Shelter, 10-21
Trojan Spirit Lite (V)2 Central Communications, AN/TSQ-226 (V)2 on M1113 (HMMWV) and M1102 Cargo Trailer, 5-46
Trojan Spirit Lite (V)2 Central Communications, AN/TSQ-226 (V)2 on M1113 HMMWV, 2-61
Truck Forklift, MC-4000, 8-45
Truck Forklift, MC-6000, 8-49
Truck Forklift, RT-4000, 8-47
Truck, Cargo, 2 1/2-Ton, M35A2 Modified, Part of an AN/MPQ-49A Forward Area Alerting Radar (FAAR) System, 2-104
Two M101A1 Howitzers, 105-mm, Side by Side (USMC), 6-4
Two M102 Howitzers, 105-mm, with or without One, Two, or Three A-22 Cargo Bags, 6-7
Two M119A2 Howitzers, 105-mm, Forward Firing Position, Side by Side, 6-10
Two Storage Modules, Fuel/Water (Side by Side), 9-1

U

Unique Items of Equipment or Operational Requirements, 1-3
Unique Sling Loads, 1-1

V

Vibrating Roller, Caterpillar, RO-33, 8-31
Viewing the Load, 1-5

W

Water Purification Unit, Reverse Osmosis (ROWPU), 8-72
Water Purification Unit, Reverse Osmosis (ROWPU), Trailer Mounted, 8-74

This page intentionally left blank.

FM 4-20.199
MCRP 4-11.3E, VOL III
NTTP 3-04.13
AFMAN 11-223 (I), VOL III
COMDINST M13482.4B

20 February 2009

By Order of the Secretary of the Army:

GEORGE W. CASEY, JR.
General, United States Army
Chief of Staff

Official:

JOYCE E. MORROW
Administrative Assistant to the
Secretary of the Army
0903501

DISTRIBUTION:

Active Army, Army National Guard, and United States Army Reserve: Not to be distributed. Electronic media only.

ALLEN G. PECK
Major General, USAF
Commander
Headquarters Air Force Doctrine Center

JAMES F. AMOS
Lieutenant General, USMC
Deputy Commandant for Combat
Development and Integration