FOOD SERVICE EQUIPMENT SCHEDULE

ITEM	QUANTITY	DESCRIPTION	EQUIPMENT CLASS	SIZE (MILLIMETERS APPROXIMATE) X	Y	Z	ELECTRICAL VOLTS	PHASE	NON-MOTOR KW	TOTAL AMPS	MOTOR KW	CONN	PLUG TYPE	PLUMBING HW 45 C	HW 60 C	CW	WASTE	ID WASTE	GAS	KW	COMMENTS
64a	2	TRAY SLIDE	A	8100	432	–	–	–	–	–	–	–		–	–	–	–	–	–	–	(A-5)
65		NOT USED	–	–	–	–	–	–	–	–	–	–		–	–	–	–	–	–	–	
66	4	HOT FOOD WELL (6 PANS)	A	2153	610	330	208	1	2.56	12.3	–	P	NEMA 5-15P	–	–	–	–	–	–	–	
66a	4	SHELF PROTECTOR (SNEEZE GUARD)	A	2216	318	356	120	1	–	–	–	–		–	–	–	–	–	–	–	
67	4	COUNTER, HOT/GRILL	A	2438	762	864	–	–	–	–	–	–		–	–	–	–	–	–	–	(A-5)
67a	2	TRAY SLIDE	A	7200	432	–	–	–	–	–	–	–		–	–	–	–	–	–	–	(A-5)
68	6	DISPENSER, DINNER PLATES	C	457	838	1016	–	–	–	–	–	–		–	–	–	–	–	–	–	
69	4	GRIDDLE	A	1273	876	578	120	1	–	3.0	–	P	NEMA 5-15R	–	–	–	–	–	20G	42.0	(A-11)
70	4	GRILL STAND	A	1213	835	648	–	–	–	–	–	–		–	–	–	–	–	–	–	
70a	4	SPLASH GUARD	A	1829	25	508	–	–	–	4	0.75	H		–	–	–	–	–	–	–	(A-5)
71	4	HOOD EXHAUST	A	REF. MECHANICAL			120	1	1.2	10	–	H		–	20	–	40	50	–	–	(A-7)
71a	2	HOOD EXHAUST	A	REF. MECHANICAL			120	1	1.2	10	–	H		–	20	–	40	50	–	–	(A-7)
72	4	FIRE SUPPRESSION SYSTEM	A	–	–	–	–	–	–	–	–	–		–	–	–	–	–	–	–	
73	2	CABINET, FOOD WARMING (PASS-THRU)	A	1448	991	2115	208	1	2.25	13	–	H		–	–	–	–	–	–	–	
74	2	CABINET, PASTRY STORAGE	C	629	800	1854	–	–	–	–	–	–		–	–	–	–	–	–	–	
75	4	COUNTER, DESSERT /CONDIMENTS	A	2312	762	864	–	–	–	–	–	–		–	–	–	–	–	–	–	(A-5)
76	4	COLD FOOD PAN	A	2153	610	483	120	1	–	6	.25	P	NEMA 5-15P	–	–	–	–	15	–	–	
77	4	BREATH PROTECTOR/DISPLAY SHELVES	A	2216	318	356	120	1	–	–	–	H		–	–	–	–	–	–	–	
77a	4	TRAY SLIDE	A	8000	432	–	–	–	–	–	–	–		–	–	–	–	–	–	–	(A-5)
78	2	REFRIGERATOR, ROLL-THRU	A	1321	902	2242	120	1	0.77	16.2	.38	P	NEMA 5-20R	–	–	–	–	–	–	–	
79	4	TOASTER	C	580	380	840	208	1	5	24	–	P	NEMA 6-30P	–	–	–	–	–	–	–	
80	4	DISPENSER, SODA	L	559	762	813	120	1	.28	8.1	.18	P	NEMA 5-15R	–	–	20	–	20	–	–	
81	2	BEVERAGE COUNTER W/TROUGH	A	4600	965	864	–	–	–	–	–	–		–	–	–	–	20	–	–	(A-5)
81a	2	TRAY SLIDE	A	4800	432	–	–	–	–	–	–	–		–	–	–	–	–	–	–	(A-5)
81b	2	TRAY SLIDE	A	5100	432	–	–	–	–	–	–	–		–	–	–	–	20	–	–	(A-5)
81c	2	BEVERAGE COUNTER W/TROUGH	A	5100	965	864	–	–	–	–	–	–		–	–	–	–	–	–	–	(A-5)
82	4	FRUIT JUICE DISPENSER	C	406	822	702	–	–	–	–	–	–	NEMA 5-15R	–	–	20	–	20	–	–	(A-5)
83	2	SANDWICH UNIT W/ SNEEZE GUARD	C	1228	864	1181	120														
84	4	ICE MAKER, DISPENSER	A	762	762	915	120	1	–	2.2	–	P	NEMA 5-15R	–	–	15	–	20	–	–	(A-29)
85	2	DISPENSER, JUICE	C	406	432	876	120	1	.14	5.8	0.13	P	NEMA 5-15R	–	–	–	–	–	–	–	
86		NOT USED	–	–	–	–	–	–	–	–	–	–		–	–	–	–	–	–	–	
86a		NOT USED	–	–	–	–	–	–	–	–	–	–		–	–	–	–	–	–	–	
87	4	DISPENSER, MILK	C	918	435	1022	120	1	–	2.5	.15	P	NEMA 5-15R	–	–	–	–	–	–	–	
88	8	DISPENSER, CUP & GLASS	C	634	696	916	–	–	–	–	–	–		–	–	–	–	–	–	–	
89		NOT USED	–	–	–	–	–	–	–	–	–	–		–	–	–	–	–	–	–	
89a		NOT USED	–	–	–	–	–	–	–	–	–	–		–	–	–	–	–	–	–	
90		NOT USED																			
91	1	FLOOR TROUGH W/GRATE	A	1067	381	102	–	–	–	–	–	–		–	–	–	100	–	–	–	
92	1	ICE MAKING MACHINE	A	1067	800	1689	208	3	–	10.7	–	H		–	–	10	–	20	–	–	
93		NOT USED	–	–	–	–	–	–	–	–	–	–		–	–	–	–	–	–	–	
94	1	RACK, SYRUP TANK	A	1228	610	1482	–	–	–	–	–	–		–	–	–	–	–	–	–	
95	4	COFFEE DISPENSER WITH PREHEATER	A	432	533	775	120/208	1	8	45.5	–	H		–	–	–	–	–	–	–	
96		NOT USED																			
97		NOT USED	–	–	–	–	–	–	–	–	–	–		–	–	–	–	–	–	–	
97a		NOT USED	–	–	–	–	–	–	–	–	–	–		–	–	–	–	–	–	–	
98		NOT USED	–	–	–	–	–	–	–	–	–	–		–	–	–	–	–	–	–	
99	4	CAPPUCCINO MACHINE	L	356	559	864	120	1	1.8	–	–	–	NEMA 5-15R	–	–	15	–	20	–	–	
100		NOT USED																			
101	2	SOFT SERVE MACHINE	A	572	838	1419	208	3	–	29.5	2AT1.1,4	H		–	–	–	–	–	–	–	(A-11)
102	2	SOILED TRAY TABLE (GRAVITY FEED)	A	5714	800	864	–	–	–	–	–	–		–	–	–	–	–	–	–	(A-5), (A-8)
103	2	DISHTABLE, SOILED W/TROUGH	A	2896	760	864	–	–	–	–	–	–		–	–	–	–	–	–	–	(A-5), (A-8), (A-9)
104	2	DISHWASHING MACHINE	A	3048	770	1783	208	3	25	96.1	3.8	H		–	20	–	50	–	–	–	
104a	2	BOOSTER HEATER	A	600	580	800	480	3	25	–	–	–		–	–	–	–	–	–	–	
105	1	WASTE PULPING EXTRACTOR	A	1805	915	2720	208	3	–	60	5.5,484	H		20	–	–	–	50	–	–	
106	8	DOLLY	C	521	546	813	–	–	–	–	–	–		–	–	–	–	–	–	–	
107	4	DUST SET	A	406	102	–	–	–	–	–	–	–		–	–	–	–	–	–	–	
108	4	SINK, SILVER SOAK	C	635	686	457	–	–	–	–	–	–		–	–	–	–	–	–	–	
109	3	SERVICE SINK (FLOOR MOUNTED)	A	635	838	254	–	–	–	–	–	–		15	–	15	50	–	–	–	
110	2	DISHTABLE, CLEAN	A	2743	835	864	–	–	–	–	–	–		–	–	–	–	–	–	–	
111	2	CONVEYOR W/SOILED TRAY TABLES	A	2498	835	864	–	–	–	–	–	–		–	–	–	–	–	–	–	(A-5), (A-10)
112	2	SPRAY ASSEMBLY	A	–	–	–	–	–	–	–	–	–		15	–	15	–	–	–	–	
113	1	CLEAN/SANITIZING MACHINE	C	584	457	1158	120	1	–	11	.56	P	NEMA 5-15R	–	–	–	–	–	–	–	
114	4	DISPENSER, BOWL W/COVER	C	914	559	813	–	–	–	–	–	–		–	–	–	–	–	–	–	
115	4	WALL MOUNTED SORTING SHELF	A	1067	343	330	–	–	–	–	–	–		–	–	–	–	–	–	–	
116	1	WALL MOUNTED FLAT SHELF	A	2743	254	203	–	–	–	–	–	–		–	–	–	–	–	–	–	
117	4	DISPENSER, TRAY	C	432	737	1270	–	–	–	–	–	–		–	–	–	–	–	–	–	
118	4	BREAD RACK	L	1219	508	1829	–	–	–	–	–	–		–	–	–	–	–	–	–	
119		NOT USED																			
120		NOT USED																			
121		NOT USED																			
122		NOT USED																			
123		NOT USED																			
124		NOT USED																			
125		NOT USED																			
126		NOT USED																			
127		NOT USED																			
128		NOT USED																			
129		NOT USED																			
130		NOT USED																			
131		NOT USED																			
132	1	HOOD, EXHAUST	A	REF. MECHANICAL																	
C4	3	WARMER, REACH IN	A	816	769	1842	–	–	–	–	–	–		–	–	–	–	–	–	–	
C33	2	REFRIGERATOR, REACH IN	A	769	851	2118	–	–	–	–	–	–		–	–	–	–	–	–	–	

EQUIPMENT SIZE KEY:

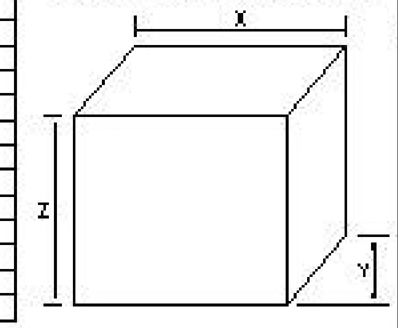

COMMENTS KEY LIST:

- A-1 SIZE INCLUDES SCALE ON STAND.
- A-2 PROVIDE FIVE (5) SHELVES PER UNIT.
- A-3 EQUIPMENT MOUNTED ON SLAB ON EXTERIOR OF BUILDING.
- A-4 COORDINATE WITH EQUIPMENT ITEM NO. 10a, 10b, 10c, and 10d.
- A-5 CUSTOM FABRICATED UNIT.
- A-6 F.E.S.U. AND M.S.U. AS NOTED IN PLAN SHALL BE 530mm ("X") x 1829mm ("Y") x 2165mm ("Z").
- A-7 HOOD PANELS (CABINETS) SHALL BE RECESSED PER 11400.
- A-8 ONE UNIT IS A "MIRROR IMAGE" OF THE OTHER. REF. PLAN.
- A-9 PROVIDE SCRAPING TROUGH SLOPED TO EQUIPMENT ITEM NO.15.
- A-10 CUSTOM FABRICATED UNIT MAY BE MADE IN SECTIONS.
- A-11 REFER TO MANUFACTURER'S CLEARANCE REQUIREMENTS FROM ADJACENT EQUIPMENT AND STRUCTURE.
- A-12 WITH CASTER, MOBIL
- A-13 BUILT-IN INSULATED FLOOR REF. DETAILS 1AND 2, SHEET K-8
- A-14 MILLWORK ITEM, SEE ARCHITECTURAL DRAWINGS

NOTES :

1. EQUIPMENT NUMBERS SHOULD BE STANDARDIZED, AS SHOWN, FOR ALL DINING FACILITIES.
2. DESIGN AGENT MUST VERIFY AVAILABILITY OF GAS SERVICE.
3. ALL FOOD SERVICE EQUIPMENT MUST MEET NSF INTERNATIONAL STANDARDS AND TB MED 530.
4. DIMENSIONS ARE IN MILLIMETERS.

EQUIPMENT CLASSES	NOTES:
A – CONTRATOR FURNISHED, CONTRACTOR INSTALLED FROM CONSTRUCTION FUNDS.	H ELECTRICAL HARDWARE CONNECTION REQUIRED
C – GOVERNMENT FURNISHED, GOVERNMENT INSTALLED, FUNDS OTHER THAN CONSTRUCTION.	P ELECTRICAL PLUG CONNECTION REQUIRED
L – OTHER	G PROVIDE EMERGENCY GAS SHUT-OFF FOR ALL GAS APPLIANCES

US Army Corps of Engineers Norfolk District

DATE: 10.25.1999
SCALE: AS NOTED
DRAWING NO. ###
Plot date 10.24.1999

NORFOLK DISTRICT
CORPS OF ENGINEERS
NORFOLK, VIRGINIA

FACILITIES STANDARDIZATION PROGRAM
TRAINEE BARRACKS - DINING FACILITY

EQUIPMENT SCHEDULE #2

K-6
SHEET OF