FOOD SERVICE EQUIPMENT SCHEDULE

ITEM	QUANTITY	DESCRIPTION	EQUIPMENT CLASS	SIZE (MILLIMETERS APPROXIMATE) X	Y	Z	ELECTRICAL VOLTS	PHASE	NON-MOTOR KW	TOTAL AMPS	MOTOR KW	CONN	PLUG TYPE	PLUMBING HW 45 C	HW 60 C	CW	WASTE	ID WASTE	GAS	KW	COMMENTS
1	1	RECEIVING SCALE ON MOBILE STAND	C	483	803	1600	–	–	–	–	–	–		–	–	–	–	–	–	–	(A-1), (A-12)
2	1	RECEIVING DESK	C	1524	762	749	–	–	–	–	–	–		–	–	–	–	–	–	–	
3	1	SHELVING	C	914	610	2050	–	–	–	–	–	–		–	–	–	–	–	–	–	(A-12)
4	2	HAND TRUCK	C	762	1524	356	–	–	–	–	–	–		–	–	–	–	–	–	–	(A-12)
5	41	SHELVING	C	1220	610	2050	–	–	–	–	–	–		–	–	–	–	–	–	–	(A-2), (A-12)
6	2	FREEZER COND. UNIT	A	880	872	818	208	3	–	11.5	2.2	H		–	–	–	–	–	–	–	(A-3)
6a	2	FREEZER EVAPORATOR UNIT (COOLER)	A	1835	352	375	208	1	2.76	16	0.09	H		–	–	–	–	–	–	–	(E-1)
7	3	REFG. COND. UNIT	A	616	784	508	208	3	–	4	0.75	H		–	–	–	–	–	–	–	(A-3)
7a	3	REFG. EVAPORATOR UNIT (COOLER)	A	1124	352	375	120	1	–	3.6	0.08	H		–	–	–	–	–	–	–	
8	5	DOORWAY CLOSURE	A	1194	–	2438	–	–	–	–	–	–		–	–	–	–	–	–	–	(A-4)
9	2	FAUCET HOSE STATION	A	–	–	–	–	–	–	–	–	H		–	20	20	–	–	–	–	(M-1), (M-2), (M-3)
10a	1	FREEZER	A	SEE AD		3048	120	1	1.0	8.3	–	H		–	–	–	–	–	–	–	(A-13), (E-2)
10b	1	REFRIGERATOR – DAIRY	A	SEE AD		3048	120	1	0.8	6.67	–	H		–	–	–	–	–	–	–	(A-13), (E-3)
10c	1	REFRIGERATOR – VEGETABLE	A	SEE AD		3048	120	1	0.8	6.67	–	H		–	–	–	–	–	–	–	(A-13), (E-3)
10d	1	FREEZER	A	SEE AD		3048	120	1	0.8	6.67	–	H		–	–	–	–	–	–	–	(A-13), (E-3)
10e	1	REFRIGERATOR – VEGETABLE	A	SEE AD		3048	120	1	0.8	6.67	–	H		–	–	–	–	–	–	–	(A-13), (E-3)
11	1	AIR CURTAIN	A	1829	324	375	120	1	–	5.1	2AT.38	H		–	–	–	–	–	–	–	(M-4)
11a	5	AIR CURTAIN	A	1829	324	375	120	1	–	5.1	2AT.38	H		–	–	–	–	–	–	–	(M-4)
11b		NOT USED																			
12	2	FLOOR TRHOUGH W/GRATE	A	Varies	305	102															
12a	2	CAN RACKS	C	721	1080	2197	–	–	–	–	–	–		–	–	–	–	–	–	–	
13	2	CART	A	915	610	305	–	–	–	–	–	–		–	–	–	–	–	–	–	
14	1	SINK, VEGETABLE PREP	A	4825	762	914	–	–	–	–	–	–		15	–	15	50	50	–	–	(A-5), (M-6), (M-7)
15	2	WASTE PULPING DISPOSER	A	1117	457	864	203	3	–	42.8	5.6&4	H		–	–	20	–	80	–	–	(M-8), (M-9), (E-4)
16	1	REFRIGERATOR, ROLL – THRU	A	802	884	2121	120	1	.37	12.8	.36	P	NENA 5-20R	–	–	–	–	–	–	–	
17	3	TABLE	C	1219	762	864	–	–	–	–	–	–		–	–	–	–	–	–	–	(A-12)
18	1	TABLE, /EQUIPMENT STAND	C	914	762	864	–	–	–	–	–	–		–	–	–	–	–	–	–	(A-12)
19	3	TABLE, /EQUIPMENT STAND, MOBILE	C	610	762	610	–	–	–	–	–	–		–	–	–	–	–	–	–	(A-12)
20	–	STORAGE SHELVING SYSTEM	A	SEE COMMENT LIST			–	–	–	–	–	–		–	–	–	–	–	–	–	(A-6)
21	3	TABLE W/ SINK	A	1829	762	902	–	–	–	–	–	–		15	–	15	–	50	–	–	(A-5)
22	2	MEAT SLICING MACHINE	C	572	667	654	120	1	–	9.8	.39	P	NENA 5-20R	–	–	–	–	–	–	–	
23	1	VEGETABLE PEELING MACHINE (27.2 K.)	A	702	667	1580	208	1&3	–	8.8&4.0	2AT.75	H		–	–	15	–	50	–	–	(E-5)
24	2	WASTE PUPER W/ THROUGH CONN.	A	1350	765	1092	208	3	–	33.4	4&4	H		–	–	15	–	80	–	–	(M-8), (E-4)
25	1	FOOD CUTTER	C	810	506	384	120	1	–	9.8	.38	P	NENA 5-20R	–	–	–	–	–	–	–	
26	3	RACK, UTENSIL	A	1219	559	2134	–	–	–	–	–	–		–	–	–	–	–	–	–	
27	1	RANGE, (4) BURNER	A	610	810	1511	–	1	–	–	–	–		–	–	–	–	–	20G	17.6	(A-11), (M-10)
27e	1	RANGE, (4) BURNER	A	610	810	1511	208	3	–	70	–	H									OPTIONAL ELECTRIC
28	2	PAN, FRYING & BRAISING (151.2 L)	A	1219	839	1861	120	1	0.3	2.5	–	P	NENA 5-15R	15	–	15	–	–	15G	35.2	(A-11), (M-10), (M-11)
28e	2	PAN, FRYING & BRAISING (151.2 L)	A	1219	839	1861	208	3	13.6	43	–	H									OPTIONAL ELECTRIC
29	1	REFRIGERATOR, RAPID THAW	A	1749	918	2134	120	1	1.25	20.2	.38	P	NEMA 14-20T	–	–	–	–	–	–	–	
30	2	FLOOR TROUGH W/ GRATE	A	762	762	102	–	–	–	–	–	–		–	–	–	100	–	–	–	(M-5)
31	1	FROZEN FOOD CABINET (PASS-THRU)	A	1473	965	1946	120	1	0.67	12	.58	P	NENA 5-20R	–	–	–	–	–	–	–	(A-11)
32	3	OVEN	A	1013	1016	2026	120	1	–	21.6	3AT.25	P	NENA 5-15R	–	–	–	–	–	20G	70	(A-11), (M-10), (E-6)
32e	3	OVEN	A	1013	1016	2026	208	3	6.7	60	22	H									OPTIONAL ELECTRIC
32a	1	OVEN/STEAMER COMBINATION	A	1334	1086	1982	120	1	2.88	24	–	P	NENA LS-30	20	–	20	–	50	20G	75	
32ae	1	OVEN/STEAMER COMBINATION	A	1334	1023	1885	208	3	–	170	60	H									OPTIONAL ELECTRIC
33	2	OPENER, CAN	C	111	203	305	120	1	–	1	0.02	P	NEMA 5-20R	–	–	–	–	–	–	–	
34	1	MIXING MACHINE, 56.78 LITERS.	A	698	997	1419	208	3	–	7.5	1.5	H		–	–	–	100	–	–	–	
35	1	MIXING MACHINE, 18.93 LITERS.	C	375	518	772	120	1	–	9.8	.38	P	NENA 5-20R	–	–	–	–	–	–	–	
36	2	KETTLE, 151.2 LITERS.	A	1140	1040	1020	120	1	.3	2.5	–	H		–	–	–	–	–	20G	30.8	(A-11), (M-12)
36e	2	KETTLE, 151.2 LITERS.	A	1140	1040	1020	208	3	12	58	24	H									OPTIONAL ELECTRIC
37	2	COUNTER, SS	A	2489	762	914															(A-5)
37a	1	TRAY SLIDE	A	12000	356	–	–	–	–	–	–	–		–	–	–	–	–	–	–	(A-5)
38	2	KETTLE W/ STAND	A	910	840	1486	120	1	.3	2.5	–	H		15	–	15	–	50	20G	50	(M-6), (M-13)
38e	2	KETTLE W/ STAND	A	910	840	1486	208	3	12	43	24	H									OPTIONAL ELECTRIC
39	1	HOOD, EXHAUST	A	REF. MECHANICAL			120	1	1.2	10	–	H		–	25	–	–	–	80	–	(A-7), (E-7), (M-14), (M-15), (M-26), (M-27), (M-36)
39a	1	HOOD, EXHAUST	A	REF. MECHANICAL			120	1	1.2	10	–	H		–	25	–	–	–	80	–	(A-7), (E-7), (M-14), (M-15), (M-28), (M-27), (M-36)
39b		NOT USED																			OPTIONAL ELECTRIC
40	2	FLOOR TROUGH W/ GRATE	A	568	750	102	–	–	–	–	–	–		–	–	–	–	80	–	–	(M-5)
41	4	FIRE SUPPRESSION SYSTEM	A	–	–	–	–	–	–	–	–	–		–	–	–	–	–	–	–	(M-18)
41a	1	FIRE SUPPRESSION SYSTEM	A	–	–	–	–	–	–	–	–	–		–	–	–	–	–	–	–	(M-18)
42	1	FRY/FILTER STA W/FOOD WARMER & LAMP	A	2172	883	1161	120	1	0.62	5.16	–	P	NENA 5-15R	–	–	–	–	–	20G	46.5	(A-11) (BANK OF THREE FRYER)
42e	1	FRY/FILTER STA W/FOOD WARMER & LAMP	A	2172	893	1191	208	3	–	103	21.5	H									OPTIONAL ELECTRIC
43		NOT USED																			
44		NOT USED																			
45	2	WATER METERS	A	430	315	300	–	–	–	–	–	–		16	–	15	–	–	–	–	(A-7), (M-17)
46	1	TABLE, BAKERS	C	1524	762	802	–	–	–	–	–	–		–	–	–	–	–	–	–	
47	2	COOKER, STEAMER	A	1085	894	1545	120	1	.3	2.5	–	H		–	–	15	–	80	20G	50	(A-11), (M-10), (M-16), (M-19)
47e	2	COOKER, STEAMER	A	549	894	1454	208	3	–	67	18	H									OPTIONAL ELECTRIC
48	7	HAND SINK (S/S)W/SOAP & TOWEL DISP	A	432	381	127	–	–	–	–	–	–		15	–	15	40	–	–	–	(M-20)
49	3	INGREDIENT BIN, MOBILE	C	362	489	698	–	–	–	–	–	–		–	–	–	–	–	–	–	
50	1	POT SANITIZER	A	844	914	2551	208	3	5&9	25&31	4	H		–	–	15	–	50	–	–	(A-11), (M-21), (E-10)
50a	1	TABLE, DRAIN BOARD	A	965	900	864	–	–	–	–	–	–		–	–	–	–	–	–	–	
50b		NOT USED																			
51	1	SINK, POT & PAN	A	6020	914	864	–	–	–	–	–	–		–	15	15	40	–	–	–	(A-5), (M-21)
51a	2	HEATER, BOOSTER	A	600	580	800	208	3	15	42	–	H		–	20	–	–	–	–	–	
52	2	SPRAY, PRERINSE	A	–	–	–	–	–	–	–	4	H		15	–	15	–	50	–	–	(M-6), (M-23)
53		NOT USED																			
54	1	SINK HEATER, BOOSTER	A	230	440	320	208	3	9	25	–	H		–	–	–	25	–	–	–	(M-24)
55	2	HOOD, EXHAUST	A	REF. MECHANICAL			–	–	–	–	–	–		–	–	–	–	–	–	–	(M-25)
56	5	CART, STORAGE (POT & PAN)	C	1270	660	1727	–	–	–	–	–	–		–	–	–	–	–	–	–	
56a	1	RACK, STORAGE FOR MIXER ACCES.	C	1295	585	1629	–	–	–	–	–	–		–	–	–	–	–	–	–	
57	4	CASHIER STATION AND TRAY SLIDE	A	SEE DETAIL			120	1	–	–	–	–	NEMA 5-15P	–	–	–	–	–	–	–	(A-14) CUSTOM BUILT
57a	4	CASHIER COUNTER	A	1300	356	38	–	–	–	–	–	–		–	–	–	–	–	–	–	(A-5)
58	2	HOT FOOD BAR (8 PANS) W/GAURD	A	3000	1193	914	208	3	–	14.1	–	–	NEMA 5-15P	–	–	–	–	–	–	–	(A-5)
59	2	SALAD BAR COLD PAN (14)W/SOUP STA.	A	3000	1193	914	120	1	–	8.6	–	–	NEMA 5-15P	–	–	–	–	–	–	–	(A-5) 1 PAN HOT FOOD 120V 8.3AMP 1100W 5-15P NEMA
60	2	DISPENSER, BREAD	C	470	584	686	–	–	–	–	–	–		–	–	–	–	–	–	–	
61	2	BUTTER DISPENSER	C	305	241	343	–	–	–	–	–	–		–	–	–	–	–	–	–	
62	8	DISPENSER, BREAD & BUTTER PLATES	C	406	737	1016	–	–	–	–	–	–		–	–	–	–	–	–	–	
63	2	SALAD/DELI BAR CORNER UNIT	A	Varies	Varies	914	–	–	–	–	–	–		–	–	–	–	–	–	–	
63a	2	MICROWAVE	A	533	482	356	120	1	–	20	–	–		–	–	–	–	–	–	–	
64	1	ICE CREAM DISPLAY CASE	A	2438	864	972	120	1	–	12	–	–	NEMA 5-20P	–	–	–	–	–	–	–	

EQUIPMENT SIZE KEY:

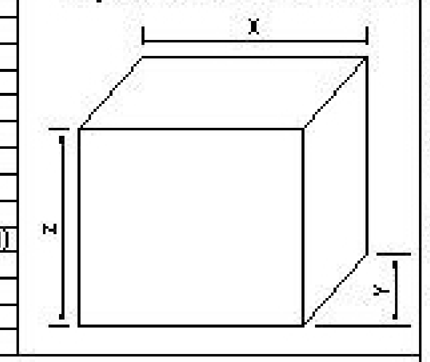

COMMENTS KEY LIST:

A-1 SIZE INCLUDES SCALE ON STAND.
A-2 PROVIDE FIVE (5) SHELVES PER UNIT.
A-3 EQUIPMENT MOUNTED ON SLAB ON EXTERIOR OF BUILDING.
A-4 COORDINATE WITH EQUIPMENT ITEM NO. 10a, 10b, 10c, and 10d.
A-5 CUSTOM FABRICATED UNIT.
A-6 F.E.S.U. AND M.S.U. AS NOTED IN PLAN SHALL BE 530mm ("x") x 1829mm ("y") x 2165mm ("z").
A-7 HOOD PANELS (CABINETS) SHALL BE RECESSED PER 11400.
A-8 ONE UNIT IS A "MIRROR IMAGE" OF THE OTHER. REF. PLAN.
A-9 PROVIDE SCRAPING TROUGH SLOPED TO EQUIPMENT ITEM NO. 24.
A-10 CUSTOM FABRICATED UNIT MAY BE MADE IN SECTIONS.
A-11 REFER TO MANUFACTURER'S CLEARANCE REQUIREMENTS FROM ADJACENT EQUIPMENT AND STRUCTURE.
A-12 WITH CASTER, MOBILE
A-13 BUILT-IN INSULATED FLOOR
A-14 MILLWORK ITEM, SEE ARCHITECTURAL DRAWINGS

M-1 PROVIDE 15 METER LONG HOSE.
M-2 PLACE PIPE PENETRATIONS FOR FAUCETS AT 150mm ON CENTER.
M-3 COORDINATE WITH EQUIPMENT ITEM 51a.
M-4 INSTALL UNIT ABOVE CEILING.
M-5 SEE PLUMBING PLANS FOR CONNECTION TO WASTE LINE.
M-6 PROVIDE VACUUM BREAKERS ON WATER COONECTION OR FAUCET.
M-7 COORDINATE WITH ITEM 15.
M-8 PROVIDE WALL MOUNTED CONTROL PANEL WITH DISCOUNECT.
M-9 50mm SLURRY INLET AND RETURN CONNECTIONS.
M-10 PROVIDE GAS PRESSURE REGULATOR. SET REGULATOR AS REQUIRED BY MANUFACTURER.
M-11 COORDINATE HOT AND COLD WATER CONNECTIONS WITH FILL FAUCET PROVIDED BY UNIT MANUFACTURER.
M-12 PROVIDE SWING SPOUT FAUCET.
M-13 HOT WATER CONNECTION TO FILLER FAUCET AND COLD WATER CONNECTION TO BOILER UNIT.
M-14 PROVIDE COOPER TUBING FOR WATER AND DETERGENT DELIVERY TO HOOD.
M-15 PROVIDE A MINIMUM 2 GALLON DETERGENT TANK IN THE HOOD CONTROL PANEL.
M-16 PROVIDE AN ADDITIONAL MANUAL PULL STATION AS SHOWN ON THE KITCHEN EQUIPMENT PLAN.
M-17 COORDINATE MOUNTING LOCATION WITH ITEM 36.
M-18 PROVIDE 8mm CW SUPPLY TO BOILER DRAIN CONDENSER.
M-19 PROVIDE 15mm CW SUPPLY TO UNIT.
M-20 PROVIDE CHROME GOOSENECK SPOUT AND 6" CHROME WRIST BLADE HANDLES. ALL OTHER FAUCET CHARACTERISTICS SHALL BE THE SAME AS SPECIFIED FOR P-5 IN SPECIFICATIONS 15400.
M-21 FOR FINAL RINSE SECTION CONNECT 15mm LINE FROM HOT WATER FAUCET TO BOOSTER HEATER (ITEM N 51a). ALSO INSTALL 50mm DRAIN TO FLOOR SINK.
M-22 PROVIDE A 20mm LINE FROM THE T & P VALVE TO THE FLOOR SINK.
M-23 PLACE FAUCETS AT 200mm ON CENTER.
M-24 50mm INLET AND OUTLET AT SINK REQUIRED. 20mm HOSE CONNECTION TO FLOOR SINK.
M-25 25mm CONDENSATE DRAIN TO FLOOR SINK.
M-26 WITH AUTOMATIC WASHDOWN SYSTEM.
M-27 CUSTOM FABRICATED HOOD.
M-28 COORDINATE AND VERIFY DRAIN REQUIREMENTS.
M-29 REQUIRES TWO 20mm DRAIN CONNECTIONS.
M-30 15mm DRAIN FROM ICE MAKER AND 20mm DRAIN FROM ICE BIN TO FLOOR SINK.
M-31 UNIT INCLUDES INTERNAL 15KW WATER BOOSTER HEATER.
M-32 100mm SLURRY INLET AND 80mm RETURN.
M-33 STAINLESS STEEL DUCT CONNECTING ITEM 104 TO EXHAUST SYSTEM.
M-34 SEE PLUMBING ITEM P-8.
M-35 20mm CONDENSATE DRAIN ROUTE TO FLOOR SINK.
M-36 40mm CONDENSATE DRAIN ROUTE TO FLOOR SINK.

EQUIPMENT CLASSES	NOTES:
A – CONTRATOR FURNISHED, CONTRACTOR INSTALLED	H ELECTRICAL HARDWARE CONNECTION REQUIRED
C – GOVERNMENT FURNISHED, GOVERNNENT INSTALLED,	P ELECTRICAL PLUG CONNECTION REQUIRED
L – OTHER	G PROVIDE EMERGENCY GAS SHUT-OFF FOR ALL GAS APPLIANCES – MAY BE A SINGLE VALVE SERVING ENTIRE KITCHEN INTERFACED WITH FIRE ALARM/EXTINGUISHING SYSTEM

US Army Corps of Engineers
Norfolk District

DATE: 10.25.1999 SCALE: AS NOTED
CHECKED: AES SUBMITTED: JSW
DESIGNED: SRGRL
PROJECT NO. 8806C
Plot date 10.24.1999

NORFOLK DISTRICT
CORPS OF ENGINEERS
NORFOLK, VIRGINIA

STANDARD DEFINITIVE DESIGN FOR ENL. PERSONNEL DINING FACILITY (501-800 PERSON A LA CARTE)

FOOD SERVICE EQUIPMENT SCHEDULE

K-2
SHEET 9 OF 15