FOOD SERVICE EQUIPMENT SCHEDULE

ITEM	QUANTITY	DESCRIPTION	EQUIPMENT CLASS	SIZE (MILLIMETERS APPROXIMATE) X	Y	Z	ELECTRICAL VOLTS	PHASE	NON-MOTOR KW	TOTAL AMPS	MOTOR KW	CONN	PLUG TYPE	PLUMBING HW 45 C	HW 60 C	CW	WASTE	ID WASTE	GAS	KW	COMMENTS
65	1	CARVING STATION	A	813	686	889	120	1	–	12.0	–	–	NEMA 6-15P	–	–	–	–	–	–	–	
66	7	HOT FOOD WELL (3 PANS)	A	2153	610	330	208	1	–	10.6	–	P	NEMA 6-15P	–	–	–	–	–	–	–	
66a	3	SHELF PROTECTOR (SNEEZE GUARD)	A	2216	318	356	120	1	–	–	–	H	–	–	–	–	–	–	–	–	
66b	2	SHELF PROTECTOR (SNEEZE GUARD)	A	2216	318	356	120	1	–	–	–	H	–	–	–	–	–	–	–	–	
67	3	COUNTER, HOT/GRILL	A	2438	762	864	–	–	–	–	–	–	–	–	–	–	–	–	–	–	(A-5)
67a	1	TRAY SLIDE		2438	432	152	–	–	–	–	–	–	–	–	–	–	–	–	–	–	
68	8	DISPENSER, DINNER PLATES	C	457	838	1016	–	–	–	–	–	–	–	–	–	–	–	–	–	–	
69	2	GRIDDLE	A	1273	876	678	208	3	–	34	–	H	–	–	–	–	–	–	–	42.0	(A-11), (M-10)
70	2	GRILL STAND	A	1213	635	848	–	–	–	–	–	–	–	–	–	–	–	–	–	–	
70a	2	SPLASH GUARD	A	1829	25	508	–	–	–	4	0.75	H	–	–	–	–	–	–	–	–	(A-5).
71	2	HOOD EXHAUST	A	REF. MECHANICAL			120	1	1.2	10	–	H	–	–	20	–	40	50	–	–	(A-7), (E-7), (M-14), (M-15), (M-26), (M-36)
72	2	FIRE SUPPRESSION SYSTEM	A	–	–	–	–	–	–	–	–	–	–	–	–	–	–	–	–	–	(M-18)
73	2	CABINET, FOOD WARMING (PASS-THRU)	A	1447	991	2115	208	1	–	13	–	H	–	–	–	–	–	–	–	–	(E-11)
74	2	CABINET, PASTRY STORAGE	C	559	737	1854	–	–	–	–	–	–	–	–	–	–	–	–	–	–	
75	1	COUNTER, DESSERT /CONDIMENTS	A	2000	762	864	–	–	–	–	–	–	–	–	–	–	–	–	–	–	(A-5)
76	1	COLD PAN (5) DROP-IN	A	1803	810	483	120	1	–	6	–	P	NEMA 5-15P	–	–	–	–	15	–	–	
77	1	BREATH PROTECTOR/DISPLAY SHELVES	A	1835	406	508	120	1	–	–	–	H		–	–	–	–	–	–	–	
77a	1	TRAY SLIDE	A	1872	356	–	–	–	–	–	–	–		–	–	–	–	–	–	–	(A-5)
78	2	REFRIGERATOR, ROLL-THRU W/RACKS	A	1321	991	2319	120	1	–	16.2	–	P	NEMA 5-20P	–	–	–	–	–	–	–	
79	2	TOASTER	C	560	360	840	208	1	–	24	–	P	NEMA 6-30P	–	–	–	–	–	–	–	
80	3	DISPENSER, SODA	L	560	711	702	120	1	–	8.1	–	P	NEMA 5-15P	–	–	20	–	20	–	–	(M-28)
81	2	BEVERAGE COUNTER W/TROUGH	A	4700	762	864	–	–	–	–	–	–		–	–	–	–	20	–	–	(A-5), (A-8), (M-28)
81a	2	TRAY SLIDE	A	4700	356	–	–	–	–	–	–	–		–	–	–	–	–	–	–	(A-5)
82	2	FRUIT JUICE DISPENSER	L	330	558	482	120	1	–	5.8	–	P	NEMA 5-15P	–	–	20	–	20	–	–	(A-5)
83	1	SANDWICH UNIT W/ SNEEZE GALRD	C	1226	864	1161	120	1	–	8	–	P	NEMA 5-15P								
84	3	ICE MAKER, DISPENSER	A	762	762	914	120	1	–	2.2	–	P	NEMA 5-15P	–	–	15	–	20	–	–	(M-29)
85	4	DISPENSER, JUICE	C	410	430	600	120	1	–	5.6	–	P	NEMA 5-15P	–	–	–	–	–	–	–	
86	3	COUNTER W/TROUGH	A	2438	762	864	–	–	–	–	–	–		–	–	–	–	–	–	–	(A-5), (M-28)
86a	2	TRAY SLIDE	A	2438	356	–	–	–	–	–	–	–		–	–	–	–	–	–	–	(A-5)
87	2	DISPENSER, MILK	C	918	435	1022	120	1	–	2.5	.15	P	NEMA 5-15R	–	–	–	–	–	–	–	
88	4	DISPENSER, CUP & GLASS	C	533	686	914	–	–	–	–	–	–		–	–	–	–	–	–	–	
89		NOT USED																			
90	2	FOOD WARMER	A	315	315	215	120	1	–	3.8	–	P	NEMA 5-15P	–	–	–	–	–	–	–	
91	2	FLOOR TROUGH W/GRATE	A	1219	304	102	–	–	–	–	–	–		–	–	–	100	–	–	–	(M-5)
92	2	ICE MAKING MACHINE	A	1217	864	2057	208	3	–	10.7	–	H		–	–	10	–	20	–	–	(E-12), (M-30)
93		NOT USED																			
94	1	RACK, SYRUP TANK	A	1226	610	1778	–	–	–	–	–	–		–	–	–	–	–	–	–	
95	2	COFFEE DISPENSER WITH PREHEATER	A	430	520	780	120/208	1	6	45.5	–	H		–	–	–	–	–	–	–	
96		NOT USED																			
97		NOT USED																			
97a	2	TRAY SLIDE	A	3658	356	–	–	–	–	–	–	–		–	–	–	–	–	–	–	(A-5)
98	1	RACK, CONDIMENT PACKS (9 BINS)	A	457	533	368	–	–	–	–	–	–		–	–	–	–	–	–	–	
99	2	CAPPUCCINO MACHINE	L	280	560	864	120	1	15	–	–	P	NEMA 5-15P	–	–	15	–	20	–	–	
100		NOT USED																			
101	1	SOFT SERVE MACHINE	A	672	818	1521	208	3	–	14&12	–	H		–	–	–	–	–	–	–	(A-11)
102	1	CONVEYOR W/SOILED TRAY TABLE	A	5714	800	864	–	–	–	–	–	–		–	–	–	–	–	–	–	(A-5), (A-8)
103	1	DISHTABLE, SOILED W/TROUGH	A	2885	750	864	–	–	–	–	–	–		–	–	–	–	–	–	–	(A-5), (A-8), (A-9)
104	1	DISHWASHING MACHINE	A	3048	770	1783	208	3	–	95.1	–	H		–	20	–	50	–	–	–	(E-13), (M-31)
104a	1	BOOSTER HEATER	A	600	580	600	208	3	–	108.3		H		–	20	–	–	–	–	–	(M-22)
105	1	WASTE PULPING EXTRACTOR	A	1805	915	2720	208	3	–	60	–	H		20	–	–	–	50	–	–	(E-4), (M-8), (M-32)
106	3	DOLLY	C	621	846	813	–	–	–	–	–	–		–	–	–	–	–	–	–	
107	2	DUCT SET	A	406	102	–	–	–	–	–	–	–		–	–	–	–	–	–	–	(M-33)
108	2	SINK, SILVER SOAK	C	835	686	762	–	–	–	–	–	–		–	–	–	–	–	–	–	
109	3	SERVICE SINK (FLOOR MOUNTED)	A	635	638	254	–	–	–	–	–	–		15	–	15	50	–	–	–	(M-34)
110	1	DISHTABLE, CLEAN	A	3226	635	546	–	–	–	–	–	–		–	–	–	–	–	–	–	
111	1	CONVEYOR W/SOILED TRAY TABLES	A	2496	635	864	–	–	–	–	–	–		–	–	–	–	–	–	–	(A-5), (A-10)
112	1	SPRAY ASSEMBLY	A	–	–	–	–	–	–	–	–	–		16	–	15	–	–	–	–	
113	1	CLEAN/SANITIZING MACHINE	C	564	457	1156	120	1	–	11	–	P	NEMA 5-15P	–	–	–	–	–	–	–	
114	2	DISPENSER, BOWL W/COVER	C	914	559	813	–	–	–	–	–	–		–	–	–	–	–	–	–	
115	2	WALL MOUNTED SORTING SHELF	A	1067	343	330	–	–	–	–	–	–		–	–	–	–	–	–	–	
116		NOT USED																			
117	2	DISPENSER, TRAY	C	432	737	1270	–	–	–	–	–	–		–	–	–	–	–	–	–	
118	2	BREAD RACK	L	1218	508	1829	–	–	–	–	–	–		–	–	–	–	–	–	–	
119	1	PROOFING CABINET	C	533	818	1772	120	1	–	8.3	–	P	NEMA 5-15P	–	–	–	–	–	–	–	
120	1	REFRIGERATOR DISPLAY	A	1397	762	2006	120	1	–	8	–	P	NEMA 5-15P	–	–	–	–	–	–	–	
121		NOT USED																			
122	1	CHUTE HOT SANDWICH	A	914	1873	686	120/208	1	–	13.2	–	P	NEMA L14-30P	–	–	–	–	–	–	–	
123	2	PIZZA WARNER	C	460	510	560	120	1	–	12.3	–	P	NEMA 5-15P	–	–	–	–	–	–	–	
124	1	CHEESE WARMER	C	304	304	400	120	1	–	3.3	–	P	NEMA 5-15P	–	–	–	–	–	–	–	PROVIDE ELECTRICAL OUTLETS FOR EQUIP. UNDER THE COUNTER.
125	1	NACHOS WARMER	A	585	685	638	120	1	–	10.4	–	P	NEMA 5-15P	–	–	–	–	–	–	–	
126	1	MICROWAVE OVEN	C	457	457	178	120	1	–	17.5	–	P	NEMA 5-20P	–	–	–	–	–	–	–	
126a	1	COUNTER	A		762	864	–	–	–	–	–	–		–	–	–	–	–	–	–	(A-5)
126b	1	COUNTER	A		762	864	–	–	–	–	–	–		–	–	–	–	–	–	–	(A-5)
126c	1	COUNTER	A		762	864	–	–	–	–	–	–		–	–	–	–	–	–	–	(A-5)
126d	1	COUNTER	A		762	864	–	–	–	–	–	–		–	–	–	–	–	–	–	(A-5)
126e	1	COUNTER	A		762	864	–	–	–	–	–	–		–	–	–	–	–	–	–	(A-5)
127	1	DONUT/PASTRY DISPLAY	C	787	609	914	120	1	–	2	–	P	NEMA 5-15P	–	–	–	–	–	–	–	
128	1	HOT DOG ROLLER GRILL	C	457	457	178	120	1	–	9.6	–	P	NEMA 5-15P	–	–	–	–	–	–	–	
129		NOT USED																			
130		NOT USED																			
131		NOT USED																			
132	1	HOOD, EXHAUST	A		(REF MECHANICAL)																
133	1	CONDIMENT & BEVERAGE W/TROUGH	A	2743	762	914	–	–	–	–	–	–	–	–	–	–	–	25	–	–	(A-5, A-8, M-28))
134	1	SALAD BAR, 6 PAN, W/ SNEEZE GUARD	C	3250	1100	900	120	1	–	9.8	–	P	NEMA 6-16P	–	–	–	–	–	–	–	(A-14)
135		NOT USED																			
136	2	CASHIER STATION W/TRAYSLIDES	A	1200	1250	900	120	1	–	–	–	P	NEMA 5-15P	–	–	–	–	–	–	–	
136a	1	CASHIER STATION W/TRAYSLIDE	A	1200	975	900	120	1	–	–	–	P	NEMA 5-15P	–	–	–	–	–	–	–	
137		NOT USED																			
138		NOT USED																			
139		NOT USED																			
140		NOT USED																			
141	1	MECHANICAL COLD PAN	A	1090	600	1046	120	1	–	3.9	–	P	NEMA 5-15P	–	–	–	–	–	–	–	
142	1	OPEN VERTICAL MERCHANDISER	A	1200	800	1950	208	1&3	–	3.5&5	–	H		–	–	–	–	–	–	–	

COMMENTS KEY LIST: (CONTINUATION)

E-1 EVAP UNIT SHALL BE POWERED FROM FREEZER CONDENSING UNIT.

E-2 102V. CIRCUIT REQUIRED FOR DOOR HEATERS, LIGHTS, AND HEAT TRACE.

E-3 120V. CIRCUIT REQUIRED FOR DOOR MAGNETIC DOOR SEAL AND LIGHTS.

E-4 SINGLE POINT POWER CONNECTION TO WALL MOUNTED CONTROL PANEL.

E-5 PROVIDE ATTACHED DISPOSAL UNIT RATED AT 208V, 1P, 0.75KW.

E-6 TWO RECEPTACLES PER OVEN REQUIRED. ONE RECEPTACLE IS FOR ONE 0.75KW

E-7 PROVIDE (2) 120V CIRCUITS FOR CONTROL PANEL.

E-8 PROVIDE 1 ELECTRICAL OUTLET FOR DRAIN STATION AND 1 FOR HEAT LAMP.

E-9 PROVIDE 1 ELECTRICAL OUTLET FOR EACH FRYER, 1 FOR DRAIN STATION, AND 1 FOR HEAT LAMP.

E-10 PROVIDE ONE 208V, 3P CIRCUIT FOR 9KW BOOSTER HEATER, AND ONE 208V, 3P CIRCUIT FOR 4KW MOTOR AND 5KW HEATER, IE TWO CIRCUITS REQUIRED.

E-11 4 WIRES (INCLUDING GROUND) REQUIRED.

E-12 10.7 AMPS SHOWN IS MINIMUM CIRCUIT AMPACITY.

E-13 SINGLE POINT ELECTRICAL CONNECTION.

EQUIPMENT CLASSES	NOTES:
A – CONTRATOR FURNISHED, CONTRACTOR INSTALLED C – GOVERNMENT FURNISHED, GOVERNMENT INSTALLED. L – OTHER H ELECTRICAL HARDWARE CONNECTION REQUIRED	P ELECTRICAL PLUG CONNECTION REQUIRED

EQUIPMENT SIZE KEY:

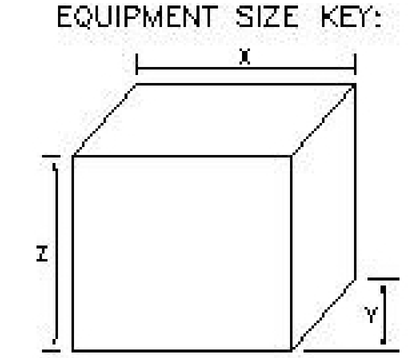

US Army Corps of Engineers
Norfolk District

DESIGNED: SRL
DRAWN:
CHECKED: AES
SUBMITTED: JSW
DATE: OCT.2000
SCALE: AS NOTED
PROJECT NO. 9806K
DRAWING NO. ###
SPECIFICATION NO. ###
Plot date OCT.2000
Plot scale
File name

NORFOLK DISTRICT
CORPS OF ENGINEERS
NORFOLK, VIRGINIA

STANDARD DEFINITIVE DESIGN FOR
ENL. PERSONNEL DINING FACILITY
(150-250 PERSON CAPACITY)

FOOD SERVICE
EQUIPMENT SCHEDULE

SHEET K-3 OF