FM 10-574/TO 13C7-31-31

INCORPORATED C1, C2, C3, C4

AIRDROP OF SUPPLIES AND EQUIPMENT:

RIGGING 950B SCOOP-LOADER

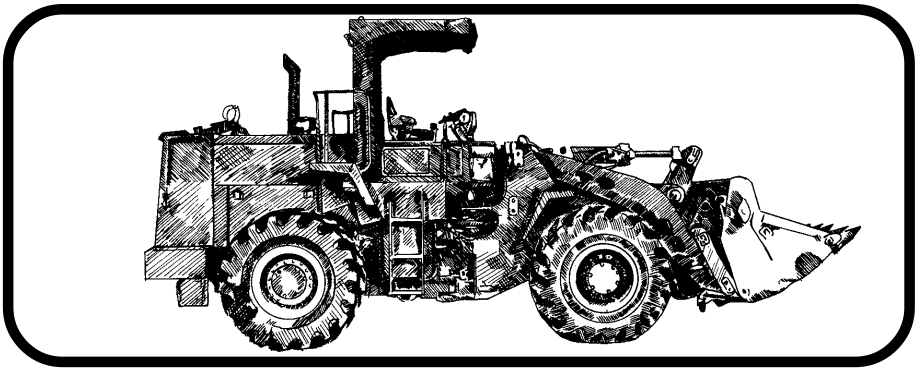

DISTRIBUTION RESTRICTION: Approved for public release; distribution is unlimited.

HEADQUARTERS
DEPARTMENT OF THE ARMY
DEPARTMENTOF THE AIR FORCE

CHANGE
No 4

HEADQUARTERS
DEPARTMENT OF THE ARMY
DEPARTMENT OF THE AIR FORCE
Washington, DC,27 October 1997

AIRDROP OF SUPPLIES AND EQUIPMENT
RIGGING 950B SCOOP-LOADER

This change adds the procedures for rigging the scoop-loader with a 7-foot forklift attachment.

FM 10-574/TO 13C7-31-31, 2 May 1985, is changed as follows:

1. New or changed material is identified by a vertical bar in the margin opposite the changed material.

2. File this transmittal sheet in front of the publication for reference purposes.

3. Remove old pages and insert new pages as indicated below:

Remove old pages	**Insert new pages**
Cover 1	Cover 1
i through v	i through v
	6-1 through 6-39

DISTRIBUTION RESTRICTION. Approved for public release; distribuation is unlimited.

FM 10-574/TO 13C7-31-31

CHANGE
NO. 3

HEADQUARTERS
DEPARTMENT OF THE ARMY
DEPARTMENT OF THE AIR FORCE
Washington, DC, 16 April 1997

AIRDROP OF SUPPLIES AND EQUIPMENT

RIGGING 950B SCOOP-LOADER

This change updates the procedures for rigging the 950B scoop-loader for airdrop on the type V platform. Chapter 5 is added to provide information for rigging the 950B scoop-loader with a five-foot forklift attachment for low-velocity airdrop on the type V platform.

NOTE: The 950B Scoop-loader will no longer be referred to as the Type I and Type II. Chapter 4, Section I, and Chapter 5 reflect this change.

FM 10-574/TO 13C7-3 1-3 1, 2 May 1985, is changed as follows:

1. New or changed material is identified by a vertical bar in the margin opposite the changed material.

2. Remove old pages and insert new pages as indicated below:

Remove old pages	Insert new pages
iii and iv	iii and v
4-1 through 4-4	4-l through 4-4
4- 17 through 4-44	4- 17 through 4-44
4-5 1 through 4-66	4-5 1 through 4-66
	5- 1 through 5-3 1
Glossary- 1	Glossary- 1
References- 1	References- 1

3. File this transmittal sheet in front of the publication for reference purposes.

DISTRIBUTION RESTRICTION. Distribution authorized to US Government agencies only to protect technical or operational information from automatic dissemination under the International Exchange Program or by other means. This determination was made on 30 April 1991. Other requests for this document will be referred to Aerial Delivery and Field Services Department, USA Quartermaster Center and School, 1010 Shop Road, Fort Lee, VA 23801-1502.

DESTRUCTION NOTICE. Destroy by any method that will prevent disclosure of contents or reconstruction of the document.

CHANGE
NO 2

HEADQUARTERS
DEPARTMENTS OF THE ARMY
AND THE AIR FORCE
Washington, DC, 14 June 1990

AIRDROP OF SUPPLIES AND EQUIPMENT:

RIGGING 950B SCOOP-LOADER

This change adds procedures for rigging the type I and II scoop-loaders for airdrop on the type V platform. FM 10-574/TO 13C7-31-31, 2 May 1985, is changed as follows:

1. New or changed material is identified by a vertical bar in the margin opposite the changed material.

2. Remove old pages and insert new pages as indicated below:

Remove pages	Insert pages
i through iii	i through iv
	4-l through 4-113
Glossary- 1	Glossary- 1
References- 1	References- 1

3. File this transmittal sheet in front of the publication for reference purposes.

DISTRIBUTION RESTRICTION. Distribution authorized to U.S. Government agencies only to protect technical or operational information from automatic dissemination under the International Exchange Program or by other means. This determination was made on 5 February 1990. Other requests for this document will be referred to Commander, U.S. Army Quartermaster Center and School (PROV), ATTN: ATSM-DTP, Fort Lee, Virginia 23801-5036.

DESTRUCTION NOTICE. Destroy by any method that will prevent disclosure of contents or reconstruction of the document.

CHANGE
NO 1

DEPARTMENTS OF THE ARMY
AND THE AIR FORCE
Washington, DC, 19 May 1986

AIRDROP OF SUPPLIES AND EQUIPMENT
RIGGING 950B SCOOP-LOADER

This change adds new honeycomb stack configurations and an equipment list to chapter **2.** The change also adds a chapter 3 which provides procedures for rigging the type II, 950B scoop-loader for low-velocity and LAPE airdrops. FM 10-574/TO 13C7-31-31, 2 May 1985, is changed as follows:

1. New or changed material is identified by a vertical bar in the margin opposite the changed material.

2. Remove old pages and insert new pages as indicated below:

Remove pages	**Insert pages**
i through iii	i through iii
l-l	l-l and l-2
2-l through 2-10	2-1 through 2-10
2-15 through 2-18	2-15 through 2-18
2-37 through 2-40	2-37 through 2-40
2-47 through 2-50	2-47 through 2-50
	3-1 through 3-6
References-l	References-l

3. File this transmittal sheet in front of the publication for reference purposes.

DISTRIBUTION RESTRICTION: This publication contains technical or operational information that is for official government use only. Distribution is limited to US government agencies. Requests from outside the US government for release of this publication under the Freedom of Information Act or the Foreign Military Sales Program must be made to Commander, TRADOC, Fort Monroe, VA 23651-5000.

By Order of the Secretary of the Army and Air Force:

DENNIS J. REIMER
General, United States Army
Chief of Staff

Official:

JOEL B. HUDSON
Administrative Assistant to the
Secretary of the Army

DISTRIBUTION:

Active Army, Army National Guard, and U.S. Army Reserve: To be distributed in accordance with the initial distribution number 11383, requirements for FM 10-574.

FIELD MANUAL
NO 10-574
TECHNICAL ORDER
NO 13C7-31-31

HEADQUARTERS
DEPARTMENT OF THE ARMY
DEPARTMENT OF THE AIR FORCE
WASHINGTON, DC, 2 MAY 1985

AIRDROP OF SUPPLIES AND EQUIPMENT:

RIGGING 950B SCOOP LOADER

TABLE OF CONTENTS

		Paragraph	Page
PREFACE			v
CHAPTER 1	INTRODUCTION		
	Description of Items	1-1	1-1
	Special Considerations	1-2	1-2
CHAPTER 2	RIGGING TYPE I SCOOP-LOADER FOR AIRDROP		
Section I	LOW-VELOCITY AIRDROP		
	TYPE II PROCEDURES REMOVED	2-1	2-1
		2-2	2-2
		2-3	2-3
		2-4	2-18
		2-5	2-28
		2-6	2-29
		2-7	2-30
		2-8	2-34
		2-9	2-37
		2-10	2-37
		2-11	2-44
		2-12	2-46
		2-13	2-47
		2-14	2-47
		2-15	2-48
Section II	LAPE AIRDROP		
	REMOVED: 95 MESSAGE TERMINATION OF LAPES	2-16	2-51
		2-17	2-51
		2-18	2-52

DISTRIBUTION RESTRICTION: Approval for public release; distribution is unlimited.

		Paragraph	Page
	REMOVED: 95 MESSAGE TERMINATION OF LAPES	2-19	2-54
		2-20	2-55
		2-21	2-55
		2-22	2-55
		2-23	2-62
		2-24	2-68
		2-25	2-68
		2-26	2-69
CHAPTER 3	RIGGING TYPE II SCOOP-LOADER FOR AIRDROP		
Section I	LOW-VELOCITY AIRDROP		
	TYPE II PROCEDURES REMOVED	3-1	3-1
		3-2	3-1
		3-3	3-1
		3-4	3-1
		3-5	3-2
		3-6	3-2
		3-7	3-2
		3-8	3-2
		3-9	3-2
		3-10	3-2
		3-11	3-2
		3-12	3-2
		3-13	3-2
		3-14	3-2
		3-15	3-2
Section II	LAPE AIRDROP		
	MESSAGE: 95 TERMINATION OF LAPES	3-16	3-4
		3-17	3-4
		3-18	3-4
		3-19	3-4
		3-20	3-5
		3-21	3-5
		3-22	3-5
		3-23	3-5
		3-24	3-5
		3-25	3-5
		3-26	3-6

		Paragraph	Page
CHAPTER 4	RIGGING 950B SCOOP-LOADER FOR AIRDROP ON THE TYPE V PLATFORM		
Section I	LOW-VELOCITY AIRDROP		
	Description of Load.	4-1	4-1
	Preparing Platform.	4-2	4-2
	Preparing and Positioning Honeycomb Stacks.	4-3	4-3
	Preparing Scoop-Loader.	4-4	4-21
	Installing Suspension Slings and Positioning Bucket. . . .	4-5	4-32
	Positioning Scoop-Loader.	4-6	4-33
	Preparing Scoop-Loader After Positioning.	4-7	4-35
	Lashing Scoop-Loader.	4-8	4-39
	Safetying Suspension Slings.	4-9	4-43
	Building and Installing Parachute Stowage Platform. . .	4-10	4-44
	Stowing Cargo Parachutes.	4-11	4-51
	Installing Extraction System.	4-12	4-52
	Installing M-2 Release Assembly.	4-13	4-54
	Placing Extraction Parachutes.	4-14	4-56
	Installing Provisions for Emergency Restraints	4-15	4-57
	Marking Rigged Load.	4-16	4-58
	Equipment Required.	4-17	4-60
Section II	LAPE AIRDROP		
	MESSAGE: 95 TERMINATION OF LAPES	4-18	4-64
		4-19	4-64
		4-20	4-66
		4-21	4-66
		4-22	4-67
		4-23	4-69
		4-24	4-70
		4-25	4-76
		4-26	4-78
		4-27	4-81
		4-28	4-108
		4-29	4-108
CHAPTER 5	RIGGING 950B SCOOP-LOADER WITH A FIVE-FOOT FORKLIFT ATTACHMENT FOR LOW-VELOCITY AIRDROP ON THE TYPE V PLATFROM		
	Description of Load	5-1	5-1
	Preparing Platform	5-2	5-2
	Preparing and Positioning Honeycomb Stacks.	5-3	5-3
	Preparing Scoop-Loader	5-4	5-5
	Installing Lifting Slings	5-5	5-6

	Paragraph	Page
Positioning Scoop-Loader	5-6	5-7
Preparing Scoop-Loader After Positioning	5-7	5-8
Preparing and Positioning Honeycomb Stacks for Lifting Forks	5-8	5-8
Positioning Lifting Forks	5-9	5-9
Lashing Lifting Forks	5-10	5-11
Lashing Scoop-Loader	5-11	5-12
Installing and Safetying Suspension Slings	5-12	5-17
Building and Installing Parachute Stowage Platform	5-13	5-18
Stowing Cargo Parachutes	5-14	5-21
Installing M-2 Release Assembly	5-15	5-22
Installing Extraction System	5-16	5-24
Placing Extraction Parachute	5-17	5-26
Installing Provisions for Emergency Restraints	5-18	5-26
Marking Rigged Load	5-19	5-27
Equipment Required	5-20	5-28

CHAPTER 6 RIGGING THE SCOOP-LOADER WITH A SEVEN-FOOT FORKLIFT ATTACHMENT FOR LOW-VELOCITY AIRDROP ON THE TYPE V PLATFORM

Description of Load	6-1	6-1
Preparing Platform	6-2	6-2
Preparing and Positioning Honeycomb Stacks	6-3	6-3
Preparing Scoop-Loader	6-4	6-8
Installing Lifting Slings	6-5	6-9
Positioning Scoop-Loader	6-6	6-10
Preparing Scoop-Loader After Positioning	6-7	6-11
Preparing and Positioning Honeycomb Stacks for Lifting Forks	6-8	6-11
Positioning Lifting Fork Frame	6-9	6-14
Lashing Lifting Fork Frame	6-10	6-15
Hoisting Lifting Forks	6-11	6-20
Positioning Lifting Forks	6-12	6-21
Securing Lifting Forks	6-13	6-22
Lashing Scoop-Loader to the Platform	6-14	6-25
Building the Parachute Stowage Platform	6-15	6-30
Installing the Parachute Stowage Platform	6-16	6-31
Stowing Cargo Parachutes	6-17	6-32
Installing M-2 Parachute Release Assembly	6-18	6-33
Installing Extraction System	6-19	6-34
Installing Provisions for Emergency Restraints	6-20	6-36
Placing Extraction Parachute	6-21	6-36
Marking Rigged Load	6-22	6-37
Equipment Required	6-23	6-38

GLOSSARY Glossary-1
REFERENCES References-1

PREFACE

SCOPE

This manual tells and shows how to prepare and rig a scoop-loader with a seven-foot forklift attachment on a 28-foot, type V platform for low-velocity airdrop. It is designed for use by all parachute riggers.

USER INFORMATION

The proponent of this publication is HQ TRADOC. You are encouraged to report any errors or omissions and to suggest ways for making this a better manual. Army personnel, send your comments on DA Form 2028 directly to:

Director
Aerial Delivery and Field Services Department
USA Quartermaster Center and School
1010 Shop Road
Fort Lee, Virginia 23801-1502

Air Force personnel, send your reports on AFTO Form 22 through:

Headquarters
Air Mobility Command (AMC/DOKT)
402 Scott Drive, Unit 3AI
Scott AFB, Illinois 62225-5302

Air Force personnel in Special Operations Command, send your reports on AFTO 22 through:

HQ AFSOC/DOXT
100 Bartley St., Suite 260
Hurlburt Field, Florida 32544-5273

to:

Director
Aerial Delivery and Field Services Department
USA Quartermaster Center and School
1010 Shop Road
Fort Lee, Virginia 23801-1502

Also send information copy of AFTO Form 22 to:

SA-ALC/TILDP
450 Quentin Roosevelt Road
Kelly AFB, Texas 78241-6421

Unless this publication states otherwise, masculine nouns and pronouns do not refer exclusively to men.

CHAPTER 1

INTRODUCTION

1-1. Description of Items

The unrigged types I and II scoop-loaders (figure 1-1) are described below.

a. Type I, 950B Scoop-Loader. The unrigged type I, 950B scoop-loader weighs 32,275 pounds with the fuel tank three-fourths full. The weight can be reduced to 30,970 pounds by removing the roll-over protection structure (ROPS), the rear fender, and engine components to be specified in this manual. The length of the scoop-loader is 297 inches, reducible to 292 inches. Its height is 137 inches, reducible to 91 inches. It is 106 inches wide.

b. Type II, 950B Scoop-Loader. The unrigged type II, 950B scoop-loader weighs 32,880 pounds with the fuel tank three-fourths full. The weight can be reduced to 31,340 pounds by removing the ROPS, sectionalization kit, and engine compartment lower doors. The length of the scoop-loader is 297 inches, reducible to 292 inches. Its height is 137 inches, reducible to 91 inches. It is 106 inches wide.

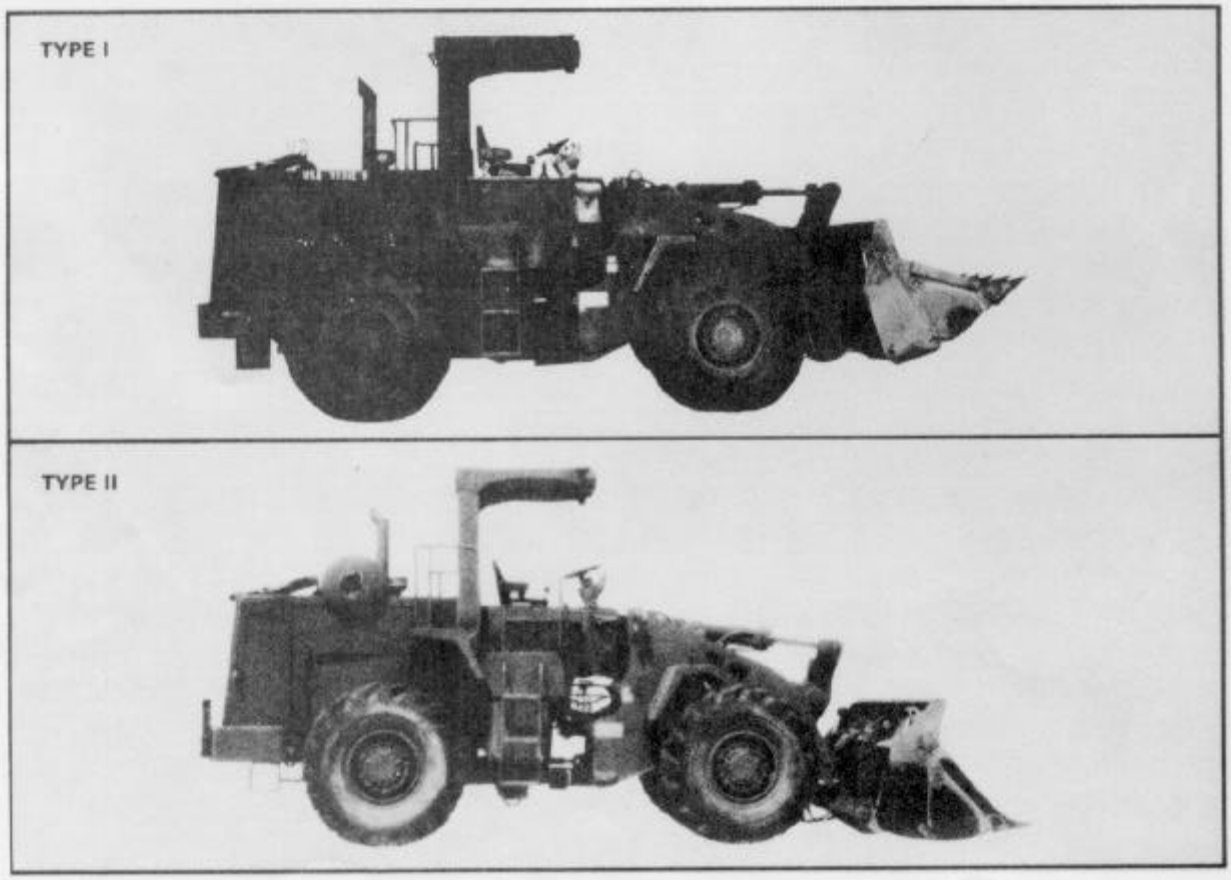

Figure 1-1. The unrigged types I and II, 950B scoop-loaders.

1-2. Special Considerations

The loads covered in this manual may include hazardous materials as defined in AFR 71-4/TM 38-250. If included, the hazardous materials must be packaged, marked, and labeled as required in AFR 71-4/TM 38-250. A copy of this manual must be available to the joint airdrop inspectors during the before- and after-loading inspections.

CHAPTER 4

RIGGING 950B SCOOP-LOADER FOR AIRDROP ON THE TYPE V PLATFORM

Section I

LOW-VELOCITY AIRDROP

4-1. Description of Load

The 950B scoop-loader is rigged on a 24-foot, type V platform for low-velocity airdrop. The load requires eight G-11 cargo parachutes with a line bag. A drawing of a 950B scoop-loader with tiedown provisions is shown in Figure 4-1.

Note: This drawing is not drawn to scale.

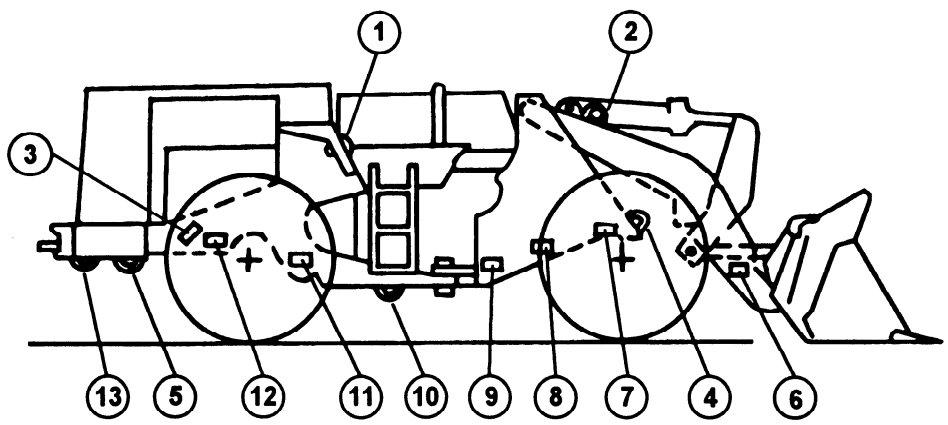

1. Rear suspension point
2. Front suspension point
3. Rear lift eye
4. Front lift eye
5. Air transport trailer hitch
6. Tiedown provision 1
7. Tiedown provision 2
8. Tiedown provision 3
9. Tiedown provision 4
10. Tiedown provision 5
11. Tiedown provision 6
12. Tiedown provision 7
13. Tiedown provision 8

Figure 4-1. Scoop-loader with tiedown provisions

4-2. Preparing Platform

Prepare a 24-foot, type V airdrop platform using 54 tiedown clevises as shown in Figure 4-2.

Note: The nose bumper may or may not be installed.

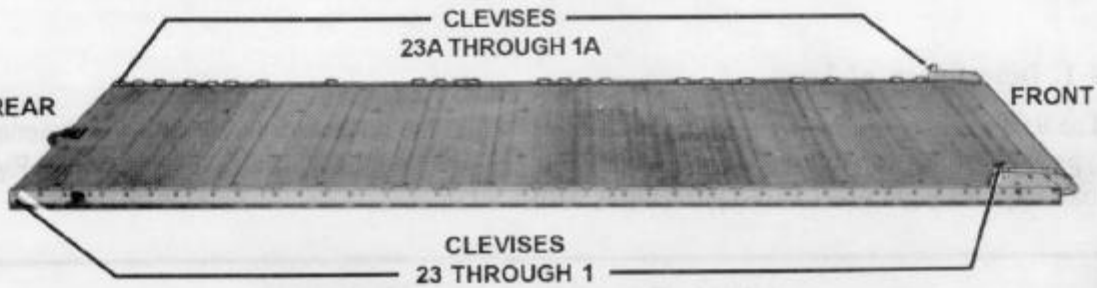

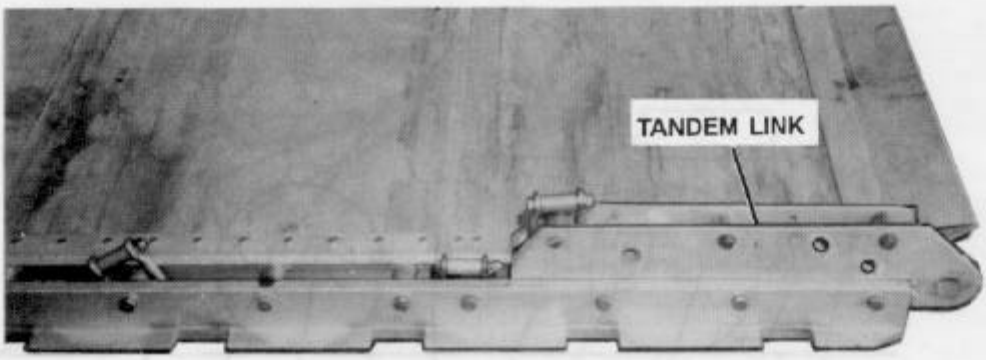

Step:

1. Inspect, or assemble and inspect, the platform as outlined in TM 10-1670-268-20&P/TO 13C7-52-22.
2. Install a tandem link to the front of each platform side rail using bushing holes 1, 2, and 3.
3. Install a clevis on bushing 4 on each front tandem link.
4. Starting at the front of the platform side rail, install clevises in each platform side rail using the bushings bolted on holes 4, 8, 10, 13, 15, 16, 21, 22, 23, 24, 28, 29, 30, 31, 36, 40, 42, 43, *44, 46, 47, and *48.
5. Starting at the front of the platform, number the clevises bolted to the right rail from 1 through 23 and those bolted to the left rail from 1A through 23A as outlined in FM 10-500-2/TO 13C7-1-5.

** Denotes a double clevis (not shown). Install a double clevis according to FM 10-500-2/TO 13C7-1-5.*

Figure 4-2. Platform prepared

4-3. Preparing and Positioning Honeycomb Stacks

Prepare the honeycomb stacks as shown in Figures 4-3 through 4-14. Position them on the platform according to Figures 4-15, 4-16, and 4-17.

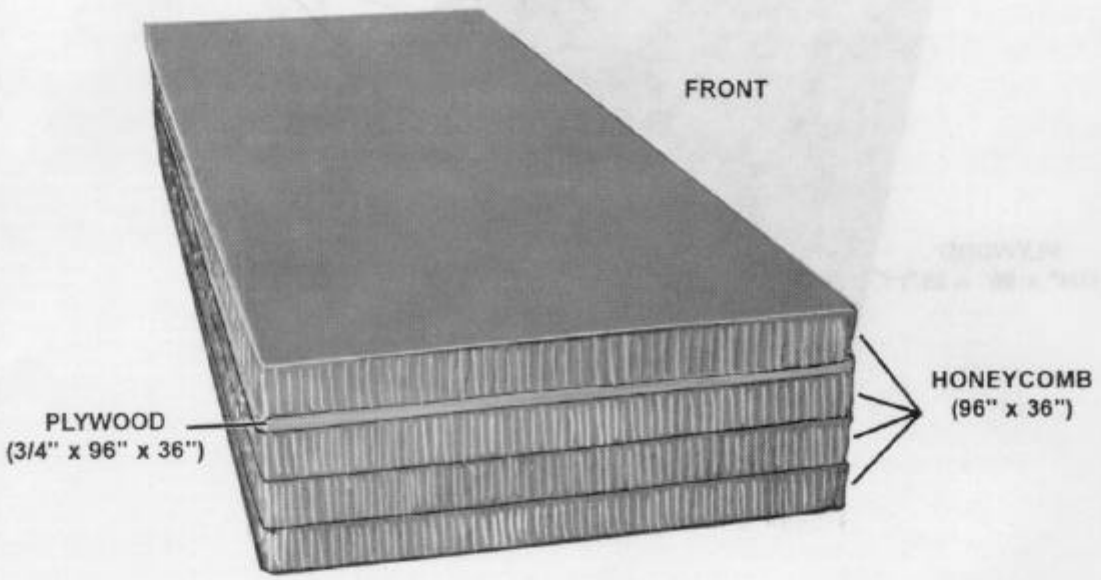

Stack Number	Pieces	Width (Inches)	Length (Inches)	Material	Instructions
1	3	96	36	Honeycomb	Form base.
	1	96	36	3/4-inch plywood	Glue plywood on top of base.
	1	96	36	Honeycomb	Glue on top of the plywood.

Figure 4-3. Honeycomb stack 1 prepared

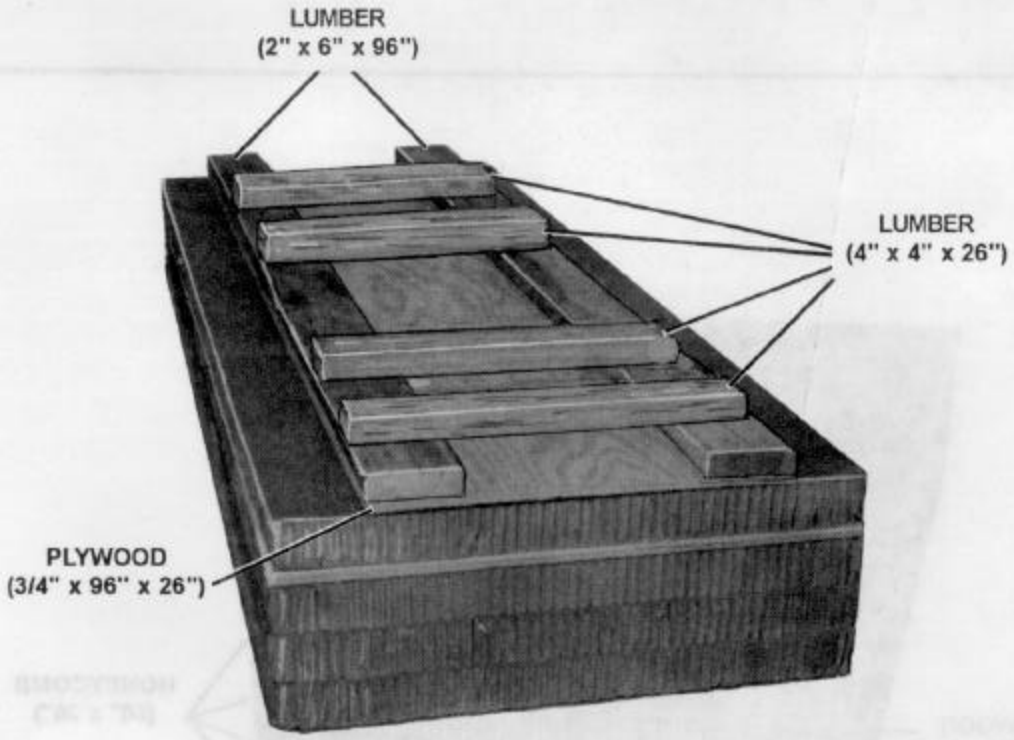

Stack Number	Pieces	Width (Inches)	Length (Inches)	Material	Instructions
1	1	96	26	3/4-inch plywood	Glue on top of honeycomb center.
	2	96	6	2- by 6-inch lumber	Nail one piece flush with the front edge of the plywood using eightpenny nails. Nail one piece flush with the rear edge of the plywood using eightpenny nails.
	4	3 1/2 (actual)	26	4- by 4-inch lumber	Place lumber temporarily on top of the 2- by 6-inch lumber.

Figure 4-3. Honeycomb stack 1 prepared (continued)

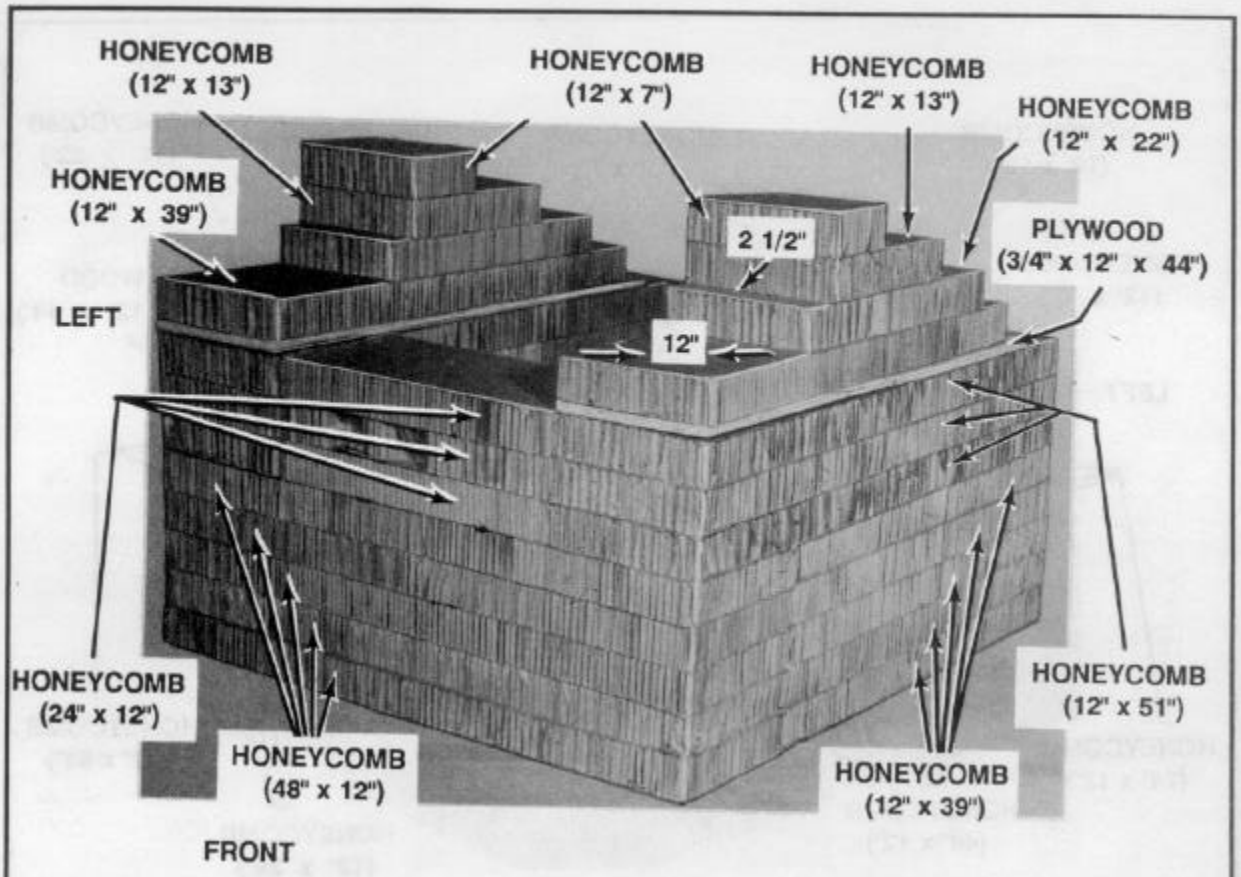

Stack Number	Pieces	Width (Inches)	Length (Inches)	Material	Instructions
2	5	48	12	Honeycomb	Form front base of stack.
	10	12	39	Honeycomb	Place five pieces flush with the left rear edge and five pieces flush with the right rear edge to form the "U" of the stack.
	6	12	51	Honeycomb	Place three pieces on each side of the base stack.
	3	24	12	Honeycomb	Place pieces on the front of the stack.
	2	12	44	3/4-inch plywood	Lay one piece on each side of the base stack, flush with the front edge.
	2	12	39	Honeycomb	Lay one piece on each piece of plywood, flush with the front edge.

Figure 4-4. Honeycomb stack 2 prepared

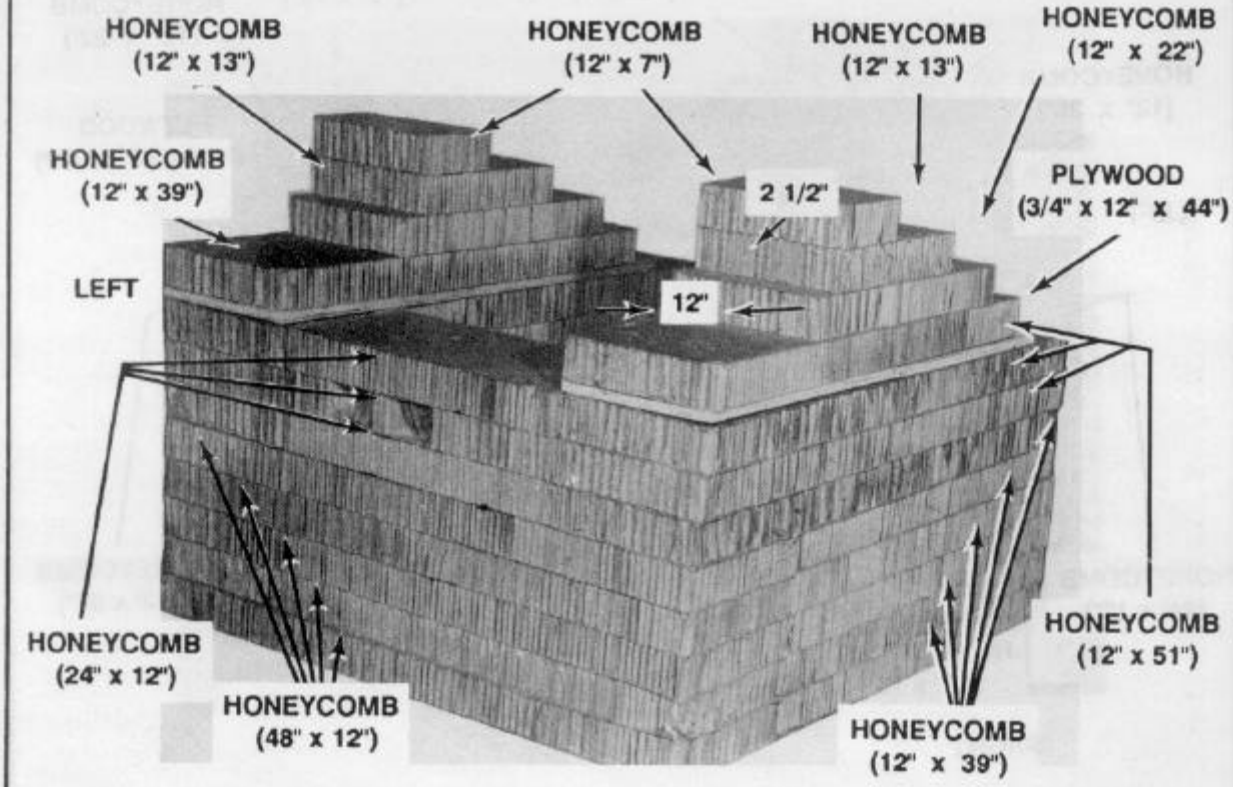

Stack Number	Pieces	Width (Inches)	Length (Inches)	Material	Instructions
2	2	12	22	Honeycomb	Lay one piece on each side of the stack, 12 inches from the front edge of the 12- by 39-inch honeycomb.
	2	12	13	Honeycomb	Lay one piece on each side of the stack, 2 1/2 inches from the front edge of the 12- by 22-inch honeycomb.
	2	12	7	Honeycomb	Lay one piece on each side of the stack, flush with the front edge of the 12- by 13-inch honeycomb.

Figure 4-4. Honeycomb stack 2 prepared (continued)

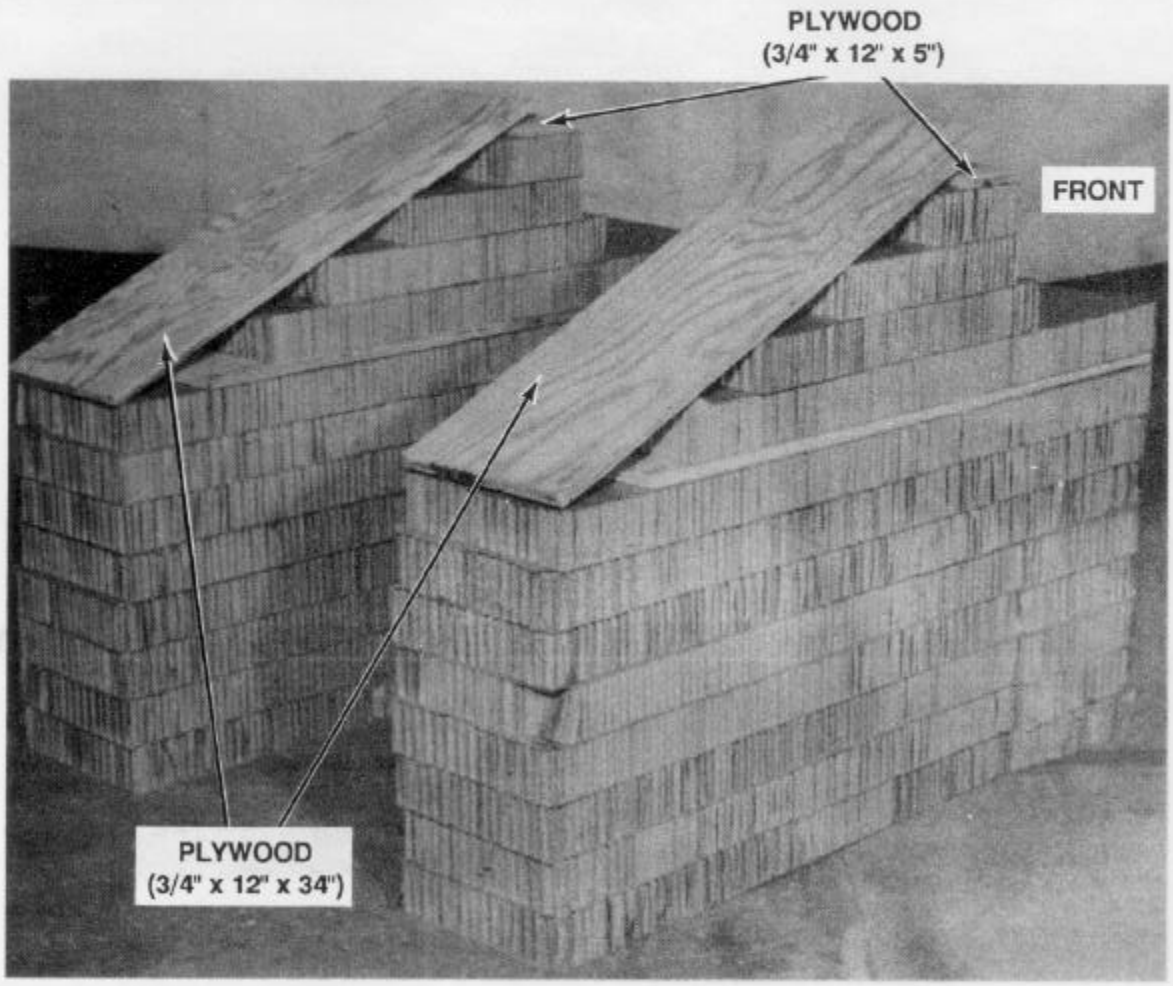

Stack Number	Pieces	Width (Inches)	Length (Inches)	Material	Instructions
2	2	12	5	3/4-inch plywood	Lay one piece on each side of the stack, flush with the front edge of the 12- by 7-inch honeycomb.
	2	12	34	3/4-inch plywood	Lay one piece on each side of the stack at an incline on the rear edges of the 8th through 12th layers of honeycomb, even with the rear of the stack.

Figure 4-4. Honeycomb stack 2 prepared (continued)

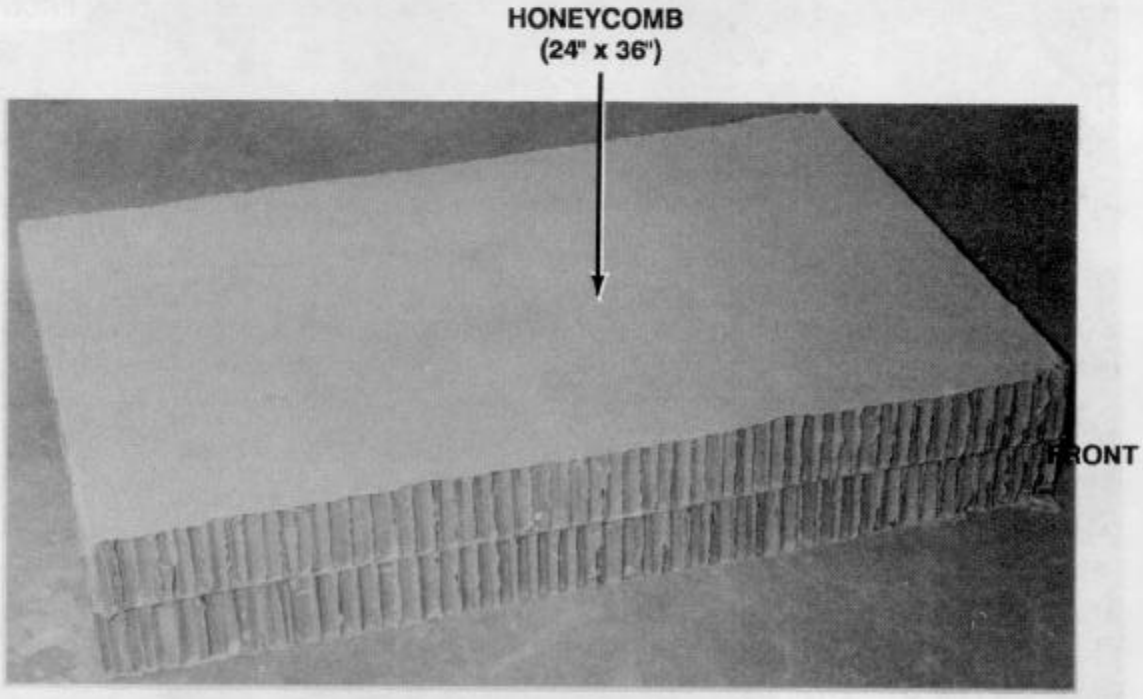

Stack Number	Pieces	Width (Inches)	Length (Inches)	Material	Instructions
3	2	24	36	Honeycomb	Form stack.
4	2	24	36	Honeycomb	Form stack.
10	2	24	36	Honeycomb	Form stack.
11	2	24	36	Honeycomb	Form stack.

Figure 4-5. Honeycomb stacks 3, 4, 10, and 11 prepared

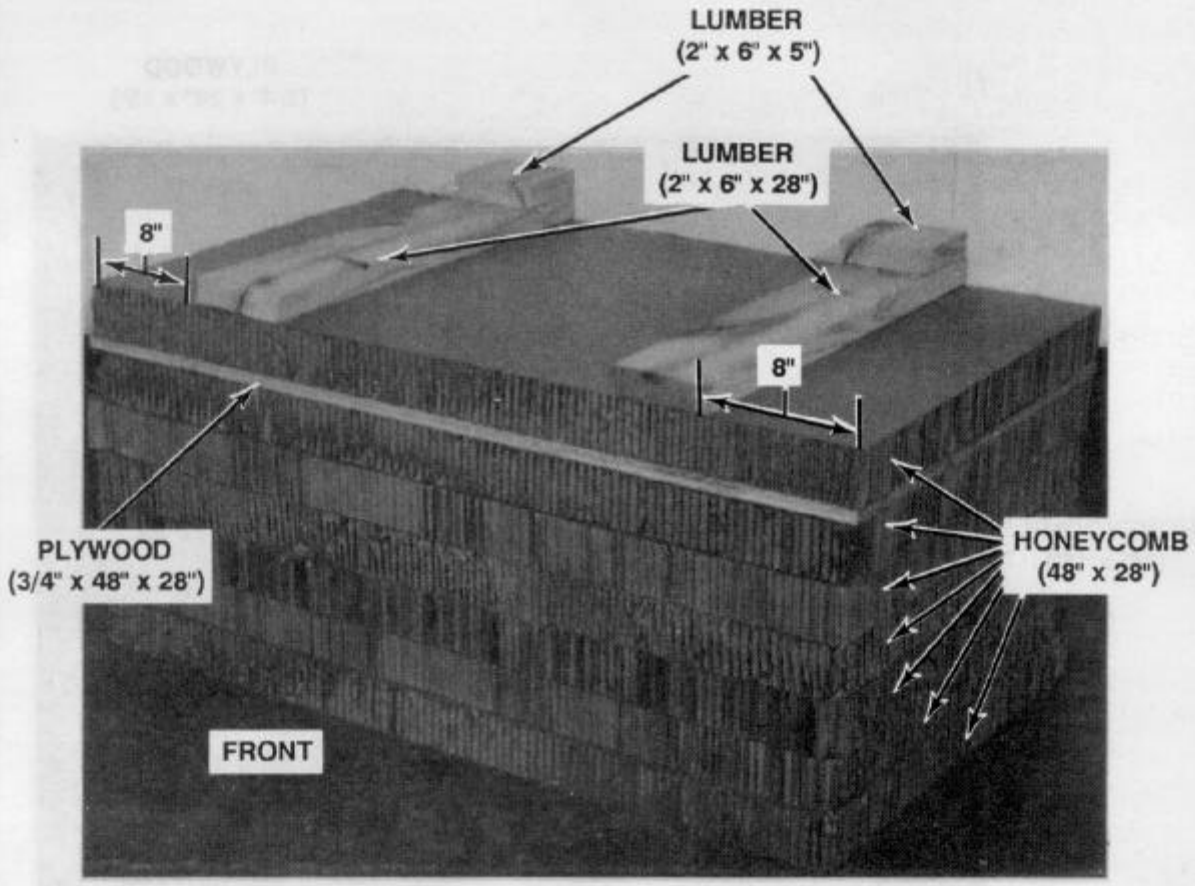

Stack Number	Pieces	Width (Inches)	Length (Inches)	Material	Instructions
5	7	48	28	Honeycomb	Form stack.
	1	48	28	3/4-inch plywood	Place plywood under top layer of honeycomb.
	2	6	28	2- by 6-inch lumber	Place each piece front to rear 8 inches from the sides of the stack.
	2	6	5	2- by 6-inch lumber	Place one piece on the top rear edge of each 28-inch piece of lumber.

Figure 4-6. Honeycomb stack 5 prepared

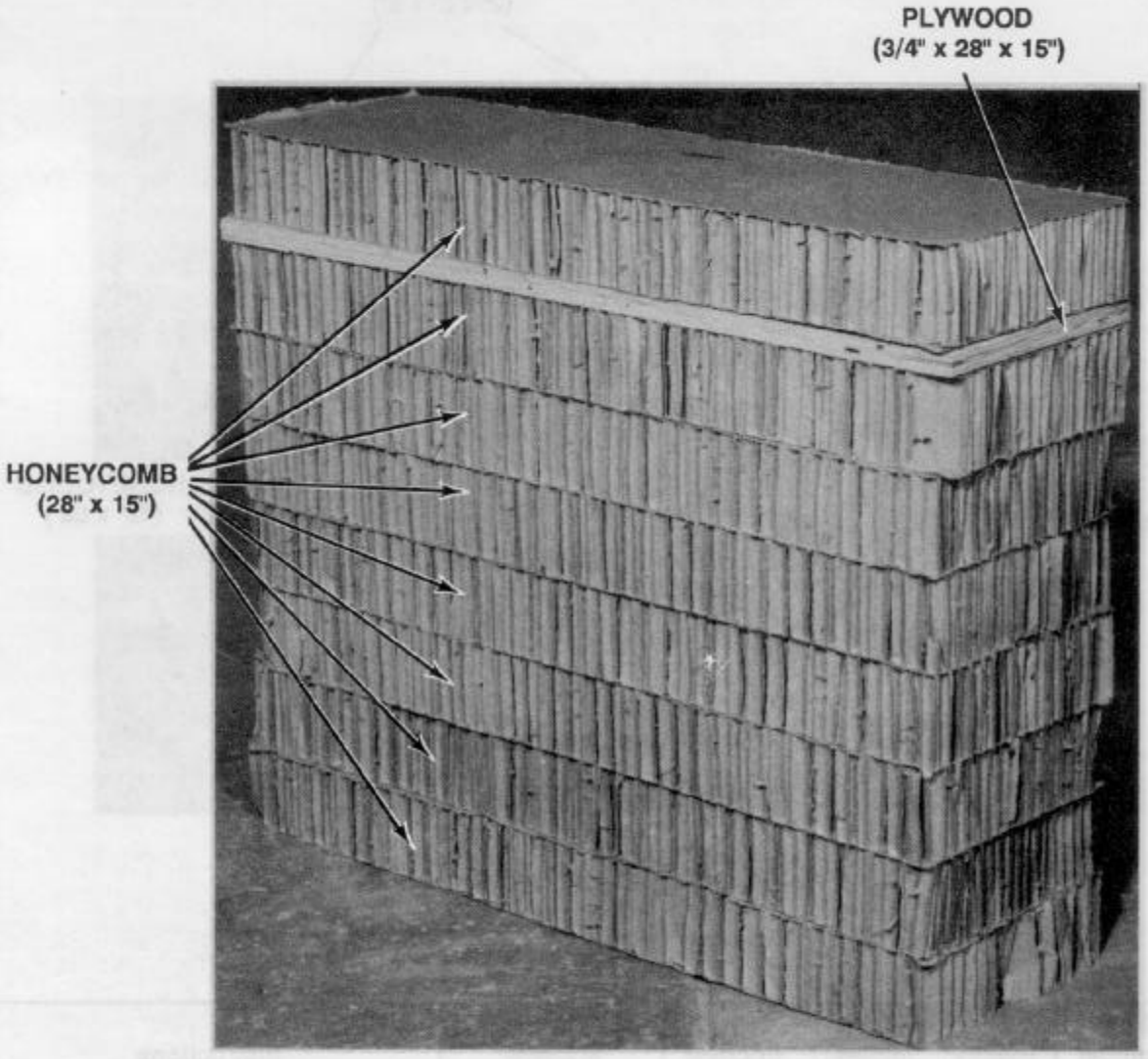

Stack Number	Pieces	Width (Inches)	Length (Inches)	Material	Instructions
6	8	28	15	Honeycomb	Form stack.
	1	28	15	3/4-inch plywood	Place plywood under the top layer of honeycomb.

Figure 4-7. Honeycomb stack 6 prepared

Note: This drawing is not drawn to scale.

FIRST FRAME SUPPORT

TOP VIEW

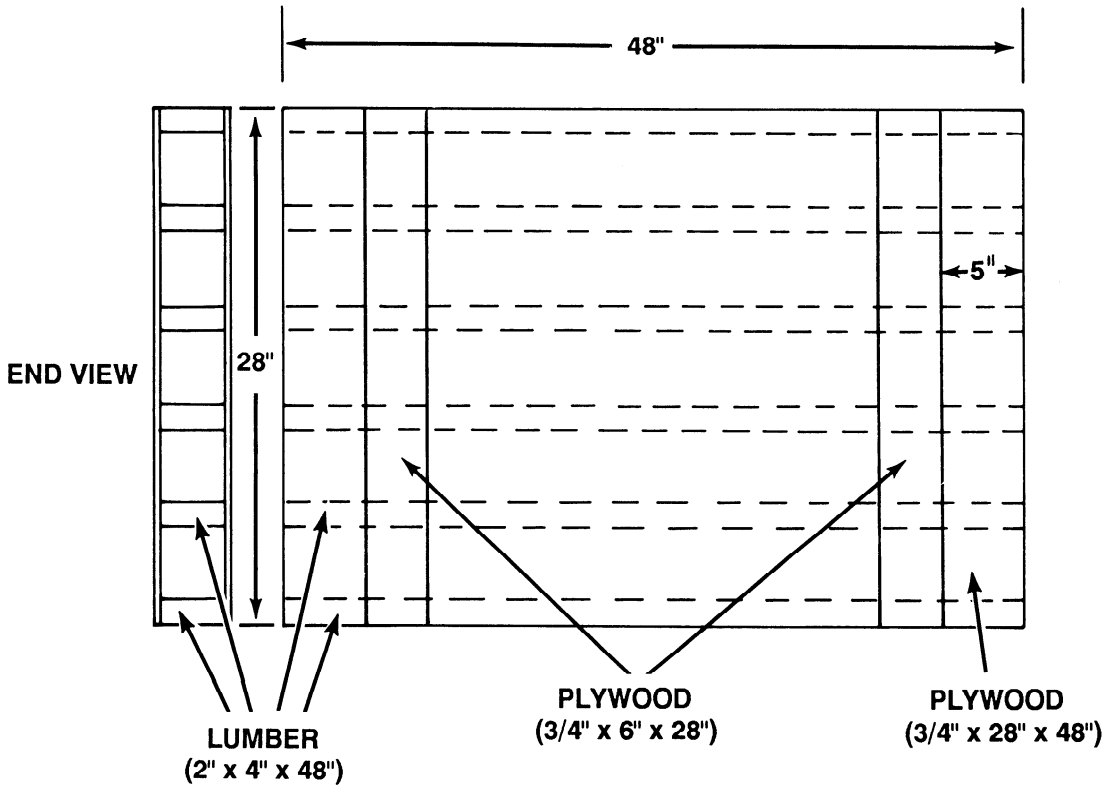

Step:

1. Use six 2- by 4- by 48-inch pieces of lumber, two 3/4- by 28- by 48-inch pieces of plywood, and two 3/4- by 6- by 28-inch pieces of plywood to build this frame support.
2. Lay the lumber on its 2-inch side, and evenly space it between the two large pieces of plywood. Nail the lumber in place using eightpenny nails. Nail a 3/4- by 6- by 28-inch piece of plywood 5 inches from the top edge of each end of the plywood using eightpenny nails.

Figure 4-8. Frame support built for stack 7

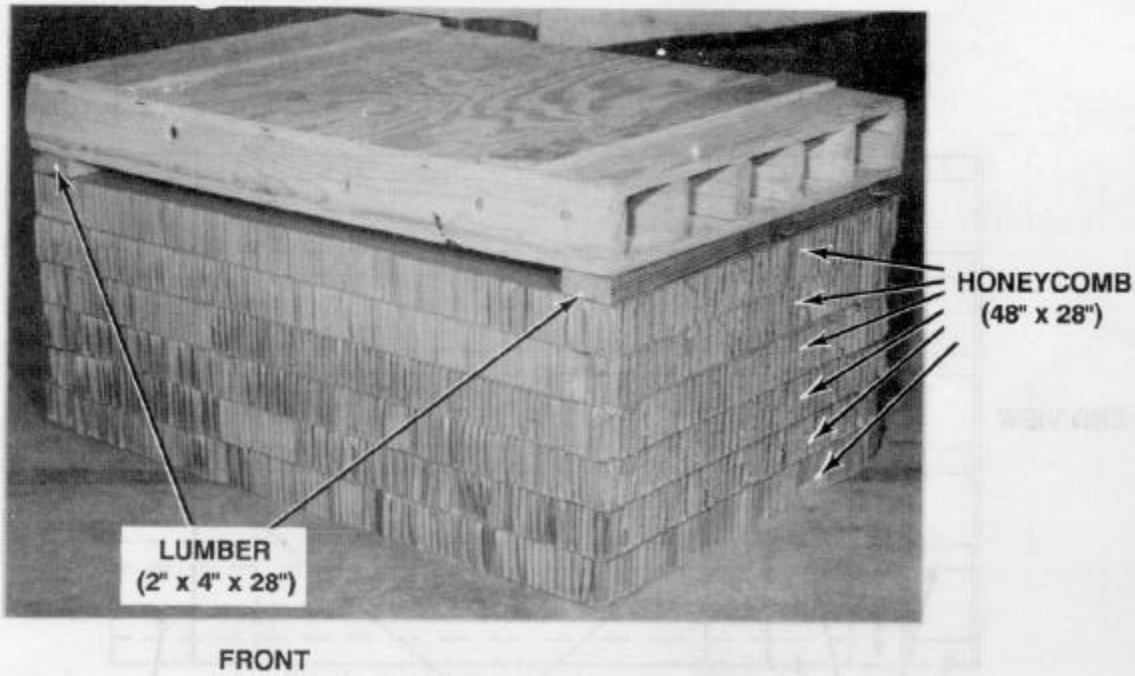

Stack Number	Pieces	Width (Inches)	Length (Inches)	Material	Instructions
7	6	48	28	Honeycomb	Form stack.
	2	4	28	2- by 4-inch lumber	Glue one piece along each side on top of the stack.
				Frame support	Glue the frame support to the 2- by 4-inch lumber on top of the stack.

Figure 4-9. Honeycomb stack 7 prepared

Note: This drawing is not drawn to scale.

SECOND FRAME SUPPORT

TOP VIEW

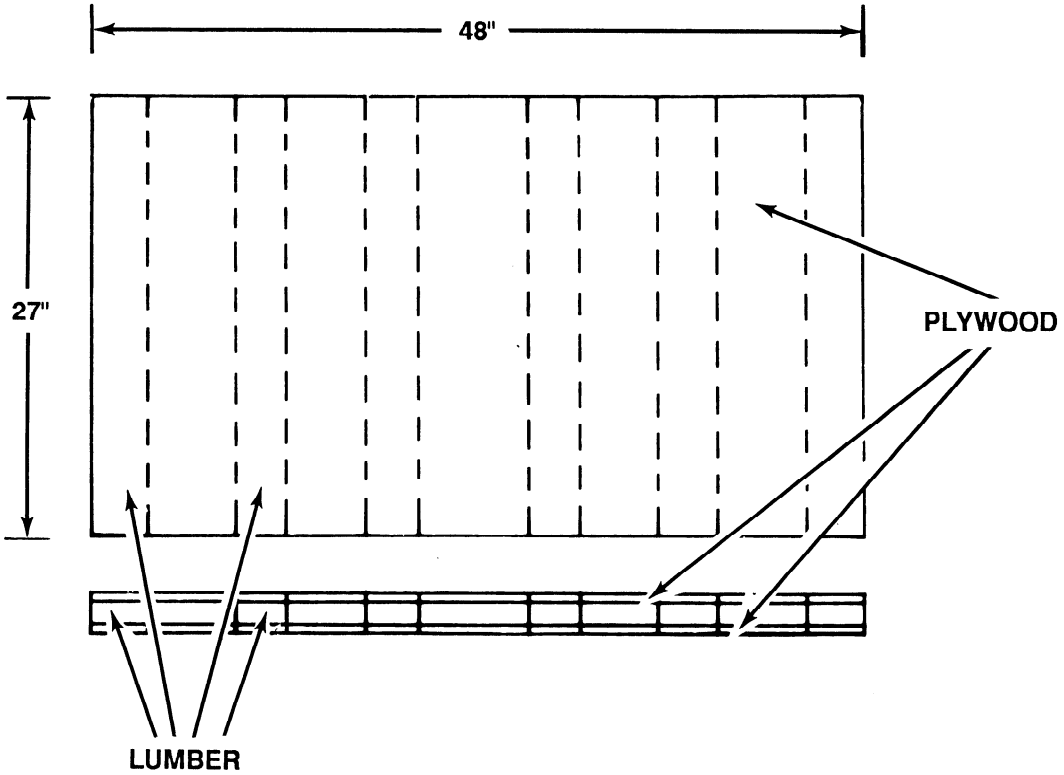

SIDE VIEW

Step:

1. Use six 2- by 4- by 27-inch pieces of lumber and two 3/4- by 27- by 48-inch pieces of plywood to build this frame support.
2. Lay the lumber on its 4-inch side, and evenly space it between the two pieces of plywood. Nail the lumber in place using eightpenny nails.

Figure 4-10. Frame support built for stack 8

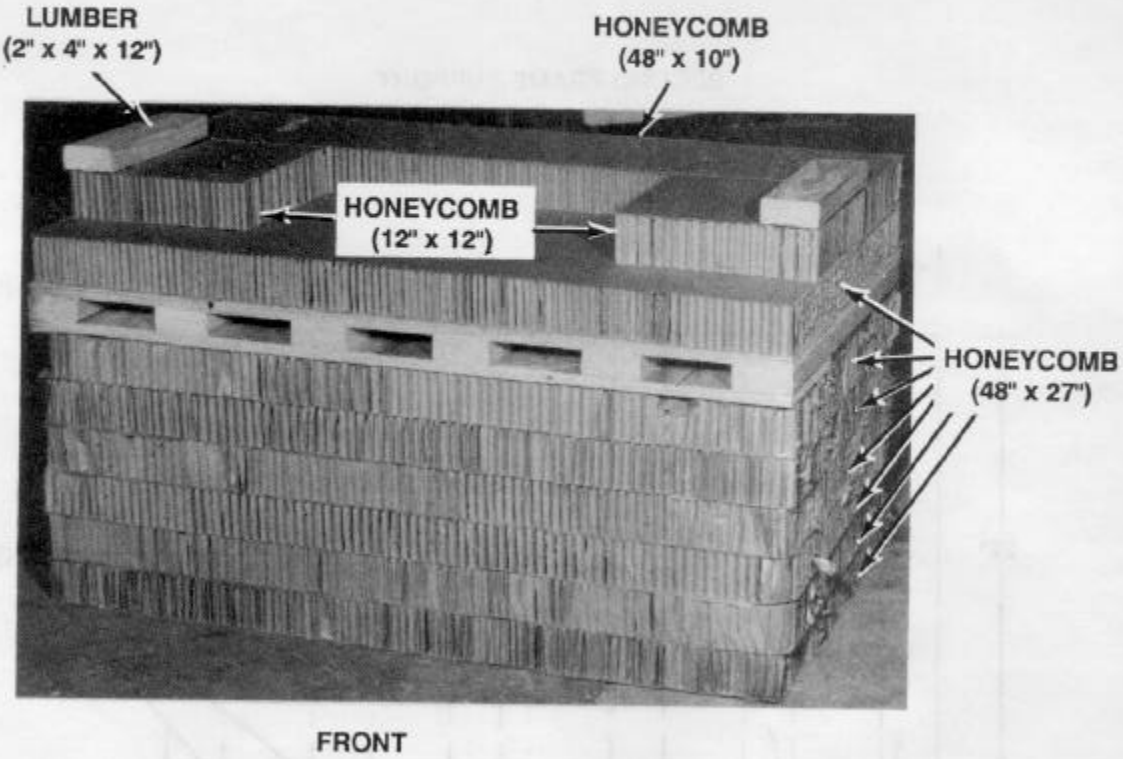

Stack Number	Pieces	Width (Inches)	Length (Inches)	Material	Instructions
8	7	48	27	Honeycomb	Form stack.
				Frame support	Place frame support under top layer of honeycomb.
	1	48	10	Honeycomb	Place honeycomb flush with rear edge of base.
	2	12	12	Honeycomb	Place one piece of honeycomb along each side, 5 inches from front edge of stack.
	2	4	12	2- by 4-inch lumber	Lay one piece of lumber along the outside edge of each piece of 12- by 12-inch honeycomb.

Figure 4-11. Honeycomb stack 8 prepared

Note: This drawing is not drawn to scale.

THIRD FRAME SUPPORT

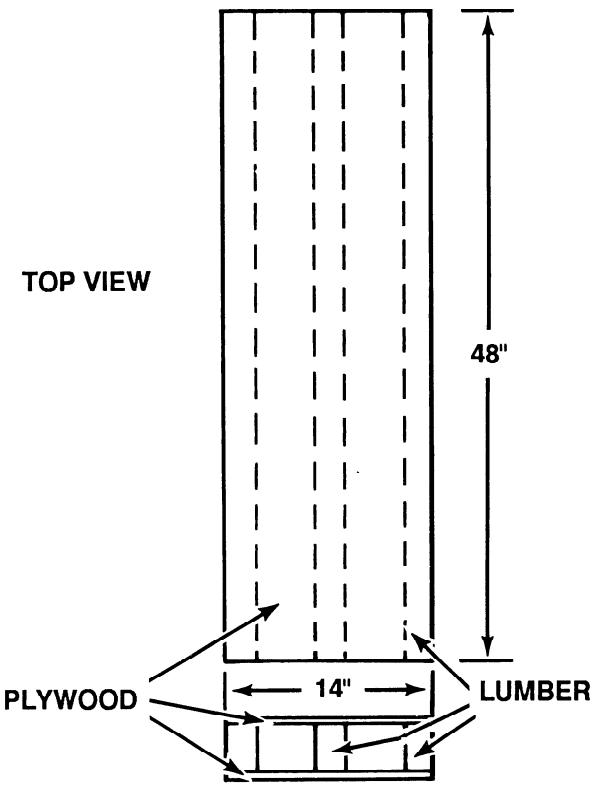

Step:

1. Use three 2- by 4- by 48-inch pieces of lumber and two 3/4- by 14- by 48-inch pieces of plywood to build this frame support.
2. Lay the lumber on its 2-inch side, and evenly space it between the two pieces of plywood. Nail the lumber in place using eightpenny nails.

Figure 4-12. Frame support built for stack 9

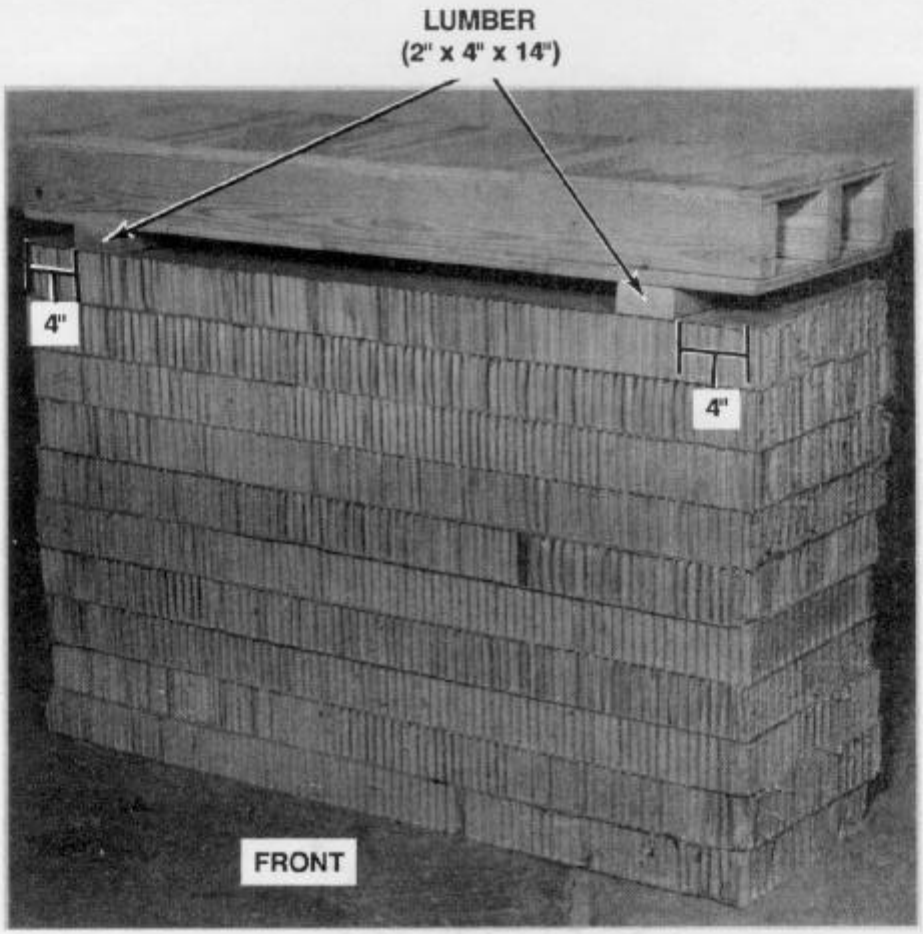

Stack Number	Pieces	Width (Inches)	Length (Inches)	Material	Instructions
9	10	48	14	Honeycomb	Form stack.
	2	4	14	2- by 4-inch lumber	Glue one piece 4 inches from each side of the stack.
				Frame support	Set frame support on 2- by 4-inch lumber.

Figure 4-13. Honeycomb stack 9 prepared

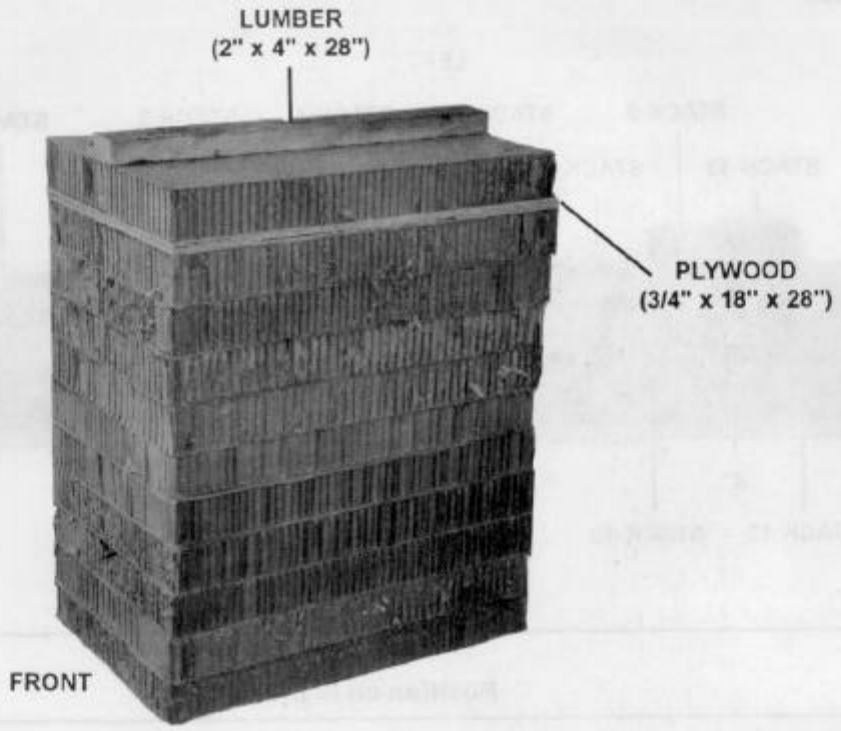

Stack Number	Pieces	Width (Inches)	Length (Inches)	Material	Instructions
12	11	18	28	Honeycomb	Form stack.
	1	18	28	3/4-inch plywood	Place plywood under the top layer of honeycomb.
	1	4	28	2- by 4-inch lumber	Center lumber on top of the stack.
13	11	18	28	Honeycomb	Form stack.
	1	18	28	3/4-inch plywood	Place plywood under the top layer of honeycomb.
	1	4	28	2- by 4-inch lumber	Center lumber on top of the stack.

Figure 4-14. Honeycomb stacks 12 and 13 prepared

Notes: 1. *Measurements from the front of the platform are taken from the front edge of the first panel or the crease of the nose bumper, NOT from the front edge of the nose bumper.*
2. *Measurements from the rear of the platform are taken from the rear edge of the last panel.*

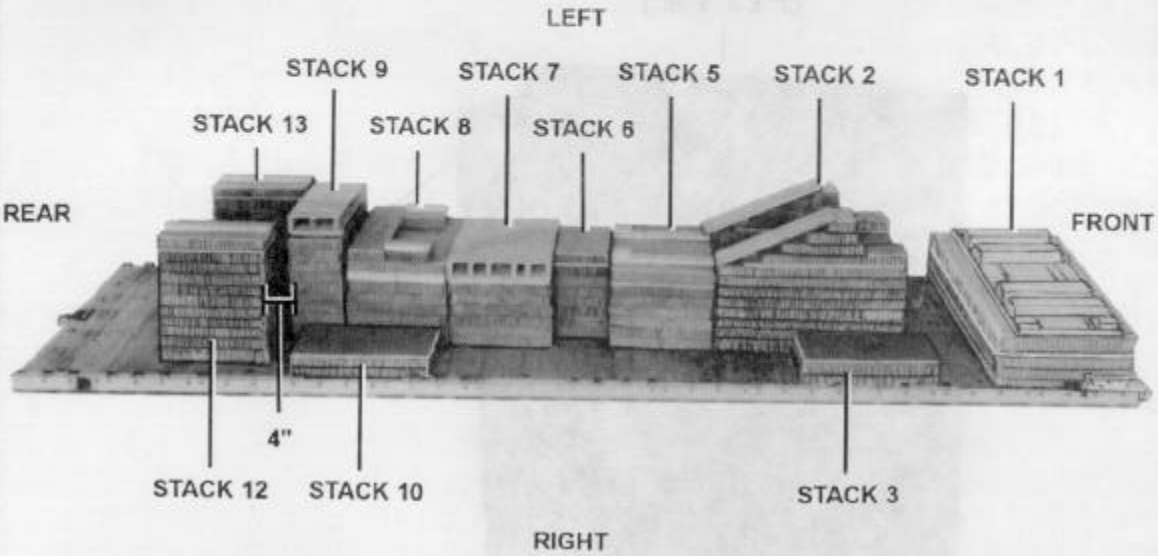

Stack Number	Position on Platform
	Place stack:
1	Centered flush with front edge of the platform.
2	Centered 28 inches from stack 1.
3	18 inches from stack 1, flush against right side of stack 2.
4	18 inches from stack 1, flush against left side of stack 2.
5	Centered flush against stack 2.
6	Centered flush against stack 5.
7	Centered flush against stack 6.
8	Centered flush against stack 7.
9	Centered flush against stack 8.
10	89 inches from stack 3, flush against right side of stack 8.
11	89 inches from stack 4, flush against left side of stack 8.
12	4 inches from stack 9, 16 inches from right rail.
13	4 inches from stack 9, 16 inches from left rail.

Figure 4-15. Honeycomb stacks positioned on platform

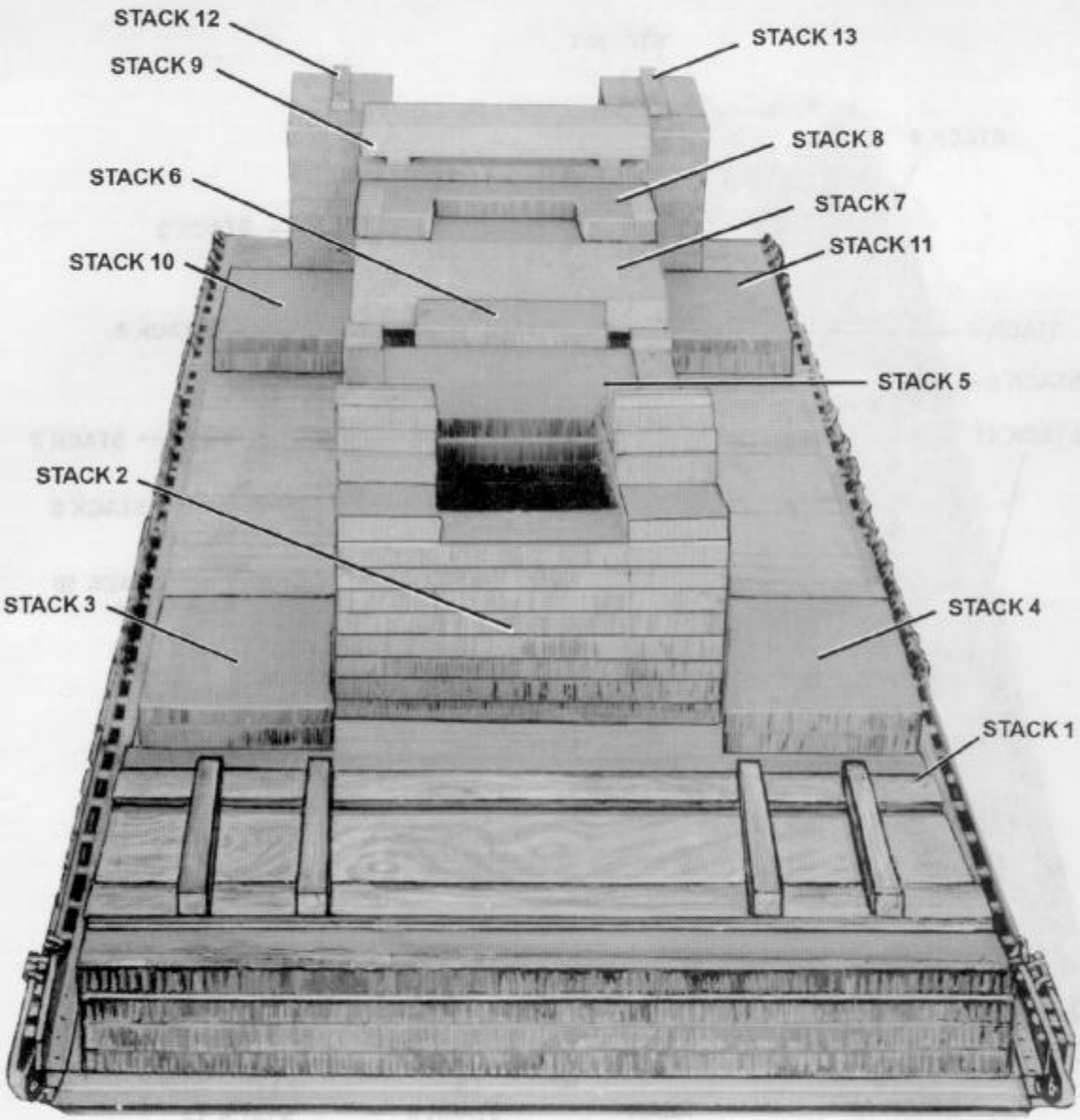

Figure 4-16. Front view of honeycomb stacks positioned on platform

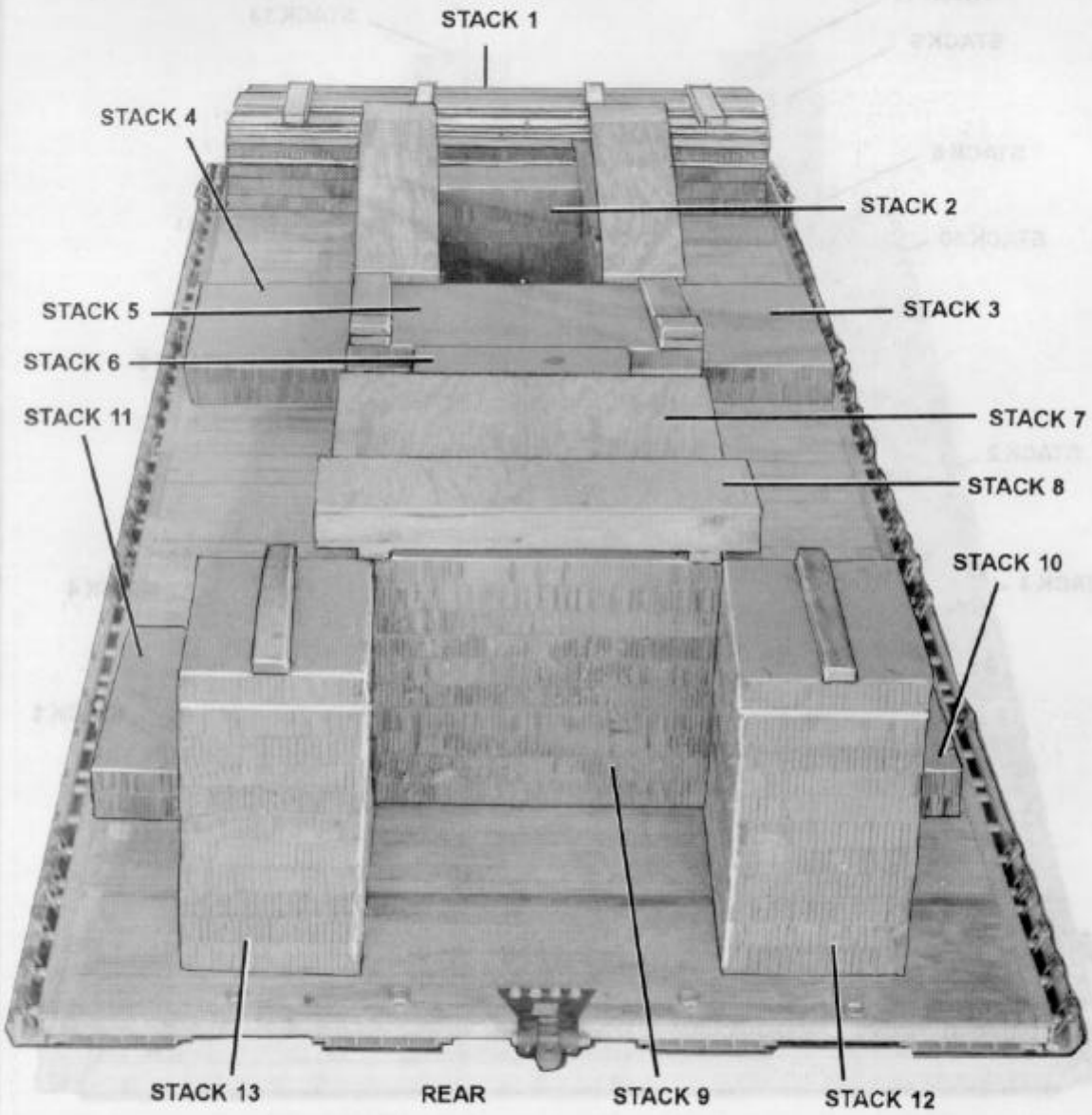

Figure 4-17. Rear view of honeycomb stacks positioned on platform

4-4. Preparing Scoop-Loader

Prepare the 950B scoop-loader as given below except do not remove the engine doors.

a. Adjusting Tire Pressure. Adjust the tire pressure to 20 psi.

b. Removing Components. Remove the components as shown in Figure 4-18.

CAUTION
Ensure that all items are removed by qualified operators or maintenance personnel. Ensure the fuel tank is no more than 3/4 full.

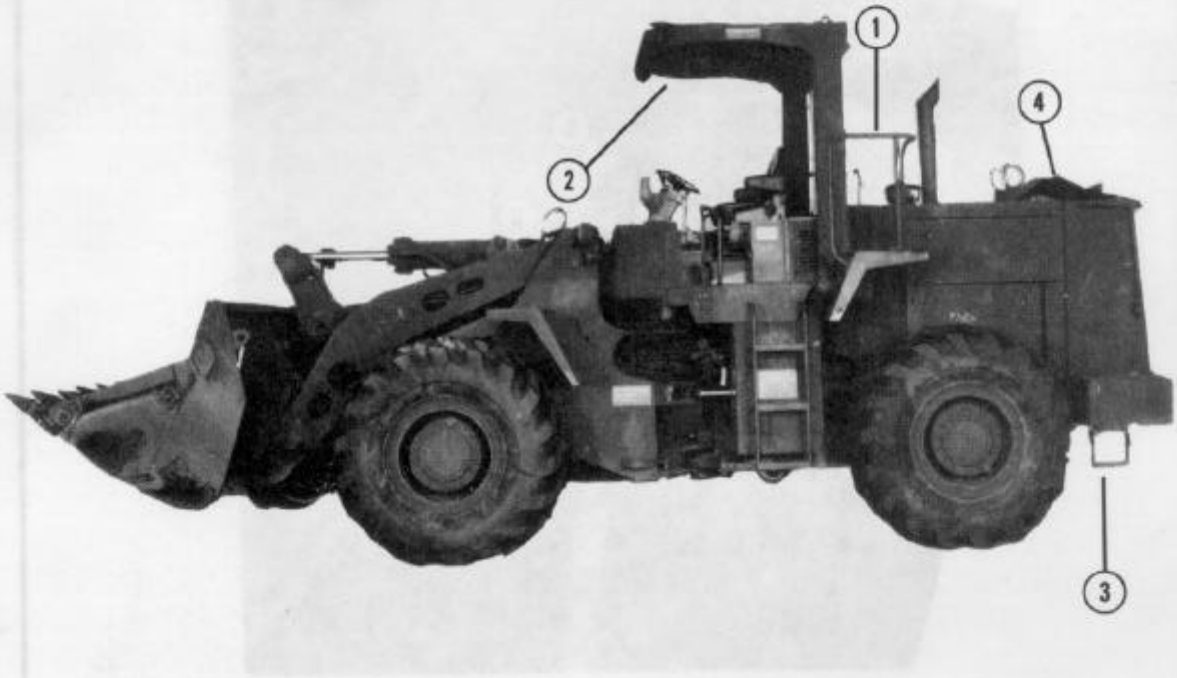

Note: Items 1 and 2 listed below WILL NOT be airdropped with the load.

1. Remove the large handrails.
2. Make sure all electrical wiring is disconnected; then remove the ROPS.
3. Remove the rear step on each side of the scoop-loader. Store them in the equipment stowage box.
4. Remove the CST and triangle brace from the top rear of the vehicle. (The CST and triangle brace will be used later to store other vehicle components.)

Figure 4-18. Components removed

(5) Remove the rear suspension provisions (eyelets) from the equipment stowage box behind the driver's seat.

(6) Use the ROPS attaching bolts to bolt the suspension provisions to the ROPS attaching points. Ensure each bolt is torqued to 640 foot-pounds, plus or minus 80 foot-pounds.

Figure 4-18. Components removed (continued)

(7) Remove the rear turning signal lights (not shown) from the sides of the engine compartment. Wrap them in cellulose wadding, and stow them in the equipment stowage box.

Figure 4-18. Components removed (continued)

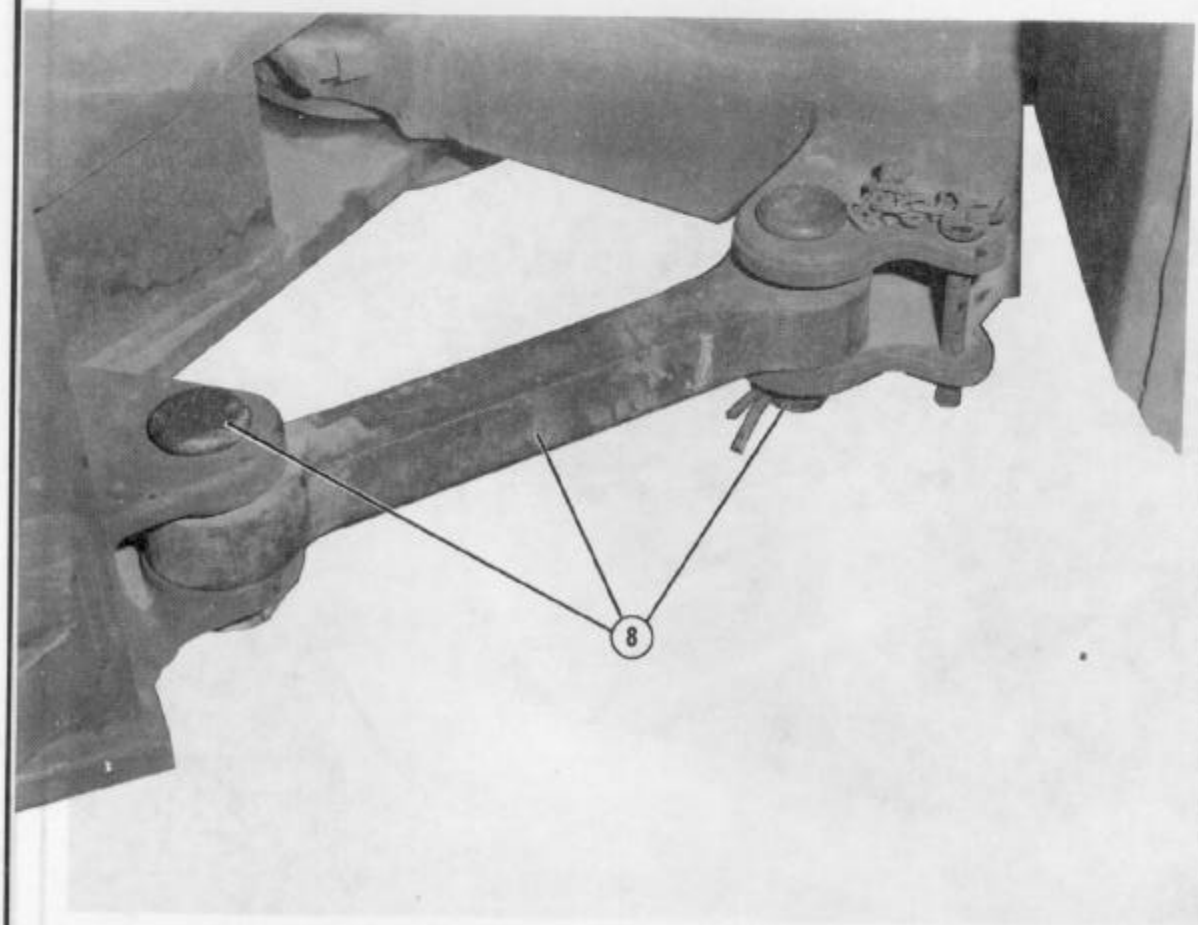

(8) Lock the articulating joint with the safety link and locking pins.

(9) Remove the steering wheel (not shown).

(10) Remove the air precleaner and exhaust stack (not shown).

Note: The items removed in step 10 will be stowed on the CST.

Figure 4-18. Components removed (continued)

c. Stowing Components. Place and secure the CST, exhaust stack, and air precleaner as shown in Figures 4-19, and 4-20.

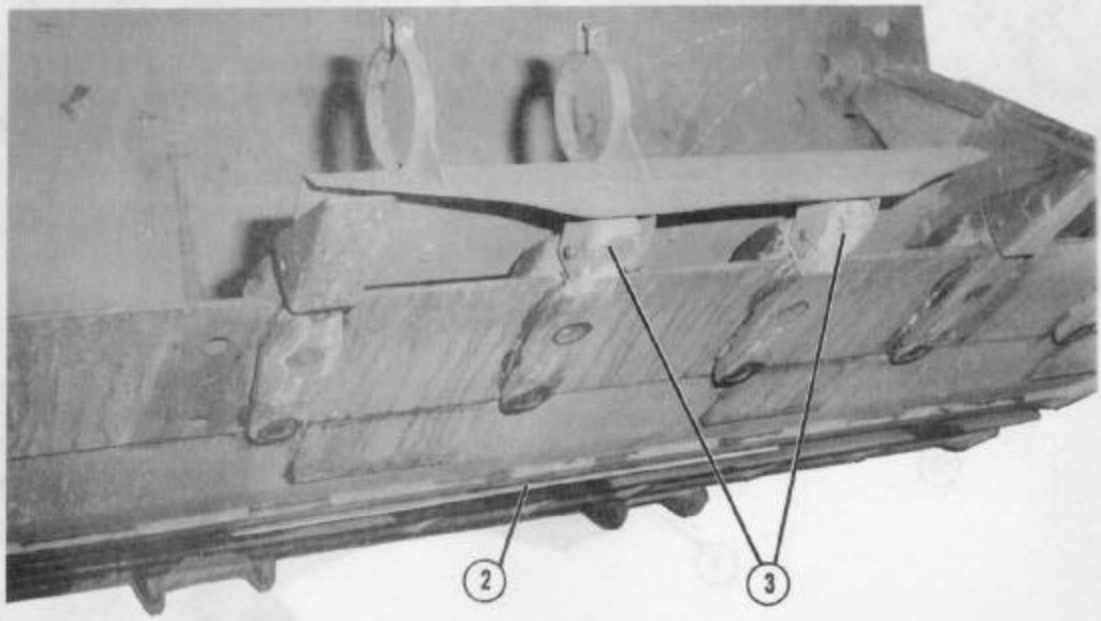

1. Remove the two middle teeth from the bucket (not shown).
2. Open the bucket slightly. Hook the rear of the CST into the open bucket.
3. Align the CST attaching brackets with the holes in the teeth. Insert the pins in the brackets. Close the bucket.

Figure 4-19. CST secured to bucket

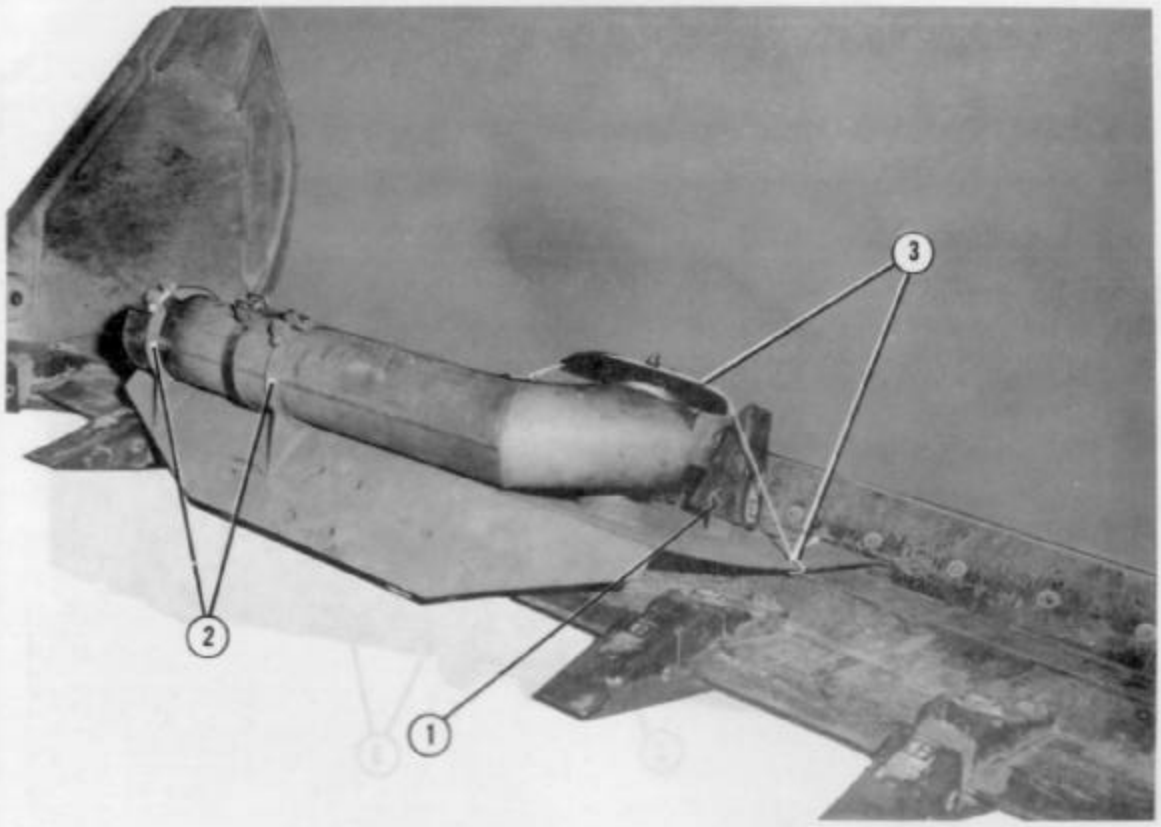

1. Fit the two teeth tips on the CST studs, and insert the locking pins.
2. Bolt the exhaust stack to the mounting brackets on the CST.
3. Slide the air precleaner on the mounting bracket. Tie the precleaner to the CST with type III nylon cord.

Figure 4-20. Air precleaner, and exhaust stack secured to CST

d. Preparing Operator Compartment. Prepare the operator compartment as shown in Figure 4-21.

Note: When securing the operator seat in the operator compartment, the final rigged load must not exceed the maximum allowable height according to FM 10-500-2/TO 13C7-1-5.

---

(1) Place the cushioning material in the operator seat.

(2) Fold the operator seat down, and tie it with 1/2-inch tubular nylon webbing.

Figure 4-21. Operator compartment prepared

(3) Secure the seat with a tiedown and load binder.

(4) Remove the bolts from the steering column bracket assembly. Stow them in the stowage box on the left side of the operator platform (not shown).

Figure 4-21. Operator compartment prepared (continued)

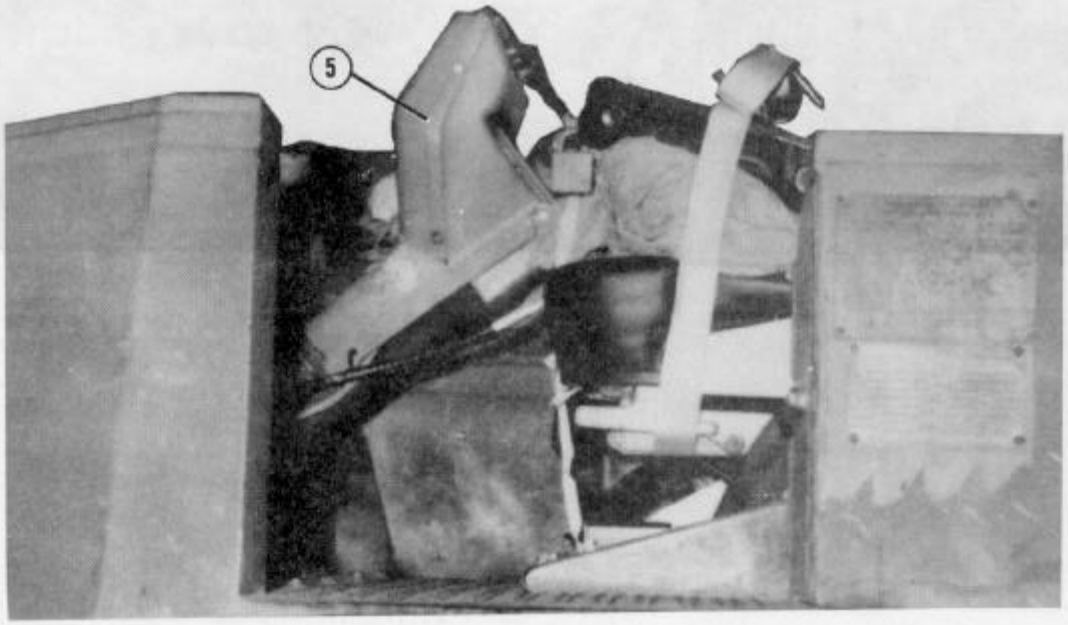

(5) Fold the steering column down.

(6) Secure the steering wheel to the top of the steering column with type III nylon cord (not shown).

Figure 4-21. Operator compartment prepared (continued)

e. Preparing Hydraulic Hoses. Prepare hydraulic hoses as shown in Figure 4-22.

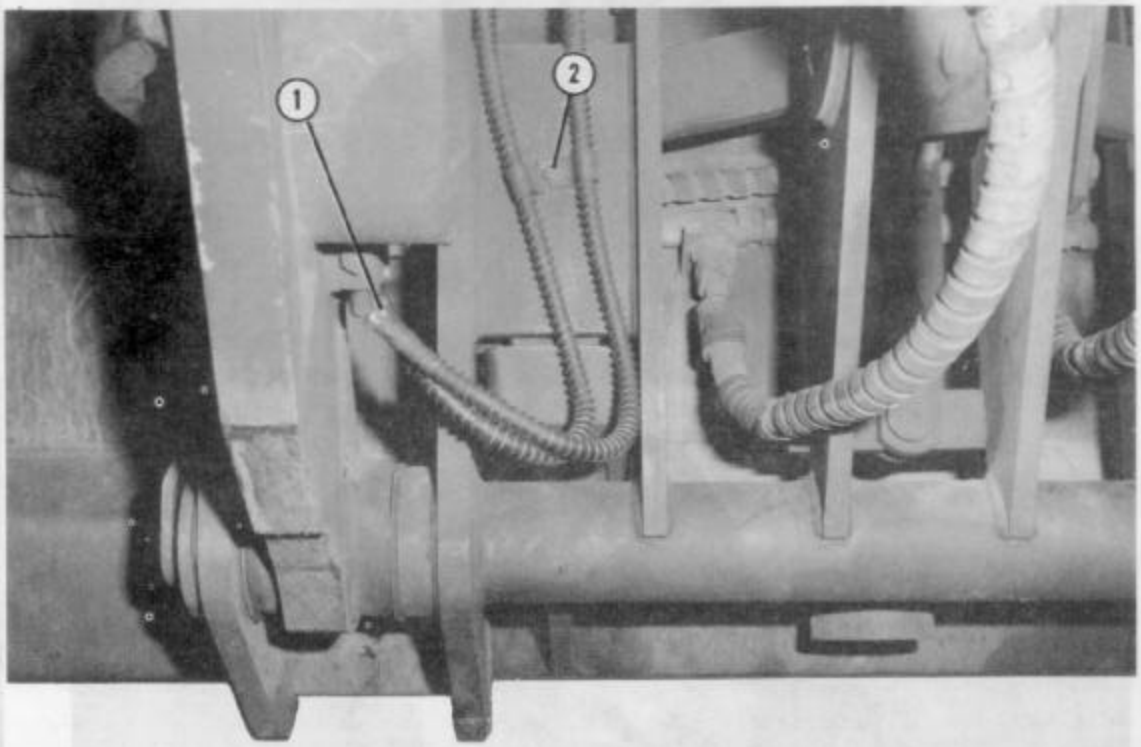

(1) Loosen the bolt securing the hose bracket (left side, behind bucket).
(2) Raise the hoses above the bottom of the bucket, and tighten the bracket bolt.

Figure 4-22. Hydraulic hoses prepared

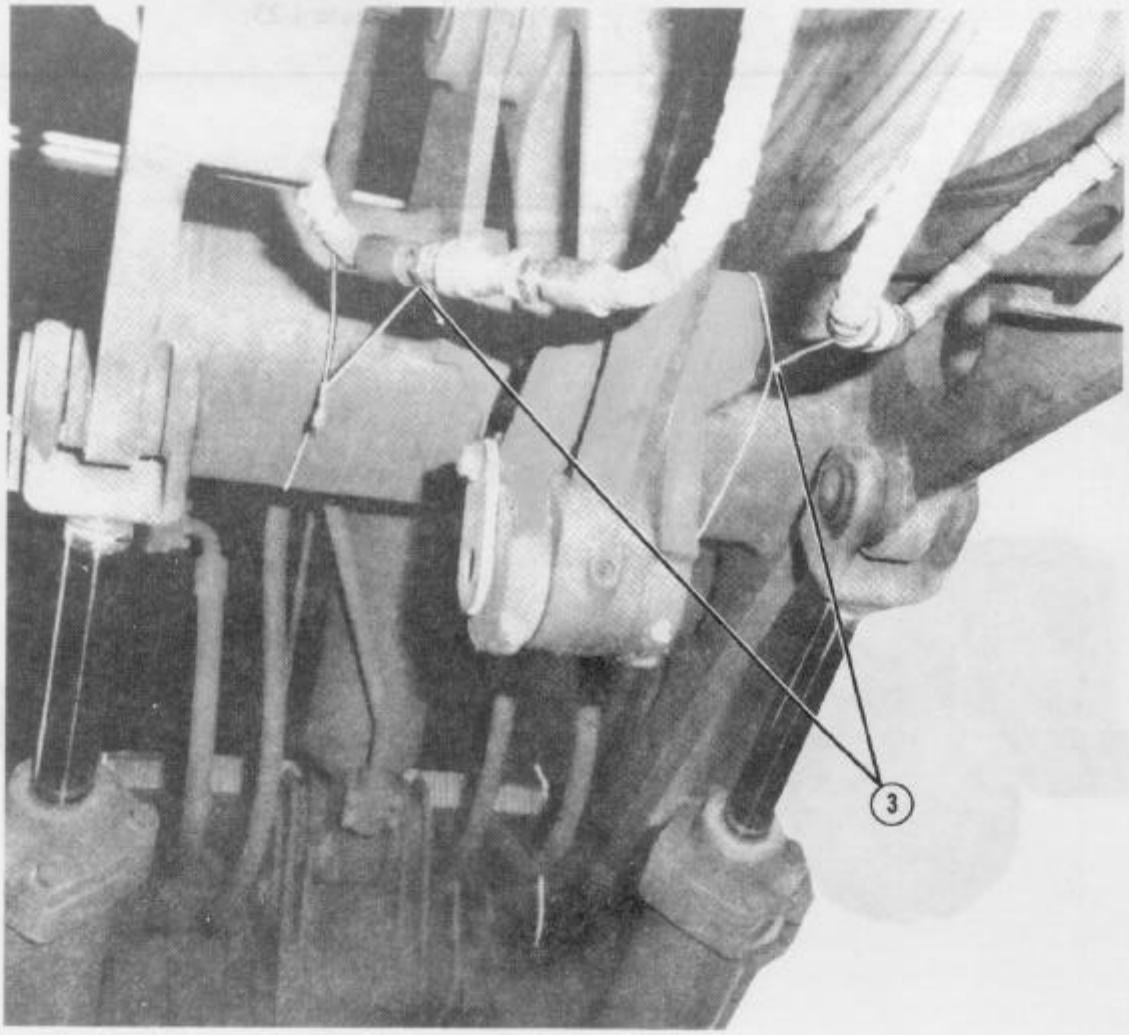

(3) Raise the main hydraulic hoses to the cross member, and tie them with type III nylon cord.

Figure 4-22. Hydraulic hoses prepared (continued)

4-5. Installing Suspension Slings and Positioning Bucket

Use two 11-foot (4-loop), type XXVI nylon webbing slings and two 12-foot (4-loop), type XXVI nylon webbing slings for suspension slings. Bolt the slings to the scoop-loader as shown in Figure 4-23.

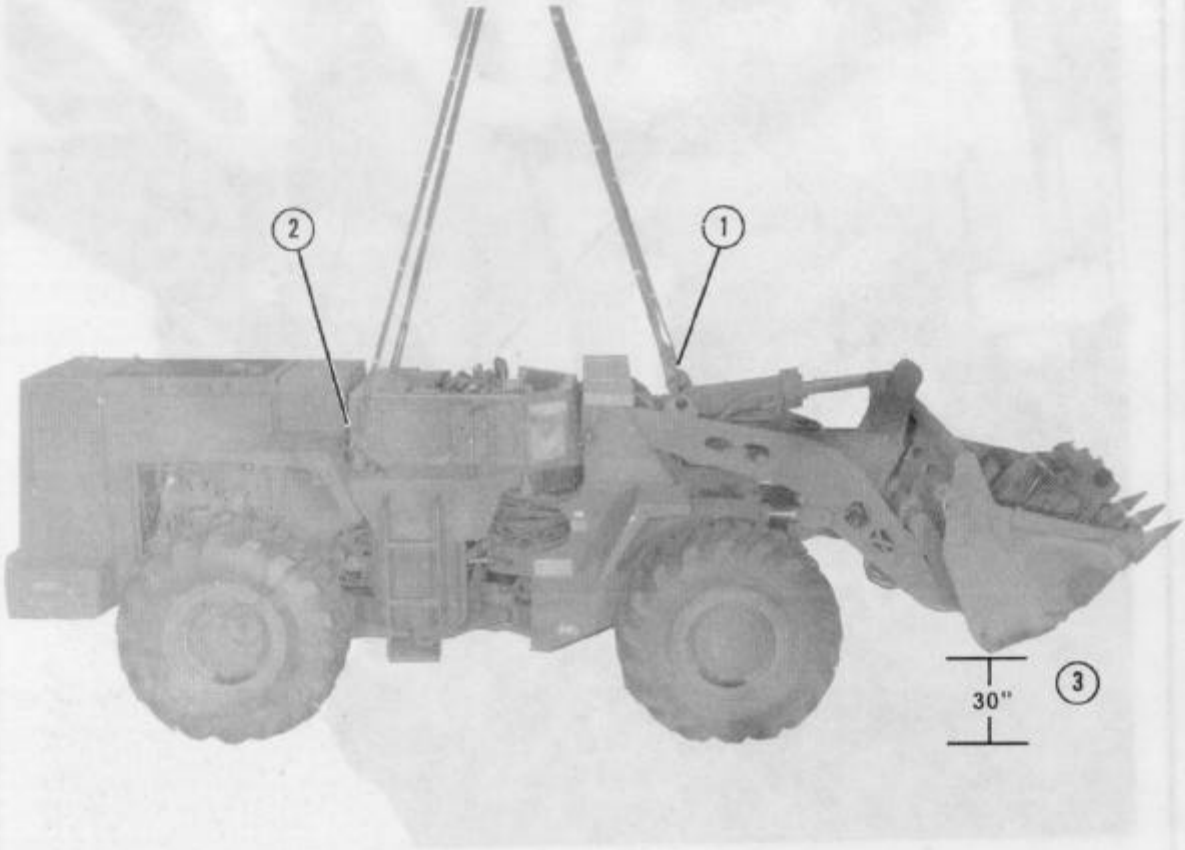

1. Bolt the 11-foot (4-loop), type XXVI nylon webbing slings to the front lifting points with two screw-pin clevises.
2. Bolt the 12-foot (4-loop), type XXVI nylon webbing slings to the rear lifting points with two screw-pin clevises.
3. Raise the bucket 30 inches above the ground, and tilt it to the rear as far as it will tilt.

Figure 4-23. Suspension slings installed and bucket positioned

4-6. Positioning Scoop-Loader

Place the scoop-loader on the platform as shown in Figure 4-24.

Note: If the rear wheels fold in, a 15-foot tiedown lashing must be used to keep the wheels straight.

CAUTION
The bucket must be centered between the platform side rails with a 27-inch overhang to the front.

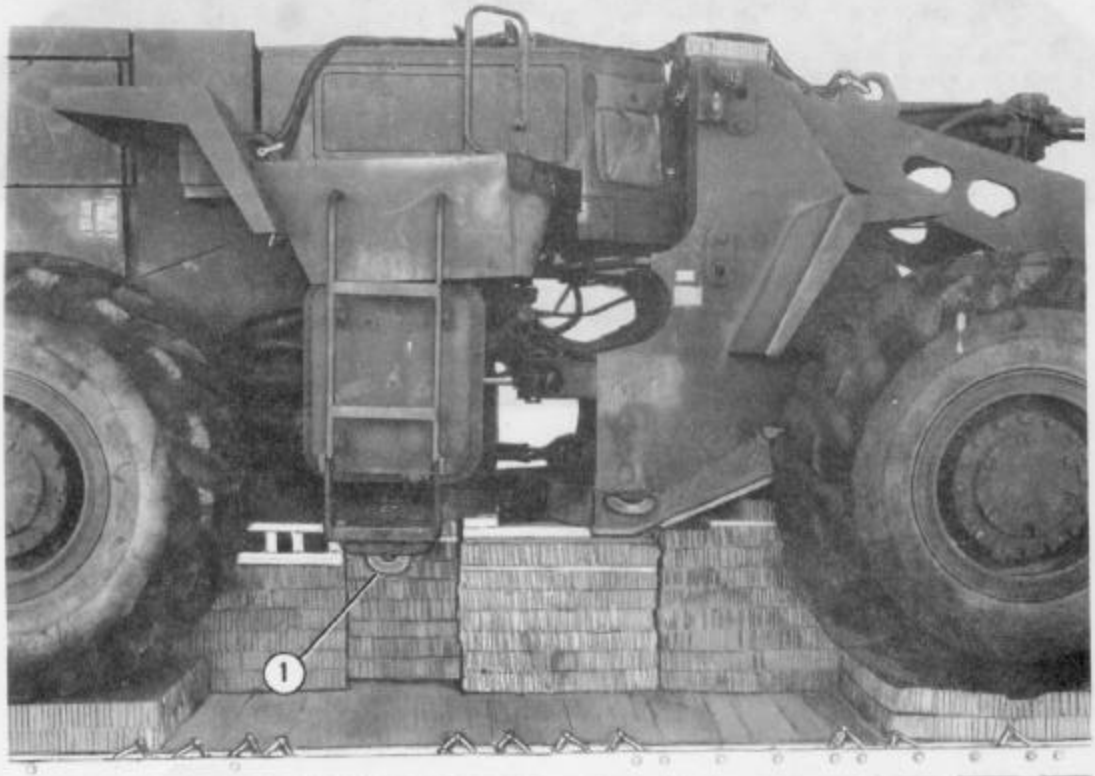

(1) Center the fifth tiedown provision on stack 6.

Figure 4-24. Scoop-loader positioned

CAUTION
The bucket must be centered between the platform side rails with a 27-inch overhang to the front.

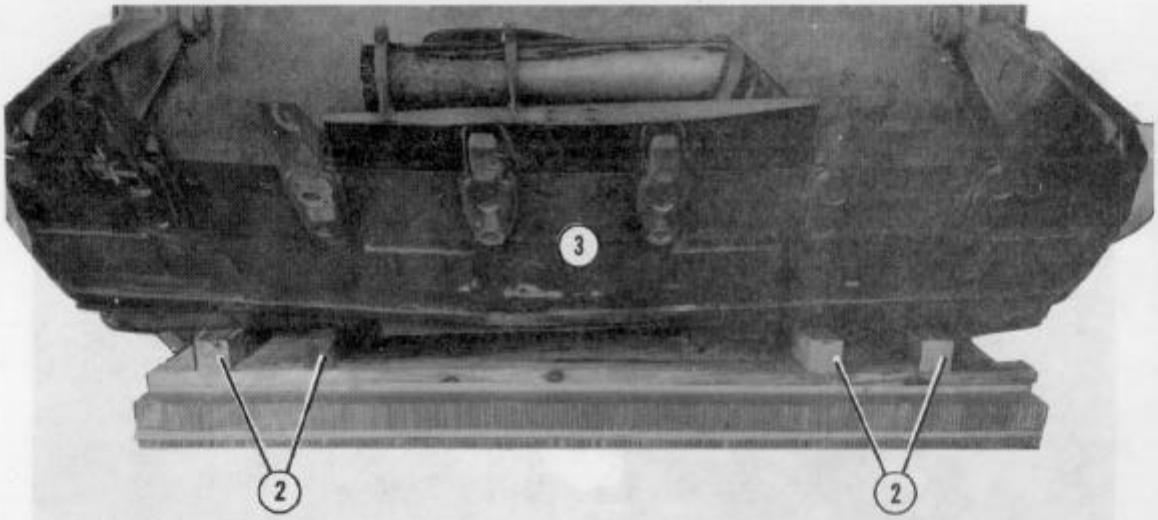

(2) Position and adjust four pieces of 4- by 4- by 26-inch lumber on stack 1 as shown above.

(3) Lower the bucket onto stack 1. Make sure the bucket is moved to the full rear position.

Note: Toenail the 4- by 4- by 26-inch pieces of lumber after the bucket is lowered.

Figure 4-24. Scoop-loader positioned (continued)

4-7. Preparing Scoop-Loader After Positioning

After the scoop-loader has been positioned on the platform, prepare it as shown in Figure 4-25. Use four 15-foot tiedown assemblies to secure the bucket and the lift-arm cross member.

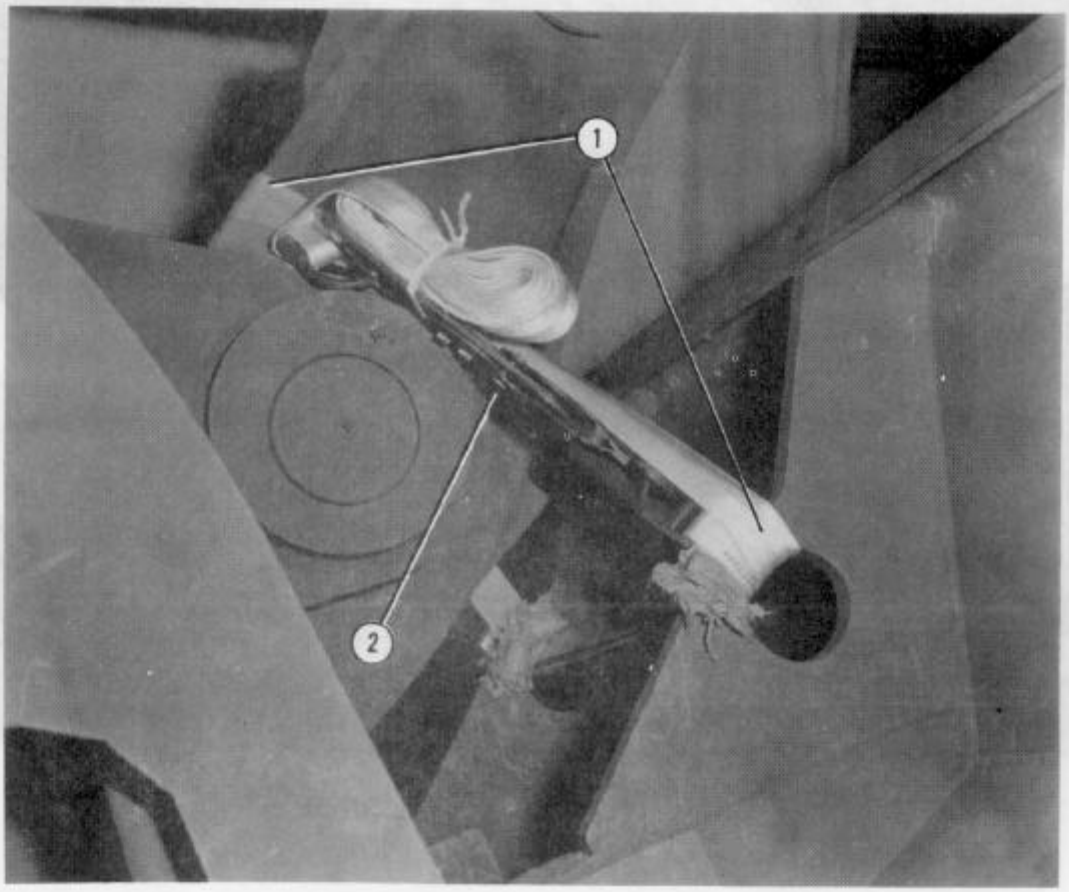

(1) Run a 15-foot tiedown strap through the holes in the brace at the rear of the bucket and around the tilt arm. Secure the ends with a D-ring and load binder.

(2) Run a second 15-foot tiedown strap as shown in step 1 above.

Figure 4-25. Scoop-loader prepared after positioning

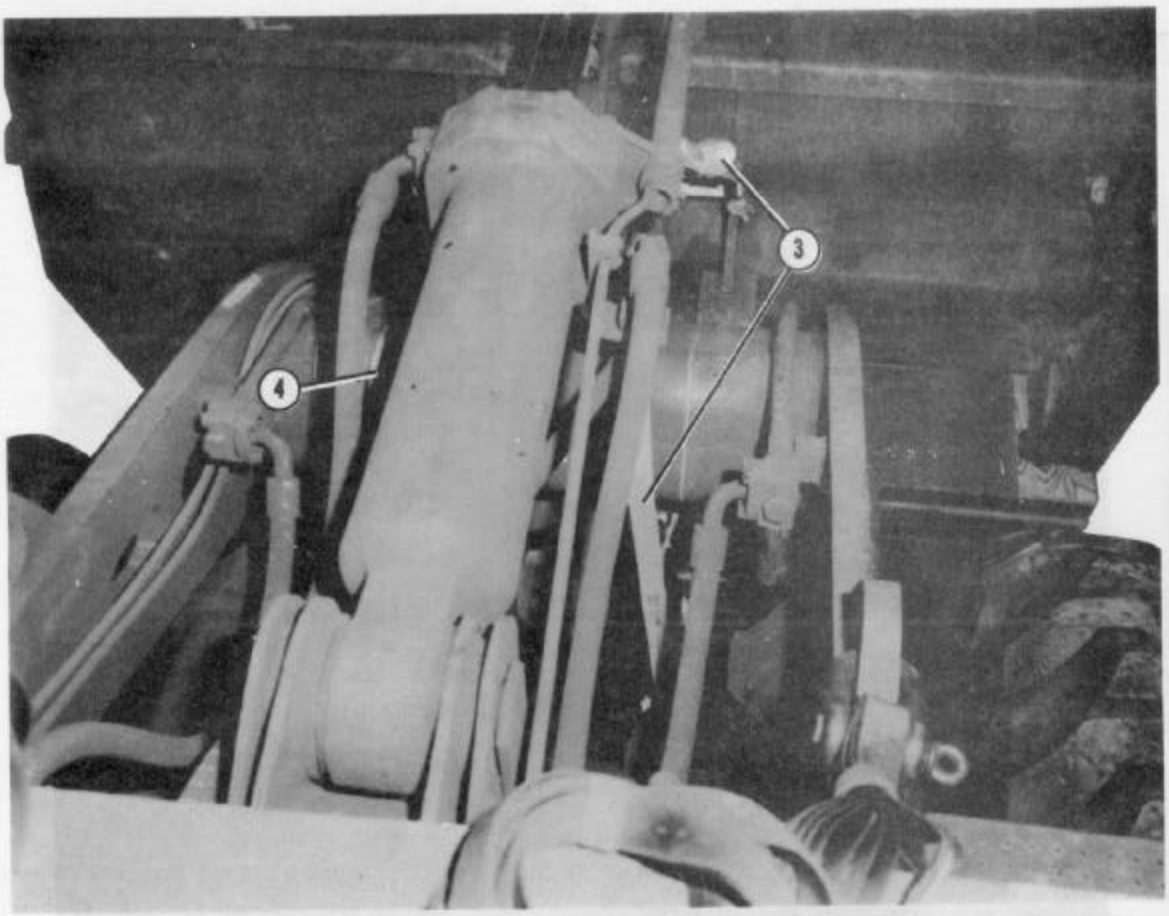

(3) Run a 15-foot tiedown strap through the lower front lifting point and around the lift-arm cross member. Secure the ends with a D-ring and load binder.

(4) Run another 15-foot tiedown strap (as in step 3) on the other side of the vehicle.

Figure 4-25. Scoop-loader prepared after positioning (continued)

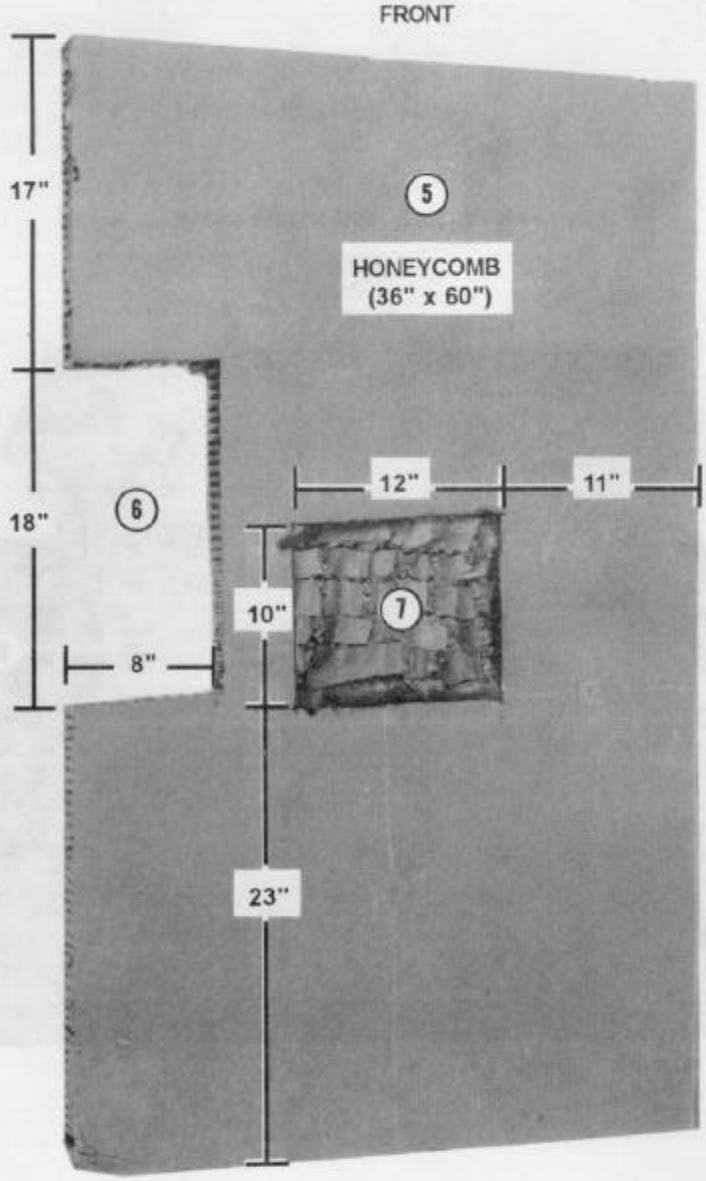

(5) Prepare a 36- by 60-inch piece of honeycomb to cover the operator compartment.

(6) Make an 8- by 18-inch cutout in one side of the honeycomb.

(7) Crush a 10- by 12-inch area in the center of the honeycomb.

Figure 4-25. Scoop-loader prepared after positioning (continued)

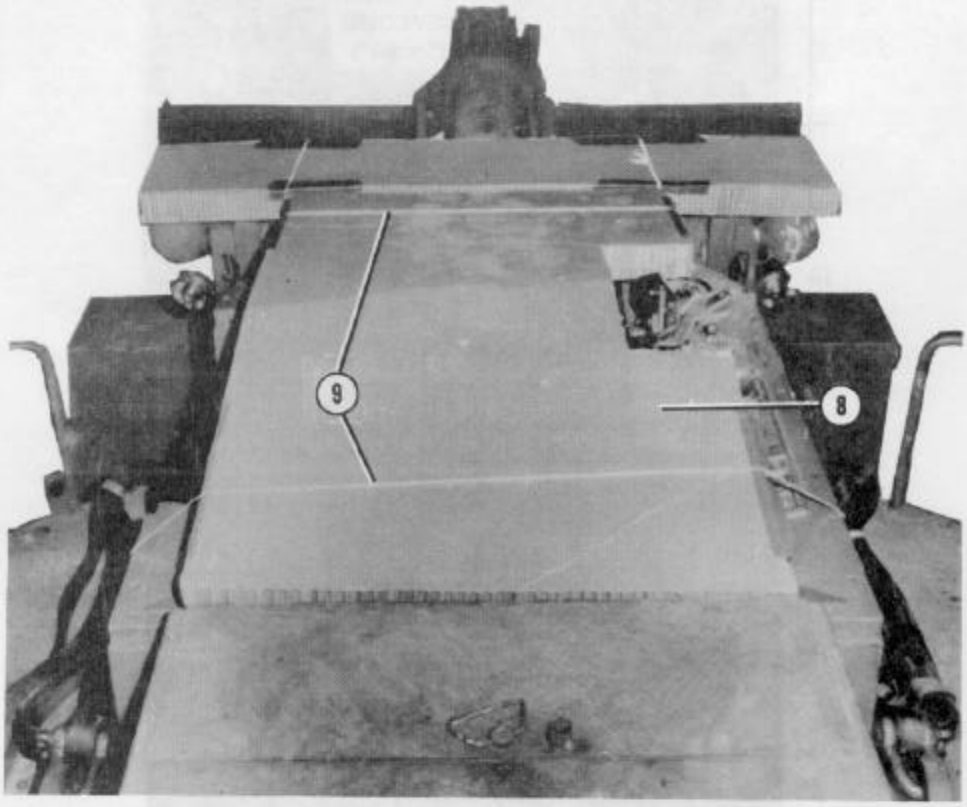

(8) Set the honeycomb on the operator compartment with the crushed area over the steering column and the cutout over the hydraulic control handles.

(9) Tape the edges of the honeycomb. Tie the honeycomb in place with type III nylon cord.

Figure 4-25. Scoop-loader prepared after positioning (continued)

4-8. Lashing Scoop-Loader

Lash the scoop-loader to the platform with thirty-six 15-foot tiedown assemblies as shown in Figures 4-26 through 4-29. Install and safety the tiedown assemblies according to FM 10-500-2/TO 13C7-1-5.

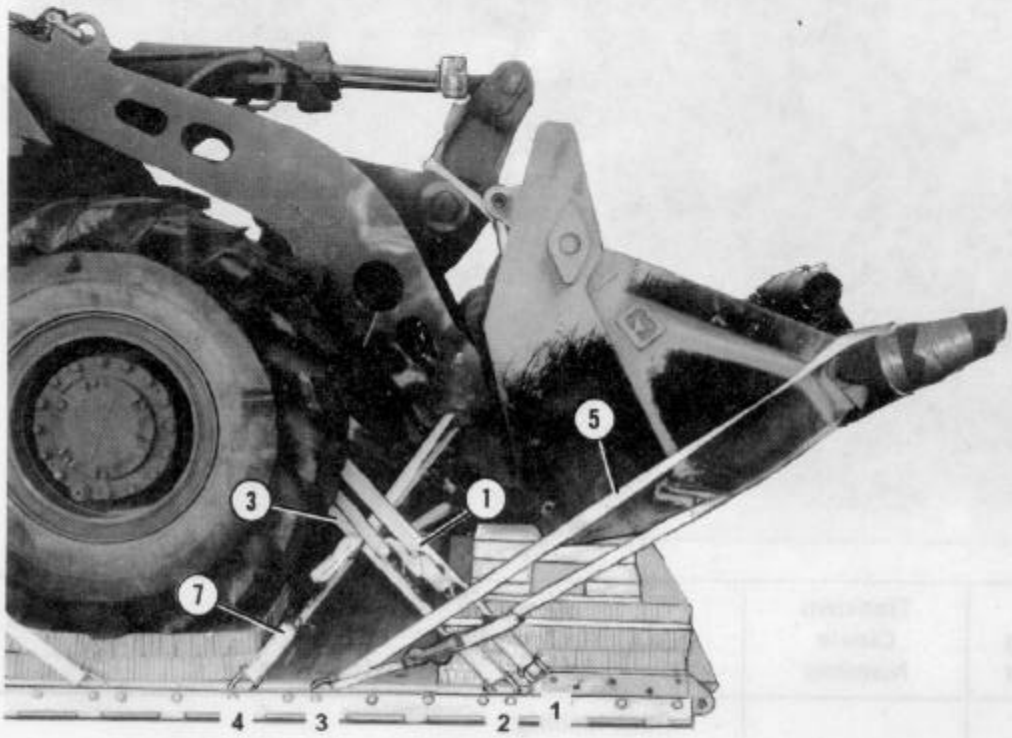

Lashing Number	Tiedown Clevis Number	Instructions
		Pass lashing:
1	1	Through front lift eye, right side of vehicle.
2	1A	Through front lift eye, left side of vehicle.
3	2	Through tiedown provision 2, right side of vehicle.
4	2A	Through tiedown provision 2, left side of vehicle.
5	3	Around the corner of the bucket, right side of vehicle.
6	3A	Around the corner of the bucket, left side of vehicle.
7	4	Through tiedown provision 1, right side of vehicle.
8	4A	Through tiedown provision 1, left side of vehicle.

Figure 4-26. Lashings 1 through 8 installed

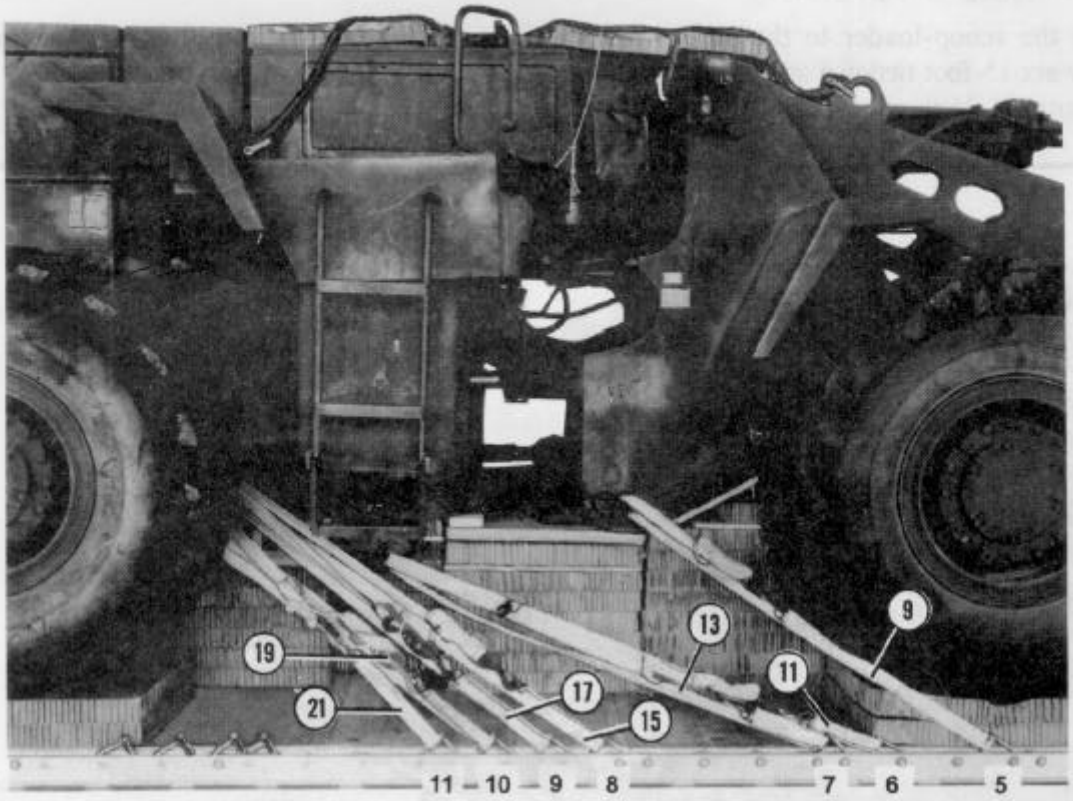

Lashing Number	Tiedown Clevis Number	Instructions
		Pass lashing:
9	5	Through tiedown provision 4, right side of vehicle.
10	5A	Through tiedown provision 4, left side of vehicle.
11	6	Through tiedown provision 5, right side of vehicle.
12	6A	Through tiedown provision 5, left side of vehicle.
13	7	Through tiedown provision 5, right side of vehicle.
14	7A	Through tiedown provision 5, left side of vehicle.
15	8	Through tiedown provision 6, right side of vehicle.
16	8A	Through tiedown provision 6, left side of vehicle.
17	9	Through tiedown provision 6, right side of vehicle.
18	9A	Through tiedown provision 6, left side of vehicle.
19	10	Through tiedown provision 7, right side of vehicle.
20	10A	Through tiedown provision 7, left side of vehicle.
21	11	Through tiedown provision 7, right side of vehicle
22	11A	Through tiedown provision 7, left side of vehicle

Figure 4-27. Lashings 9 through 22 installed

Lashing Number	Tiedown Clevis Number	Instructions
		Pass lashing:
23	12	Through tiedown provision 3, right side of vehicle.
24	12A	Through tiedown provision 3, left side of vehicle.
25	13	Through tiedown provision 3, right side of vehicle.
26	13A	Through tiedown provision 3, left side of vehicle.
27	14	Through tiedown provision 4, right side of vehicle.
28	14A	Through tiedown provision 4, left side of vehicle.
29	15	Through tiedown provision 4, right side of vehicle.
30	15A	Through tiedown provision 4, left side of vehicle.

Figure 4-28. Lashings 23 through 30 installed

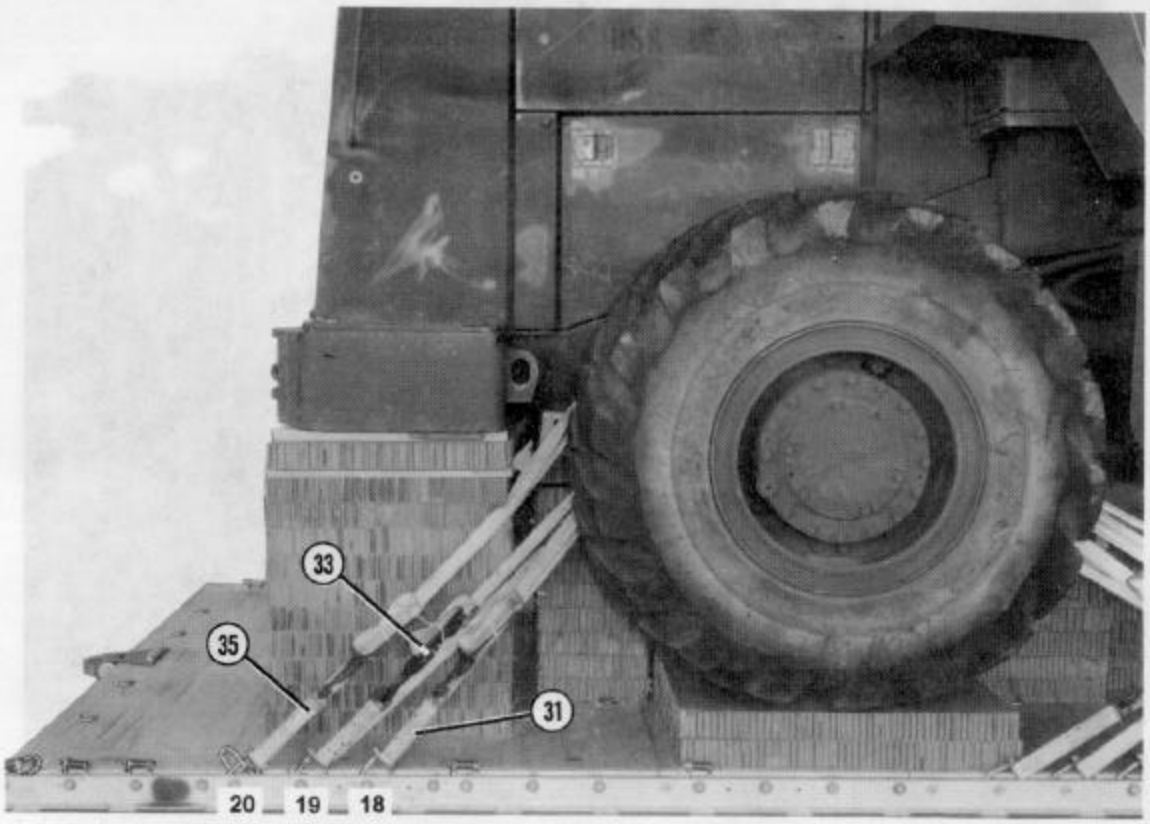

Lashing Number	Tiedown Clevis Number	Instructions
		Pass lashing:
31	18	Through tiedown provision 7, right side of vehicle.
32	18A	Through tiedown provision 7, left side of vehicle.
33	19	Through tiedown provision 7, right side of vehicle.
34	19A	Through tiedown provision 7, left side of vehicle.
35	20	Through rear lift eye (provision), right side of vehicle.
36	20A	Through rear lift eye (provision), left side of vehicle.

Figure 4-29. Lashings 31 through 36 installed

4-9. Safetying Suspension Slings

Safety the suspension slings according to FM 10-500-2/TO 13C7-1-5 and as shown in Figure 4-30.

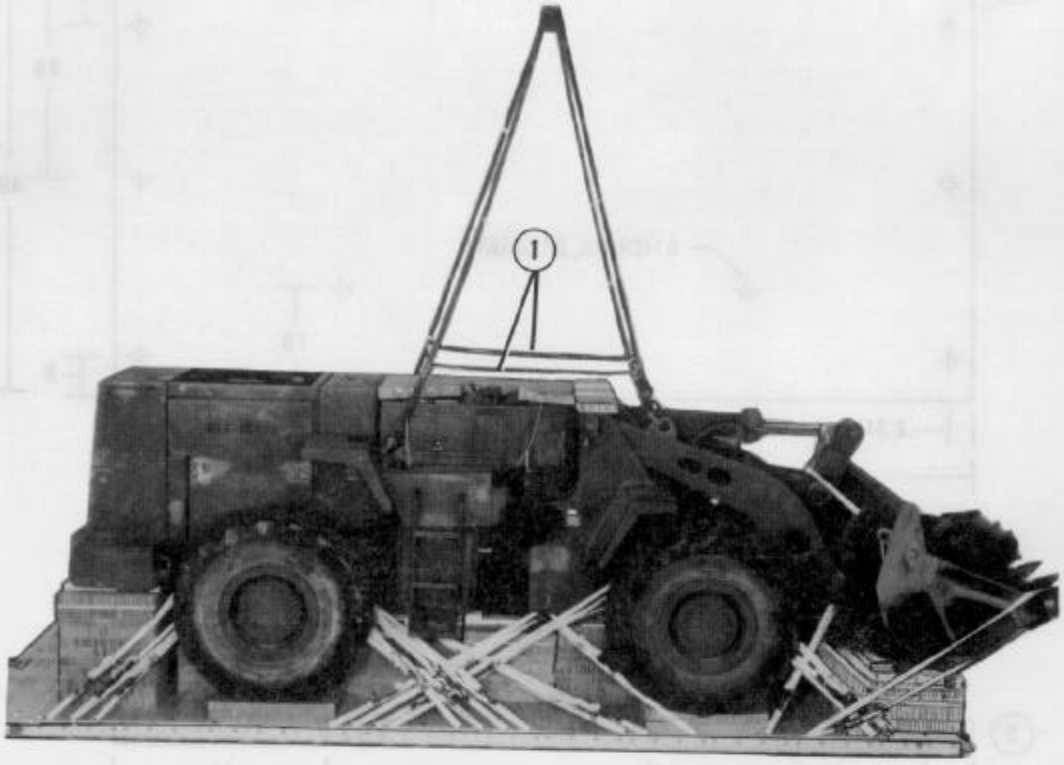

(1) Use 1/2-inch tubular nylon webbing to form a deadman's tie on the suspension slings.

Figure 4-30. Suspension slings safetied

4-10. Building and Installing Parachute Stowage Platform

Build and install the parachute stowage platform as given below.

a. Building Parachute Stowage Platform. Build the platform as shown in Figure 4-31.

Notes: 1. These drawings are not drawn to scale.
2. Circled numbers refer to item numbers.
3. All measurements are given in inches.

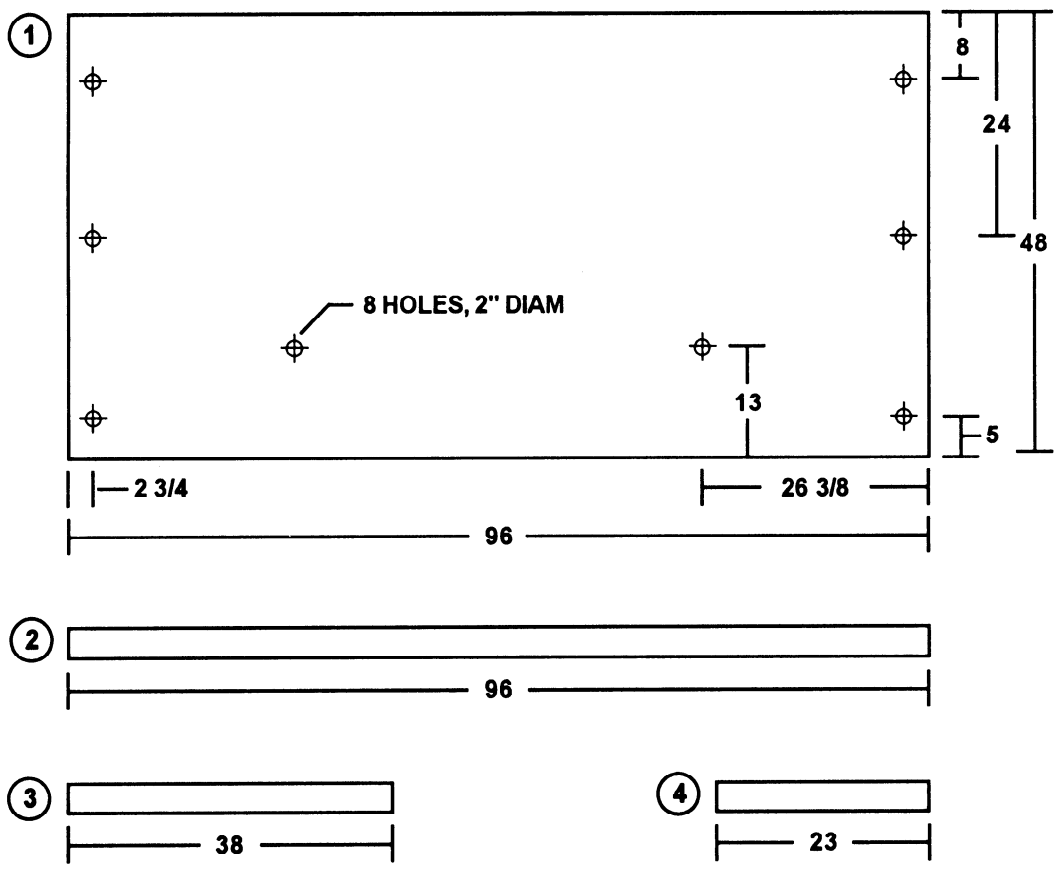

Item Number	Pieces	Width (Inches)	Length (Inches)	Material
1	1	48	96	3/4-inch plywood
2	2	4	96	2- by 4-inch lumber
3	2	4	38	2- by 4-inch lumber
4	4	4	23	2- by 4-inch lumber

Figure 4-31. Parachute stowage platform built

Notes: 1. These drawings are not drawn to scale.
2. Circled numbers refer to item numbers.

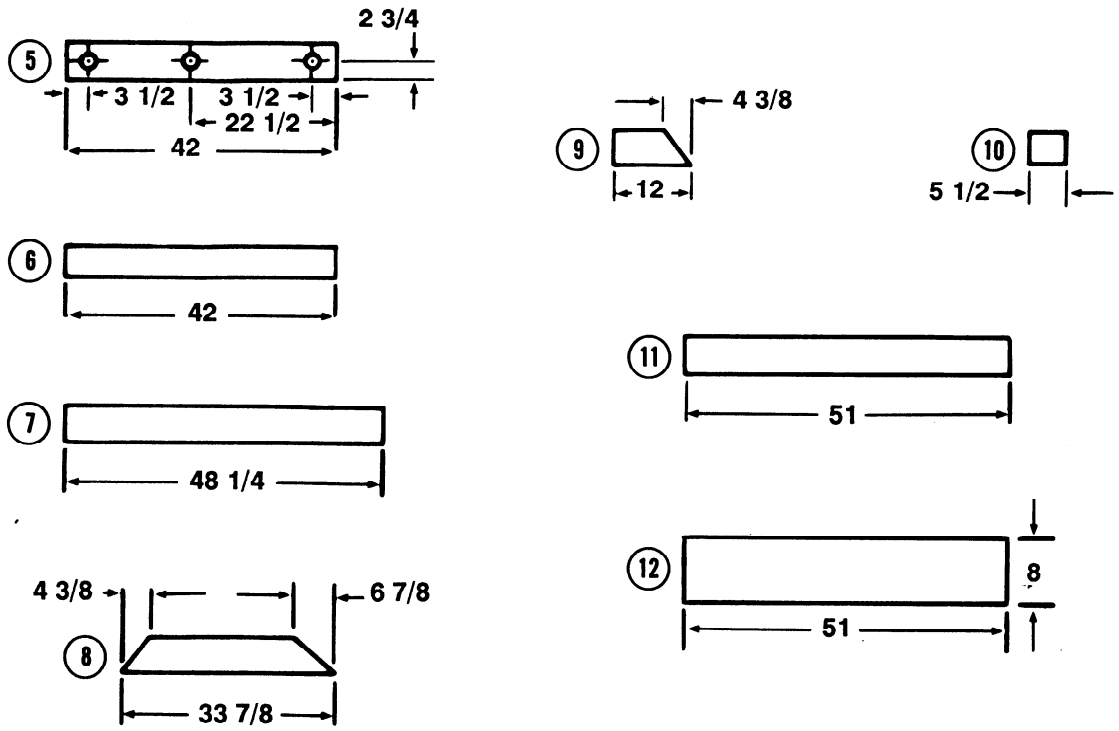

Item Number	Pieces	Width (Inches)	Length (Inches)	Material
5	4	6	42	2- by 6-inch lumber
6	3	4	42	2- by 4-inch lumber
7	4	6	48 1/4	2- by 6-inch lumber
8	2	6	33 7/8	2- by 6-inch lumber
9	4	6	12	2- by 6-inch lumber
10	2	4	5 1/2	2- by 4-inch lumber
11	1	6	51	2- by 6-inch lumber
12	1	8	51	3/4-inch plywood

Step:

1. Use eightpenny nails in the plywood. Use tenpenny and sixteen-penny nails in the lumber.
2. Drill holes in the stowage platform after it has been assembled.

Figure 4-31. Parachute stowage platform built (continued)

CAUTION
This stowage platform supports 2,240 pounds of parachutes. Use a generous amount of nails.

Notes: 1. These drawings are not drawn to scale.
2. Platform legs may require adjustment.

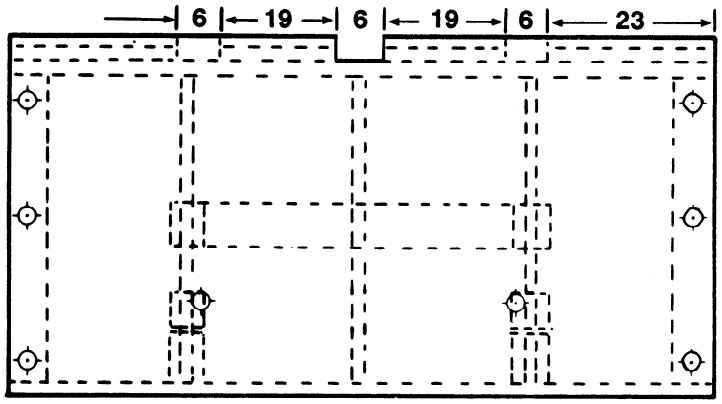

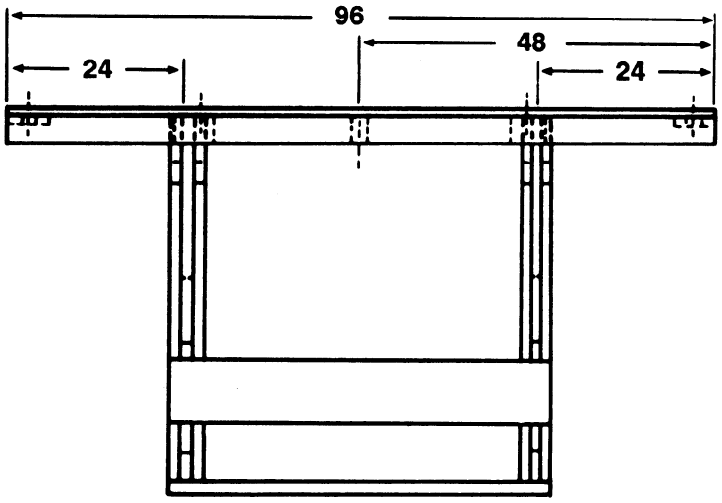

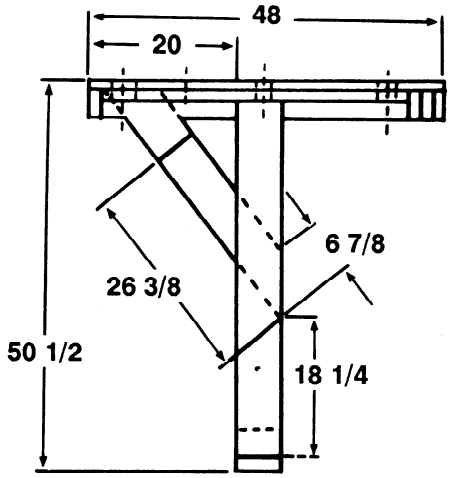

Figure 4-31. Parachute stowage platform built (continued)

Note: These drawings are not drawn to scale.

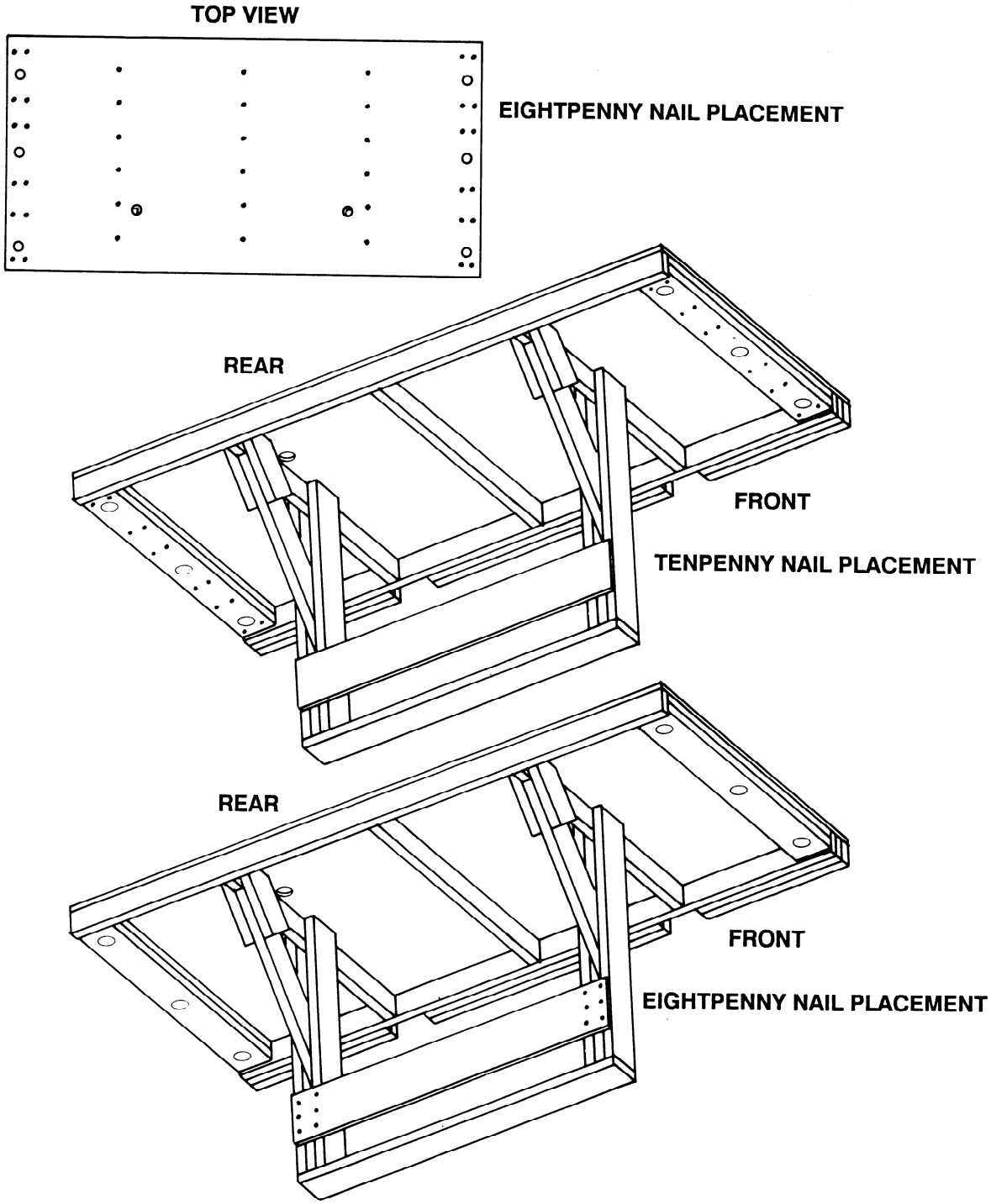

Figure 4-31. Parachute stowage platform built (continued)

Note: These drawings are not drawn to scale.

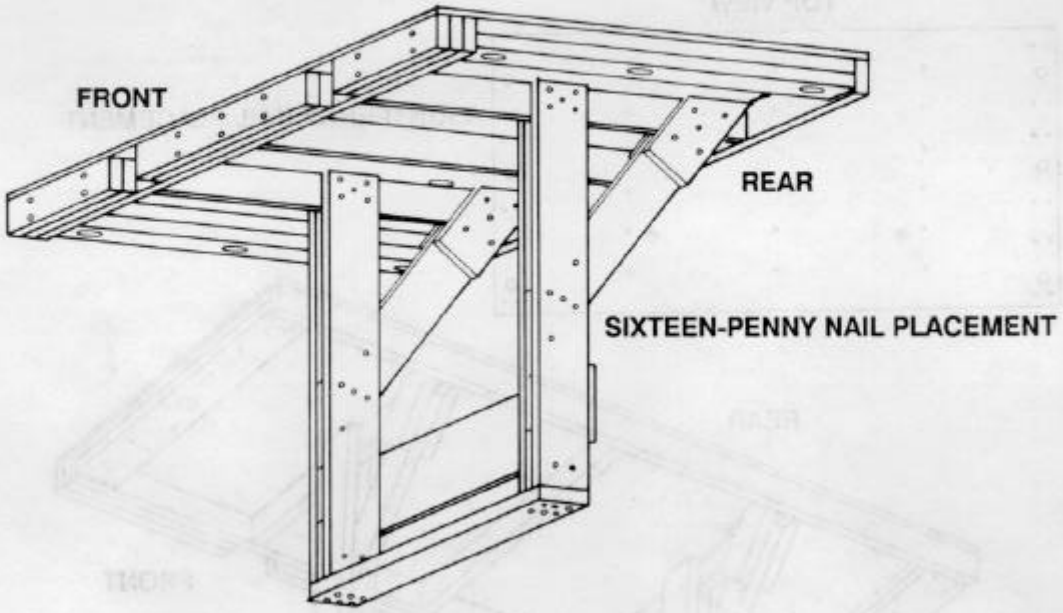

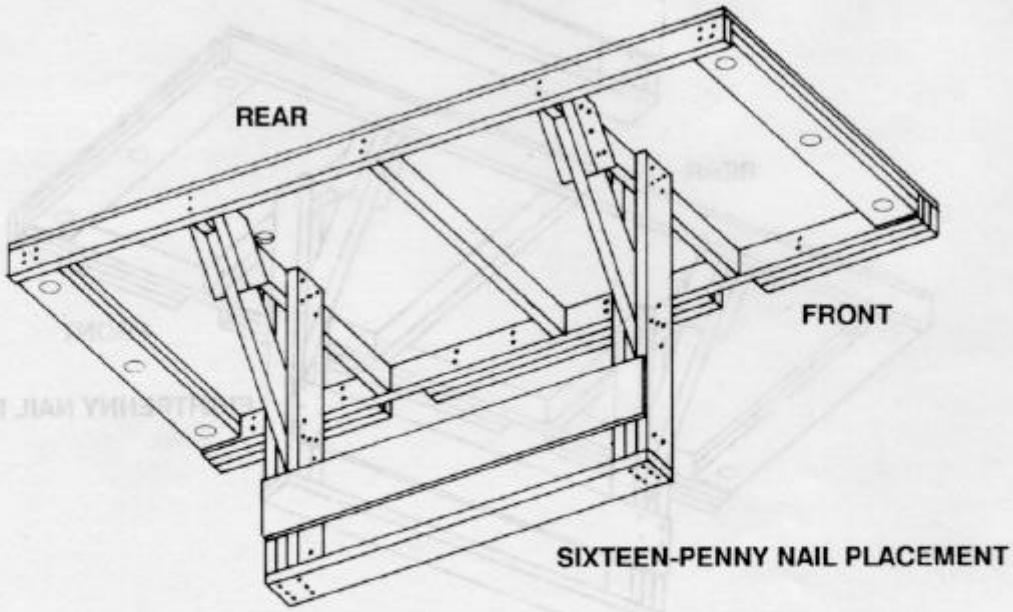

Figure 4-31. Parachute stowage platform built (continued)

CAUTION
This stowage platform supports 2,240 pounds of parachutes. Use a generous amount of nails.

Notes: 1. This drawing is not drawn to scale.
2. Platform legs may require adjustment.
3. Circled numbers refer to item numbers.

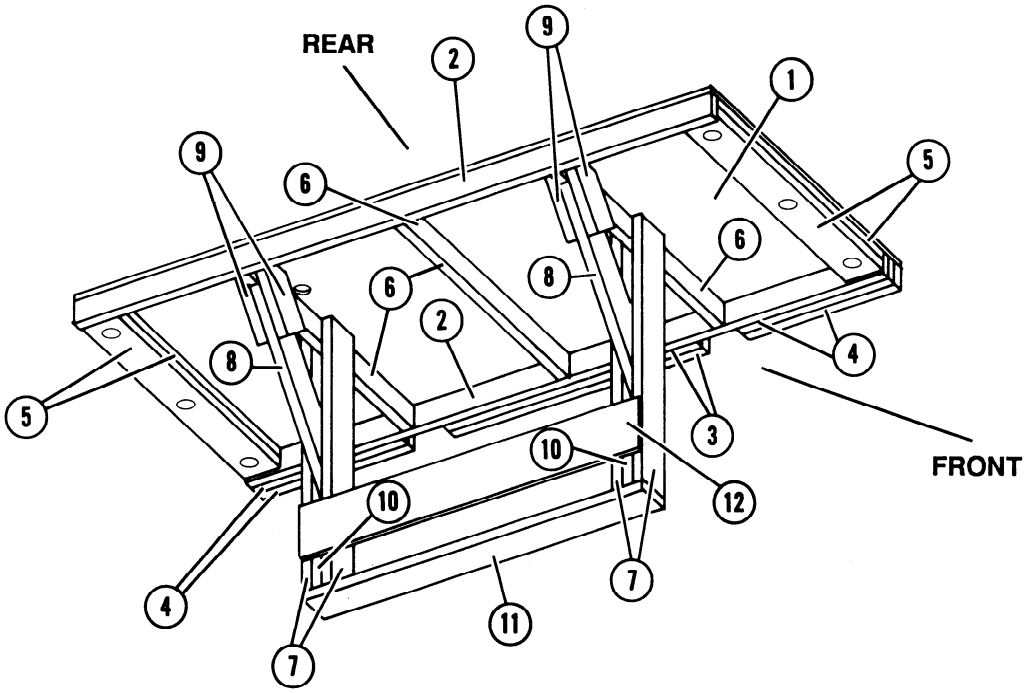

Figure 4-31. Parachute stowage platform built (continued)

b. Installing Parachute Stowage Platform. Install the platform on the load as shown in Figure 4-32.

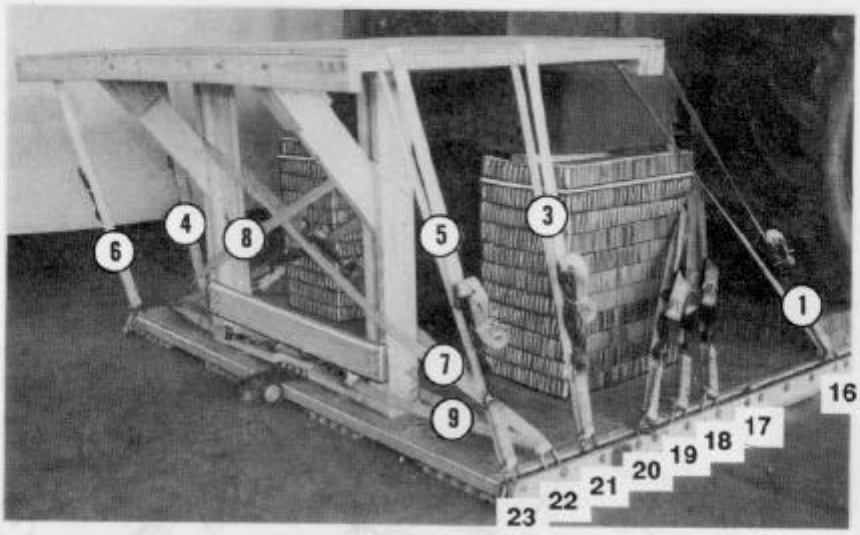

Lashing Number	Tiedown Clevis Number	Instructions
		Pass strap:
1	16	Through the front hole in the stowage tray. Secure the end with a D-ring and load binder.
2	16A	Through the front hole in the stowage tray. Secure the end with a D-ring and load binder.
3	21	Through the center hole in the stowage tray.
4	21A	Through the center hole in the stowage tray.
5	23	Through the rear hole in the stowage tray.
6	23A	Through the rear hole in the stowage tray.
7	22	Through clevis 22 and around the left upright brace. Bind the end with a D-ring and load binder.
8	22A	Through clevis 22A and around the right upright brace. Bind the end with a D-ring and load binder.
*9	22	Between the upright braces. Run one end through clevis 22 and the other end through 22A and back around the opposite side of the brace. Secure the ends with D-rings and a load binder.

*30-foot lashing.

Figure 4-32. Parachute stowage platform installed

4-11. Stowing Cargo Parachutes

Prepare, cluster, and stow eight G-11 cargo parachutes as outlined in FM 10-500-2/TO 13C7-1-5. Secure the parachutes according to FM 10-500-2/TO 13C7-1-5 and as shown in Figure 4-33.

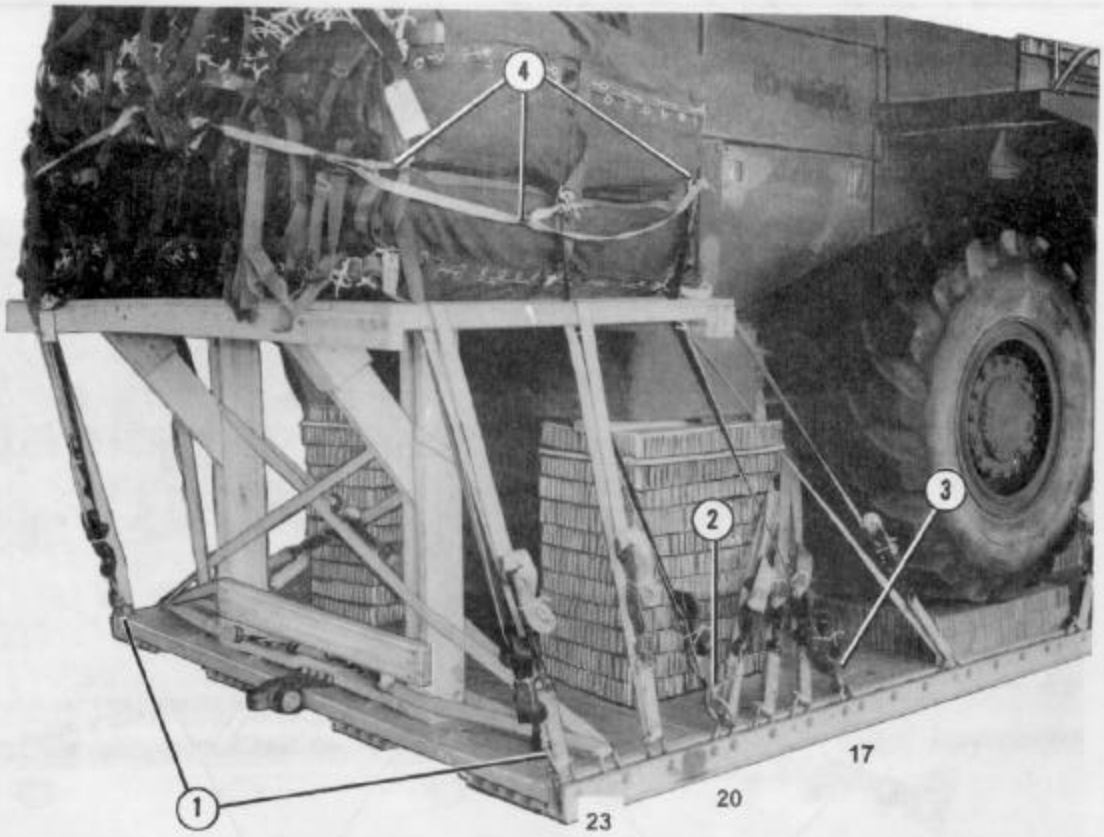

(1) Run one length of type X nylon webbing from clevis *23, through the rear carrying handles, and over to clevis *23A.

(2) Run one length of type X nylon webbing from clevis *20, through the center carrying handles, and over the top to clevis *20A.

(3) Run one length of type X nylon webbing from clevis 17, through the front carrying handles, and over the top to clevis 17A.

Note: Safety the load binders to the stowage platform with lengths of type III nylon cord according to FM 10-500-2/TO 13C7-1-5.

(4) Attach parachute release knives as outlined in FM 10-500-2/TO 13C7-1-5.

** Denotes a double clevis. Install a double clevis according to FM 10-500-2/TO 13C7-1-5.*

Figure 4-33. Cargo parachutes stowed and secured

4-12. Installing Extraction System

Use the EFTC extraction system on this load. Install the components of the EFTC according to FM 10-500-2/TO 13C7-1-5 and as shown in Figure 4-34.

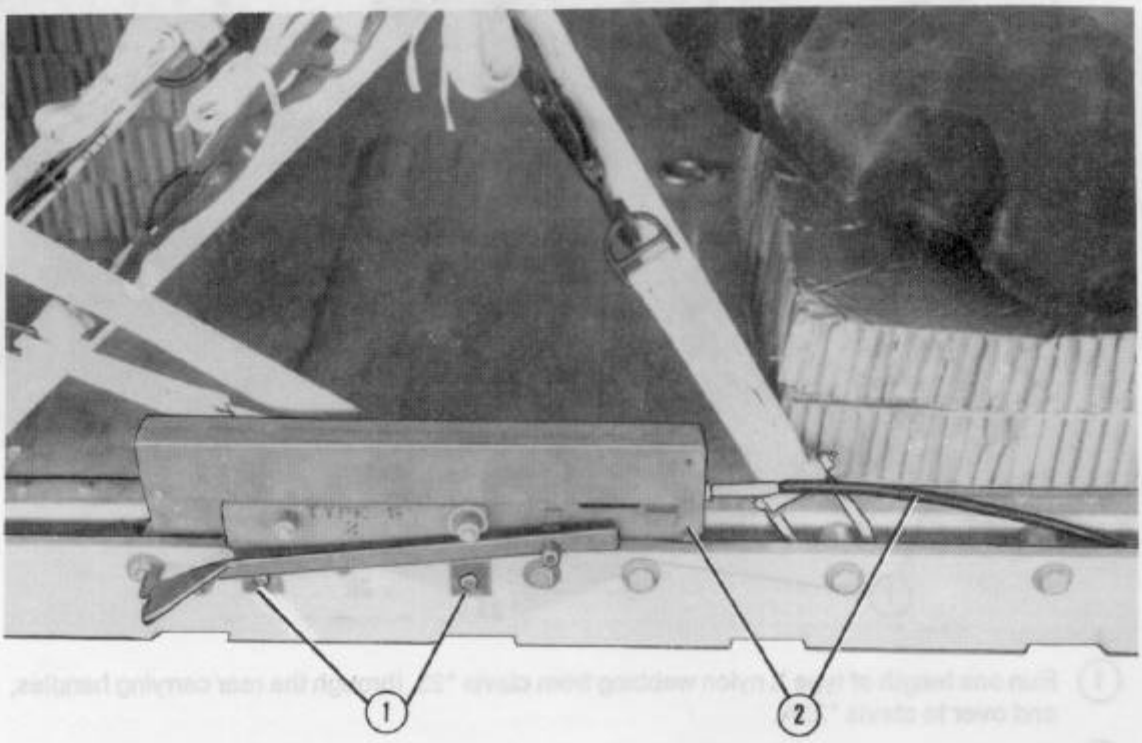

(1) Bolt the actuator bracket to the front EFTC mounting holes.

(2) Attach a 24-foot release cable to the actuator assembly. Install the actuator assembly to the actuator bracket.

Figure 4-34. Extraction system installed

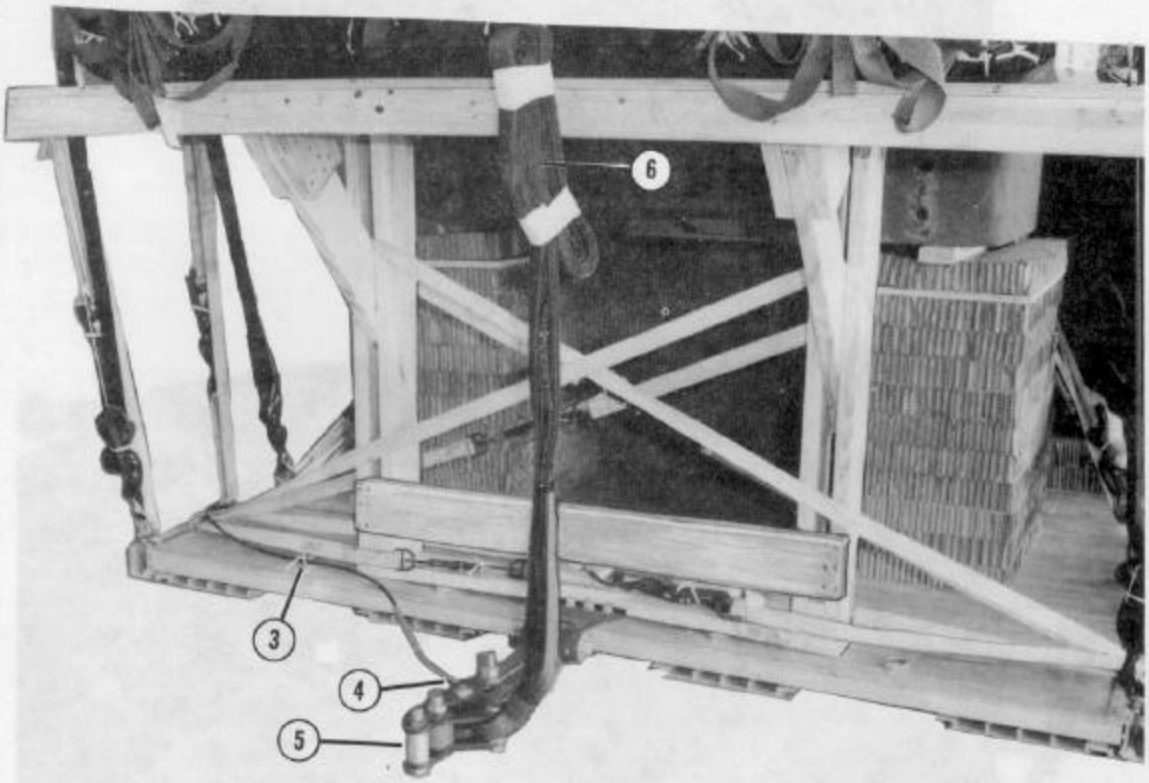

(3) Safety the cable to tiedown D-12 with type I, 1/4-inch cotton webbing.

(4) Bolt the latch assembly to the extraction bracket assembly.

(5) Install an adapter link assembly to the link assembly according to FM 10-500-2/TO 13C7-1-5.

(6) Use a 9-foot (2-loop), type XXVI nylon webbing sling for deployment line. S-fold and tie the excess line with type I, 1/4-inch cotton webbing.

Figure 4-34. Extraction system installed (continued)

4-13. Installing M-2 Release Assembly

Install the M-2 parachute release assembly (modified for 42,000-pound capacity) as shown in FM 10-500-2/TO 13C7-1-5 with the exceptions outlined in Figure 4-35.

CAUTION
Be sure the modified M-2 parachute release includes these strengthened items: one reinforced toggle shaft, four hardened sleeve bolts, four 2 3/8-inch steel spacers, and two hardened clevis bolts with sleeves.

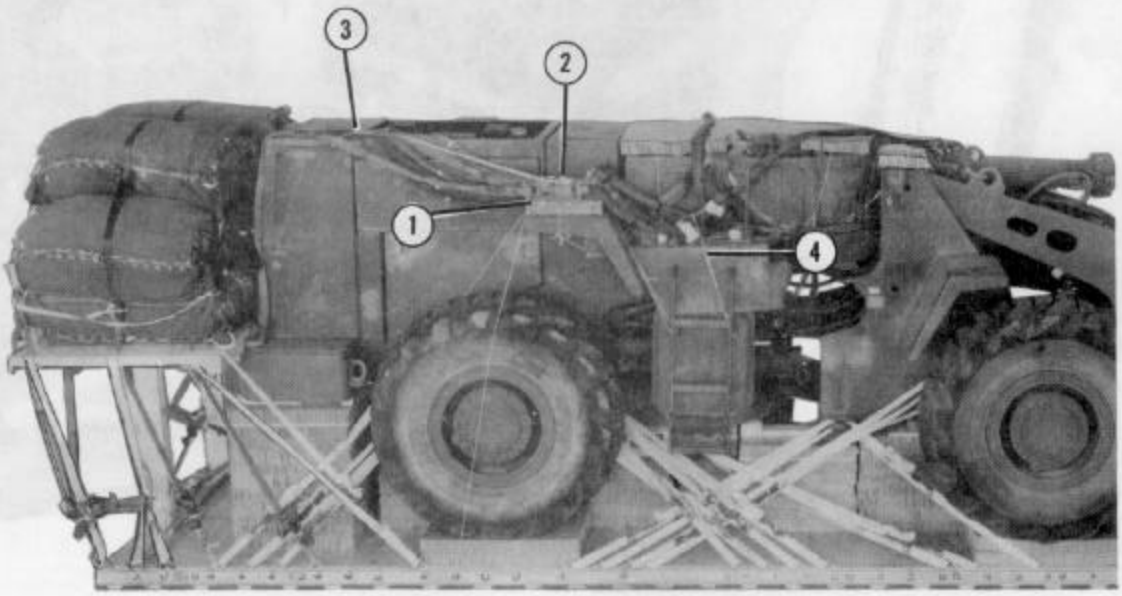

1. Tie a piece of honeycomb on the right rear fender.
2. Place the modified M-2 release assembly on the honeycomb.
3. Safety the riser extensions between the rear handle with type I, 1/4-inch cotton webbing.

Note: Some riser extension stows may have to be cut to allow the riser extensions to reach the release.

4. Route the suspension slings to the right side of the scoop-loader. Tie the slings down with type I, 1/4-inch cotton webbing.

Figure 4-35. Modified M-2 parachute release assembly installed

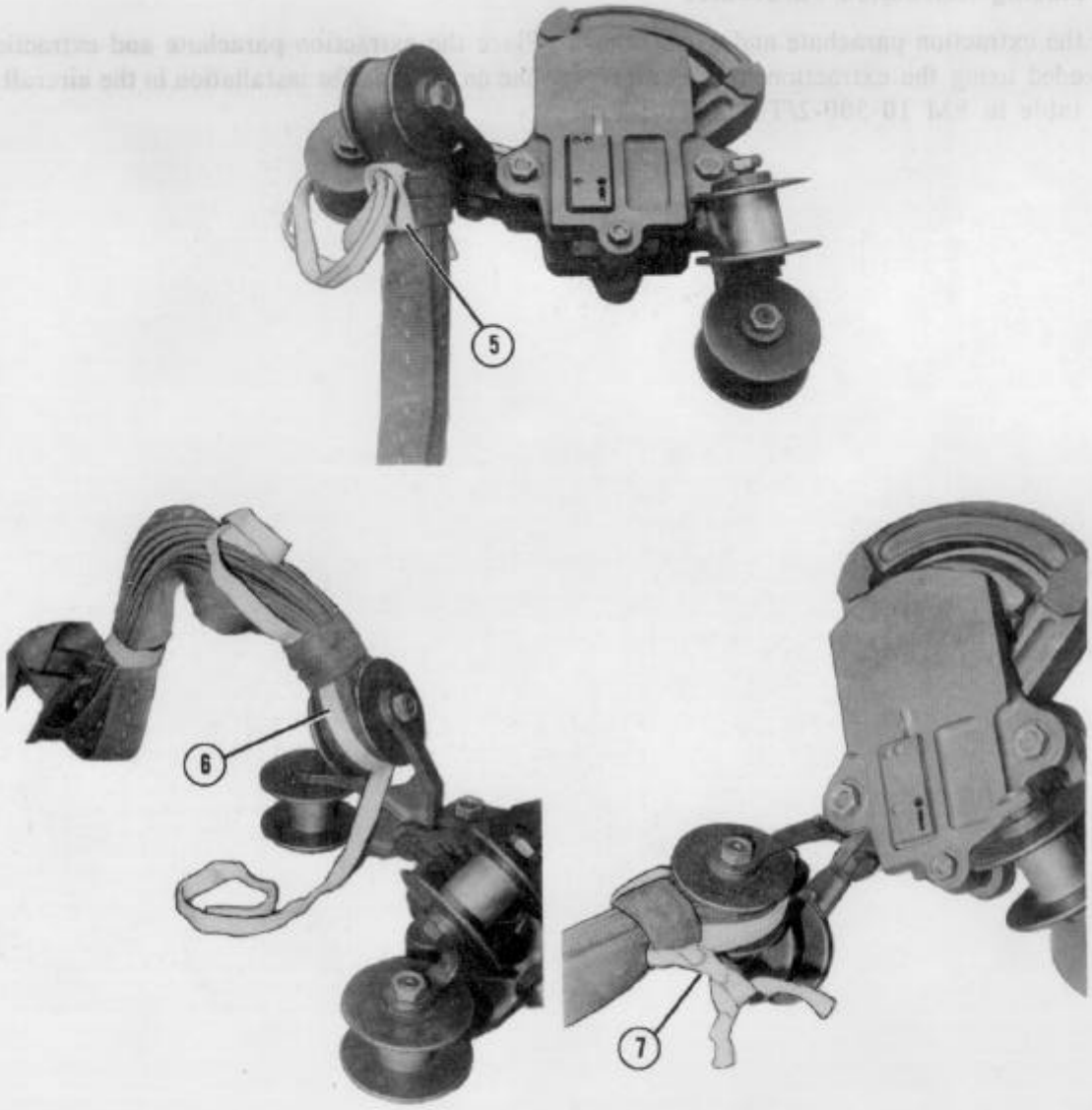

(5) Form girth hitch around one side of a sling keeper with a 60-inch length of 1/2-inch tubular nylon webbing so that the running ends are of equal length.

(6) Bring both running ends around the loop of the sling and through the suspension link. Bring one running end through the sling keeper.

(7) Tie the two running ends together with two half hitches and locking knot. Pull the sling keeper as tightly as possible toward the sling loop.

(8) Secure the other three suspension sling keepers in the same manner (not shown).

Figure 4-35. Modified M-2 parachute release assembly installed (continued)

4-14. Placing Extraction Parachutes

Select the extraction parachute and extraction line needed using the extraction line requirements table in FM 10-500-2/TO 13C7-1-5.

Place the extraction parachute and extraction line on the load for installation in the aircraft.

4-15. Installing Provisions for Emergency Restraints

Install the provisions for the emergency aft restraints as shown in Figure 4-36 and according to the emergency aft restraint requirements table in FM 10-500-2/TO 13C7-1-5.

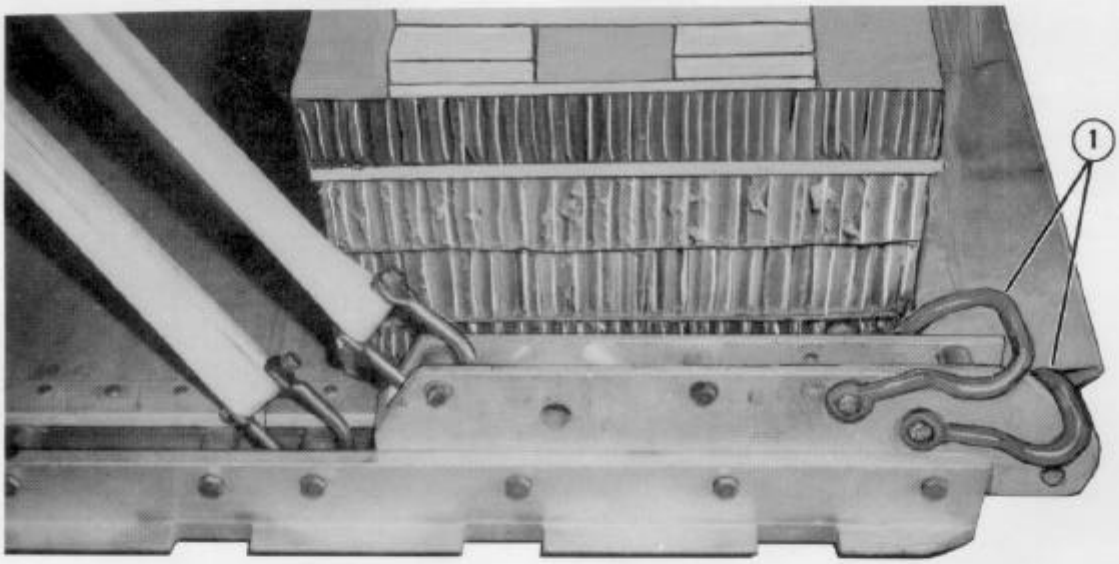

(1) Install two medium clevises in the emergency restraint holes of each tandem link.

Figure 4-36. Provisions for emergency restraints installed

4-16. Marking Rigged Load

Mark the rigged load according to FM 10-500-2/TO 13C7-1-5 and as shown in Figure 4-37. Complete Shipper's Declaration for Dangerous Goods form. If the load varies from the one shown, the weight, height, CB, tip off curve, and parachute requirements must be recomputed.

CAUTION
Make the final rigger inspection required by FM 10-500-2/ TO 13C7-1-5 before the load leaves the rigging site.

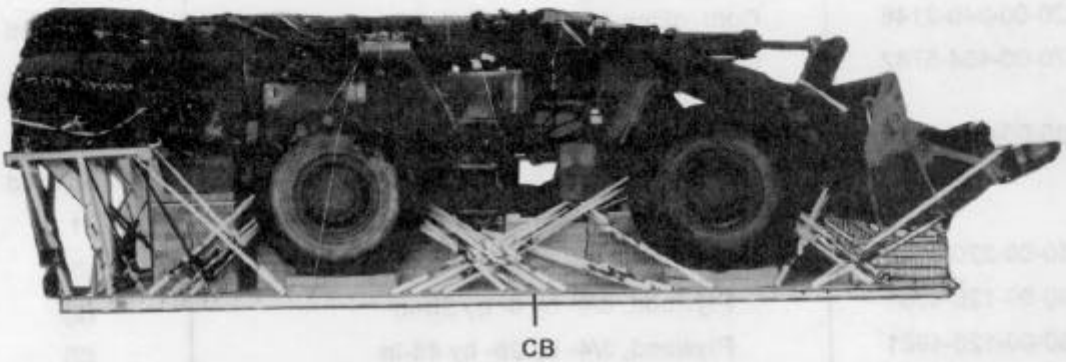

RIGGED LOAD DATA

Weight:	Load shown	37,200 pounds
	Maximum load allowed	38,200 pounds
Height		100 inches
Width		108 inches
Length		349 inches
Overhang:	Front	27 inches
	Rear	21 inches
CB (from front edge of platform)		135 inches
Extraction system (adds 18 inches to length of platform)		EFTC

Figure 4-37. Type 950B scoop-loader rigged for low-velocity airdrop

4-17. Equipment Required

Use the equipment listed in Table 4-1 to rig this load.

Table 4-1. Equipment required for rigging the 950B scoop-loader for a low-velocity airdrop

National Stock Number	Item	Quantity
1670-00-162-4979	Adapter, link assembly	1
8040-00-273-8713	Adhesive, paste, 1-gal	As required
4030-00-432-2516	Clevis, screw-pin	4
4020-00-240-2146	Cord, nylon, type III, 550-lb	As required
1670-00-434-5782	Coupling, airdrop, extraction force transfer w/4-ft cable	1
8135-00-664-6958	Cushioning material, packaging, cellulose wadding	As required
	Frame support for honeycomb stack 7:	1
5510-00-220-6146	Lumber, 2- by 4- by 48-in	(6)
5530-00-128-4981	Plywood, 3/4- by 6- by 28-in	(2)
5530-00-128-4981	Plywood, 3/4- by 28- by 48-in	(2)
	Frame support for honeycomb stack 8:	1
5510-00-220-6146	Lumber, 2- by 4- by 27-in	(6)
5530-00-128-4981	Plywood, 3/4- by 27- by 48-in	(2)
	Frame support for honeycomb stack 9:	1
5510-00-220-6146	Lumber, 2- by 4- by 48-in	(3)
5530-00-128-4981	Plywood, 3/4- by 14- by 48-in	(2)
1670-01-183-2678	Leaf, extraction line (line bag)	2
	Line extraction:	
1670-01-064-4454	60-ft (6-loop), type XXVI nylon (C-130 aircraft)	1
1670-01-062-6312	120-ft (6-loop), type XXVI nylon (C-141 aircraft)	1
5510-00-220-6146	Lumber, 2- by 4-in:	
	12-in	2
	14-in	2
	28-in	4

Table 4-1. Equipment required for rigging the 950B scoop-loader for a low-velocity airdrop (continued)

National Stock Number	Item	Quantity
5510-00-220-6148	Lumber, 2- by 6-in:	
	5-in	2
	28-in	2
	96-in	2
5510-00-220-6274	Lumber, 4- by 4- by 26-in	4
	Nail, steel wire, common:	
5315-00-010-4659	8d	As required
5315-00-010-4661	10d	As required
5315-00-010-4663	16d	As required
1670-00-753-3928	Pad, energy-dissipating, honeycomb,	
	3- by 36- by 96-in:	31 sheets
	12- by 7-in	(2)
	12- by 12-in	(2)
	12- by 13-in	(2)
	12- by 22-in	(2)
	12- by 24-in	(3)
	12- by 39-in	(12)
	12- by 51-in	(6)
	12- by 68-in	(1)
	18- by 28-in	(22)
	24- by 36-in	(8)
	28- by 15-in	(8)
	36- by 60-in	(1)
	48- by 10-in	(1)
	48- by 12-in	(5)
	48- by 14-in	(10)
	48- by 27-in	(7)
	48- by 28-in	(13)
	96- by 36-in	(4)
	Parachute, cargo:	
1670-01-016-7841	G-11C	8
1670-00-040-8135	28-ft, extraction, heavy-duty	2

Table 4-1. Equipment required for rigging the 950B scoop-loader for a low-velocity airdrop (continued)

National Stock Number	Item	Quantity
	Parachute stowage platform:	1
5510-00-220-6146	Lumber, 2- by 4-in:	
	5 1/2-in	(2)
	18-in	(2)
	23-in	(4)
	38-in	(2)
	42-in	(3)
	96-in	(2)
5510-00-220-6148	Lumber, 2- by 6-in:	
	12-in	(4)
	33 7/8-in	(2)
	42-in	(2)
	48 1/4-in	(4)
	51-in	(1)
5530-00-128-4981	Plywood, 3/4-in:	
	8- by 51-in	(1)
	8- by 96-in	(1)
	Platform, airdrop, type V, 24-ft:	1
1670-01-162-2372	Clevis, load tiedown	(54)
1670-01-162-2376	Extraction bracket assembly	(1)
5530-00-128-4981	Plywood, 3/4-in:	
	4- by 31-in	2
	12- by 5-in	2
	12- by 34-in	2
	12- by 36-in	2
	12- by 44-in	2
	18- by 28-in	1
	28- by 15-in	1
	96- by 26-in	1
	96- by 36-in	1

Table 4-1. Equipment required for rigging the 950B scoop-loader for a low-velocity airdrop (continued)

National Stock Number	Item	Quantity
1670-01-097-8817	Release, cargo parachute, M-2, modified	1
	Reinforced toggle shaft	(1)
	Hardened sleeve bolts	(4)
	2 3/8-in steel spacers	(4)
	Hardened clevis bolts w sleeves	(2)
	Sling, cargo, airdrop:	
	For deployment line:	
1670-00-753-3631	9-ft (3-loop), type X nylon webbing or	1
1670-01-062-6304	9-ft (2-loop), type XXVI nylon webbing	1
	For riser extension:	
1670-00-432-2494	120-ft (3-loop), type X nylon webbing or	8
1670-01-062-6311	120-ft (2-loop), type XXVI nylon webbing	8
	For suspension:	
1670-00-432-2505	11-ft (4-loop), type XXVI nylon webbing or	2
1670-01-062-6310	11-ft (4-loop), type XXVI nylon webbing	2
1670-00-432-2506	12-ft (4-loop), type XXVI nylon webbing or	2
1670-01-062-6307	12-ft (4-loop), type XXVI nylon webbing	2
1670-00-040-8219	Strap, parachute release, multicut, comes w 3 knives	2
7510-00-266-5016	Tape, adhesive, 2-in	As required
1670-00-937-0271	Tiedown assembly, 15-ft	58
	Webbing:	
8305-00-268-2411	Cotton, type I, 1/4-inch	As required
8305-00-082-5752	Nylon, tubular, 1/2-in, natural	As required
8305-00-261-8584	Nylon, type X, treated, olive drab	As required

CHAPTER 5

RIGGING 950B SCOOP-LOADER WITH A FIVE-FOOT FORKLIFT ATTACHMENT FOR LOW-VELOCITY AIRDROP ON THE TYPE V PLATFORM

CAUTION
This load exceeds the maximum allowable weight for low-velocity airdrop for training purposes from C-141 aircraft.

5-1. Description of Load

The 950B scoop-loader with a five-foot forklift attachment is rigged on a 28-foot, type V platform for low-velocity airdrop. The load requires eight G-11 cargo parachutes with a line bag. A drawing of a scoop-loader with tiedown provisions is shown in Figure 5-1.

Note: This drawing is not drawn to scale.

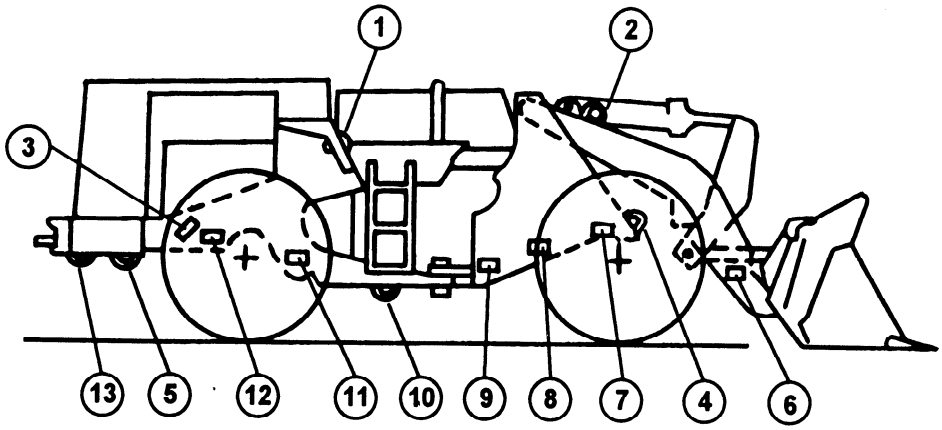

1. Rear suspension point
2. Front suspension point
3. Rear lift eye
4. Front lift eye
5. Air transport trailer hitch
6. Tiedown provision 1
7. Tiedown provision 2
8. Tiedown provision 3
9. Tiedown provision 4
10. Tiedown provision 5
11. Tiedown provision 6
12. Tiedown provision 7
13. Tiedown provision 8

Figure 5-1. Scoop-loader with tiedown provisions

5-2. Preparing Platform

Prepare a 28-foot, type V airdrop platform using 56 tiedown clevises as shown in Figure 5-2.

Note: The nose bumper may or may not be installed.

Step:

1. Inspect, or assemble and inspect, the platform as outlined in TM 10-1670-268-20&P/TO 13C7-52-22.
2. Install a tandem link on the front of each platform side rail using holes 1, 2, and 3.
3. Install four suspension links to each side rail using bushing holes 6, 7, and 8; 22, 23, and 24; 33, 34, and 35; 49, 50, and 51.
4. Install clevises on bushings 3 and 4 on the first set of suspension links.
5. Install a clevis on bushing 4 on the second set of suspension links.
6. Install clevises on bushings 1, 2, and 3 on the third set of suspension links.
7. Install clevises on bushings 1 and 4 of the fourth set of suspension links.
8. Starting at the front of the platform, install clevises on each platform side rail using the bushings bolted on holes 10, 14, 17, 19, 20, 26, 27, 28, 37, 43, 44, 45, *46, 47, 53, 54, and 56.
9. Starting at the front of the platform, number the clevises bolted to the right side rail from 1 through 27 and those bolted to the left side rail from 1A through 27A.

** Denotes a double clevis. Install a double clevis according to FM 10-500-2/TO 13C7-1-5.*

Figure 5-2. Platform prepared

5-3. Preparing and Positioning Honeycomb Stacks

Prepare the honeycomb stacks for the scoop-loader according to Paragraph 4-3 and as shown in Figures 4-3 through 4-14. Position them on the platform according to Figures 5-3 and 5-4.

Notes: 1. Measurements from the front of the platform are taken from the front edge of the first panel or the crease of the nose bumper, NOT from the front edge of the nose bumper.
2. Measurements from the rear of the platform are taken from the rear edge of the last panel.

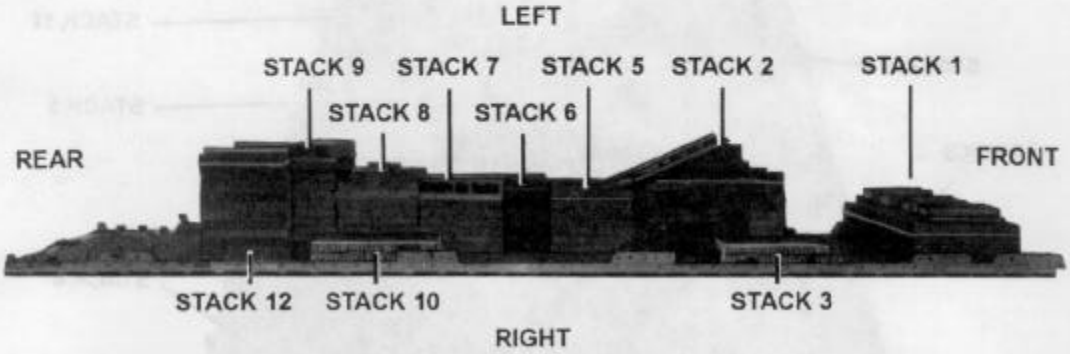

Stack Number	Position on Platform
	Place stack:
1	Centered 9 1/4 inches from the front edge of the platform.
2	Centered 41 inches from stack 1.
3	30 inches from stack 1, flush against right side of stack 2.
4	30 inches from stack 1, flush against left side of stack 2.
5	Centered flush against stack 2.
6	Centered flush against stack 5.
7	Centered flush against stack 6.
8	Centered flush against stack 7.
9	Centered flush against stack 8.
10	86 inches from stack 3, flush against right side of stack 8.
11	86 inches from stack 4, flush against left side of stack 8.
12	17 1/2 inches from right rail, flush against stack 9.
13	17 1/2 inches from left rail, flush against stack 9.

Figure 5-3. Honeycomb stacks positioned on platform

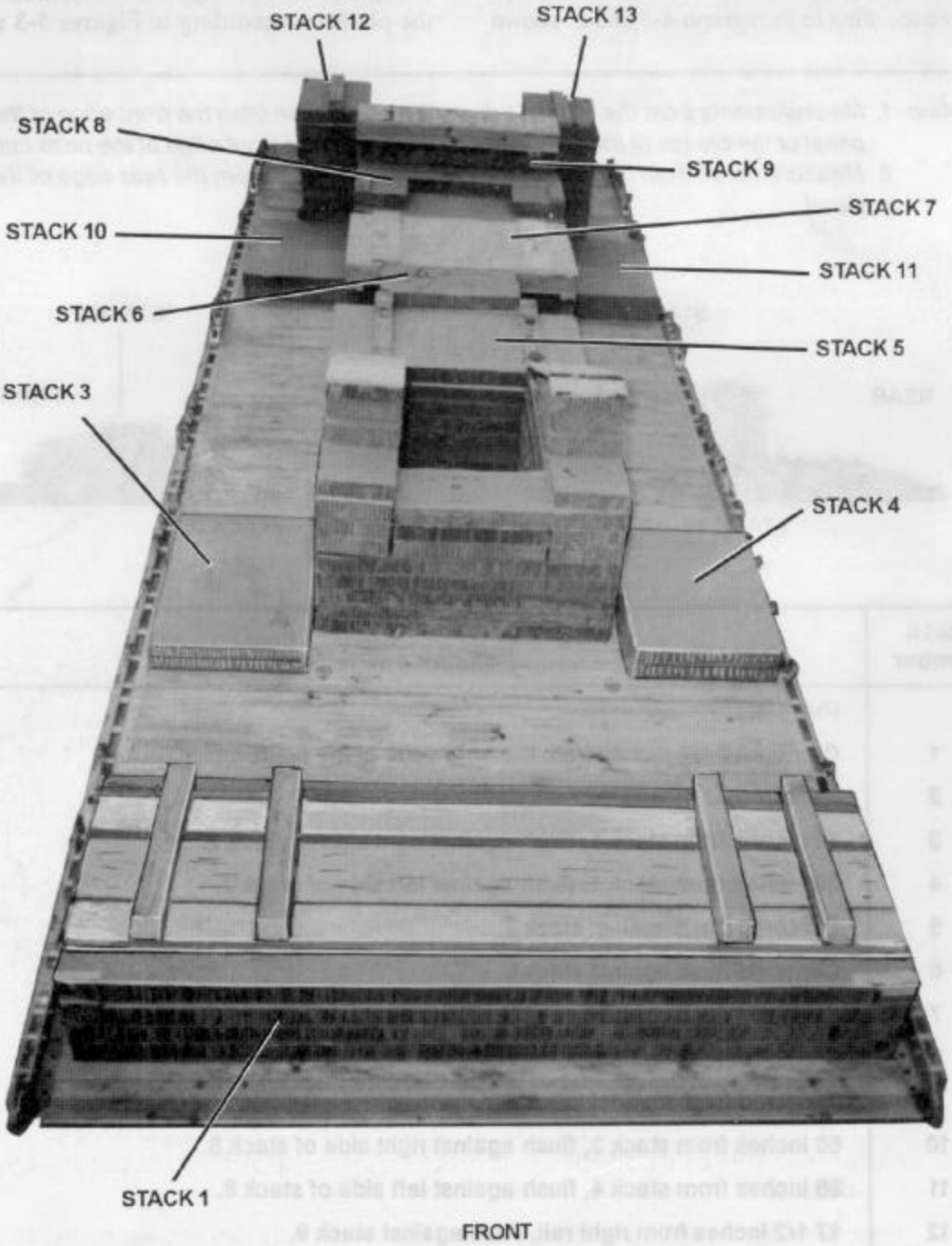

Figure 5-4. Front view of honeycomb stacks positioned on platform

5-4. Preparing Scoop-loader

Prepare the 950B scoop-loader according to Paragraph 4-4 and as shown in Figures 4-18 through 4-22. Prepare the rear axle using two 15-foot lashings as shown in Figure 5-5.

(1) Use two 15-foot lashings to keep wheels level. Connect one lashing to each side of the rear axle. Secure both lashings on top of the engine compartment with two D-rings and a load binder.

Note: These lashings were installed for positioning purposes only. After scoop-loader has been positioned, remove the two 15-foot lashings.

Figure 5-5. Rear wheel axle prepared

5-5. Installing Lifting Slings

Install two 11-foot (4-loop), type XXVI nylon webbing slings and two 12-foot (4-loop), type XXVI nylon webbing slings for lifting slings. Bolt the slings to the scoop-loader as shown in Figure 5-6.

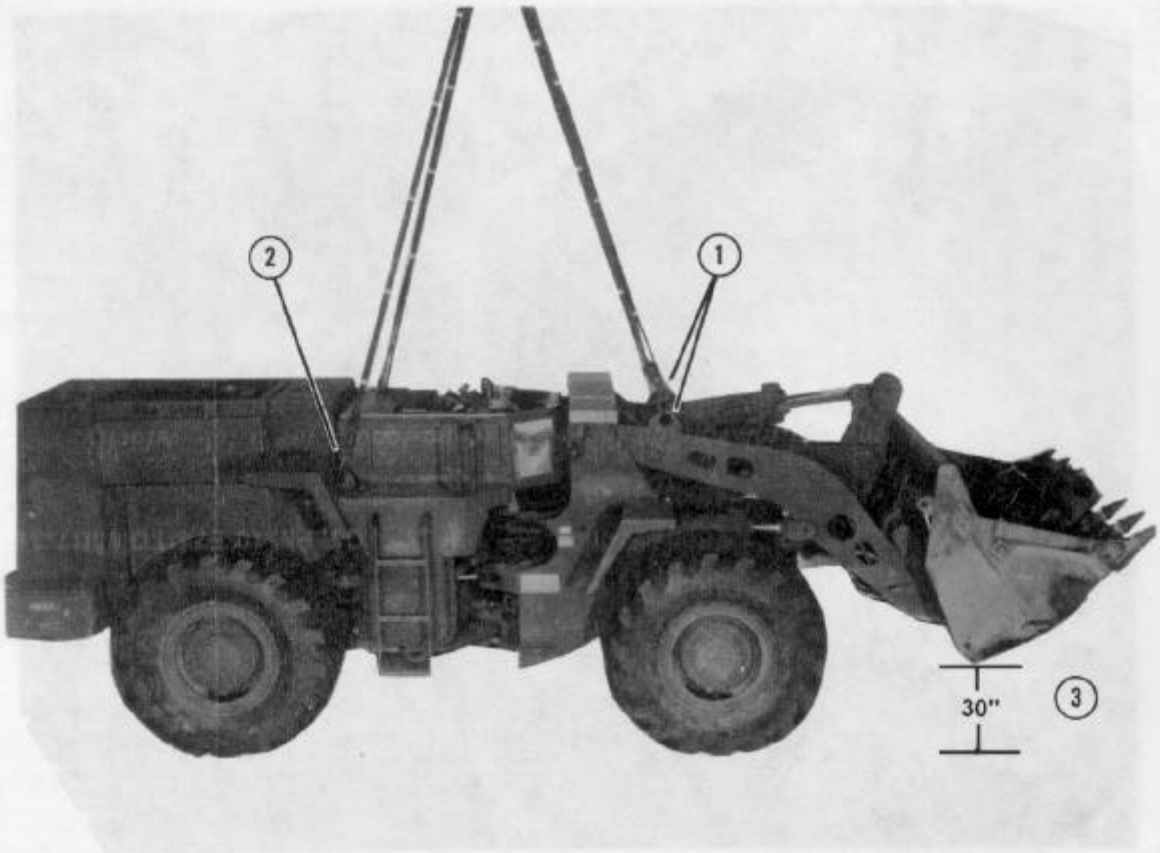

1. Bolt the 11-foot (4-loop), type XXVI nylon webbing slings to the front lifting points with two screw-pin clevises.
2. Bolt the 12-foot (4-loop), type XXVI nylon webbing slings to the rear lifting points with two screw-pin clevises.
3. Raise the bucket 30 inches above the ground, and tilt it completely to the rear.

Figure 5-6. Lifting slings installed

5-6. Positioning Scoop-loader

Position the scoop-loader on the platform stacks as shown in Figure 5-7.

CAUTION
The bucket must be centered between the platform side rails with a 9-inch overhang to the front.

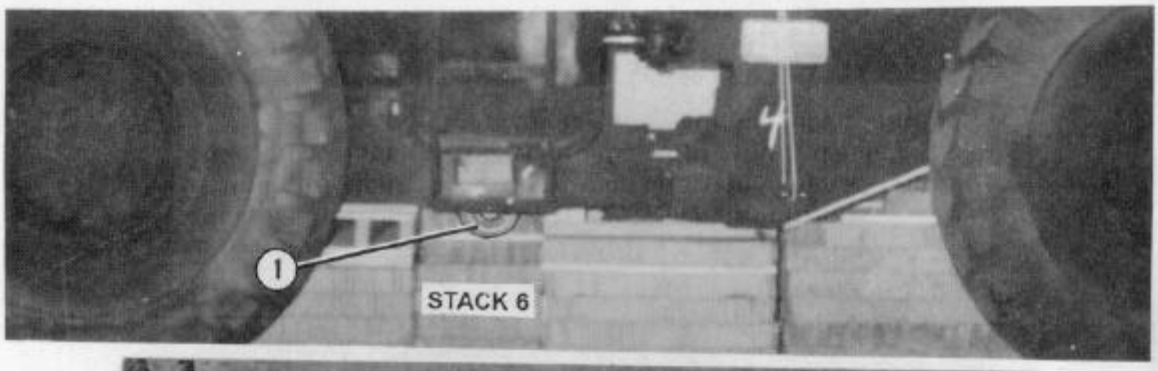

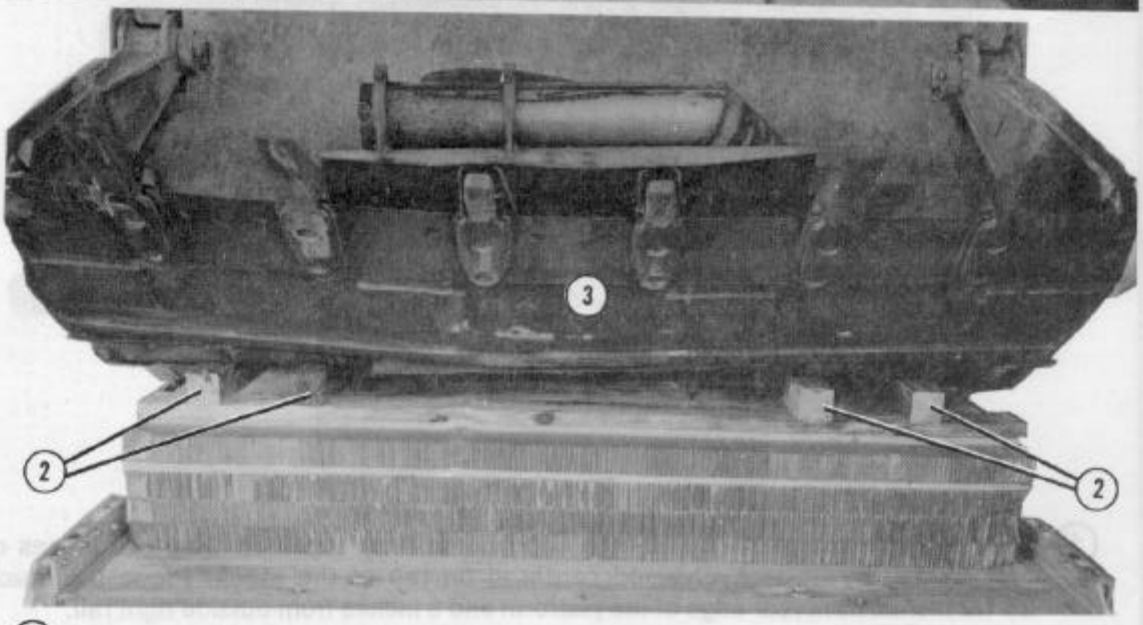

1. Center the fifth tiedown provision on stack 6.
2. Position and adjust four pieces of 4- by 4- by 26-inch lumber on stack 1 as shown above.
3. Lower the bucket onto stack 1. Make sure the bucket is moved to the full rear position.
4. Remove the lifting slings from the scoop loader (not shown).

Note: Toenail the 4- by 4- by 26-inch pieces of lumber after the bucket is lowered.

Figure 5-7. Scoop-loader positioned

5-7. Preparing Scoop-loader After Positioning

After the scoop-loader has been positioned on the platform, prepare it according to Paragraph 4-7 and as shown in Figure 4-25.

5-8. Preparing and Positioning Honeycomb Stacks for Lifting Forks

Prepare and position honeycomb stacks for lifting forks as shown in Figure 5-8.

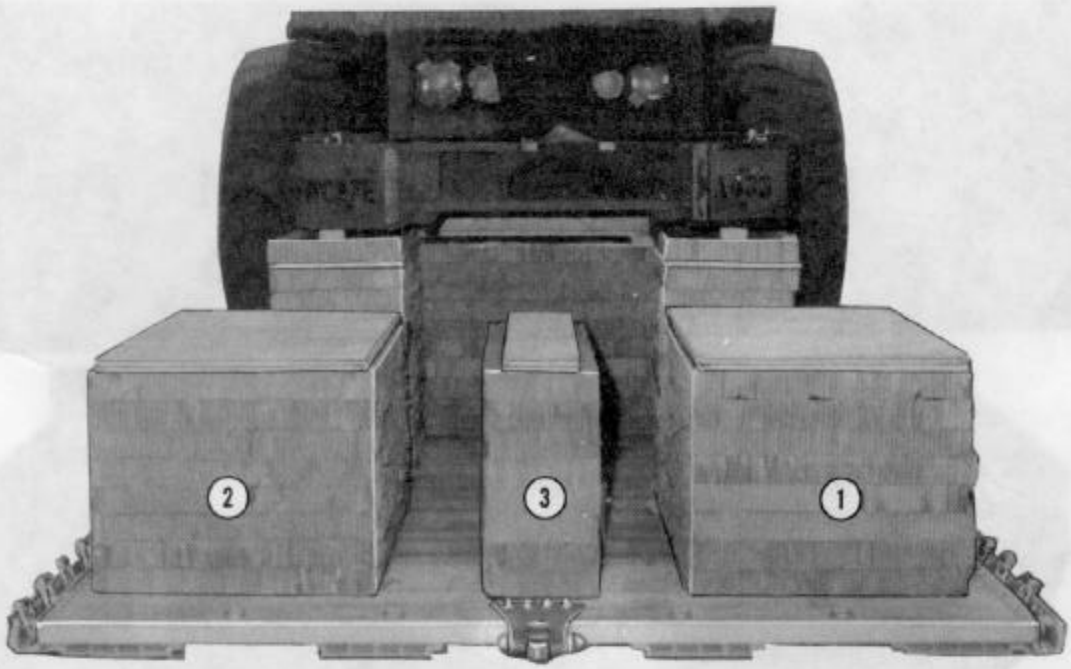

(1) Glue eight pieces of 29- by 36-inch honeycomb flush together. Glue two pieces of 3/4- by 28- by 36-inch plywood centered on top of the stack. Place the stack 18 1/2 inches from rear edge of the platform and 3 inches from outside right rail.

(2) Glue eight pieces of 29- by 36-inch honeycomb flush together. Glue two pieces of 3/4- by 28- by 36-inch plywood centered on top of the stack. Place the stack 18 1/2 inches from rear edge of the platform and 3 inches from the outside left rail.

(3) Glue eight pieces of 12- by 36-inch honeycomb flush together. Glue two pieces of 3/4- by 8- by 36-inch plywood centered on top of the stack. Place the stack 18 1/2 inches from rear edge of the platform and centered between stacks 1 and 2.

Figure 5-8. Honeycomb stacks for lifting forks prepared and positioned

5-9. Positioning Lifting Forks

Position the lifting forks on the rear honeycomb stacks as shown in Figure 5-9.

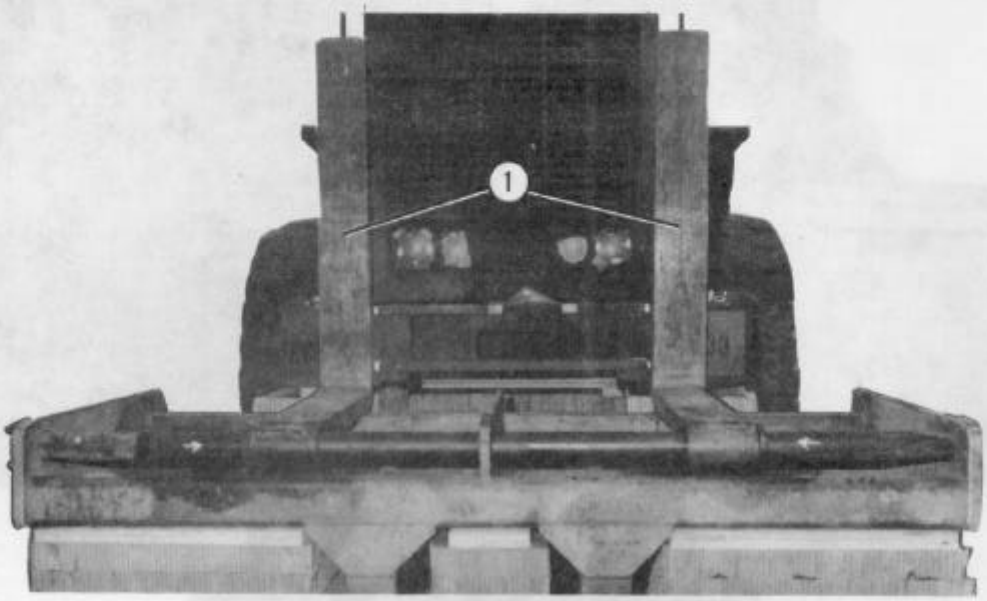

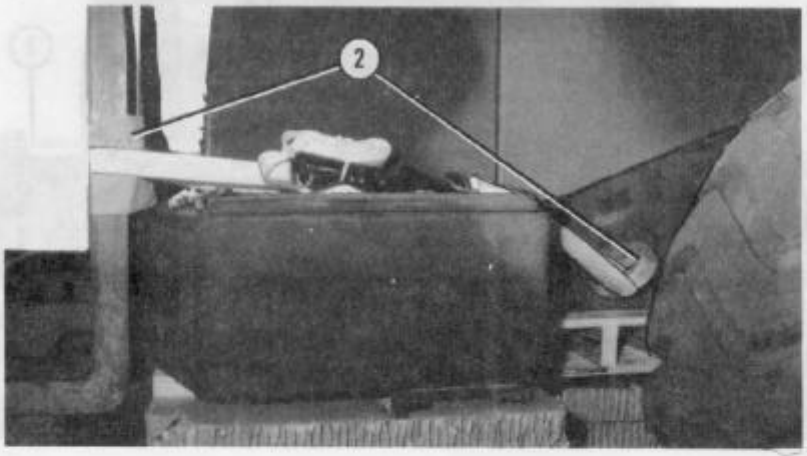

(1) Position the lifting forks on the honeycomb stacks with the forks in the upright position against the rear of the scoop-loader. The forks must be adjusted inward and vertically aligned with the outer edge of the engine compartment.

(2) Pad the right fork with cellulose wadding approximately 10 inches from the bottom. Run a 15-foot lashing around the fork and through rear lift eye (provision). Secure lashing with a D-ring and load binder. Repeat this step for the left fork.

Figure 5-9. Lifting forks positioned

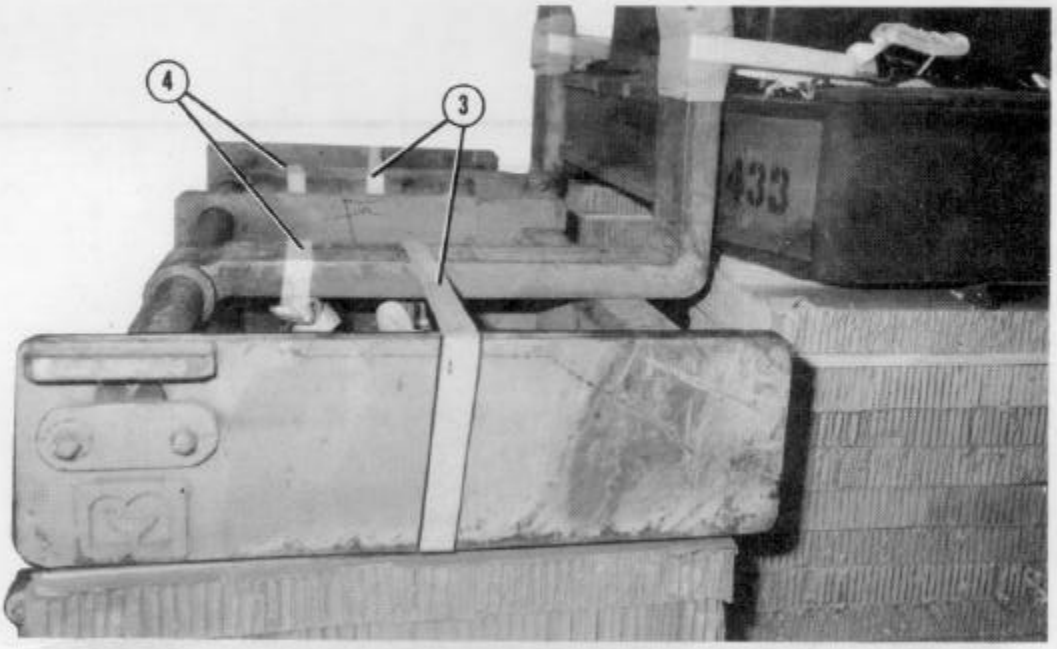

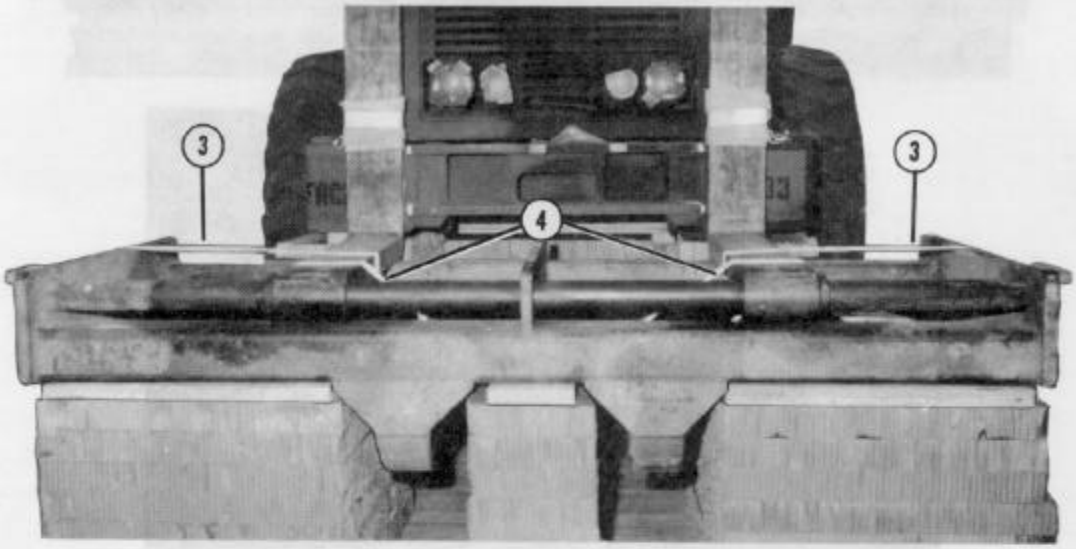

(3) Run a 15-foot lashing around the right fork and around the outside fork frame. Secure the lashing on the inside with a D-ring and load binder. Repeat this step for the left fork.

(4) Run a 15-foot lashing around the right fork and around the inside fork frame. Secure the lashing on the inside with a D-ring and load binder. Repeat this step for the left fork.

Note: Make sure all sharp edges and corners are padded.

Figure 5-9. Lifting forks positioned (continued)

5-10. Lashing Lifting Forks

Lash the lifting forks to the platform using four 15-foot tiedown assemblies as shown in Figure 5-10.

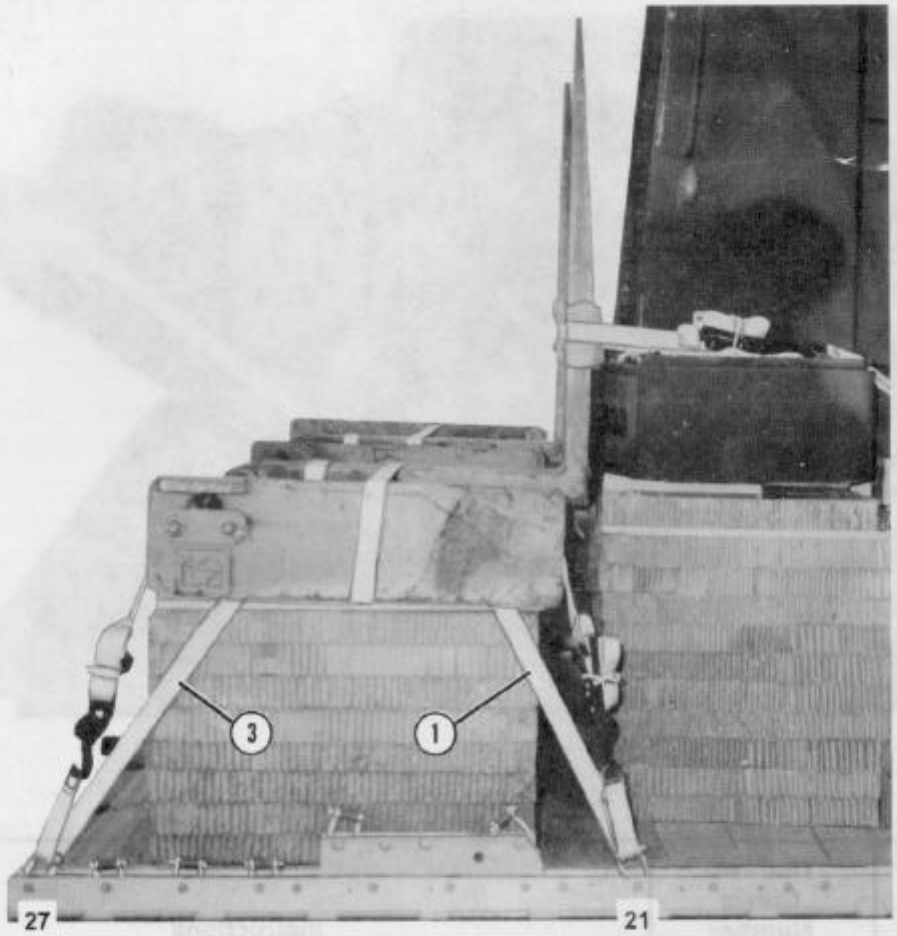

Lashing Number	Tiedown Clevis Number	Instructions
		Pass lashing:
1	21	Around fork frame, front right side.
2	21A	Around fork frame, front left side.
3	27	Around fork frame, rear right side.
4	27A	Around fork frame, rear left side.

Figure 5-10. Lifting forks lashed

5-11. Lashing Scoop-Loader

Lash the scoop-loader to the platform with forty 15-foot tiedown assemblies as shown in Figures 5-11 through 5-15.

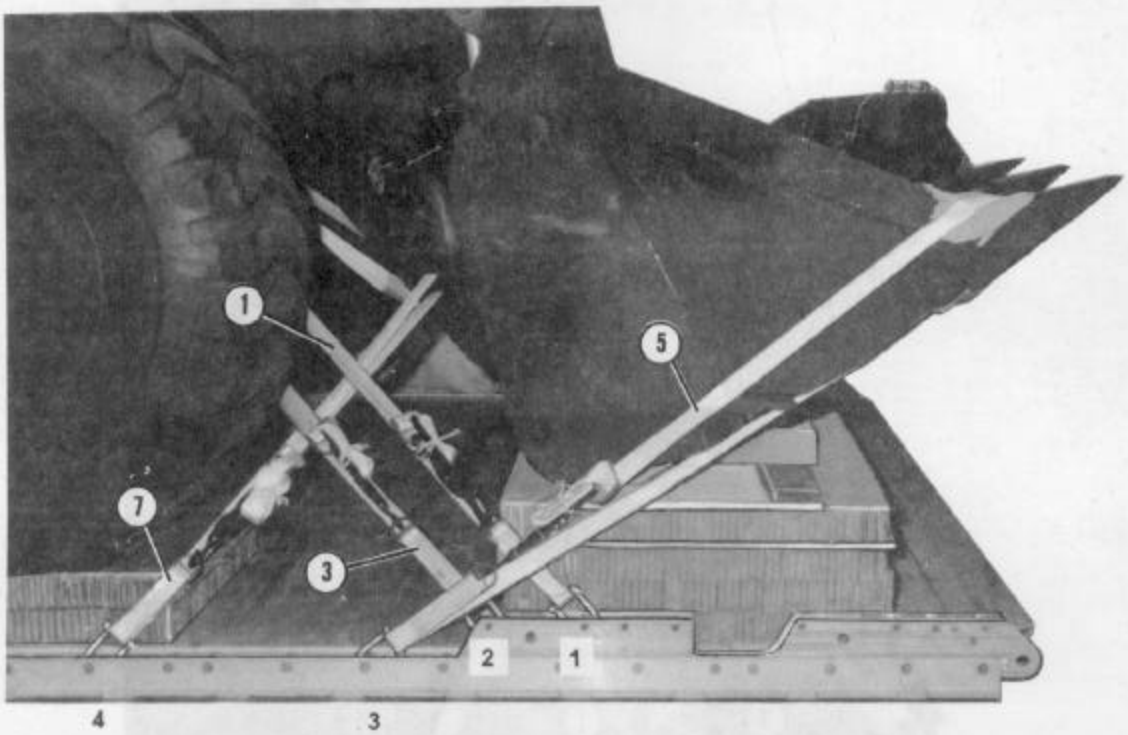

Lashing Number	Tiedown Clevis Number	Instructions
		Pass lashing:
1	1	Through front lift eye, right side of vehicle.
2	1A	Through front lift eye, left side of vehicle.
3	2	Through tiedown provision 2, right side of vehicle.
4	2A	Through tiedown provision 2, left side of vehicle.
5	3	Around the corner of the bucket, right side of vehicle.
6	3A	Around the corner of the bucket, left side of vehicle.
7	4	Through tiedown provision 1, right side of vehicle.
8	4A	Through tiedown provision 1, left side of vehicle.

Figure 5-11. Lashings 1 through 8 installed

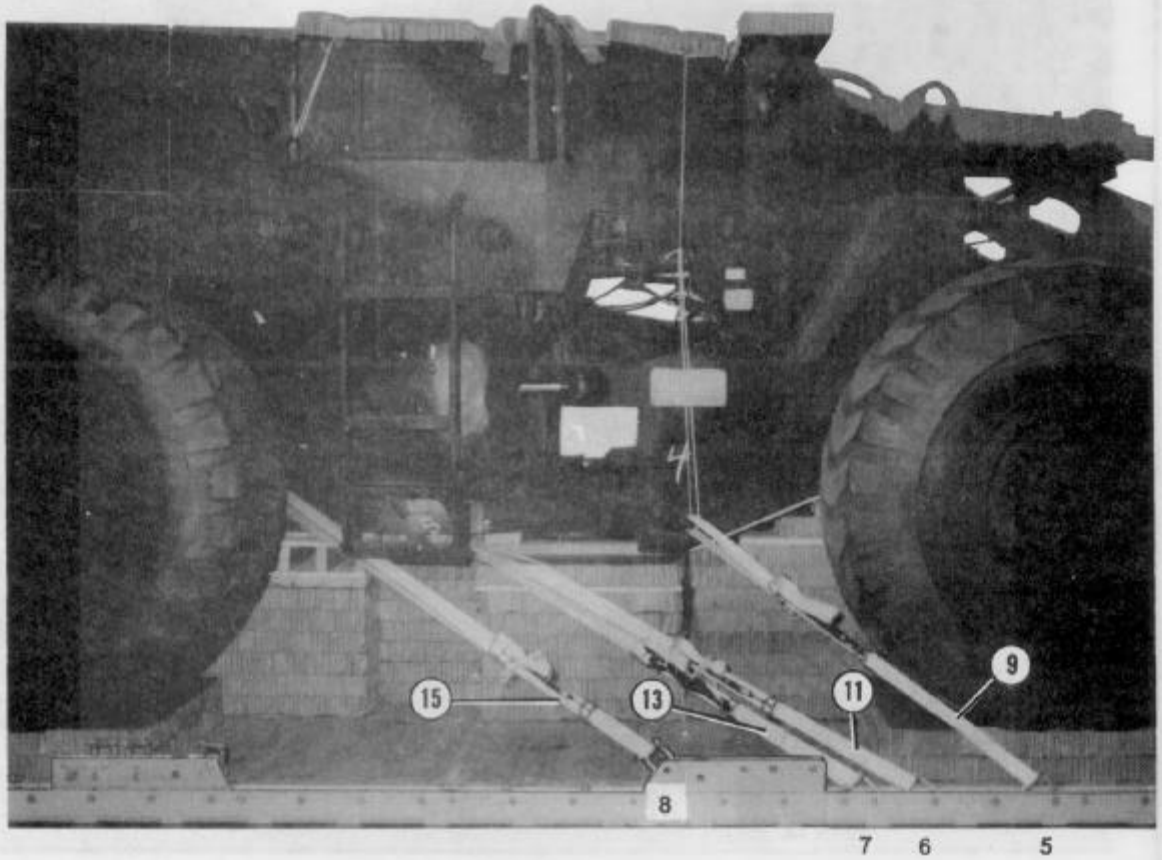

Lashing Number	Tiedown Clevis Number	Instructions
		Pass lashing:
9	5	Through tiedown provision 4, right side of vehicle.
10	5A	Through tiedown provision 4, left side of vehicle.
11	6	Through tiedown provision 5, right side of vehicle.
12	6A	Through tiedown provision 5, left side of vehicle.
13	7	Through tiedown provision 5, right side of vehicle.
14	7A	Through tiedown provision 5, left side of vehicle.
15	8	Through tiedown provision 6, right side of vehicle.
16	8A	Through tiedown provision 6, left side of vehicle.

Figure 5-12. Lashings 9 through 16 installed

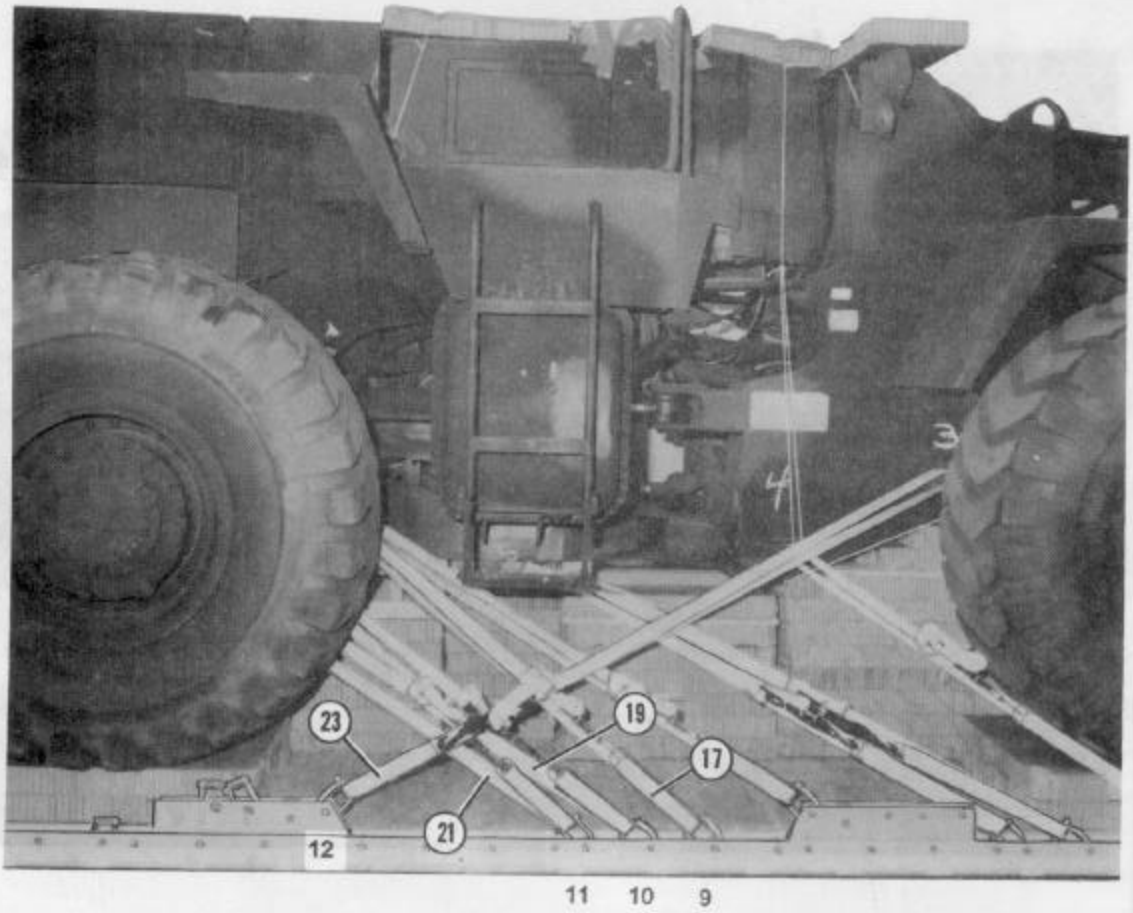

Lashing Number	Tiedown Clevis Number	Instructions
		Pass lashing:
17	9	Through tiedown provision 6, right side of vehicle.
18	9A	Through tiedown provision 6, left side of vehicle.
19	10	Through tiedown provision 7, right side of vehicle.
20	10A	Through tiedown provision 7, left side of vehicle.
21	11	Through tiedown provision 7, right side of vehicle.
22	11A	Through tiedown provision 7, left side of vehicle.
23	12	Through tiedown provision 3, right side of vehicle.
24	12A	Through tiedown provision 3, left side of vehicle.

Figure 5-13. Lashings 17 through 24 installed

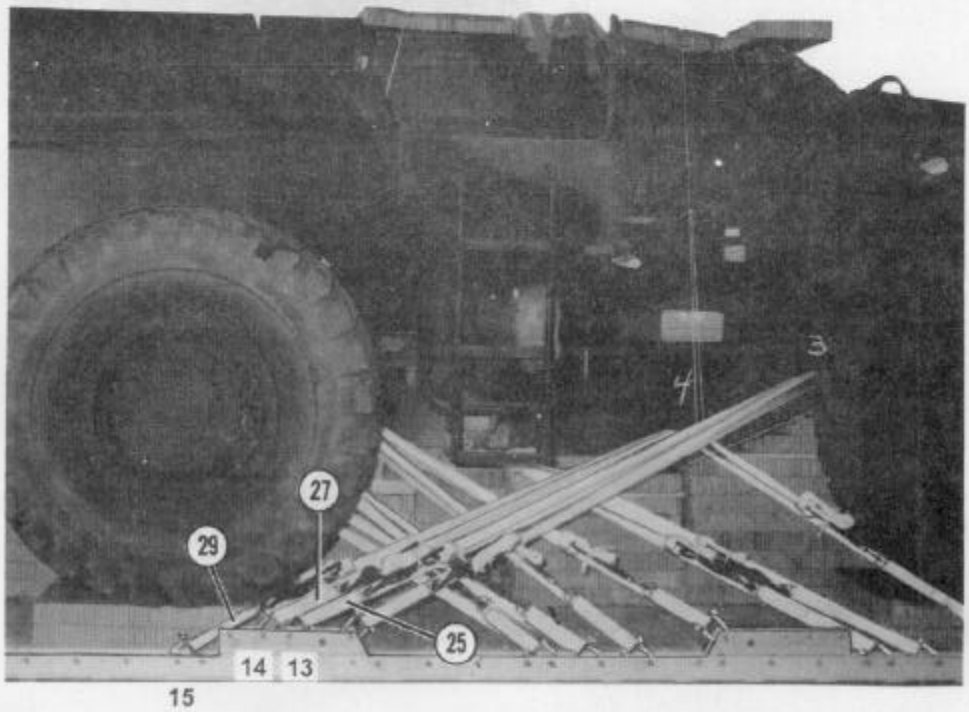

Lashing Number	Tiedown Clevis Number	Instructions
		Pass lashing:
25	13	Through tiedown provision 3, right side of vehicle.
26	13A	Through tiedown provision 3, left side of vehicle.
27	14	Through tiedown provision 4, right side of vehicle.
28	14A	Through tiedown provision 4, left side of vehicle.
29	15	Through tiedown provision 4, right side of vehicle.
30	15A	Through tiedown provision 4, left side of vehicle.

Figure 5-14. Lashings 25 through 30 installed

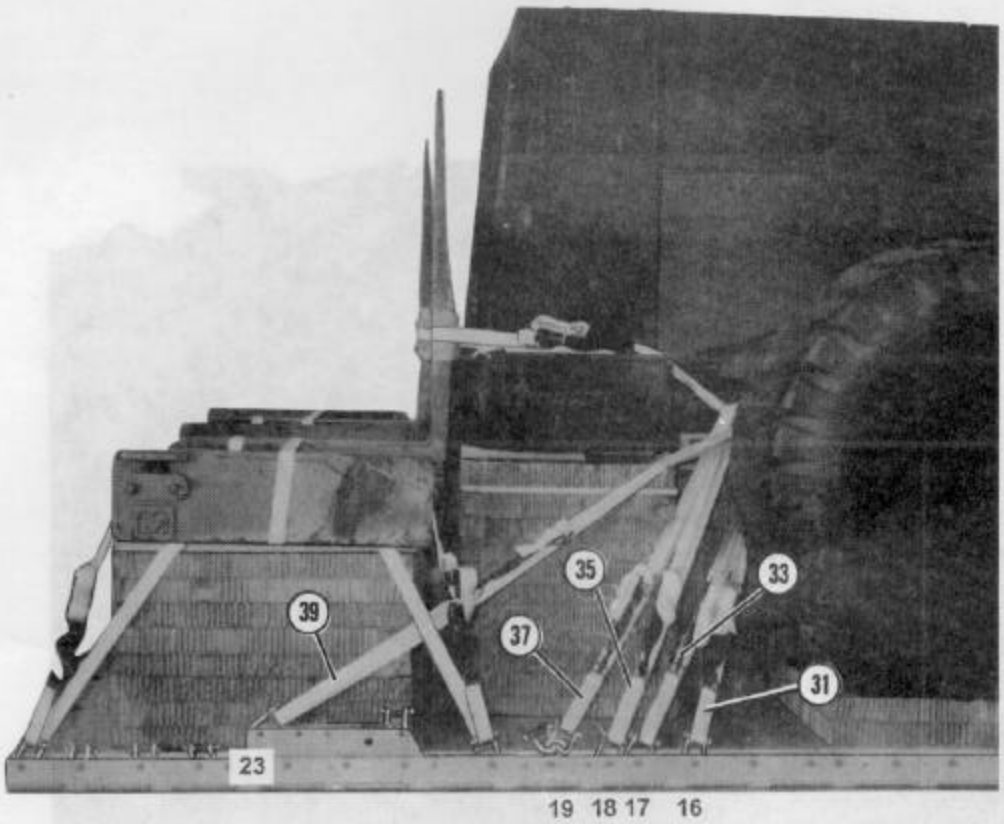

Lashing Number	Tiedown Clevis Number	Instructions
		Pass lashing:
31	16	Through tiedown provision 7, right side of vehicle.
32	16A	Through tiedown provision 7, left side of vehicle.
33	17	Through tiedown provision 7, right side of vehicle.
34	17A	Through tiedown provision 7, left side of vehicle.
35	18	Through rear lift eye, right side of vehicle.
36	18A	Through rear lift eye, left side of vehicle.
37	19	Through rear lift eye, right side of vehicle.
38	19A	Through rear lift eye, left side of vehicle.
39	23	Through tiedown provision 7, right side of vehicle.
40	23A	Through tiedown provision 7, left side of vehicle.

Figure 5-15. Lashings 31 through 40 installed

5-12. Installing and Safetying Suspension Slings

Install four 11-foot (4-loop), type XXVI nylon webbing suspension slings. Safety suspension slings according to FM 10-500-2/TO 13C7-1-5 and as shown in Figure 5-16.

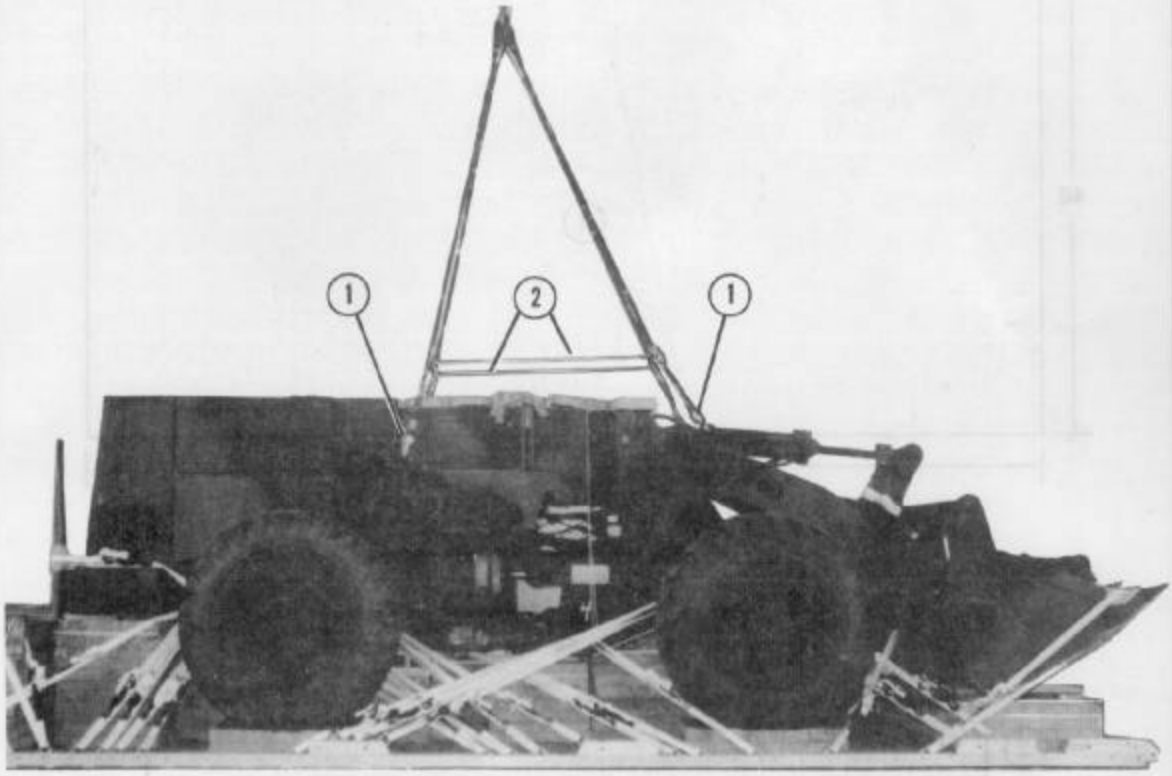

(1) Bolt the 11-foot (4-loop), type XXVI nylon webbing slings to the front and rear lifting points with four screw-pin clevises.

(2) Use 1/2-inch tubular nylon webbing to form a deadman's tie on the suspension slings.

Figure 5-16. Suspension slings installed and safetied

5-13. Building and Installing Parachute Stowage Platform

Build and install the parachute stowage platform as given below.

a. Building Parachute Stowage Platform. Build the platform as shown in Figure 5-17.

Notes: 1. These drawings are not drawn to scale.
2. Circled numbers refer to item numbers.
3. All measurements are given in inches.

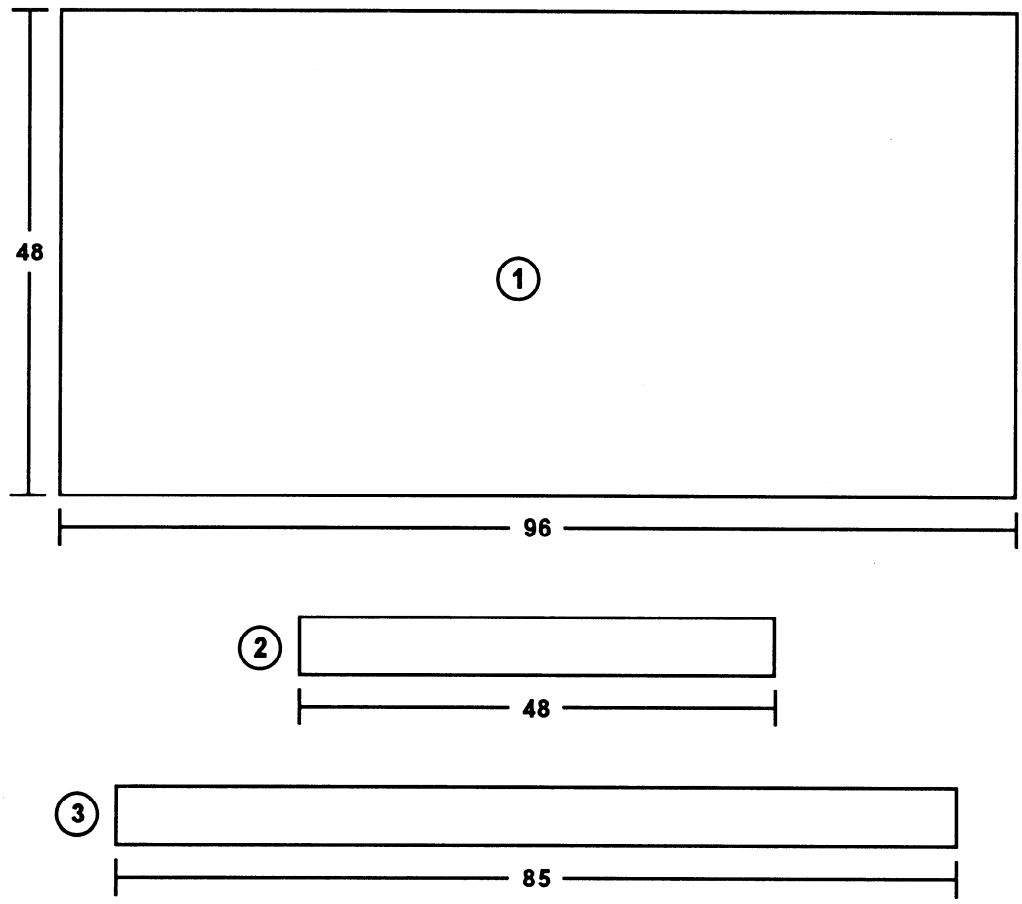

Item Number	Pieces	Width (Inches)	Length (Inches)	Material
1	1	48	96	3/4-inch plywood
2	2	6	48	2- by 6-inch lumber
3	2	6	85	2- by 6-inch lumber

Figure 5-17. Parachute stowage platform built

Notes: *1. This drawing is not drawn to scale.*
2. Circled numbers refer to item numbers on previous page.
3. All measurements are given in inches.

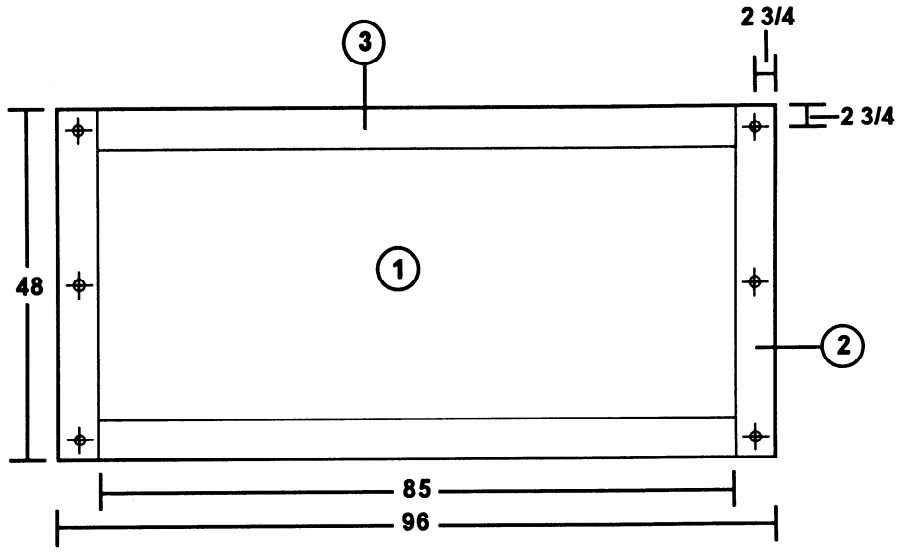

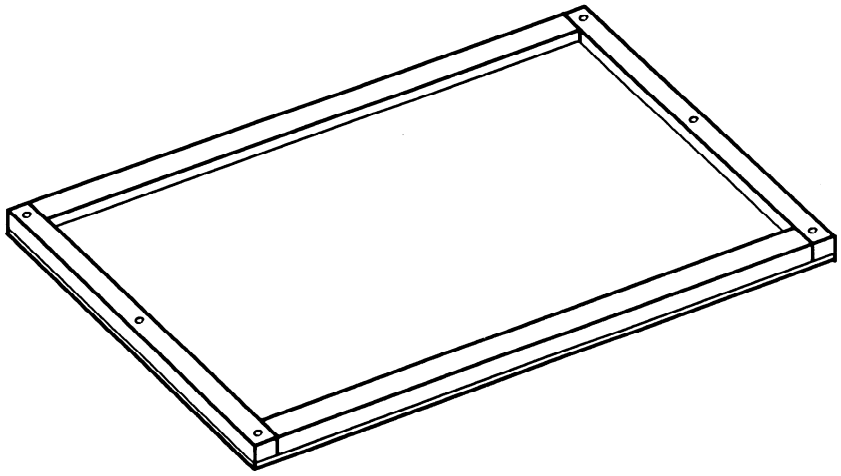

Step:

1. Use a 3/4- by 48- by 96-inch of plywood.
2. Nail a 2- by 6- by 48-inch piece of lumber along each side of the plywood using eightpenny nails.
3. Nail a 2- by 6- by 85-inch piece of lumber along the front and rear of the plywood using eight-penny nails.
4. Drill six 2-inch holes as shown.

Figure 5-17. Parachute stowage platform built (continued)

b. Installing Parachute Stowage Platform. Install the parachute stowage platform as shown in Figure 5-18.

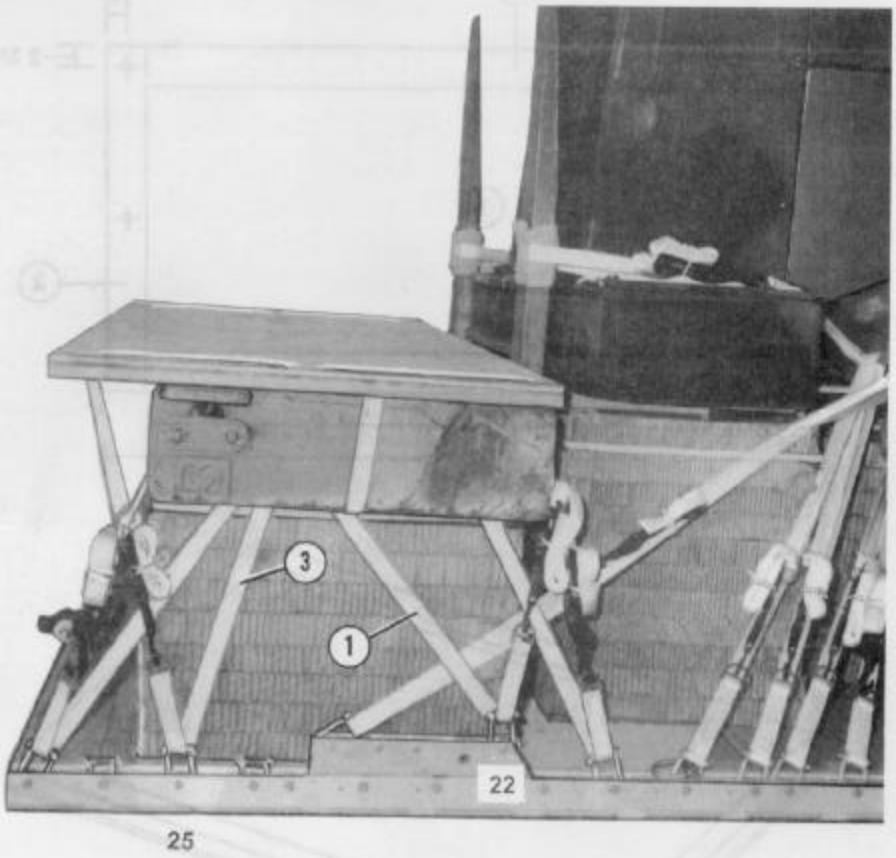

Lashing Number	Tiedown Clevis Number	Instructions
		Pass lashing:
1	22	Through center and forward hole in stowage platform, right side.
2	22A	Through center and forward hole in stowage platform, left side.
3	25	Through center and aft hole in stowage platform, right side.
4	25A	Through center and aft hole in stowage platform, left side.

Figure 5-18. Parachute stowage platform installed

5-14. Stowing Cargo Parachutes

Stow eight G-11 cargo parachutes on the load according to FM 10-500-2/TO 13C7-1-5 and as shown in Figure 5-19.

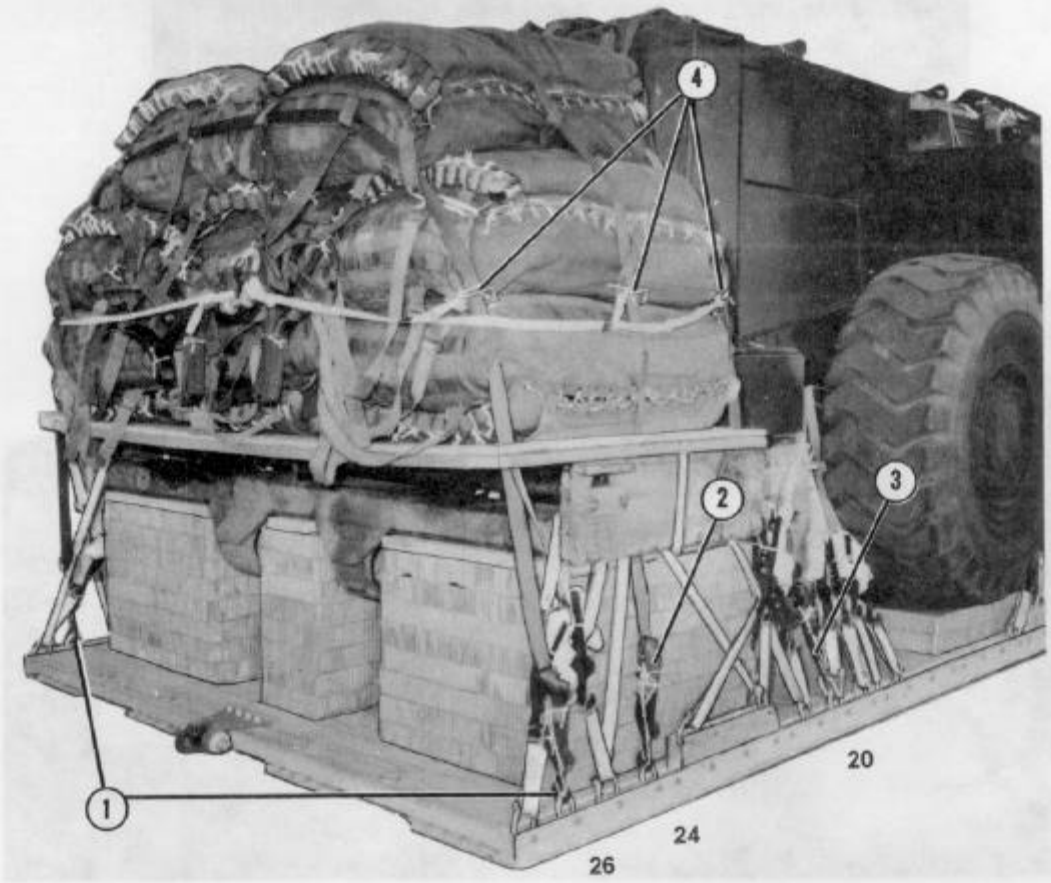

(1) Run one length of type X nylon webbing from clevis 26, through the rear carrying handles, and over to clevis 26A.

(2) Run one length of type X nylon webbing from clevis 24, through the center carrying handles, and over the top to clevis 24A.

(3) Run one length of type X nylon webbing from double clevis 20, through the front carrying handles, and over the top to double clevis 20A.

Note: Safety the load binders to the stowage platform with lengths of type III nylon cord according to FM 10-500-2/TO 13C7-1-5.

(4) Attach parachute release knives as outlined in FM 10-500-2/TO 13C7-1-5.

Figure 5-19. Cargo parachute stowed and secured

5-15. Installing M-2 Release Assembly

Install the M-2 parachute release assembly (modified for 42,000-pound capacity) as shown in FM 10-500-2/TO 13C7-1-5 with the exceptions outlined in Figure 5-20.

CAUTION
Be sure the modified M-2 parachute release includes these strengthened items: one reinforced toggle shaft, four hardened sleeve bolts, four 2 3/8-inch steel spacers, and two hardened clevis bolts with sleeves.

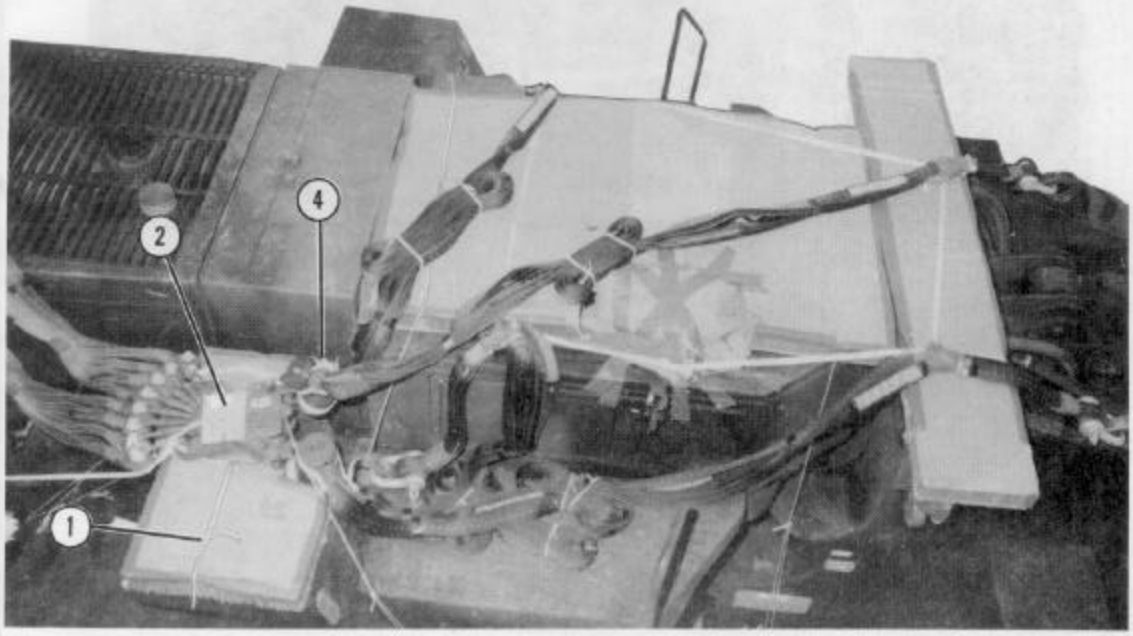

1. Tie a piece of honeycomb on the right rear fender.
2. Place the modified M-2 release assembly on the honeycomb.
3. Safety the riser extensions between the rear handle with type I, 1/4-inch cotton webbing (not shown).

Note: Some riser extension stows may have to be cut to allow the riser extensions to reach the release.

4. Route the suspension slings to the right side of the scoop-loader. Safety the suspension sling keepers according to FM 10-500-2/TO 13C7-1-5.

Figure 5-20. Modified M-2 parachute release assembly installed

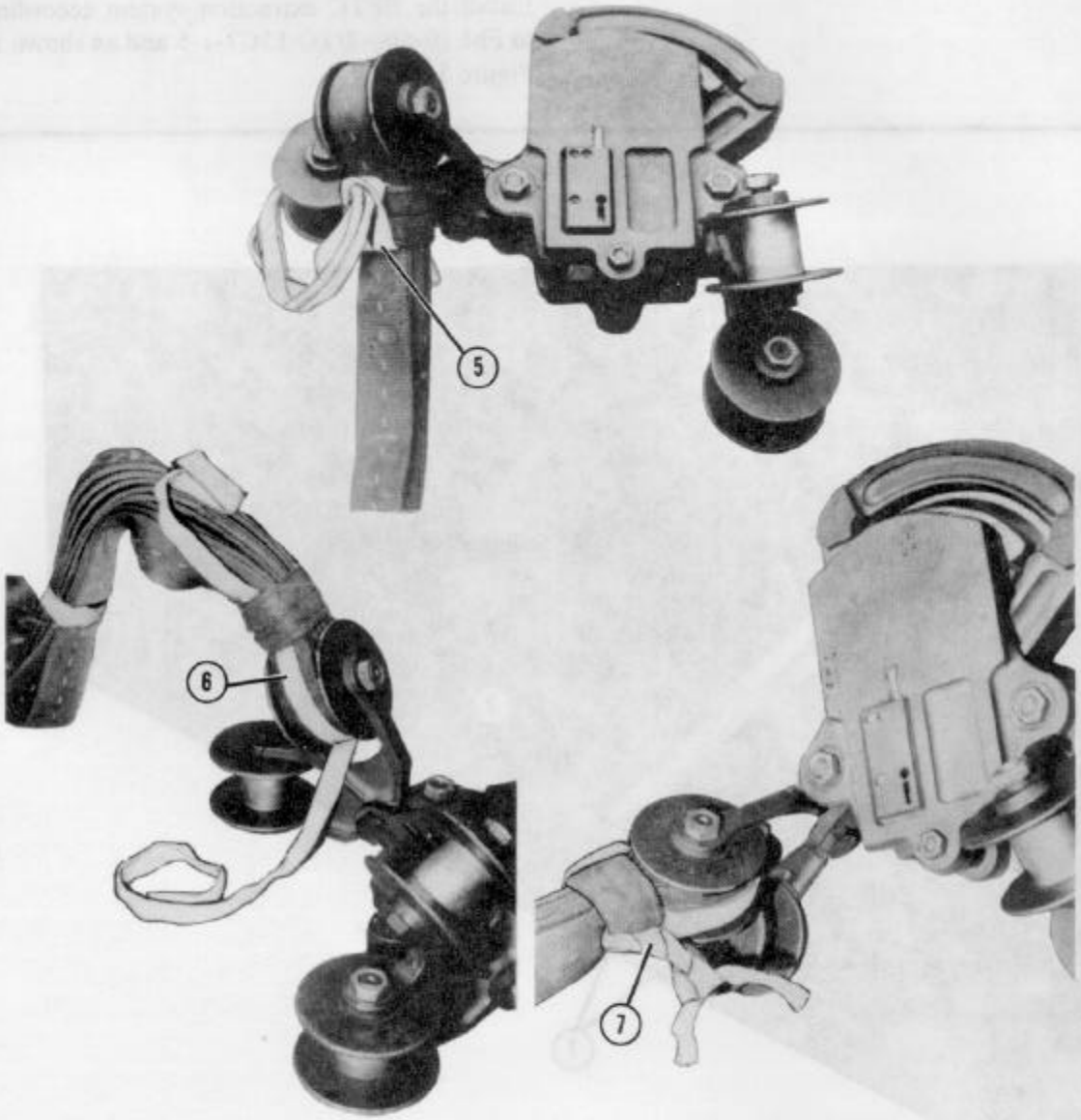

(5) Form girth hitch around one side of a sling keeper with a 60-inch length of 1/2-inch tubular nylon webbing so that the running ends are of equal length.

(6) Bring both running ends around the loop of the sling and through the suspension link. Bring one running end through the sling keeper.

(7) Tie the two running ends together with two half hitches and locking knot. Pull the sling keeper as tightly as possible toward the sling loop.

(8) Secure the other three suspension sling keepers in the same manner (not shown).

Figure 5-20. Modified M-2 parachute release assembly installed (continued)

5-16. Installing Extraction System

Install the EFTC extraction system according to FM 10-500-2/TO 13C7-1-5 and as shown in Figure 5-21.

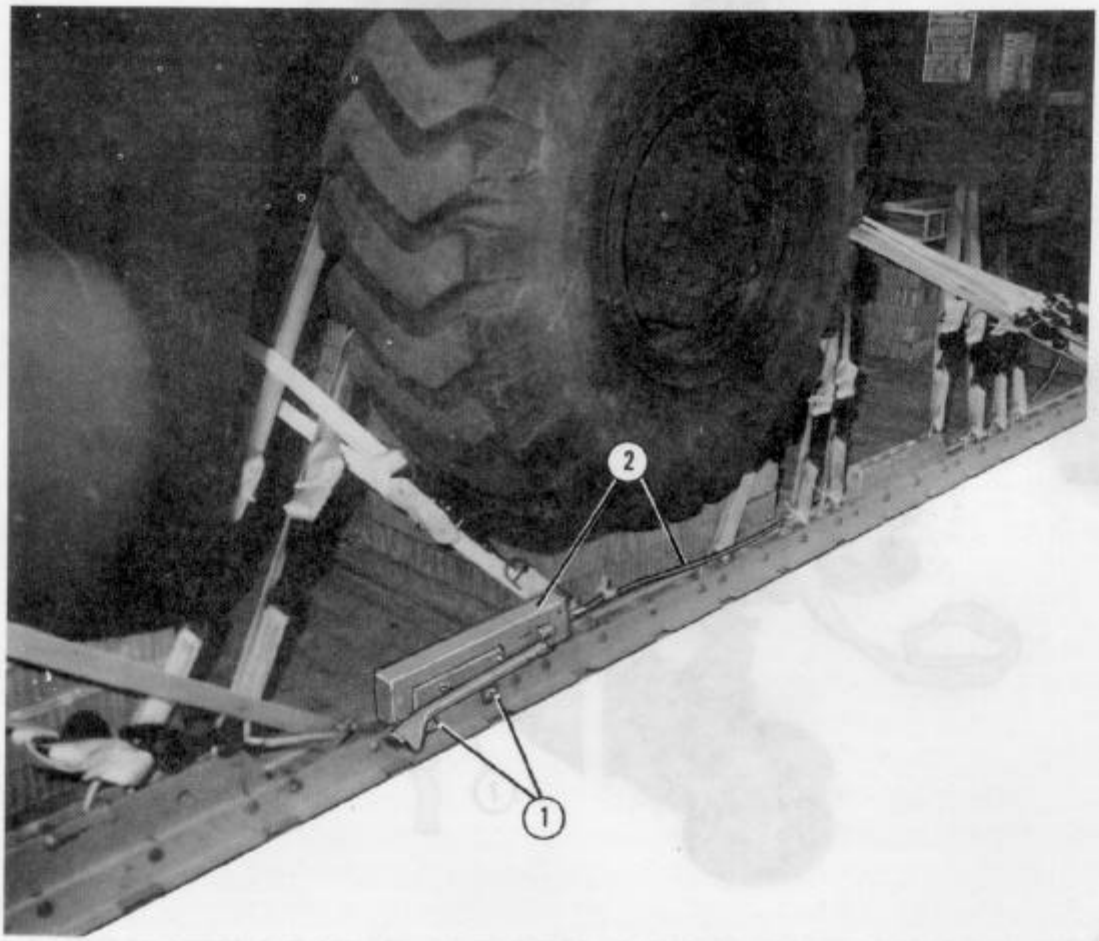

(1) Bolt the actuator bracket to the second set of EFTC bracket holes on the left platform side rail.

(2) Attach a 28-foot release cable to the actuator assembly. Install the actuator assembly to the actuator bracket.

Figure 5-21. Extraction system installed

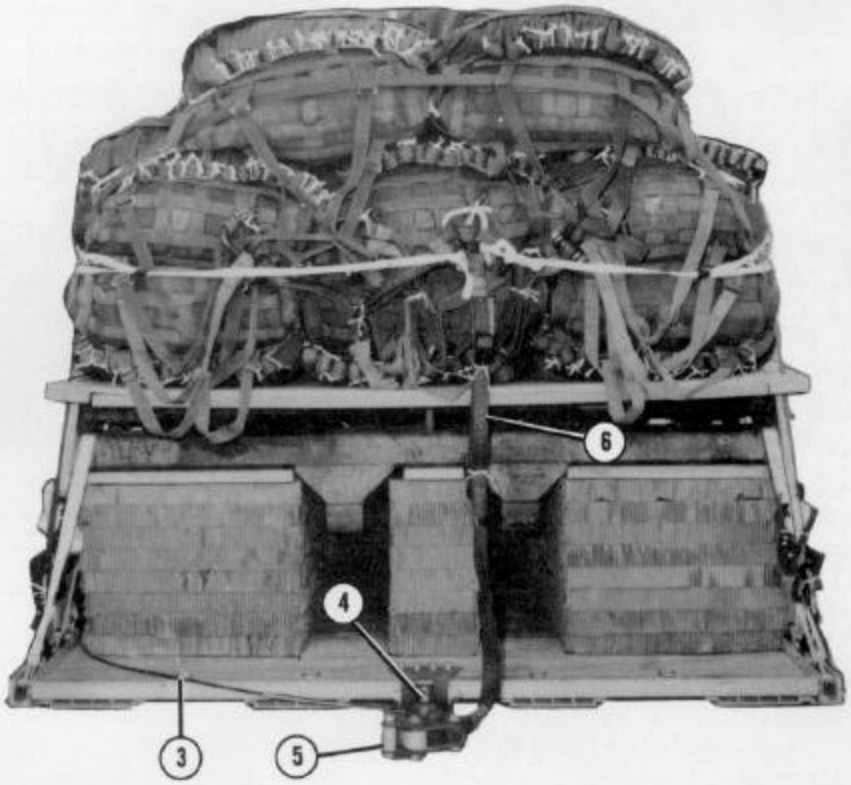

(3) Safety the cable to tiedown ring D-14 with type I, 1/4-inch cotton webbing.

(4) Bolt the latch assembly to the extraction bracket assembly.

(5) Install an adapter link assembly to the link assembly according to FM 10-500-2/ TO 13C7-1-5.

(6) Use a 9-foot (2-loop), type XXVI nylon webbing sling for a deployment line. S-fold and tie the excess line with type I, 1/4-inch cotton webbing.

Figure 5-21. Extraction system installed (continued)

5-17. Placing Extraction Parachute

Select the extraction parachute and extraction line needed using the extraction line requirements table in FM 10-500-2/TO 13C7-1-5. Place the extraction parachute and extraction line on the load for installation in the aircraft.

5-18. Installing Provisions for Emergency Restraints

Select and install provisions for the emergency aft restraints according to the emergency aft restraint requirements table in FM 10-500-2/TO 13C7-1-5.

5-19. Marking Rigged Load

Mark the rigged load according to FM 10-500-2/ TO 13C7-1-5 and as shown in Figure 5-22. Complete Shipper's Declaration for Dangerous Goods form. If the load varies from the one shown, the weight, height, CB, tip off curve, and parachute requirements must be recomputed.

CAUTION
Make the final rigger inspection required by FM 10-500-2/ TO 13C7-1-5 before the load leaves the rigging site.

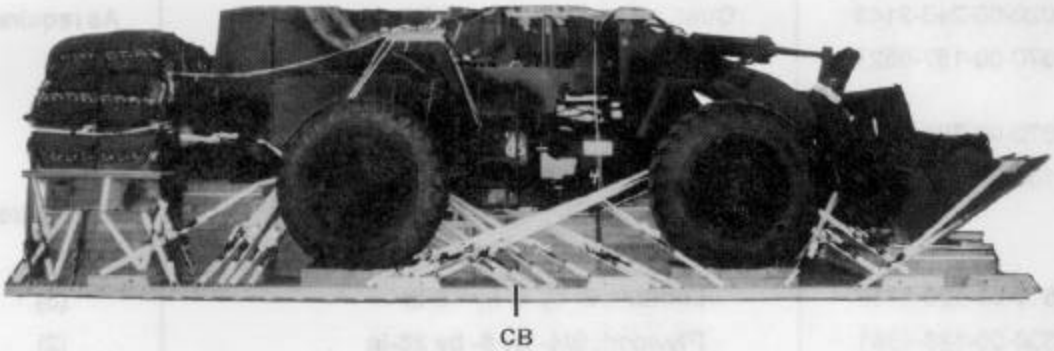

RIGGED LOAD DATA

Weight:	Load shown	39,940 pounds
	Maximum load allowed	40,500 pounds
Height		100 inches
Width		108 inches
Length		347 inches
Overhang:	Front	9 inches
	Rear	0 inches
CB (from front edge of platform)		168 inches
Extraction system (adds 18 inches to length of platform)		EFTC

Figure 5-22. 950B scoop-loader with forklift attachment rigged for low-velocity airdrop

5-20. Equipment Required

Use the equipment listed in Table 5-1 to rig this load.

Table 5-1. Equipment required for rigging the 950B scoop-loader with a five-foot forklift attachment for low-velocity airdrop on a type V platform

National Stock Number	Item	Quantity
1670-00-162-4979	Adapter, link assembly	1
8040-00-273-8713	Adhesive, paste, 1-gal	As required
	Clevis, suspension:	
4030-00-432-2516	Screw-pin	4
4030-00-678-8562	3/4-in (medium)	4
4020-00-240-2146	Cord, nylon, type III, 550-lb	As required
1670-00-157-6527	Coupling, airdrop, extraction force transfer w 28-ft cable	1
1670-00-360-0328	Cover, clevis, large	8
8135-00-664-6958	Cushioning material, packaging, cellulose wadding	As required
	Frame support for honeycomb stack 7:	1
5510-00-220-6146	Lumber, 2- by 4- by 48-in	(6)
5530-00-128-4981	Plywood, 3/4- by 6- by 28-in	(2)
5530-00-128-4981	Plywood, 3/4- by 28- by 48-in	(2)
	Frame support for honeycomb stack 8:	1
5510-00-220-6146	Lumber, 2- by 4- by 27-in	(6)
5530-00-128-4981	Plywood, 3/4- by 27- by 48-in	(2)
	Frame support for honeycomb stack 9:	1
5510-00-220-6146	Lumber, 2- by 4- by 48-in	(3)
5530-00-128-4981	Plywood, 3/4- by 14- by 48-in	(2)
1670-01-183-2678	Leaf, extraction line (line bag)	(2)
	Line, extraction:	
1670-01-064-4454	60-ft (6-loop), type XXVI nylon webbing (C-130 aircraft)	1
670-01-062-6312	120-ft (6-loop), type XXVI nylon webbing (C-141 aircraft)	1
1670-00-006-2752	Link assembly, four-point	1

Table 5-1. Equipment required for rigging the 950B scoop-loader with a five-foot forklift attachment for low-velocity airdrop on a type V platform

National Stock Number	Item	Quantity
5510-00-220-6146	Lumber, 2-by 4-in:	
	12-in	
	14-in	
	28-in	
5510-00-220-6148	Lumber, 2- by 6-in	
	5-in	2
	8-in	2
	96-in	2
5510-00-220-6274	Lumber, 4- by 4- by 26-in	4
	Nail, steel wire, common:	
5315-00-010-4659	8d	As required
5315-00-010-4661	10d	As required
5315-00-010-4663	16d	As required
1670-00-753-3928	Pad, energy-dissipating, honeycomb, 3- by 36- by 96-in:	39 sheets
	12- by 7-in	(2)
	12- by 12-in	(2)
	12- by 13-in	(2)
	12- by 22-in	(2)
	12- by 24-in	(3)
	12- by 39-in	(12)
	12- by 51-in	(6)
	12- by 68-in	(1)
	18- by 28-in	(22)
	24- by 36-in	(8)
	28- by 15-in	(8)
	36- by 60-in	(1)
	48- by 10-in	(1)
	48- by 12-in	(5)
	48- by 14-in	(10)
	48- by 27-in	(7)

Table 5-1. Equipment required for rigging the 950B scoop-loader with a five-foot forklift attachment for low-velocity airdrop on a type V platform

National Stock Number	Item	Quantity
	29- by 36-in	(16)
	12- by 36-in	(8)
	48- by 28-in	(13)
	Parachute, cargo:	
670-01-016-7841	G-11C	8
1670-00-040-8135	28-ft, extraction, heavy-duty	2
	Parachute stowage platform:	
5530-00-128-4981	Plywood, 3/4-in:	
	8- by 36-in	1
	28- by 36-in	4
	48- by 96-in	2
5510-00-220-6148	Lumber, 2- by 6-in:	
	48-in	2
	96-in	2
	Platform, AD, type V, 28-ft:	
	Bracket:	
1670-01-162-2375	Inside EFTA	1
1670-01-162-2374	Outside EFTA	1
1670-01-162-2372	Clevis, load tiedown	54
1670-01-162-2376	Extraction bracket assembly	1
1670-01-247-2389	Suspension link	8
1670-01-162-2381	Tandem link	2
5530-00-128-4981	Plywood, 3/4-in:	
	4- by 31-in	2
	12- by 5-in	2
	12- by 34-in	2
	12- by 36-in	2
	12- by 44-in	2
	18- by 28-in	1
	28- by 15-in	1
	96- by 26-in	1
	96- by 36-in	1

Table 5-1. Equipment required for rigging the 950B scoop-loader with a five-foot forklift attachment for low-velocity airdrop on a type V platform

National Stock Number	Item	Quantity
1670-01-097-8817	Release, cargo parachute, M-2, modified:	1
	Reinforced toggle shaft	(1)
	Hardened sleeve bolts	(4)
	2 3/8-in steel spacers	(4)
	Hardened clevis bolts w sleeves	(2)
	Sling, cargo airdrop:	
	For deployment line:	
1670-01-062-6304	9-ft (2-loop), type XXVI nylon webbing	
	For riser extensions:	
1670-01-062-6311	120-ft (2-loop), type XXVI nylon webbing or	8
1670-00-432-2494	120-ft (3-loop), type X nylon webbing	8
	For suspension:	
1670-01-062-6310	11-ft (4-loop), type XXVI nylon webbing	4
1670-00-040-8219	Strap, parachute release, multicut	2
8305-00-074-5124	Tape, adhesive, 2-in	As required
1670-00-937-0271	Tiedown assembly, 15-ft	56
	Webbing:	
8305-00-268-2411	Cotton, 1/4-in, type I	As required
8305-00-082-5752	Nylon, tubular, 1/2-in, natural	As required
8305-00-261-8584	Nylon, type X, treated, olive drab	As required

CHAPTER 6

RIGGING THE SCOOP-LOADER WITH A SEVEN-FOOT FORKLIFT ATTACHMENT FOR LOW-VELOCITY AIRDROP ON THE TYPE V PLATFORM

CAUTION
This load exceeds the maximum allowable weight for low-velocity airdrop for training from C-141 aircrafts.

6-1. Description of Load

The scoop-loader with a seven-foot forklift attachment is rigged on a 28-foot, type V platform for low-velocity airdrop.

The load requires eight G-11 cargo parachutes. A drawing of the scoop-loader with tiedown provisions is shown in Figure 6-1.

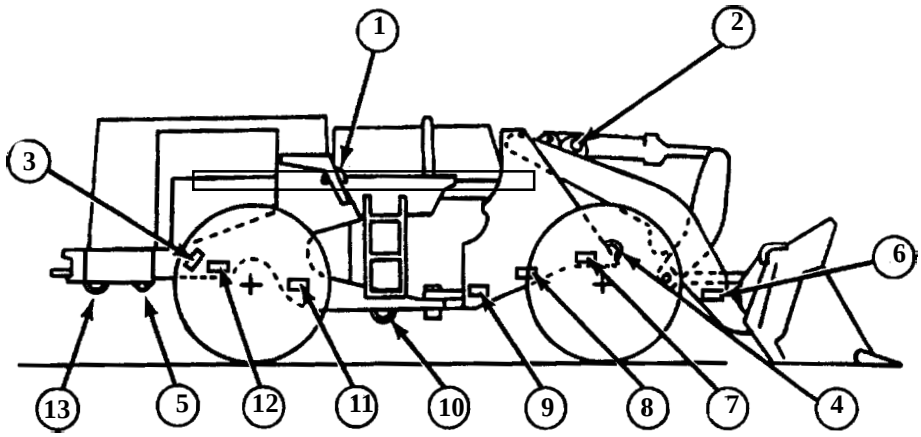

1. Rear suspension point
2. Front suspension point
3. Rear lift eye
4. Front lift eye
5. Air transport trailer hitch
6. Tiedown provision 1
7. Tiedown provision 2
8. Tiedown provision 3
9. Tiedown provision 4
10. Tiedown provision 5
11. Tiedown provision 6
12. Tiedown provision 7
13. Tiedown provision 8

Figure 6-1. Scoop-loader with tiedown provisions

6-2. Preparing Platform

Prepare a 28-foot, type V airdrop platform as shown in Figure 6-2.

NOTE: The nose bumper may or may not be installed.

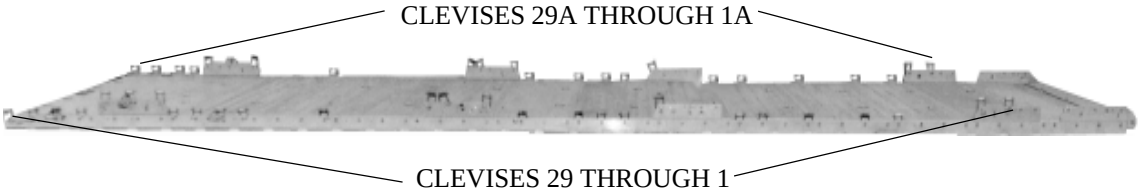

Step:

1. Inspect, or assemble and inspect, the platform as outlined in TM 10-1670-268-20&P/TO 13C7-52-22.
2. Install suspension links to each side rail using bushing holes 6, 7, and 8; 22, 23 and 24; 33, 34 and 35; 49, 50, and 51.
3. Install a tandem link on the front of each platform side rail using bushing holes 1, 2, and 3.
4. Install clevises on bushings 3 and 4 on the first set of suspension links.
5. Install a clevis on bushing 4 on the second set of suspension links.
6. Install clevises on bushings 1, 3 and 4 on the third set of suspension links.
7. Install clevises on bushings *2 and 4 of the fourth set of suspension links.
8. Starting at the front of the platform, install clevises on each platform side rail using the bushings bolted on holes 12, 14, 17, 19, 20, 26, 27, 28, 31, 41, 45, *46, 47, 48, 53, *54, 55 and 56.
9. Starting at the front of the platform, number the clevises bolted to the right side rail from 1 through 29 and those bolted to the left side rail from 1A through 29A.
10. Starting at the front of the platform, label the panel tiedown rings A and B from right to left. Label the rear panel tiedown rings A, B, C, and D from right to left.

* Denotes a double clevis. Install double clevises according to FM 10-500-2/TO 13C7-1-5.

Figure 6-2. Platform prepared

6-3. Preparing and Positioning Honeycomb Stacks

Prepare the honeycomb stacks for the scoop-loader according to paragraph 4-3 and as shown in Figures 4-3 through 4-14.

Prepare honeycomb stacks 1, 14, 15, and 16 as shown in Figures 6-3 through 6-5. Position the honeycomb stacks on the platform as shown in Figures 6-6 and 6-7.

NOTE: Nail lumber before building honeycomb stacks.

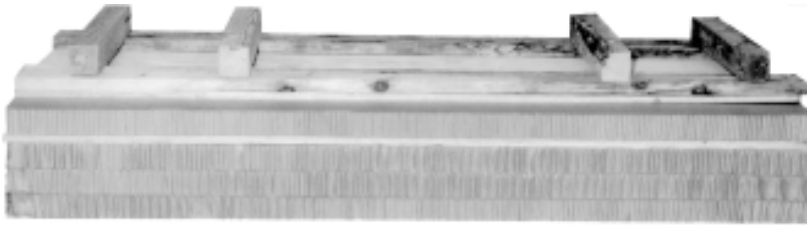

Stack Number	Pieces	Width (Inches)	Length (Inches)	Material	Instructions
1	3	96	36	Honeycomb	Glue and form base.
	1	96	36	3/4-inch Plywood	Glue plywood on top of base.
	1	96	36	Honeycomb	Glue on top of plywood.
	1	96	26	3/4-inch Plywood	Glue on top of honeycomb center.
	2	96	2x6	Lumber	Nail one piece flush with the front edge of the plywood. Nail the other flush with the rear edge using eight-penny nails.
	4	96	4x4	Lumber	Temporarily position the 4x4 pieces of lumber on top of the 2x6 pieces of lumber.

Figure 6-3. Honeycomb stack 1 prepared

Stack Number	Pieces	Width (Inches)	Length (Inches)	Material	Instructions
14	3	12	41	Honeycomb	Glue and form base.
	1	12	41	3/4-inch Plywood	Glue to base.
	2	12	41	Honeycomb	Glue to plywood.
	1	8	41	3/4-inch Plywood	Center and glue on base.
	1	2x6	41	Lumber	Center on plywood and nail in place.

Figure 6-4. Honeycomb stack 14 prepared

Stack Number	Pieces	Width (Inches)	Length (Inches)	Material	Instructions
15 and 16	3	28	41	Honeycomb	Glue and form base.
	1	28	41	3/4-inch Plywood	Glue to base.
	2	28	41	Honeycomb	Glue to plywood.
	1	28	41	3/4-inch Plywood	Glue to base.
	2	2x6	41	Lumber	Nail one piece on the front edge of plywood. Nail the other piece on the rear edge of plywood.
	2	2x6	12	Lumber	Center and nail one piece on the right edge and center. Nail the other piece to the left edge.

Figure 6-5. Honeycomb stacks 15 and 16 prepared

NOTES: 1. Measurements from the front of the platform are taken from the front edge of the first panel or the crease of the nose bumper, NOT from the front edge of the nose bumper.
2. Measurements from the rear of the platform are taken from the rear edge of the last panel.

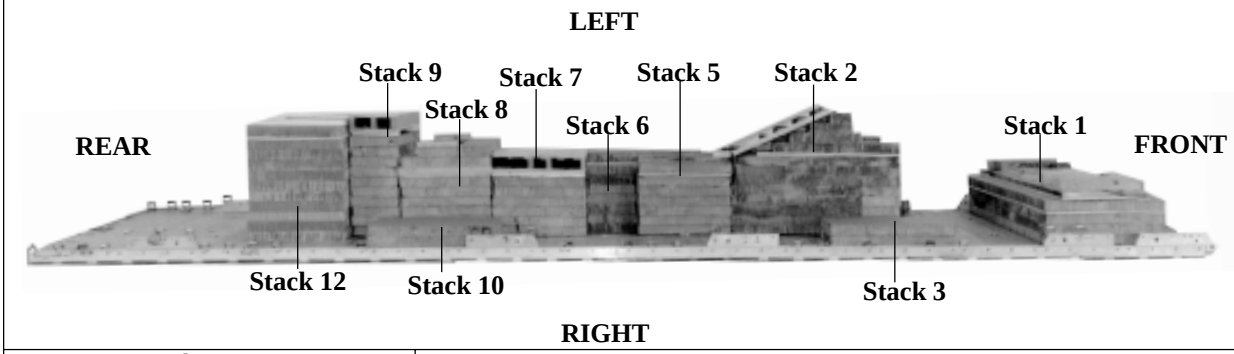

Stack Number	Instructions
	Place stack:
1	Centered 12 inches from the front edge of the platform.
2	Centered 36 inches from stack 1.
3	28 inches from stack 1, flush against right side of stack 2.
4	28 inches from stack 1, flush against left side of stack 2.
5	Centered flush against stack 2.
6	Centered flush against stack 5.
7	Centered flush against stack 6.
8	Centered flush against stack 7.
9	Centered flush against stack 8.
10	86 inches from stack 3, flush against right side of stack 8.
11	86 inches from stack 4, flush against left side of stack 8.
12	17 1/2 inches from right rail, flush against stack 9.
13	17 1/2 inches from left rail, flush against stack 9.

Figure 6-6. Honeycomb stacks positioned on platform

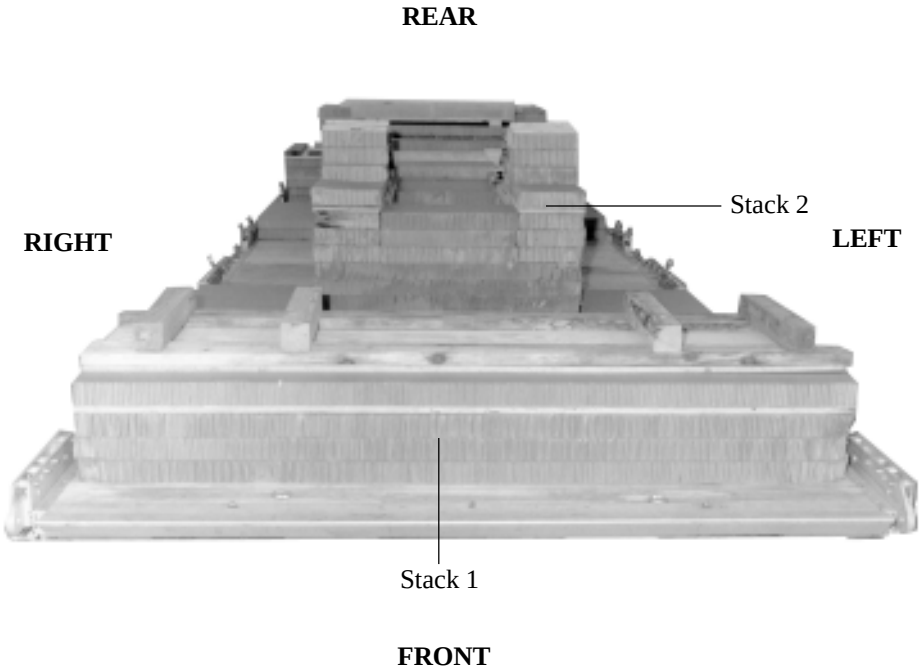

Figure 6-7. Front view of honeycomb stacks positioned on platform

6-4. Preparing Scoop-Loader

Prepare the scoop-loader according to paragraph 4-4 and as shown in Figures 4-18 through 4-22. Prepare the rear axle using two 15-foot lashings as shown in Figure 6-8.

(1) Use two 15-foot lashings to keep wheels level.

(2) Connect one lashing to each side of the rear axle. Secure both lashings on top of the engine compartment with D-rings and a load binder.

Note: These lashings were installed for positioning purposes only. After scoop-loader has been positioned, remove the two 15-foot lashings.

Figure 6-8. Rear wheel axle prepared

6-5. Installing Lifting Slings

Install two 11-foot (4-loop), type XXVI nylon webbing slings and two 12-foot (4-loop), type XXVI nylon webbing slings for lifting slings. Bolt the sling to the scoop-loader as shown in Figure 6-9.

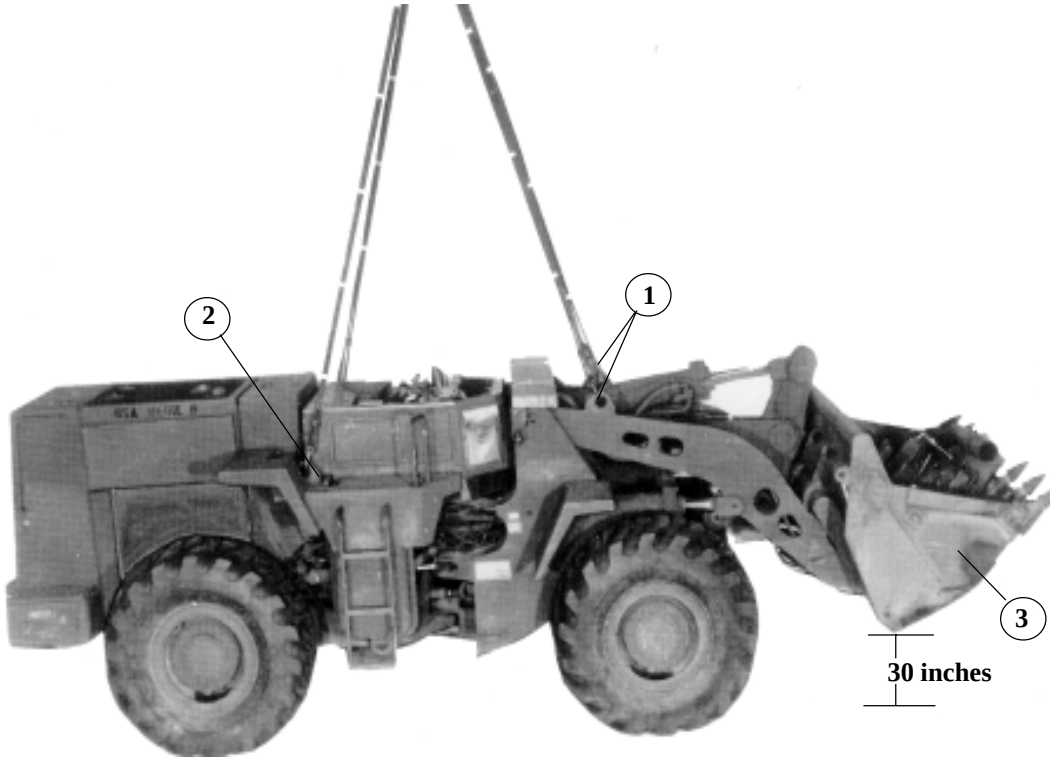

1 Bolt the 11-foot (4-loop), type XXVI nylon webbing slings to the front lifting points with two screw-pin clevises.

2 Bolt the 12-foot (4-loop), type XXVI nylon webbing slings to the rear lifting points with two screw-pin clevises.

3 Raise the bucket 30 inches above the ground, and tilt it completely to the rear.

Figure 6-9. Lifting slings installed

6-6. Positioning Scoop-Loader

Position the scoop-loader on the platform stacks as shown in Figure 6-10.

CAUTION
The bucket must be centered between the platform side rails with a 9-inch overhang to the front.

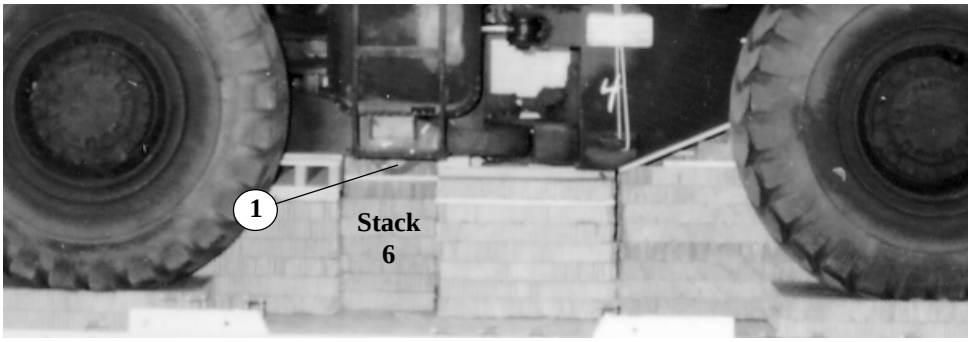

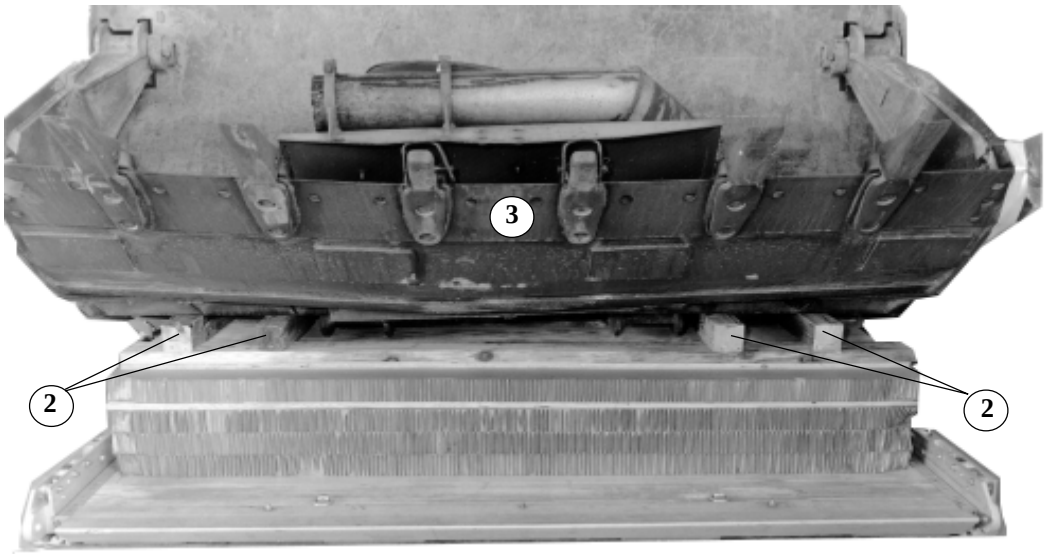

(1) Center the fifth tiedown provision on stack 6.

(2) Position and adjust four pieces of 4- by 4- by 26-inch lumber on stack 1 as shown above.

(3) Lower the bucket onto stack 1. Make sure the bucket is moved to the full rear position.

(4) Remove the lifting slings from the scoop-loader (not shown).

Note: Toenail the 4- by 4- by 26-inch pieces of lumber after the bucket is lowered.

Figure 6-10. Scoop-loader positioned

6-7. Preparing Scoop-Loader After Positioning

After the scoop-loader has been positioned on the platform, prepare it according to paragraph 4-7 and as shown in Figure 4-25.

6-8. Preparing and Positioning Honeycomb Stacks for Lifting Forks

Prepare and position honeycomb stacks for lifting forks as shown in Figure 6-11.

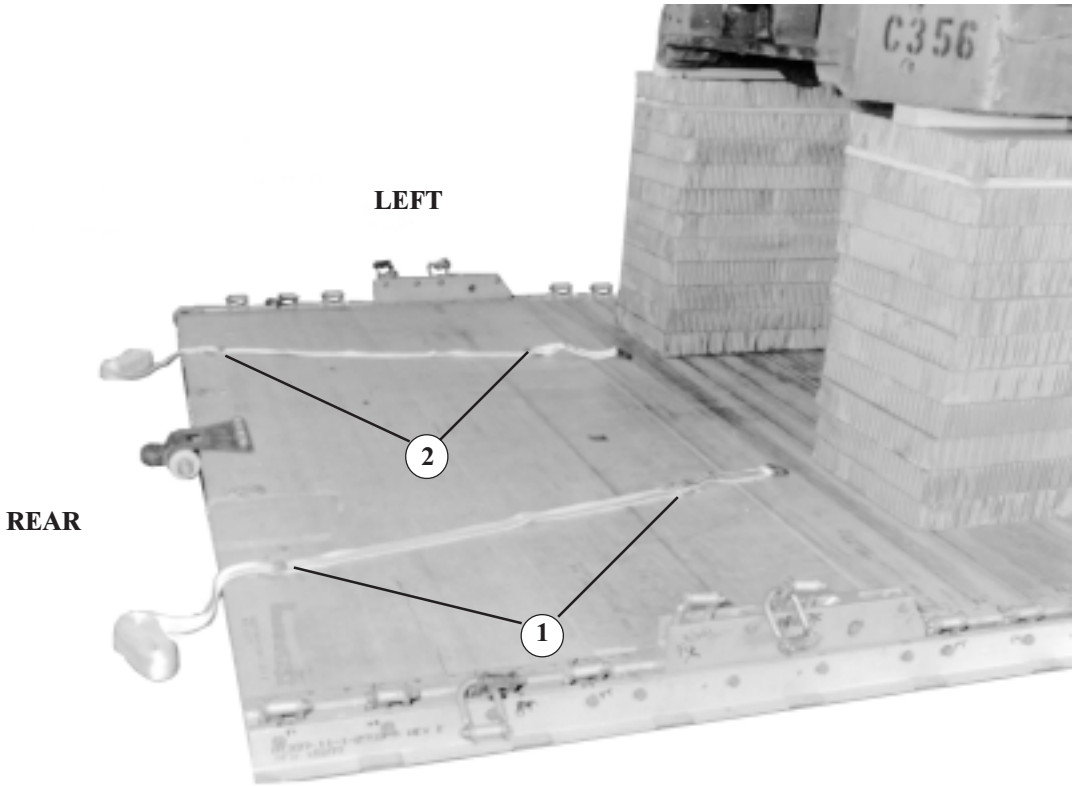

(1) Preposition a 15-foot lashing through deck rings 13A and 14A.

(2) Preposition a 15-foot lashing through deck rings 13D and 14D.

Figure 6-11. Honeycomb stacks for lifting fork positioned

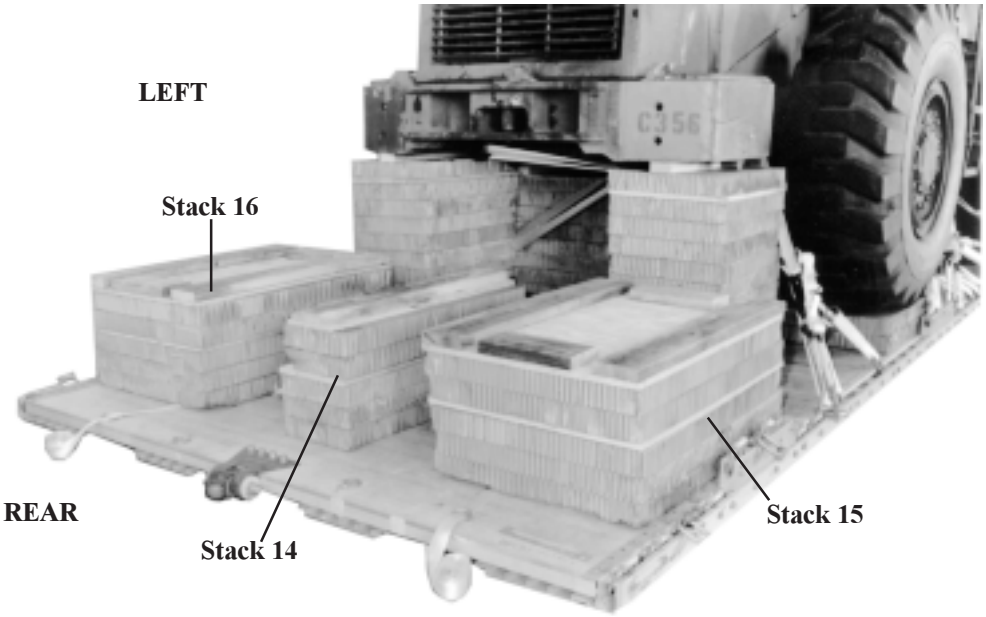

(3) Position stack 15, 1 1/2 inches from the inside of the right rail and 12 inches from the rear of the platform.

(4) Position stack 16, 1 1/2 inches from the inside of the left rail and 12 inches from the rear of the platform.

(5) Position stack 14 centered between stacks 15 and 16 and 12 inches from the rear of the platform.

Figure 6-11. Honeycomb stacks for lifting forks positioned (continued)

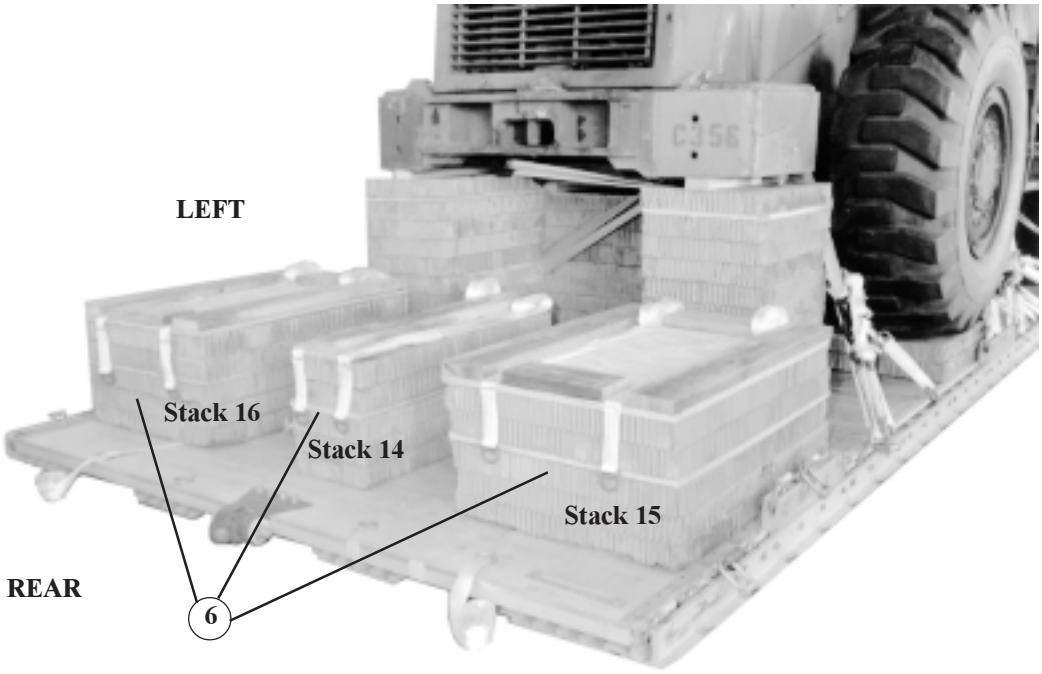

(6) Preposition six 15-foot lashings on stacks 14, 15 and 16 as shown above.

Figure 6-11. Honeycomb stacks for lifting forks positioned (continued)

6-9. Positioning Lifting Fork Frame

Position the lifting fork frame on the honeycomb stacks as shown in Figure 6-12.

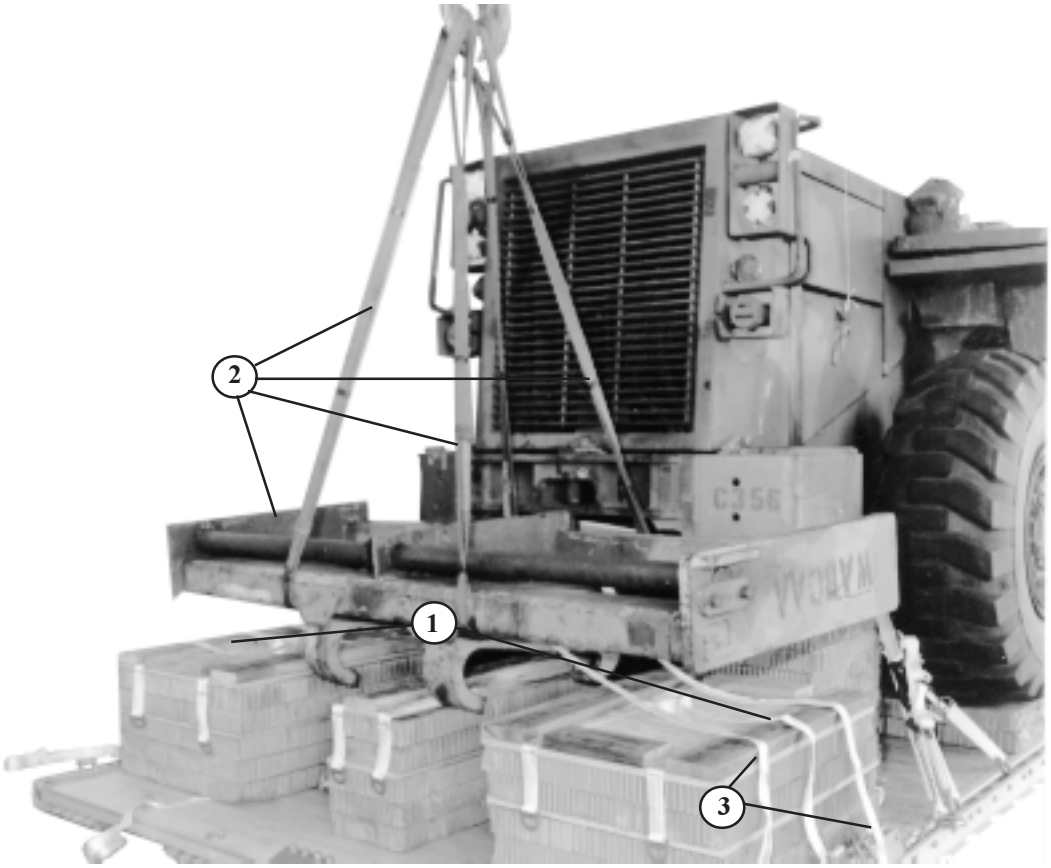

1. Preposition two 15-foot lashings on honeycomb stacks 15 and 16. The running ends will pass under the right and left sides of the forklift frame.

2. Preposition two 30-foot lashings by evenly spacing the lashings under the outside frames over the D-rings setting on stack 14. Have the running ends going over the top of the left and right center supports and under the outside edges of the frame.

3. Position the inside of the fork frame over stacks 14, 15, and 16 using two lifting slings.

Figure 6-12. Fork frame positioned

6-10. Lashing Lifting Fork Frame

Lash the lifting fork frame as shown in Figure 6-13.

(1) Ensure the two 30-foot lashings are routed under the outside frames and over the permanent steel beam and under the movable metal support.

Figure 6-13. Lifting fork frame lashed

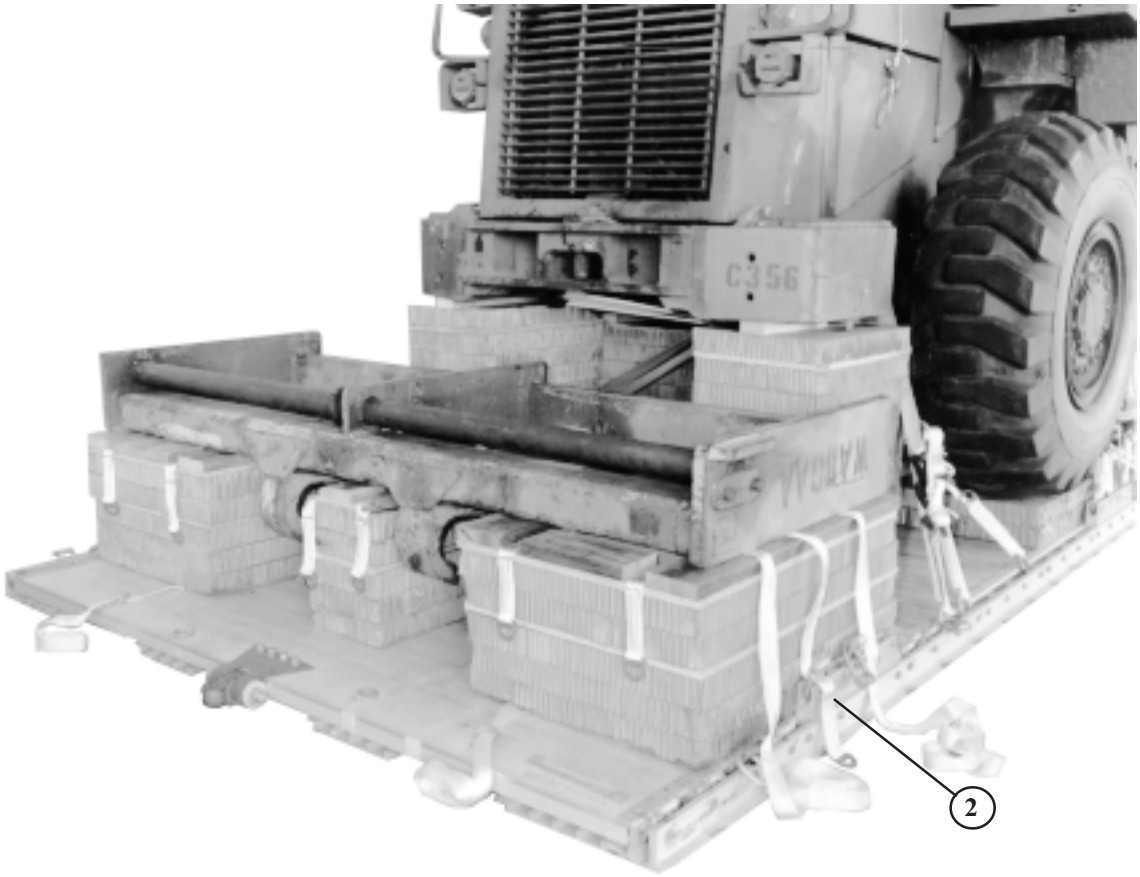

(2) Preposition a 15-foot lashing through clevis 24. The running end will pass under the right side of the forklift frame and lay on top of stack 15.

(3) Preposition a 15-foot lashing through clevis 24A. The running end will pass under the left side of the forklift frame and lay on top of stack 16 (not shown).

Figure 6-13. Lifting fork frame lashed (continued)

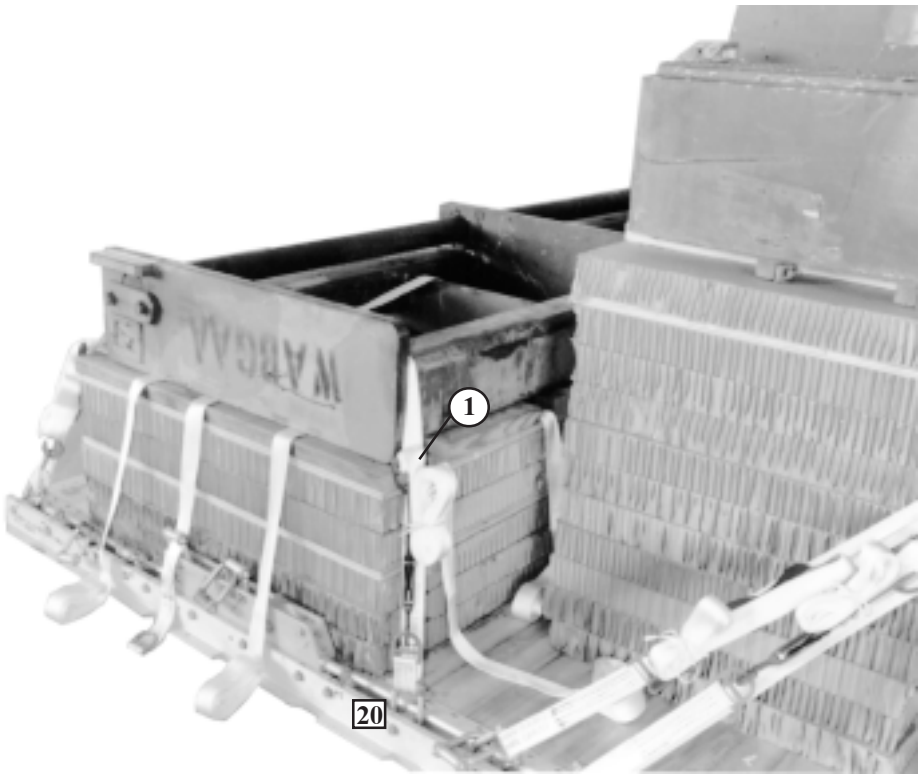

Lashing Number	Tiedown Clevis Number	Instructions
		Pass lashing around:
1	20	Fork frame, front right side.
2	20A	Fork frame, front left side.
3	29	Fork frame, rear right side.
4	29A	Fork frame, rear left side.

Figure 6-13. Lifting fork frame lashed (continued)

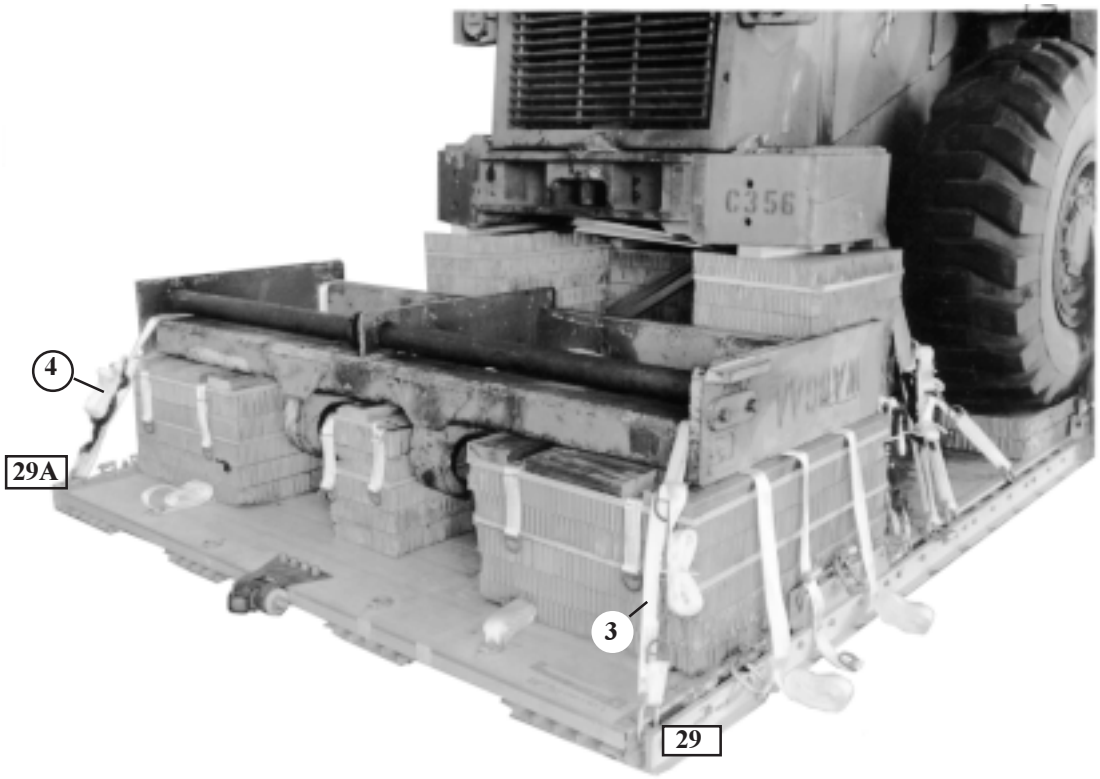

Figure 6-13. Lifting fork frame lashed (continued)

1. Build a fork support board as shown in diagram and position it on top of the frame.
2. Run the prepositioned 15-foot lashings up through the right and left holes in the support board.

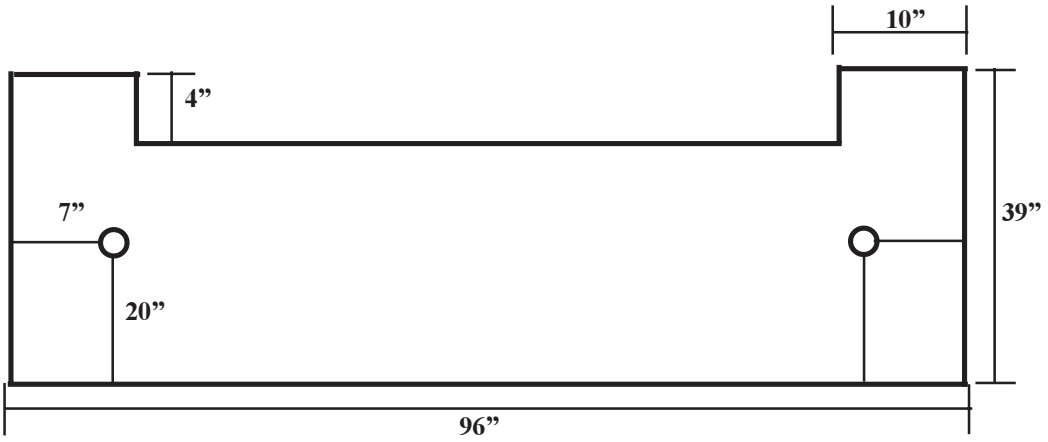

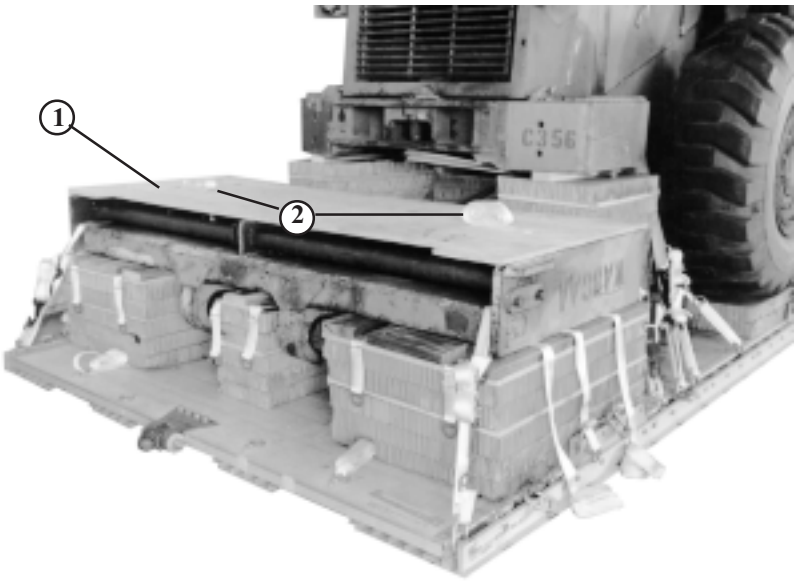

Figure 6-13. Lifting fork frame lashed (continued)

6-11. Hoisting Lifting Forks

Hoist lifting forks using three 15-foot lashings as shown in Figure 6-14.

1. Lift forks using three 15-foot lashings on all three points of each lifting fork.
2. Wrap each lashing one turn through the eye of the fork, the heel of the fork and center of the fork.

Note: Leave lashings on for recovery purposes.

Figure 6-14. Lifting forks hoisted

6-12. Positioning Lifting Forks

Position lifting forks on support board as shown in Figure 6-15.

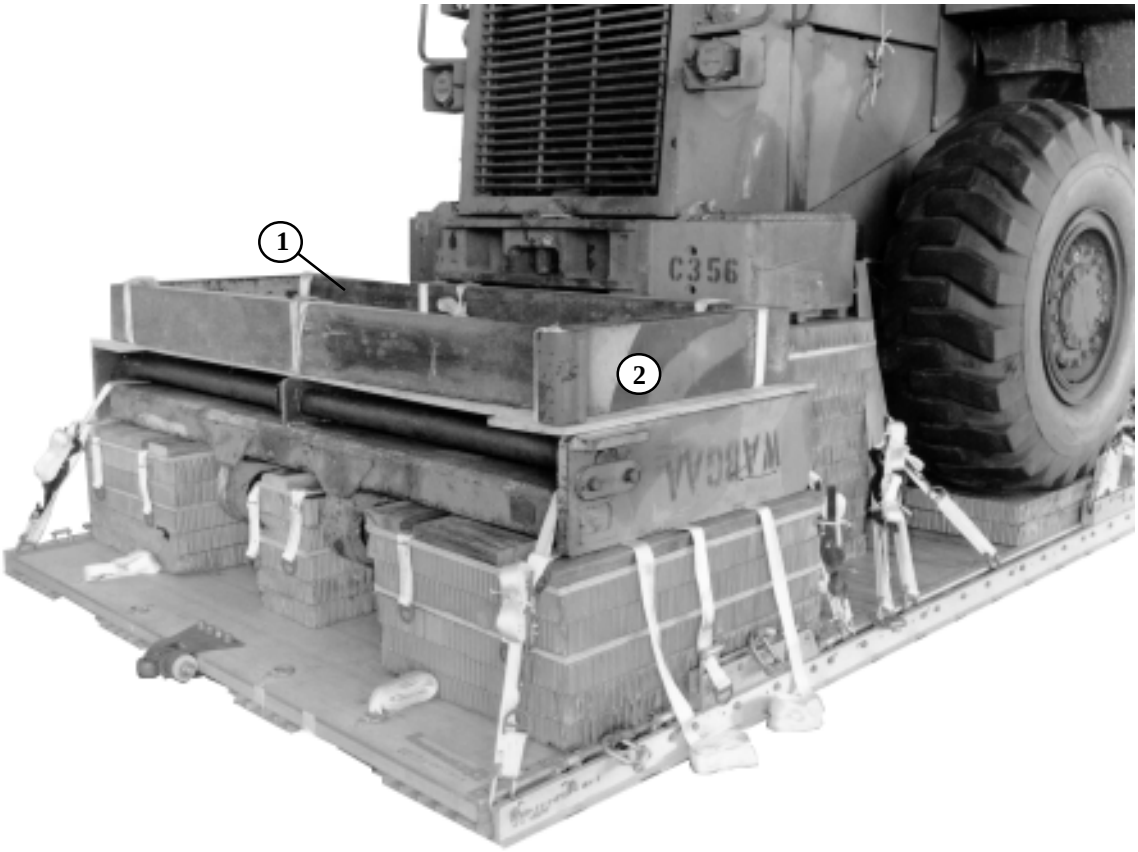

1. Position one fork on its side with the long side to the front of the load and the short side to the right of the load on the support board.

2. Position the other fork on its side with the long side to the rear of the load and the short side to the left of the load on the support board.

Figure 6-15. Lifting forks positioned

6-13. Securing Lifting Forks

Secure lifting forks as shown in Figure 6-16.

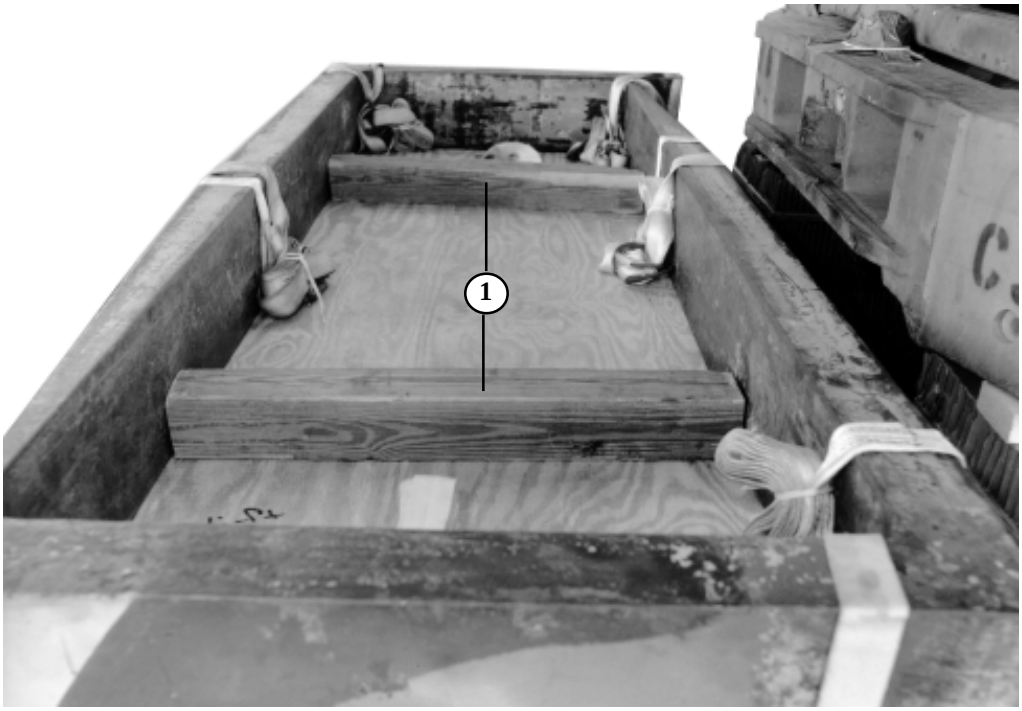

(1) Place two 28-inch 4x4 pieces of lumber between the two forks to space them apart.

Figure 6-16. Lifting forks secured

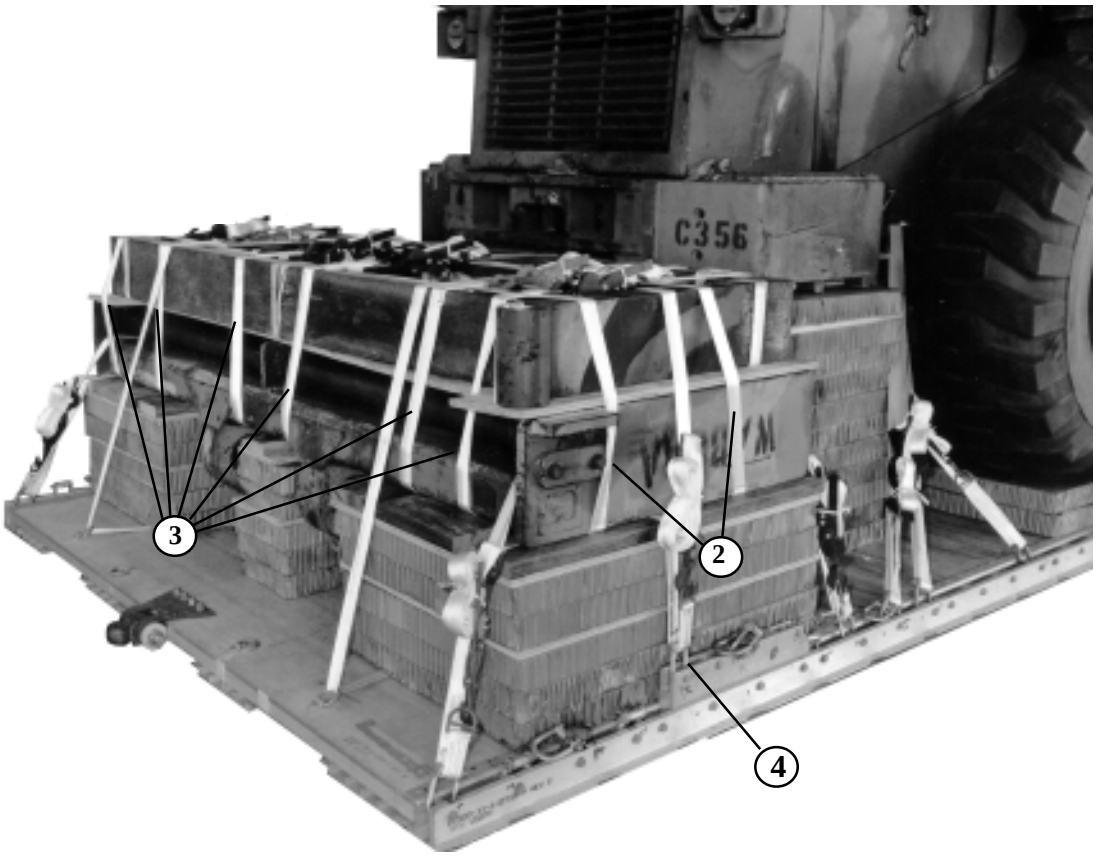

(2) Secure the two 30-foot prepositioned lashings located under the fork frame on top of the forks.

(3) Secure the six prepositioned 15-foot lashings located on top of stacks 14, 15, and 16 on top of the forks.

(4) Take the running end of the lashing that runs through clevis 24 over the right side of the fork and secure it to the side load.

(5) Take the running end of the lashing through clevis 24A over the left side of the fork and secure it to the side of the load (not shown).

Figure 6-16. Lifting forks secured (continued)

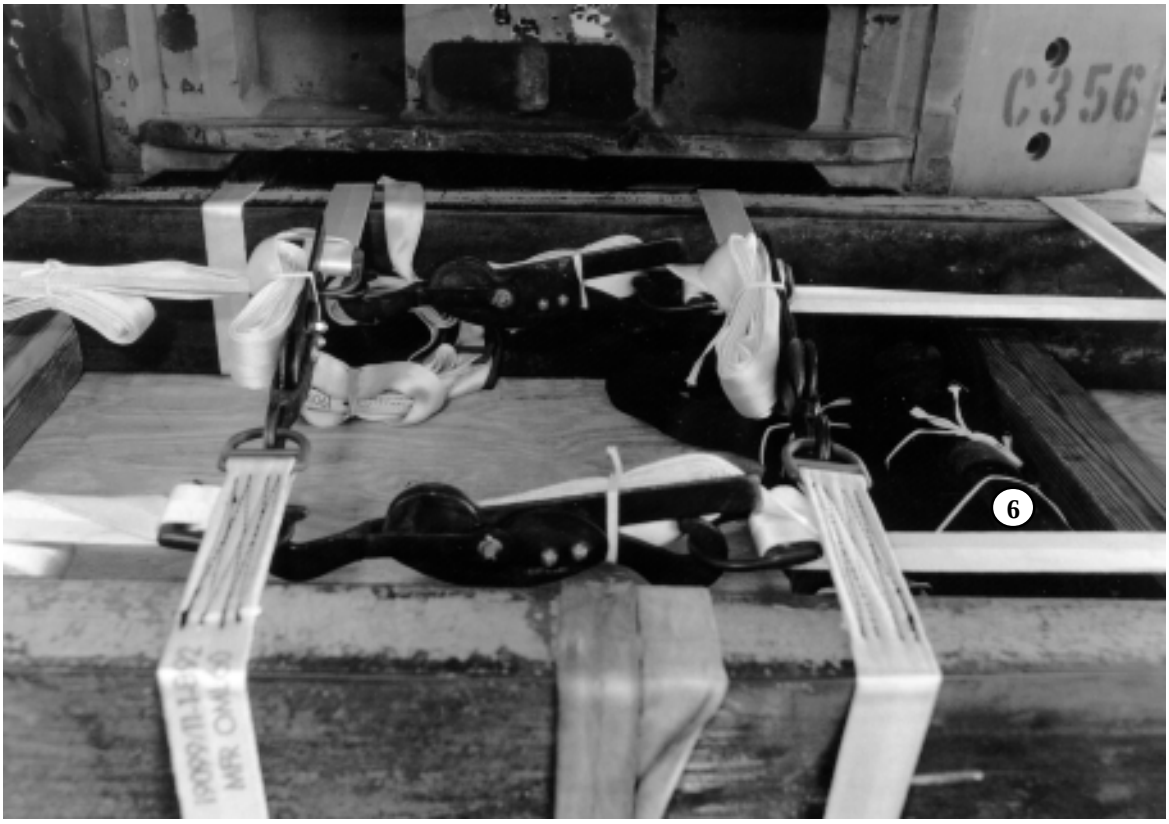

6 Place two 12-foot (2-loop) lifting slings inside the space between the forks to be used in the load recovery.

Figure 6-16. Lifting forks secured (continued)

6-14. Lashing Scoop-Loader to the Platform

Lash the scoop-loader to the platform as shown in Figure 6-17.

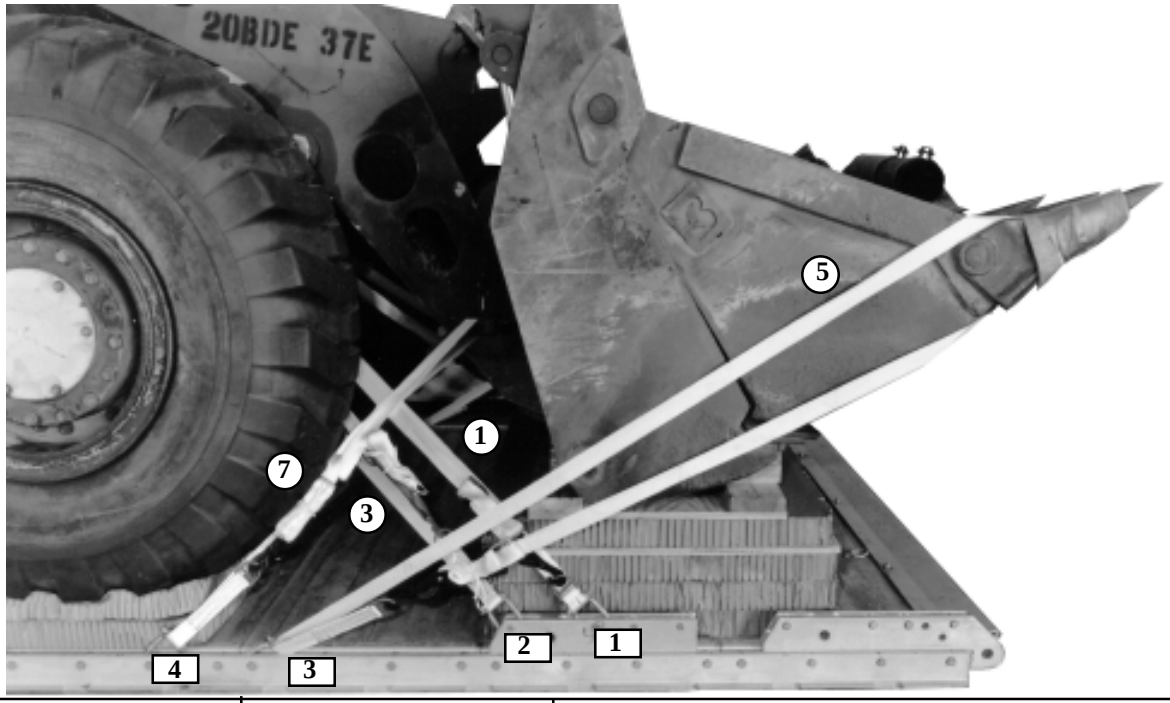

Lashing Number	Tiedown Clevis Number	Instructions
		Pass lashing through:
1	1	Front lifting point, right side.
2	1A	Front lifting point, left side.
3	2	Tiedown point 2, right side.
4	2A	Tiedown point 2, left side.
5	3	Around the corner of the bucket, right side .
6	3A	Around the corner of the bucket, left side.
7	4	Tiedown point 1, right side.
8	4A	Tiedown point 1, left side.

Figure 6-17. Lashings 1 through 8 installed

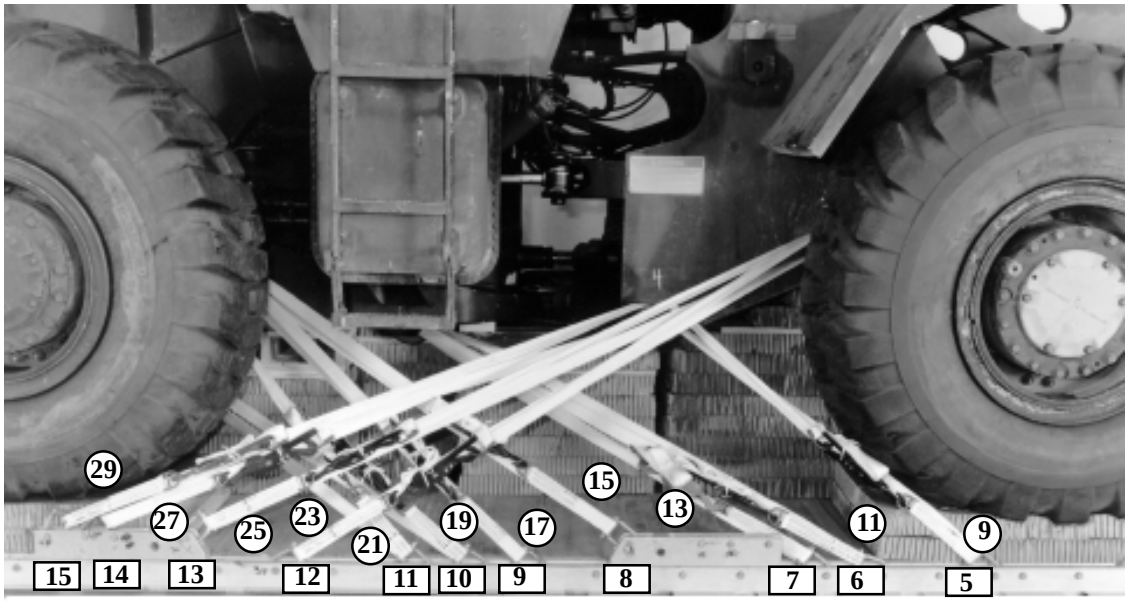

Lashing Number	Tiedown Clevis Number	Instructions
		Pass lashing through:
9	5	Tiedown point 4, right side
10	5A	Tiedown point 4, left side.
11	6	Tiedown point 5, right side.
12	6A	Tiedown point 5, left side.
13	7	Tiedown point 5, right side.
14	7A	Tiedown point 5, left side.
15	8	Tiedown point 5, right side.
16	8A	Tiedown point 5, left side.

Figure 6-17. Lashings 9 through 16 installed (continued)

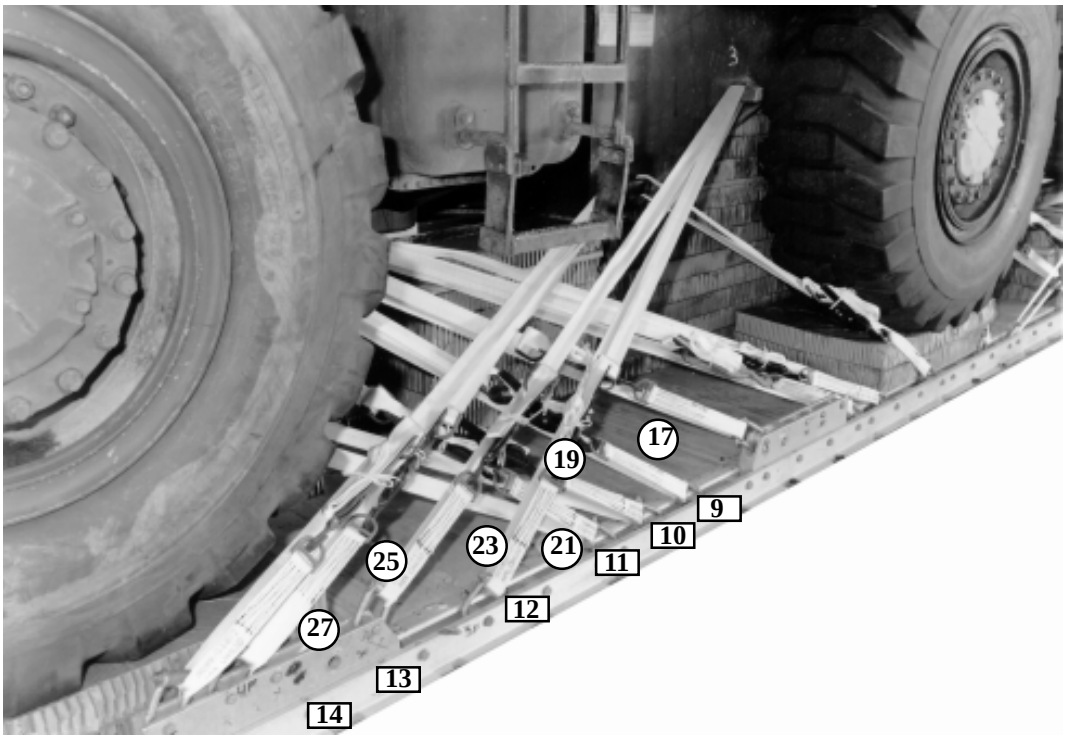

Lashing Number	Tiedown Clevis Number	Instructions
		Pass lashing through:
17	9	Tiedown point 6, right side.
18	9A	Tiedown point 6, left side.
19	10	Tiedown point 7, right side.
20	10A	Tiedown point 7, left side.
21	11	Tiedown point 7, right side.
22	11A	Tiedown point 7, left side.
23	12	Tiedown point 3, right side.
24	12A	Tiedown point 3, left side.
25	13	Tiedown point 3, right side.
26	13A	Tiedown point 3, left side.
27	14	Tiedown point 4, right side.
28	14A	Tiedown point 4, left side.

Figure 6-17. Lashings 17 through 28 installed (continued)

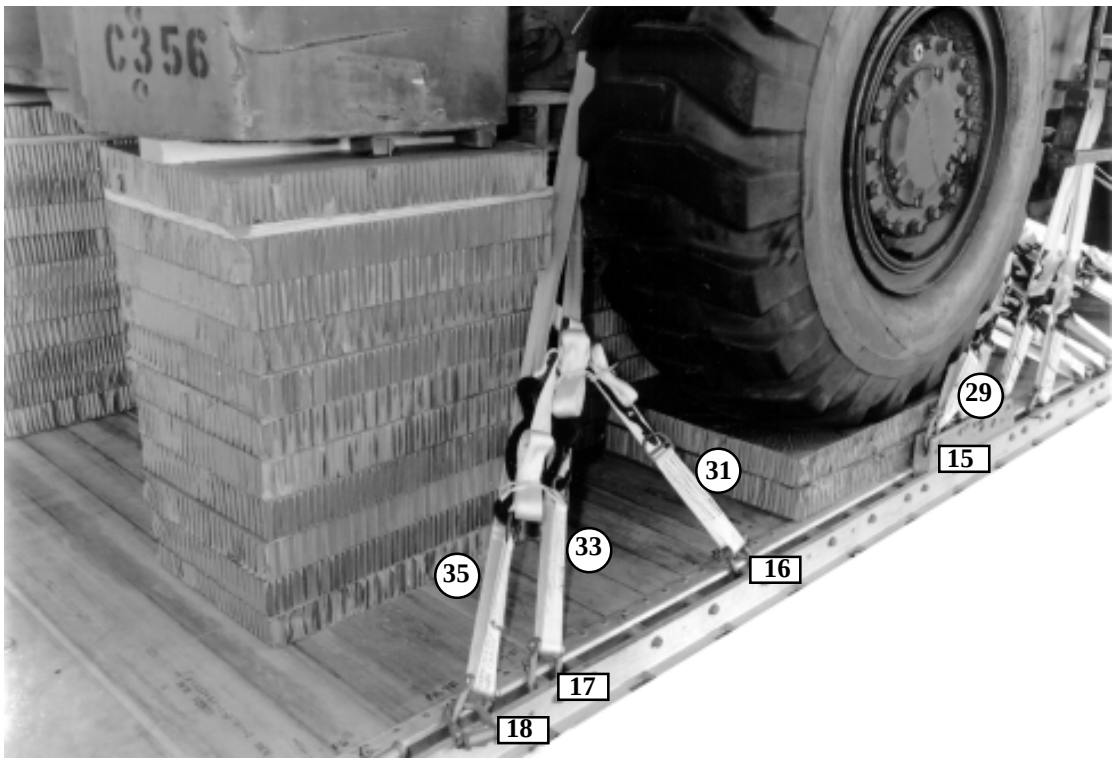

Lashing Number	Tiedown Clevis Number	Instructions
		Pass lashing through:
29	15	Tiedown point 4, right side.
30	15A	Tiedown point 4, left side.
31	16	Tiedown point 8, left side.
32	16A	Tiedown point 8, right side.
33	17	Tiedown point 7, right side.
34	17A	Tiedown point 7, left side.
35	18	Tiedown point 7, right side.
36	18A	Tiedown point 7, left side.

Figure 6-17. Lashings 29 through 36 installed (continued)

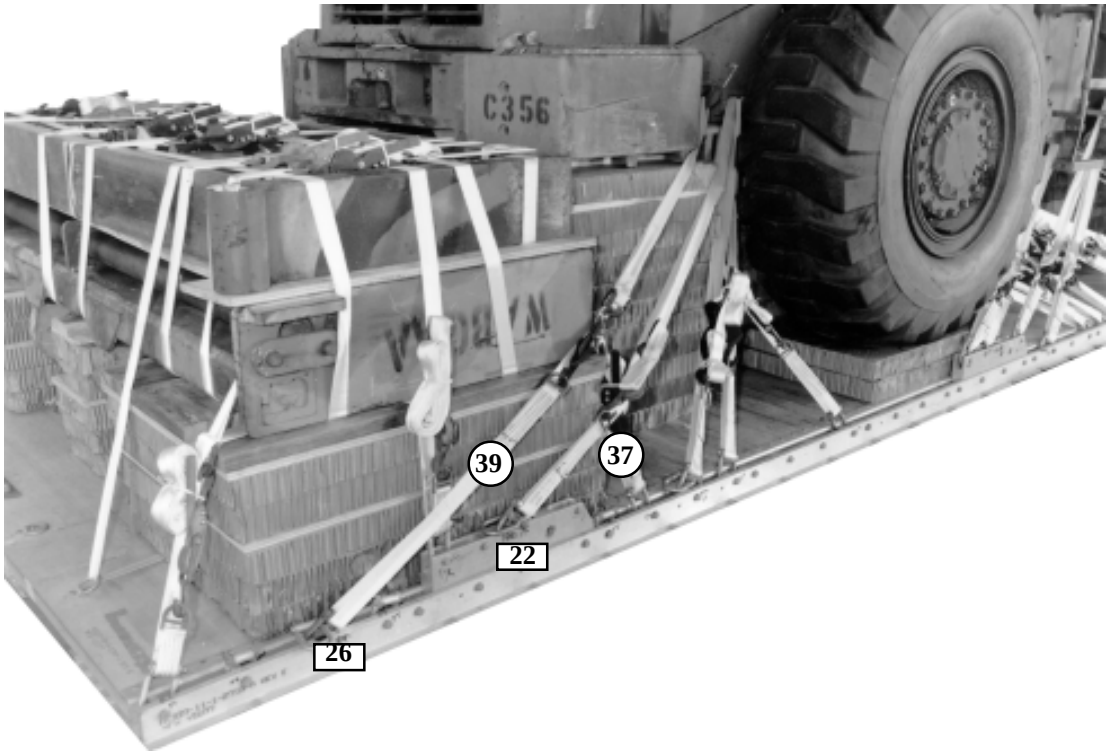

Lashing Number	Clevis Number	Instructions
		Pass lashing through:
37	22	Tiedown point 7, right side.
38	22A	Tiedown point 7, left side.
39	26	Tiedown point 7, right side.
40	26A	Tiedown point 7, left side.

Figure 6-17. Lashings 37 through 40 installed (continued)

6-15. Building the Parachute Stowage Platform

Build the parachute stowage platform as shown in Figure 6-18.

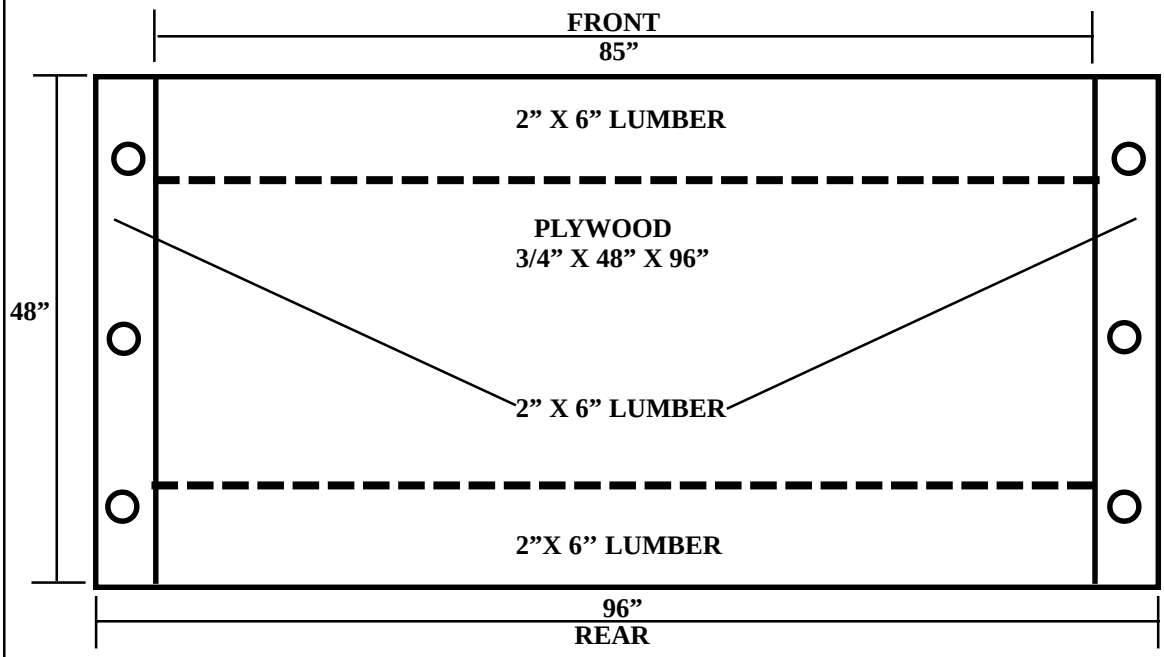

Step:

1 Use a 3/4- by 48- by 96-inch piece of plywood.

2 Nail a 2- by 6- by 48-inch piece of lumber along each side of the plywood using eight-penny nails.

3 Nail a 2- by 6- by 85-inch piece of lumber along the front and rear of the plywood using eight-penny nails.

4 Drill six 2-inch holes as shown.

Figure 6-18. Parachute stowage platform built

6-16. Installing the Parachute Stowage Platform

Install the parachute stowage platform as shown in Figure 6-19.

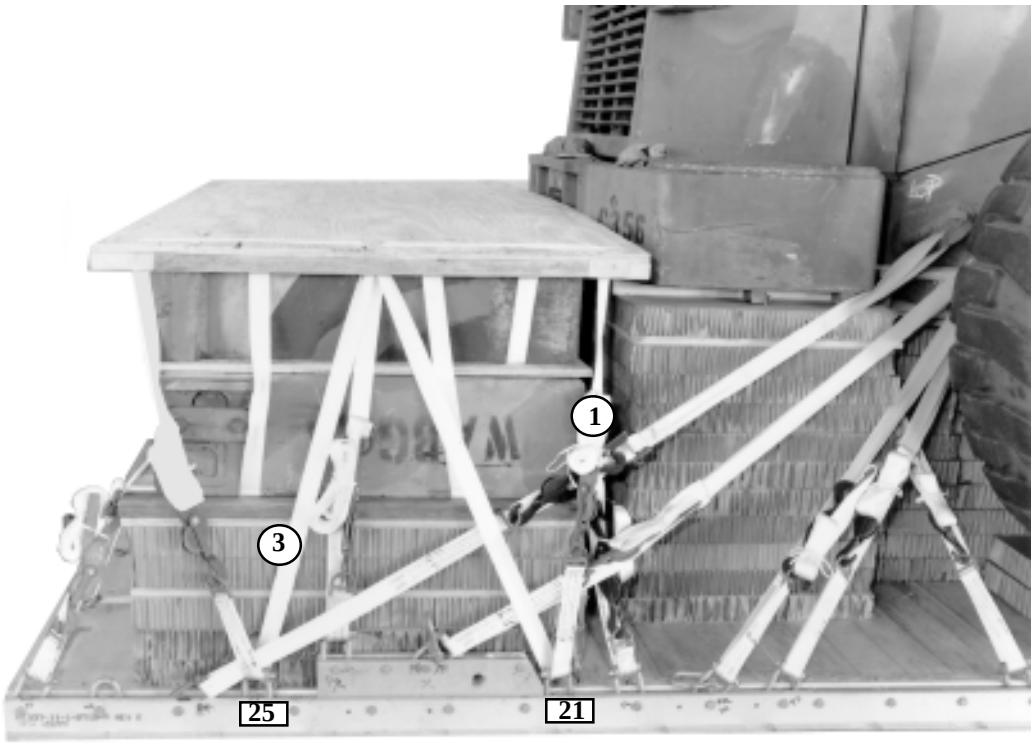

Lashing Number	Tiedown Clevis Number	Instructions
		Pass lashing through:
1	21	Center and forward hole in platform, right side.
2	21A	Center and forward hole in platform, left side.
3	25	Center and aft hole in platform, right side.
4	25A	Center and aft hole in platform, left side.

Figure 6-19. Parachure stowage platform installed

6-17. Stowing Cargo Parachutes

Stow eight G-11 cargo parachutes on the load according to FM 10-500-2/ TO 13C7-1-5 and as shown in Figure 6-20.

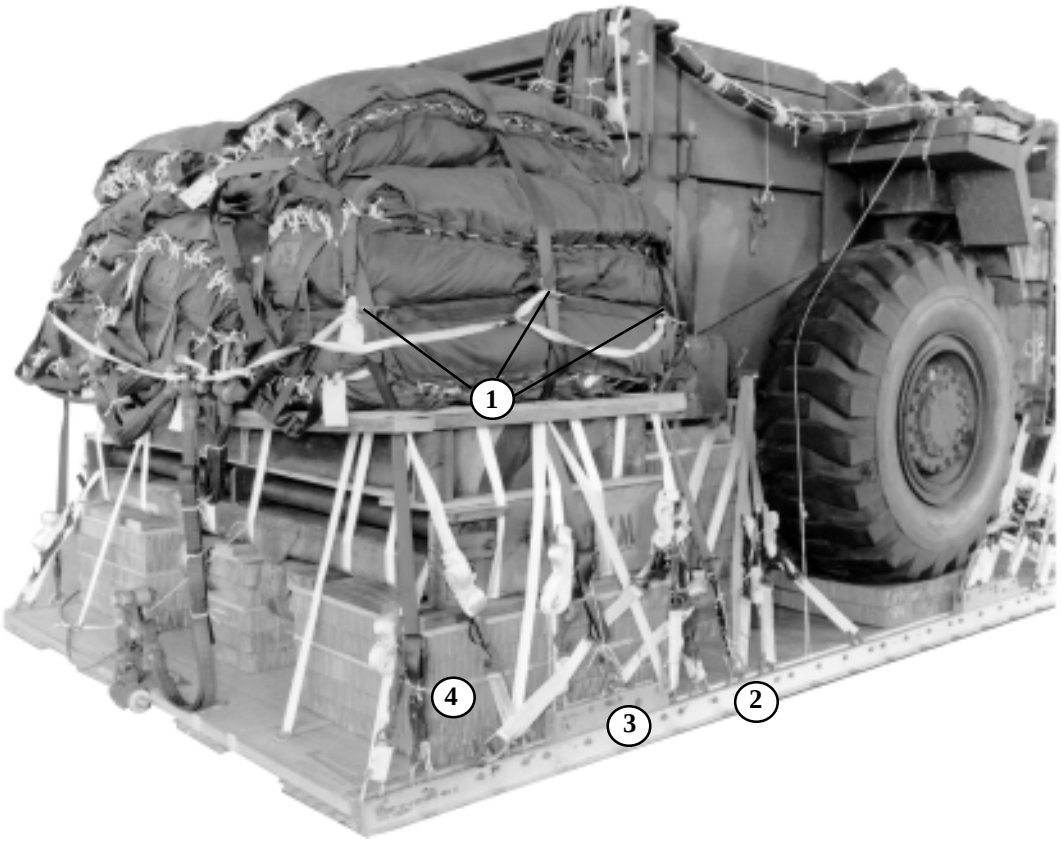

1. Secure the G-11 cargo parachutes with three lengths of type X nylon webbing.
2. Run one length of type X nylon webbing from clevis 19, through the front carrying handles, and over to clevis 19A.
3. Run one length of type X nylon webbing from clevis 23, through the center carrying handles, and over to clevis 23A.
4. Run one length of type X nylon webbing from clevis 28, through the rear carrying handles, and over to clevis 28A.
5. Attach parachute release knives as outlined in FM 10-500-2/TO 13C7-1-5.

Figure 6-20. Cargo parachutes stowed

6-18. Installing M-2 Parachute Release Assembly

Install the M-2 parachute release assembly (modified for 42,000 pound capacity) according to FM 10-500-2/TO 13C7-1-5 and as shown in Figure 6-21.

CAUTION
Make sure the modified M-2 parachute release includes these strengthened items: one reinforced toggle shaft, four hardened sleeve bolts, four 2 3/8-inch steel spacers, and two hardened clevis bolts with sleeves.

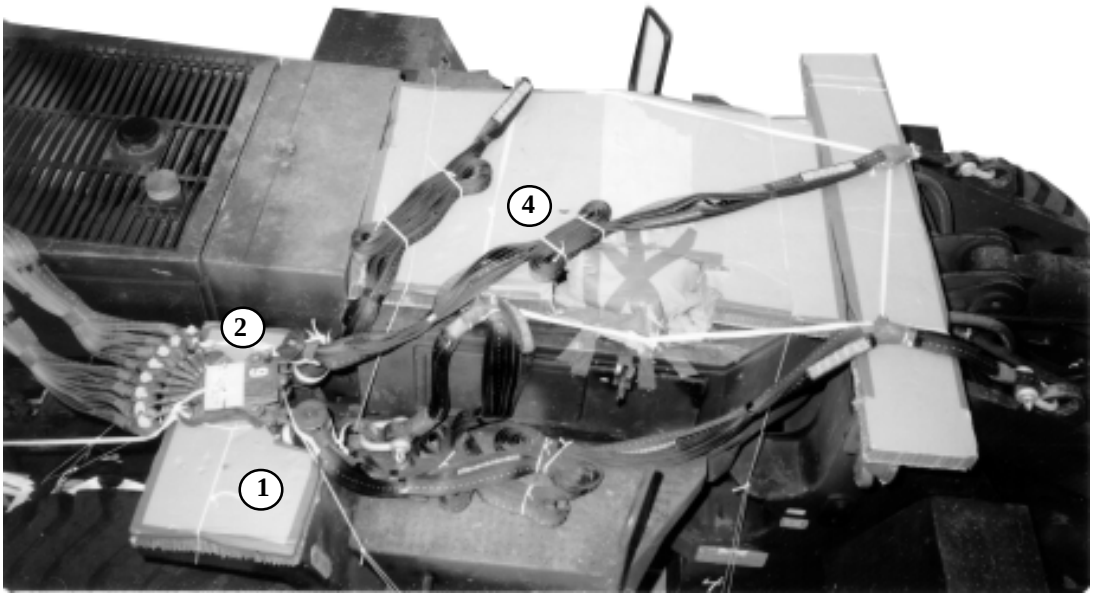

1. Tie a piece of honeycomb on the right rear fender.
2. Place the modified M-2 parachute release assembly on the honeycomb.
3. Safety the riser extension between the rear handle and over the right rear taillight assembly with type I, 1/4-inch cotton webbing (not shown).
4. Route the suspension slings to the right side of the scoop-loader. Safety the suspension sling keepers according to FM 10-500-2/TO 13C7-1-5.

NOTE: Some riser extension stows may have to be cut to allow the riser extension to reach the release.

Figure 6-21. M-2 release assembly installed

6-19. Installing Extraction System

Install the extraction system according to FM 10-500-2/TO 13C7-1-5 and as shown in Figure 6-22.

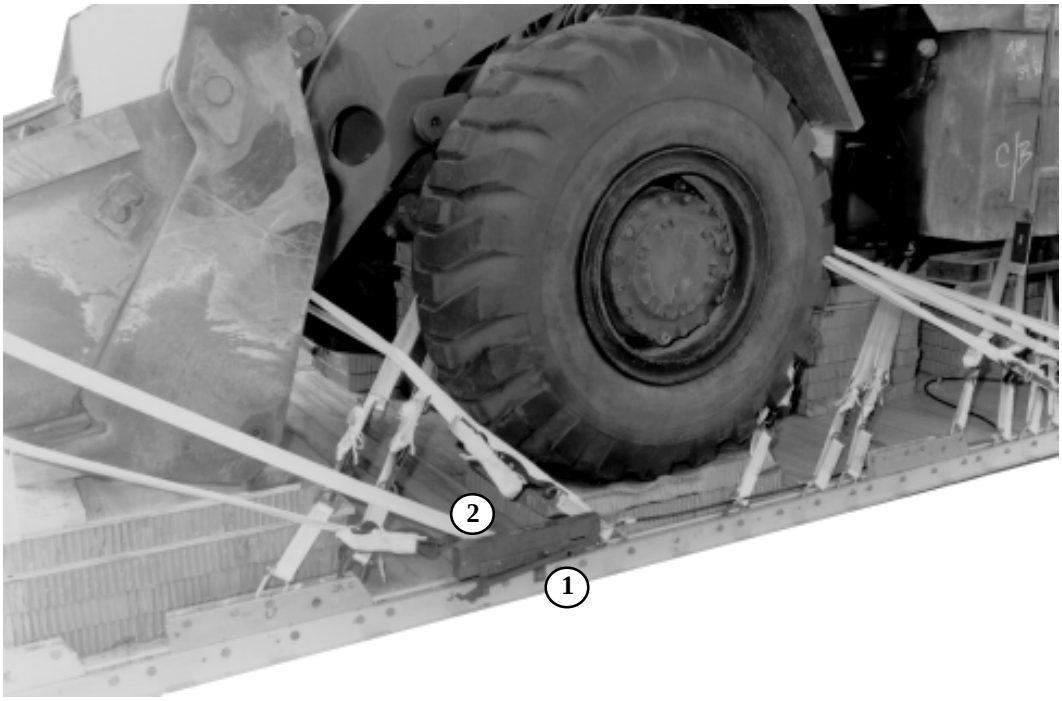

1. Bolt the actuator bracket to the second set of EFTC bracket holes on the left platform side rail.
2. Attach a 28-foot release cable to the actuator assembly. Install the actuator assembly to the actuator bracket.

Figure 6-22. Extraction system installed

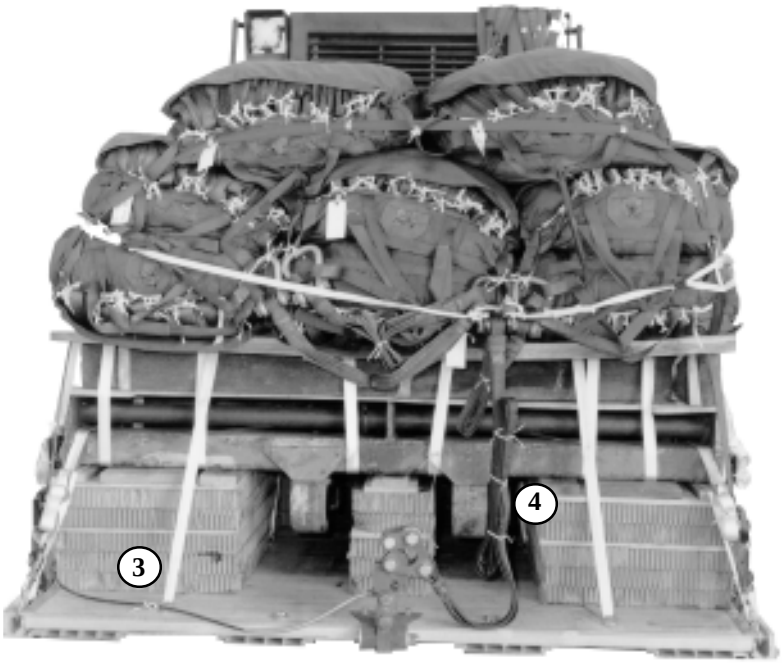

(3) Safety cable to tiedown ring 14B with type I, 1/4-inch cotton webbing.

(4) Use a 9-foot (2-loop), type XXVI nylon webbing sling for a deployment line. S-fold and tie the excess line with type I, 1/4-inch cotton webbing.

Figure 6-22. Extraction system installed (continued)

6-20. Installing Provisions for Emergency Retraints

Select and install provisions for the emergency aft restraints according to the emergency aft restraints requirements table in FM10-500-2/TO 13C7-1-5.

6-21. Placing Extraction Parachute

Select the extraction parachute and extraction line needed using the extraction line requirements table in FM 10-500-2/TO 13C7-1-5. Place the line on the load for installation in the aircraft.

6-22. Marking Rigged Load

Mark rigged load according to FM 10-500-2/ TO 13C7-1-5 and as shown in Figure 6-21.

Complete Shipper's Declaration for Dangerous Goods form. If the load varies from the one shown, the weight, height, CB tip off curve, and parachute requirement must be recomputed.

CAUTION
Make the final rigger inspection required by FM 10-500-2/TO 13C7-1-5 before the load leaves the rigging site.

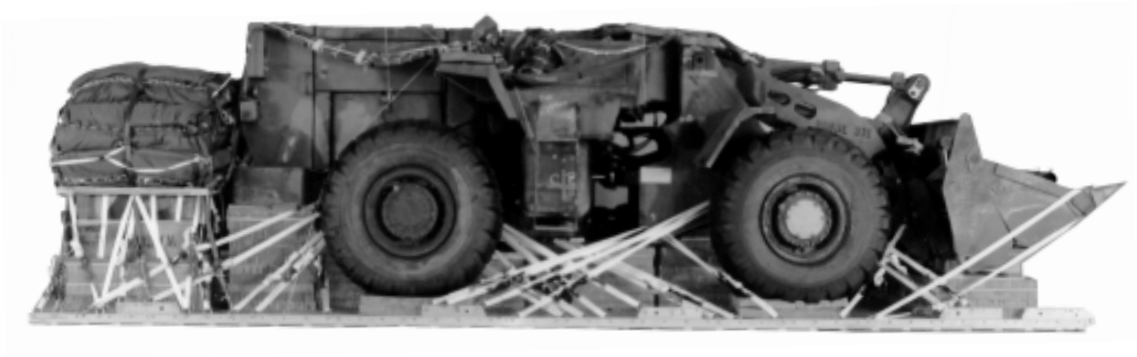

RIGGED LOAD DATA

WEIGHT: LOAD SHOWN.....39,860 pounds

MAXIMUM WEIGHT ALLOWED.....41,060 pounds

HEIGHT.....100 inches

WIDTH.....108 inches

LENGTH.....349 inches

OVERHANG: FRONT..... 13 to 17 inches

CENTER OF BALANCE.....from the front edge of the platform: 166 inches

Figure 6-21. 950B Scoop-loader rigged for low-velocity airdrop

6-23. Equipment Required

Use the equipment listed in Table 6-1 to rig the 950B scoop-loader.

Table 6-1. Equipment required for rigging the 950B scoop-loader with a seven-foot forklift attachment for low-velocity airdrop on a type V platform.

National Stock Number	Item	Quantity
1670-00-162-4979	Adapter , link assembly	1
8040-00-273-8713	Adhesive, paste, 1-gal	As required
	Clevis, suspension:	
4030-00-432-2516	Screw-pin	4
4030-00-678-8562	3/4-in (med)	4
4020-00-240-2146	Cord, nylon, type III, 550-lb	As required
1670-01-326-7309	Coupling, airdrop, extraction force	
1670-00-157-6527	transfer w 28-ft cable	1
1670-00-360-0328	Cover, clevis, large	8
8135-00-664-6958	Cushioning material, packaging, cellulose wadding	As required
	Frame support for honeycomb stack 7:	1
5510-00-220-6146	Lumber, 2- by 4- by 48-in	6
5530-00-128-4981	Plywood, 3/4- by 6- by 28-in	2
	Plywood, 3/4- by 28- by 48-in	2
	Frame support for honeycomb stack 8:	1
5510-00-220-6146	Lumber, 2- by 4- by 27-in	6
	Plywood, 3/4- by 27- by 48-in	2
	Frame support for honeycomb stack 9:	1
5510-00-220-6146	Lumber, 2- by 4- by 48-in	3
5530-00-128-4981	Plywood, 3/4- by 14- by 48-in	2
1670-01-183-2678	Leaf, extraction line (line bag)	2
	Line, extraction:	
1670-01-064-4454	60- ft (6-loop), type XXVI nylon webbing (C-130 aircraft)	1
1670-01-062-6312	120- ft (6-loop), type XXVI nylon webbing (C-141 aircraft)	1
1670-00-006-2752	Link assembly, four point	1

Table 6-1. Equipment required for rigging the 950B scoop-loader with a seven-foot forklift attachment for low-velocity airdrop on a type V platform (continued).

National Stock Number	Item	Quantity
5510-00-220-6146	Lumber, 2-by 4-in:	
	12-in	4
	14-in	2
	28-in	4
5510-00-220-6148	Lumber, 2- by 6-in:	
	5-in	2
	8-in	2
	96-in	2
5510-00-220-6274	Lumber, 4- by 4- by 26-in	4
	Nail, steel wire, common:	
5315-00-010-4659	8d	As required
5315-00-010-4661	10d	As required
5315-00-010-4663	16d	As required
1670-00-753-3928	Pad, energy-dissipating, honeycomb, 3-by 36- by 96-in:	39 sheets
	12- by 7-in	2
	12- by 12-in	2
	12- by 13-in	2
	12- by 22-in	2
	12- by 24-in	3
	12- by 39-in	12
	12- by 51-in	6
	12- by 68-in	1
	18- by 28-in	22
	24- by 36-in	8
	28- by 15-in	8
	36- by 60-in	1
	48- by 10-in	1
	48- by 12-in	5
	48- by 14-in	10
	48- by 27-in	7
	48- by 28-in	13
	96- by 36-in	4
	12- by 41-in	4
	28- by 41-in	5

Table 6-1. Equipment required for rigging the 950B scoop-loader with a seven-foot forklift attachment for low-velocity airdrop on a type V platform (continued).

National Stock Number	Item	Quanity
	Parachute, cargo:	
1670-01-016-7841	G-11 C	8
1670-00-040-8135	28-ft, extraction, heavy duty	2
	Parachute stowage platform:	
5530-00-128-4981	Plywood, 3/4-in:	
	48- by 96-in	1
5510-00-220-6148	Lumber, 2- by 6-in:	
	2- by 48-in	2
	2- by 85-in	2
	Platform, AD, type V, 28-ft:	
	Bracket:	
1670-01-162-2375	Inside EFTA	1
1670-01-162-2374	Outside EFTA	1
1670-01-162-2372	Clevis, load tiedown	56
1670-01-162-2376	Extraction bracket assembly	1
1670-01-247-2389	Suspension link	8
1670-01-162-2381	Tandem link	2
5530-00-128-4981	Plywood, 3/4-in:	
	4- by 31-in	2
	12- by 5-in	2
	12- by 34-in	2
	12- by 36-in	2
	12- by 44-in	2
	18- by 28-in	1
	28- by 15-in	1
	96- by 26-in	1
	96- by 36-in	1

Table 6-1. Equipment required for rigging the 950B scoop-loader with a seven-foot forklift attachment for low-velocity airdrop on a type V platform (continued).

National Stock Number	Item	Quantity
1670-01-097-8816	Release, cargo parachute, M-2, modified:	1
	Reinforced toggle shaft	1
	Hardedned sleeve bolts	4
	2 3/8-in steel spacers	4
	Hardened clevis bolts w sleeves	2
	Sling, cargo airdrop:	
	For deployment line:	
1670-01-062-6304	9-ft (2-loop), type XXVI nylon webbing	1
	For riser extensions:	
1670-01-062-6311	120-ft (2-loop), type XXVI nylon webbing	8
	For suspension:	
1670-01-062-6310	11-ft (4-loop), type XXVI nylon webbing	4
1670-00-040-8319	Strap, parachute release, multicut	2
8305-00-074-5124	Tape, adhesive, 2-in	As required
1670-00-937-0271	Tiedown assembly, 15-ft	78
	Webbing:	
8305-00-268-2411	Cotton, 1/4-in, type I	As required
8305-00-082-5752	Nylon, tubular, 1/2-in, natural	As required
8305-00-261-8584	Nylon, type X, treated, olive drab	As required