ARMY FM 10-527
AIR FORCE TO 13C7-10-191

AIRDROP OF SUPPLIES AND EQUIPMENT:

RIGGING 155-MM HOWITZERS

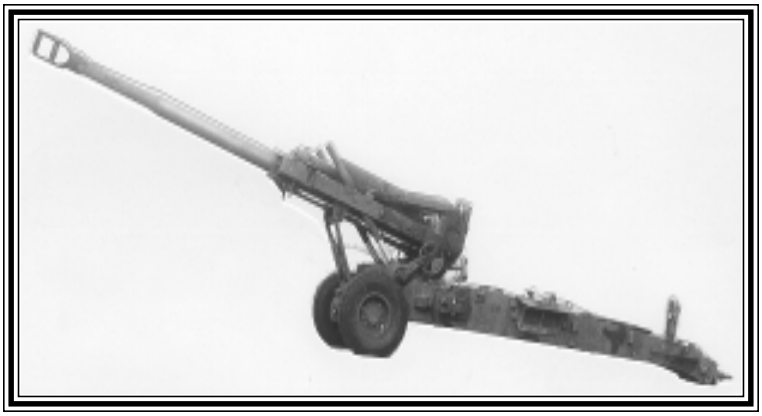

DISTRIBUTION RESTRICTION: Approved for public release; distribution is unlimited.

HEADQUARTERS
DEPARTMENT OF THE ARMY
DEPARTMENT OF THE AIR FORCE

CHANGE
No. 4

HEADQUARTERS
DEPARTMENT OF THE ARMY
DEPARTMENT OF THE AIR FORCE
Washington, DC, 11 January 2002

AIRDROP OF SUPPLIES AND EQUIPMENT:

RIGGING 155-MM HOWITZERS

This change adds the procedures for rigging the M198, 155-mm howitzer for low-velocity airdrop on the type V platform.

FM 10-527/TO 13C7-10-191, 30 September 1982, is changed as follows:

1. New or changed material is identified by a vertical bar in the margin opposite the changed material.
2. File this transmittal page in front of the publication.
3. Remove old pages and insert new pages as indicated below:

Remove old pages	Insert new pages
Cover	Cover
i and ii	i and ii
4-3 through 4-8	4-3 through 4-8
4-13 through 4-16	4-13 through 4-16
References-1	References-1and 2

DISTRIBUTION RESTRICTION: Approved for public release; distribution is unlimited.

FIELD MANUAL
NO 10-527
TECHNICAL ORDER
NO 13C7-10-191

HEADQUARTERS
DEPARTMENT OF THE ARMY
DEPARTMENT OF THE AIR FORCE
Washington, DC, 30 September 1982

AIRDROP OF SUPPLIES AND EQUIPMENT: RIGGING 155-MM HOWITZERS

TABLE OF CONTENTS

Page

PREFACE.....v

CHAPTER 1 INTRODUCTION
Description of Items.....1-1
Special Considerations.....1-1

CHAPTER 2 RIGGING M198, 155-MM HOWITZER ON TYPE II OR LAPE PLATFORM

Section I RIGGING HOWITZER FOR LOW-VELOCITY AIRDROP ON TYPE II PLATFORM
Description of Load.....2-1
Preparing Platform.....2-1
Building and Placing Honeycomb Stacks.....2-2
Stowing Accompanying Equipment..... 2-5
Preparing Howitzer.....2-6
Installing Suspension Slings..... 2-13
Setting Howitzer on Platform.....2-14
Lashing Howitzer.....2-14
Covering Load and Safetying Slings.....2-17
Stowing Cargo Parachutes.....2-18
Installing Extraction System.....2-19
Installing Emergency Restraint.....2-21
Installing Release System..... 2-21

DISTRIBUTION RESTRICTION: Approved for public release; distribution is unlimited.

* This publication supercedes FM 10-527/TO 13C7-10-191, 15 August 1975.

Page

Placing Extraction Parachute....2-22
Marking Rigged Load....2-23
Equipment Required....2-23

Section II RIGGING HOWITZER FOR LAPE AIRDROP ON LAPE PLATFORM
Description of Load.... 2-26
Preparing Platform.... 2-26
Building and Placing Honeycomb Stacks.... 2-26
Stowing Accompanying Equipment....2-26
Preparing Howitzer.... 2-30
Installing Suspension Slings.... 2-30
Setting Howitzer on Platform....2-30
Lashing Howitzer....2-30
Installing Extraction System.... 2-34
Placing Extraction Parachutes....2-36
Marking Rigged Load....2-36
Equipment Required....2-36

CHAPTER 3 RIGGING M1141A, 155-MM HOWITZER ON TYPE II OR LAPE PLATFORM

SECTION I RIGGING HOWITZER FOR LOW-VELOCITY AIRDROP ON TYPE II PLATFORM
Description of Load....3-1
Preparing Platform....3-1
Stowing Accompanying Load....3-2
Stowing Accompanying Equipment....3-8
Building and Placing Honeycomb Stacks.... 3-10
Preparing Howitzer.... 3-11
Installing and Safetying Suspension Slings.... 3-16
Setting Howitzer on Platform....3-17
Lashing Howitzer....3-17
Installing Emergency Restraint....3-20
Stowing Cargo Parachutes....3-21
Installing Extraction System.... 3-23
Installing Release System.... 3-25
Placing Extraction Parachute.... 2-25
Marking Rigged Load....3-26
Stowing Fuses and Primer.... 3-26
Equipment Required....3-27

SECTION II RIGGING HOWITZER FOR LAPE AIRDROP ON A LAPE PLATFORM
Description of Load.... 3-30
Preparing Platform.... 3-30

4-3. Building and Positioning Honeycomb Stacks

Build five honeycomb stacks and place them on the platform as shown in Figures 4-2 through 4-6.

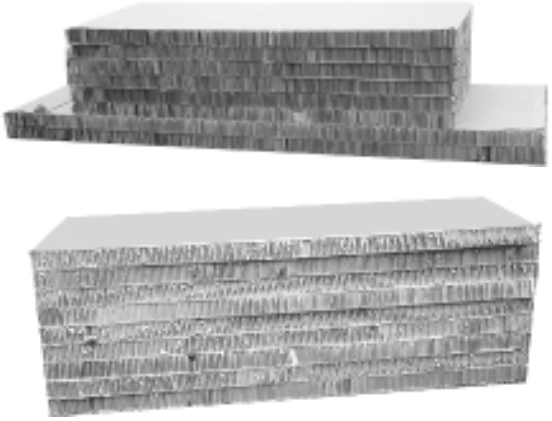

STACK 1

STACK 2

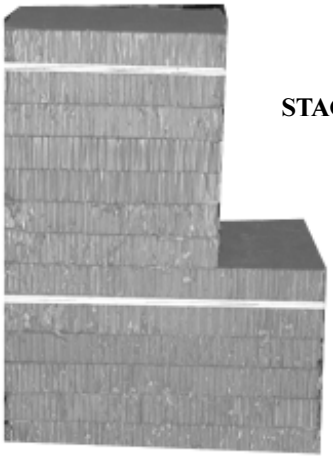

STACK 3

Stack Number	Pieces	Width (Inches)	Length (Inches)	Material	Instructions
1	*2	36	9	Honeycomb	Use honeycomb to make a two-layer base 105 inches long.
	*2	36	96	Honeycomb	
	6	36	75	Honeycomb	Stack and center the 75-inch pieces on the base.
2	9	30	80	Honeycomb	Form a stack.
3	5	30	18	Honeycomb	Form base.
	1	30	18	3/4-inch plywood	Place on top of honeycomb base.
	1	30	18	Honeycomb	Place on top of plywood.
	6	20	18	Honeycomb	Place on top of 30- by 18-inch honeycomb.
	1	20	18	3/4-inch plywood	Place on top of 6 layers of honeycomb.
	1	20	18	Honeycomb	Place on top of plywood.

***Alternate the sizes of honeycomb in each layer.**

Figure 4-2. Honeycomb stacks 1, 2, and 3 prepared.

STACKS 4 AND 5

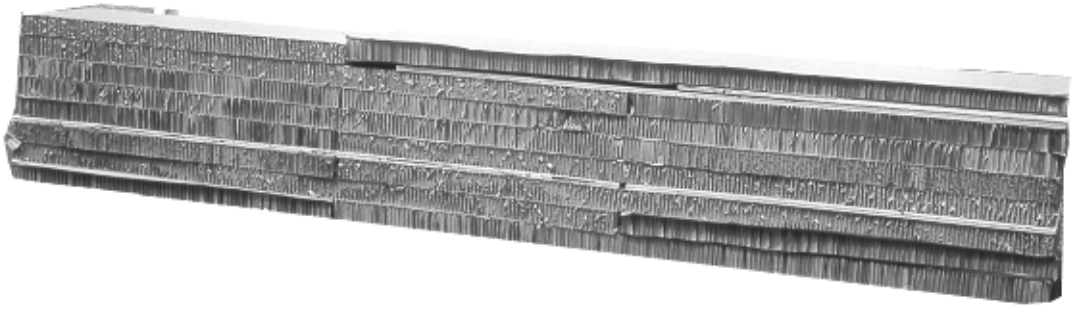

Stack Number	Pieces	Width (Inches)	Length (Inches)	Material	Instructions
4 and 5	*3 *3	18 18	96 54	Honeycomb Honeycomb	Use honeycomb to make a three -layer base 150 inches long.
	1	18	96	3/4-inch plywood	Form a plywood layer 150 inches long over the honeycomb base.
	1	18	54	3/4-inch plywood	
	*4	18	96	Honeycomb	Use honeycomb to make four layers 150 inches long.
	*4	18	54	Honeycomb	
	1	18	88	3/4-inch plywood	Place plywood on top of the four layers of the honeycomb on the front edge of the stack.
	1	18	48	3/4-inch plywood	Place plywood on top of the 88-inch piece flush with the front of the stack.
	1	18	96	Honeycomb	Use honeycomb to make a layer 150 inches long, and place it on top of the stack.
	1	18	54	Honeycomb	

***Alternate the sizes of honeycomb in each layer.**

Figure 4-3. Honeycomb stacks 4 and 5 prepared.

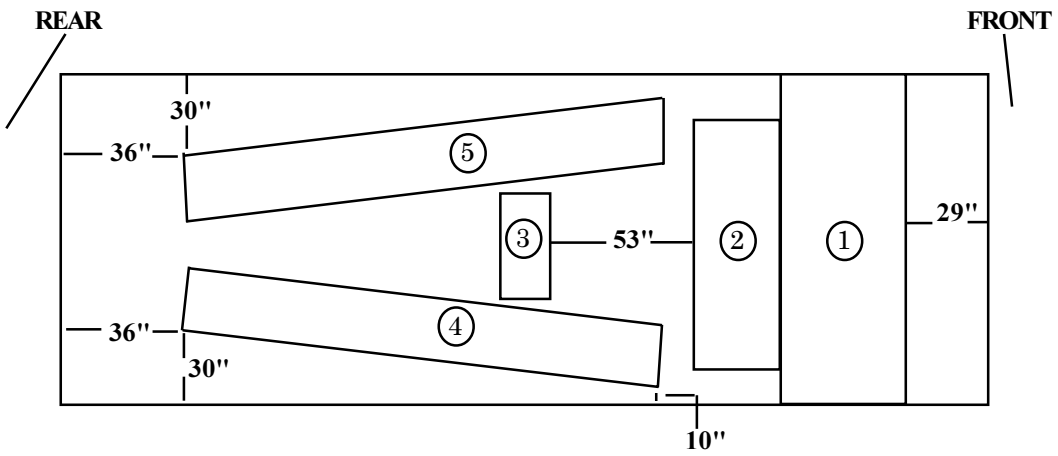

Note: Make sure the top portion of Stack 3 is toward the left side of the platform.

Stack Number	Position of Stack on Platform
	Place stack:
1	29 inches from the front edge of the platform and centered between the side rails.
2	flush against stack No 1 and centered between the side rails.
3	53 inches from stack No 2 and centered between the side rails. Make sure the top portion is toward the left side of the platform.
4	36 inches from the rear edge of the platform. Place the front outside corner 10 inches from the right rail. Place the rear outside corner 30 inches from the right rail.
5	36 inches from the rear edge of the platform. Place the front outside corner 10 inches from the left rail. Place the rear outside corner 30 inches from the left rail.

Figure 4-4. Honeycomb placed on platform.

REAR

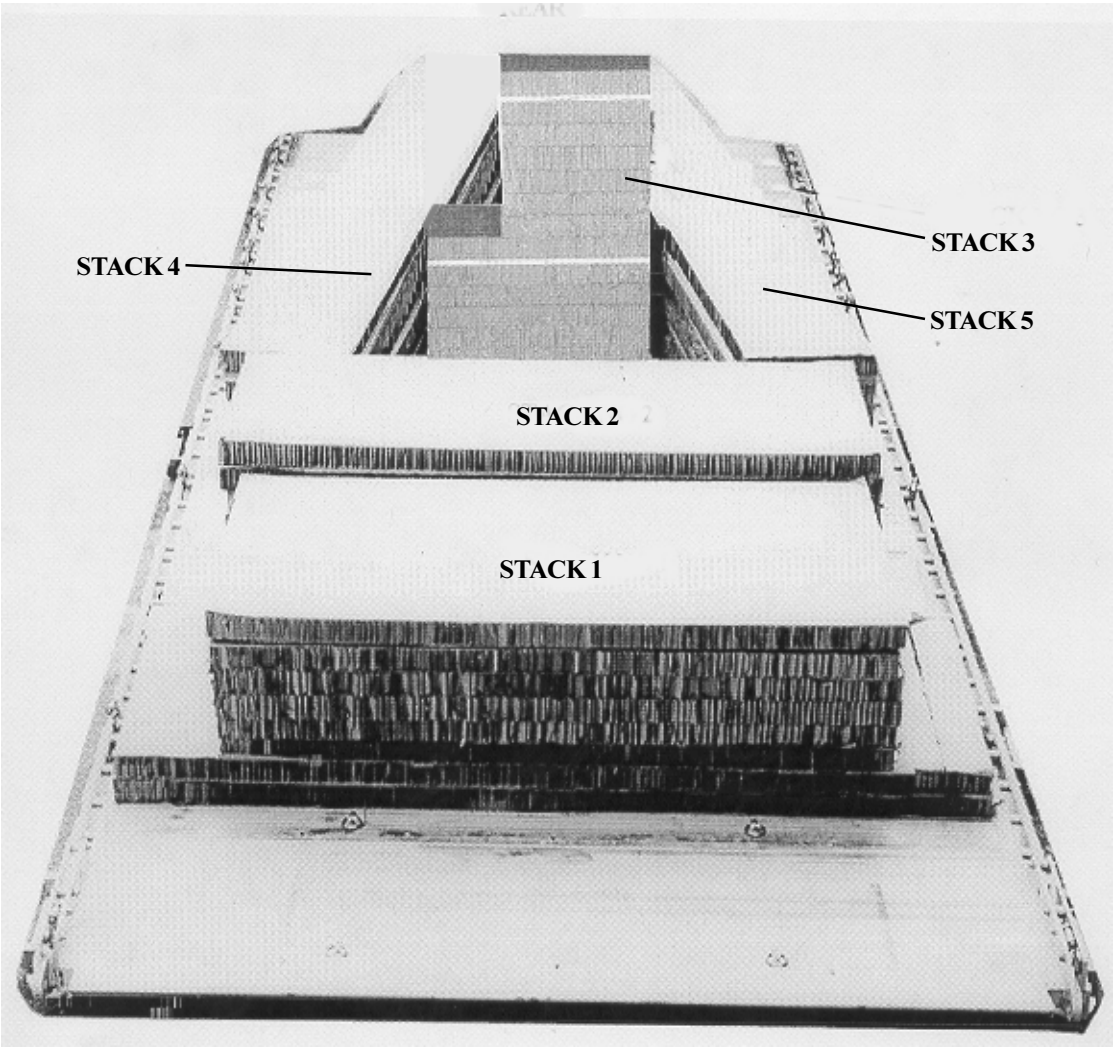

FRONT

Figure 4-5. Front view of honeycomb stacks.

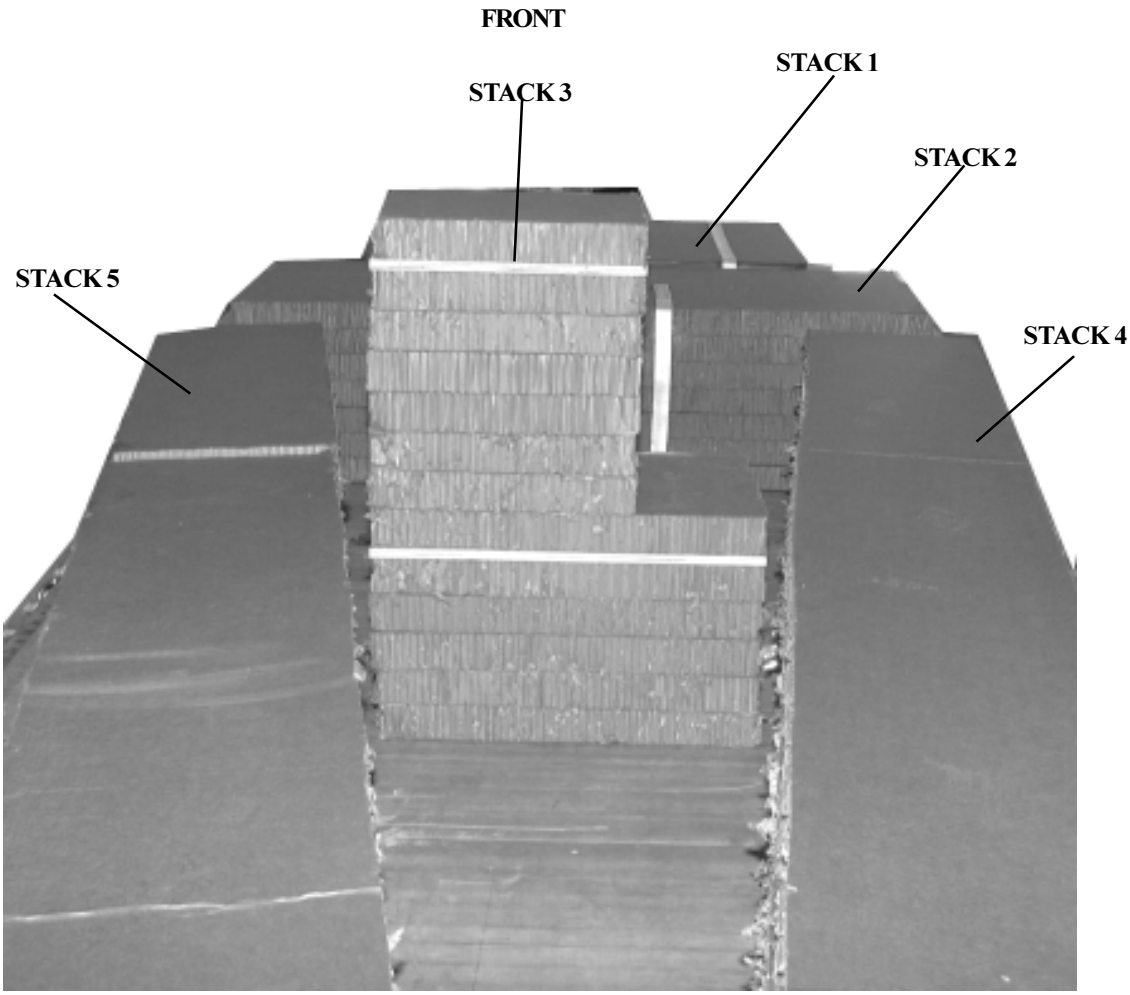

Figure 4-6. Rear view of honeycomb stacks.

4-4. Stowing Accompanying Equipment

If the accompanying equipment (para 4-1) is to be dropped, stow it as shown in Figure 4-7.

CAUTION
Stow the equipment in such a way that it will be no higher than stacks 4 and 5.

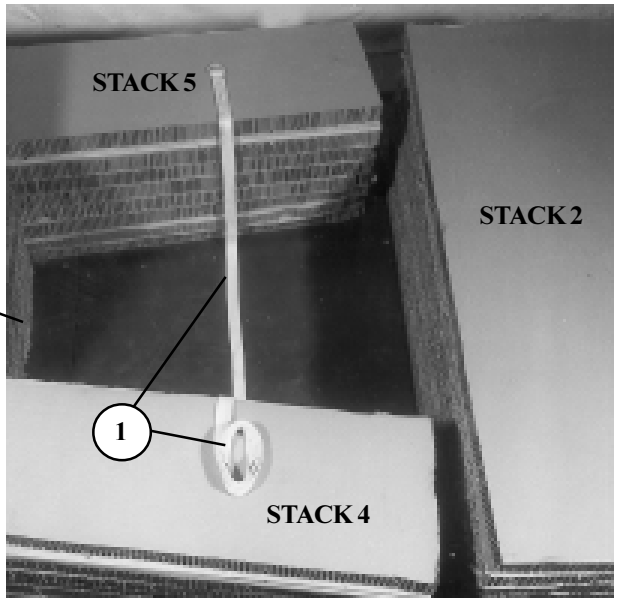

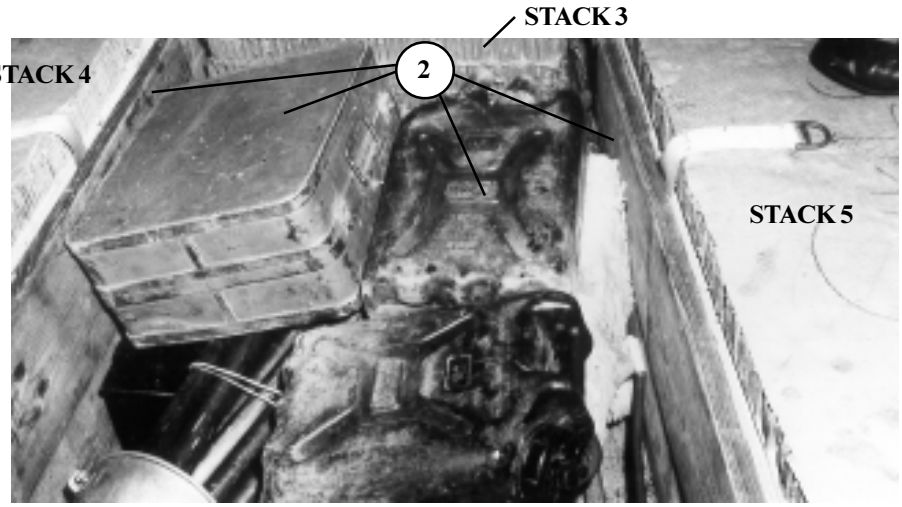

1 Lay a 15-foot tiedown strap on the platform across stacks 4 and 5 with the ends of the strap on top of these stacks.

2 Fit the accompanying equipment in the space between the stacks on top of the strap. If lumber is included in the accompanying equipment, stow it on its edge against stacks 4 and 5 as shown.

Figure 4-7. Accompanying equipment stowed.

Notes: 1. These drawings are not drawn to scale.
2. The actual width of 2- by 6-inch lumber is 5 1/2 inches.
3. The actual width of 2- by 10-inch lumber is 9 1/4 inches.

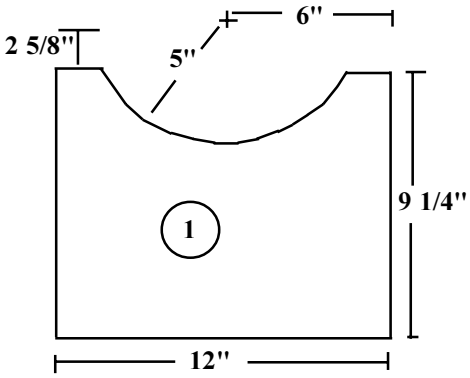

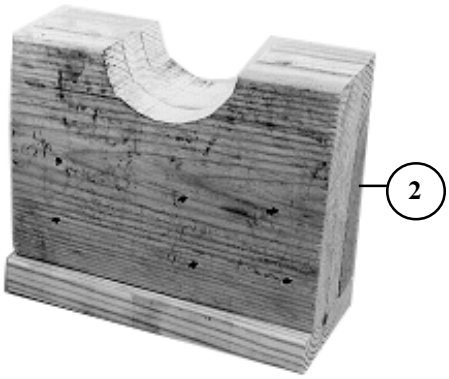

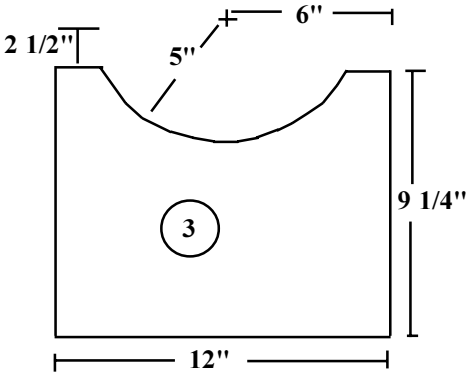

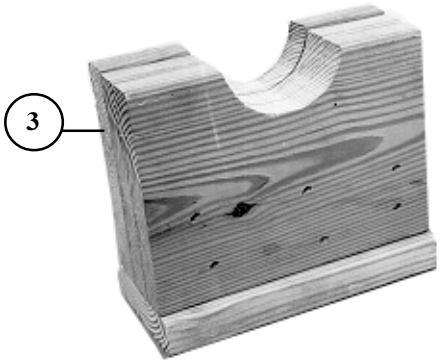

1 Make an arch-like cutout in three 2- by 10- by 12-inch pieces of lumber.

2 Nail the pieces together and to a 2- by 6- by 12-inch piece of lumber with 20d nails.

3 Make an arch-like cutout in three 2- by 10- by 12-inch pieces of lumber. Nail the pieces as in step 2.

Figure 4-10. Forward gun tube support blocks constructed.

c. Prepare the radio as shown in Figure 4-10.1. Prepare the power supply distribution unit and batteries as shown in Figure 4-10.2. Prepare the howitzer as shown in Figures 4-11 through 4-16. Place the gun tube in the stowed position before preparing the howitzer.

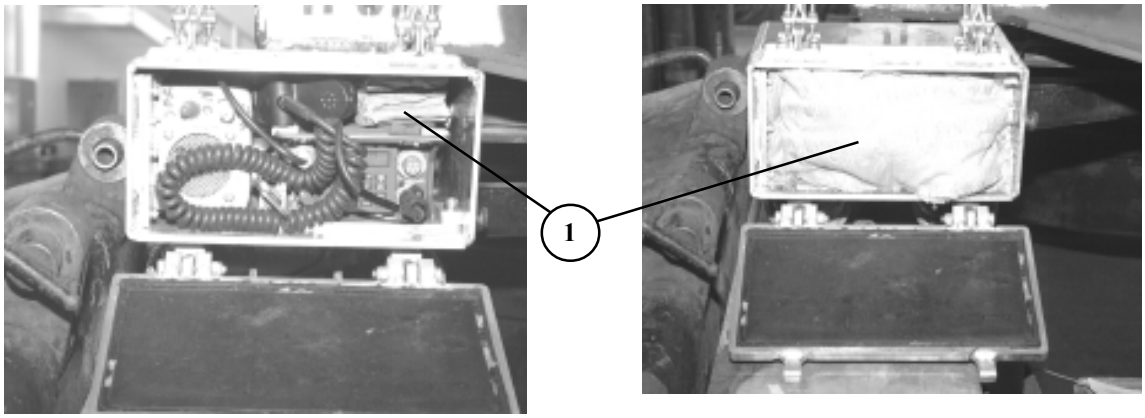

1 Place honeycomb on top of the radio inside box. Pad the front of the radio with cellulose wadding and secure the box latches.

Figure 4-10.1. Radio prepared.

Note: Located on both left and right trails are three boxes containing the power supply distribution unit, radio, and batteries. Each box is mounted to a set of shock coils.

Step:

1. Place a strip of honeycomb inside all shock coils of each box.

Note: Make sure the honeycomb is vertical allowing for maximum absorption during impact.

2. Cut honeycomb to fit into the shock coils.

Figure 4-10.2. Power supply distribution unit and batteries prepared.

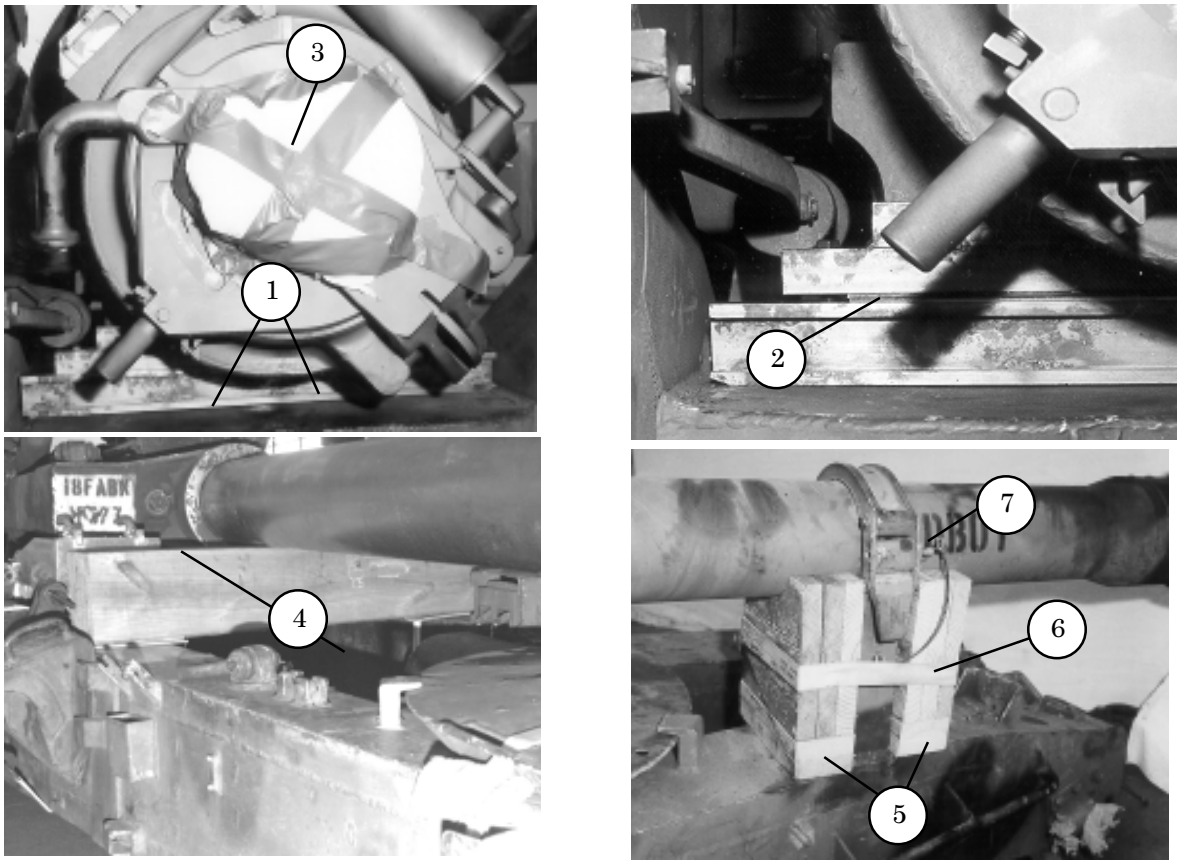

1. Move the gun tube of the howitzer to the stowed position. Raise the tube, and place the metal support bracket (Figure 4-8) under the breechblock. Be sure that the fit is snug.

2. The bracket should not move when the breechblock rests on it. If necessary, remove and disassemble the bracket and place metal shims in the space provided. Reassemble and replace the bracket. A bracket with shims installed is shown in the above photograph.

3. Pad the end of the breechblock with cellulose wadding. Tape the wadding in place.

4. Set the rear gun support block on the trails under the rear of the tube. Allow 1-inch clearance between the rear gun tube support block and the radio box.

5. Set the forward gun tube support blocks (Figure 4-10) on the left trail against the gun travel lock. The block with the slightly deeper cut fits on the breech side of the tube travel lock. If necessary, place plywood or lumber shims between the trail and the block for a snug fit. (The gun shown needed an additional piece of 2- by 6-inch lumber on the base of each block.)

6. Lash the support blocks to the gun tube travel lock with a 15-foot tiedown assembly.

7. Close the gun tube travel lock, and secure it with the pin provided.

8. Cover the muzzle and muzzle brake with plastic wrap, or insert the plug provided with the gun into the muzzle (not shown).

Figure 4-11. Gun tube prepared.

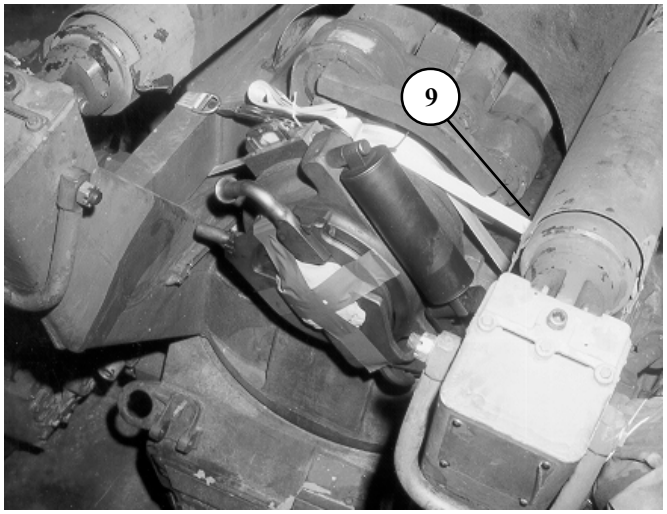

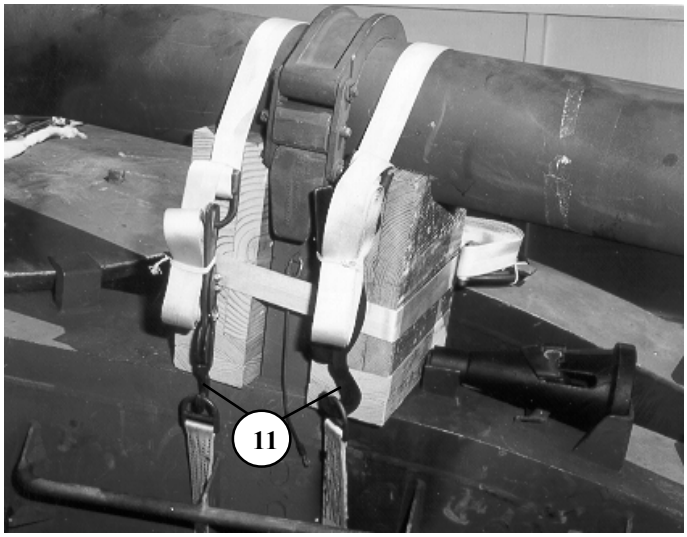

9 Secure the breechblock with a 15-foot tiedown assembly. Run the strap under the cradle assembly, over the breechblock, and under the thermal warning device.

10 Put the breechblock cover on the breechblock (not shown).

11 Lash the gun tube to the left trail with two 15-foot tiedown assemblies. Run one strap around each support block. (Position load binder as shown)

Figure 4-12. Gun tube lashed.

REFERENCES

AFJMAN 24-204/TM 38-250/ NAVSUP PUB 505/MCO P 4030.19F/ DLAM 4145.3	Packaging and Materials Handling: Preparing Hazardous Materials for Military Air Shipment. November 1994.
***FM 10-500-2 (4-20.102)/TO 13C7-1-5**	Airdrop of Supplies and Equipment: Rigging Airdrop Platforms. August 2001.
****FM 10-517 (4-20.117)/TO 13C7-1-111**	Airdrop of Supplies and Equipment: Rigging 1 1/4-Ton Utility Truck (HMMWV). October 2001.
FM 10-500-53/MCRP 4-3.8/ TO 13C7-18-41	Airdrop of Supplies and Equipment: Rigging Ammunition. August 1996.
TM 10-1670-208-20&P	Organizational Maintenance Manual Including Repair Parts and Special Tools List for Platforms, Types II Modular and LAPES/Airdrop Modular. August 1978.
TM 10-1670-268-20&P	Organizational Maintenance Manual With Repair Parts and Special Tools List: Type V Platform. June 1986.
TM 10-1670-276-23&P/ TO 13C5-29-2/NAVAIR 13-1-29	Unit and Intermediate DS Maintenance Manual Including Repair Parts and Special Tools List for Parachute, Cargo Type 26-ft Diam, High Velocity. September 1990.
TM 10-1670-277-23&P/ TO 13C5-28-2/NAVAIR 13-1-30	Unit and Intermediate DS Maintenance Manual Including Repair Parts and Special Tools List for Parachute, 28-foot Diam, Extraction. October 1990.
TM 10-1670-278-23&P/ TO 13C5-26-2/NAVAIR 13-1-27/ TM 01109C-23&P/1	Unit and Intermediate DS Maintenance Manual Including Repair Parts and Special Tools List for Parachute, 15-foot Diam, Extraction. November 1989.
TM 10-1670-280-23&P/ TO 13C5-31-2/NAVAIR 13-1-31	Unit and Intermediate DS Maintenance Manual Including Repair Parts and Special Tools List for Parachute, Cargo Type, G-11A, G-11B, and G-11C. August 1991.

TM 10-1670-281-23 & P/ TO 13C5-32-2/NAVAIR 13-1-32	Unit and Intermediate DS Maintenance Manual Including Repair Parts and Special Tools List for Parachute, Cargo Type, G-12D and G-12E. October 1990.
TM 10-1670-282-23 & P/ TO 13C5-30-2/NAVAIR 13-1-33	Unit and Intermediate DS Maintenance Manual Including Repair Parts and Special Tools List for Parachute, Cargo Type, G-14. September 1991.
AFTO Form 22	Technical Order Publication Improvement Report
DA Form 2028	Recommended Changes to Publication and Blank Forms. February 1974.
***Shippers Declaration for Dangerous Goods**	Locally procured form.

***FM 4-20.102/TO 13C7-1-5 has superseded FM 10-500-2. Change 4 reflects this change. The basic manual still references the superseded publication. You may wish to make pen and ink changes to update the old reference citations accordingly.**

****FM 4-20.117/TO 13C7-1-111 has superseded FM 10-517. Change 4 reflects this change. The basic manual still references the superseded publication. You may wish to make pen and ink changes to update the old reference citations accordingly.**

*****Shippers Declaration for Dangerous Goods has superseded DD Form 1387-2 (February 1982). Change 3 reflects this change. The basic manual still references the superseded publication. You may wish to make pen and ink changes to update the old reference citations accordingly.**