FM 10-500-23/TO 13C7-14-461

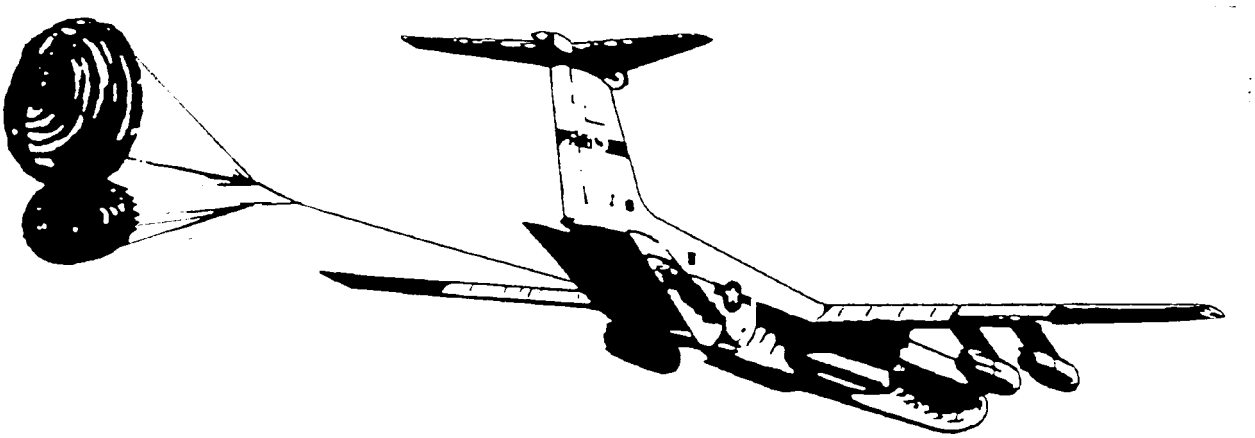

AIRDROP OF SUPPLIES AND EQUIPMENT:

RIGGING COMMUNICATION CONTROL VEHICLES

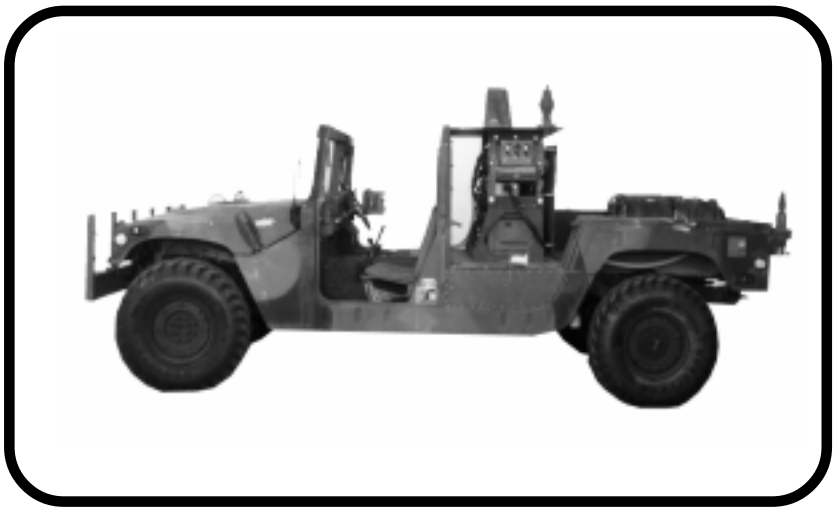

DISTRIBUTION RESTRICTION: Approved for public release; distribution is unlimited.

HEADQUARTERS
DEPARTMENT OF THE ARMY
DEPARTMENT OF THE AIR FORCE

FIELD MANUAL
No. 10-500-23
TECHNICAL ORDER
No. 13C7-14-461

HEADQUARTERS
DEPARTMENT OF THE ARMY
DEPARTMENT OF THE AIR FORCE
WASHINGTON, DC,

AIRDROP OF SUPPLIES AND EQUIPMENT: RIGGING COMMUNICATION CONTROL VEHICLES

TABLE OF CONTENTS

		Paragraph	Page
PREFACE			iv
CHAPTER 1	Introduction		
	Description of Items	1-1	1-1
	Special Considerations	1-2	1-1
CHAPTER 2	**RIGGING THE MOBILE MICROWAVE LANDING SYSTEM (MMLS) IN AN M998 HMMWV TRUCK AND AN M116A2 3/4-TON TRAILER ON A 24-FOOT, TYPE V PLATFORM FOR LOW-VELOCITY AIRDROP**		
	Description of Load	2-1	2-1
	Preparing Platform	2-2	2-1
	Building the Honeycomb Stacks	2-3	2-3
	Installing HDDS and Positioning Honeycomb Stacks	2-4	2-8
	Preparing HMMWV	2-5	2-9
	Preparing the 3/4-ton M1162A Trailer	2-6	2-9
	Prerparing the Truck Cargo Bed	2-7	2-10
	Loading the Truck Cargo Bed	2-8	2-12
	Preparing Trailer Cargo Bed	2-9	2-16
	Placing Load in Trailer	2-10	2-17
	Placing Truck and Trailer on Platform	2-11	2-20
	Lashing Truck and Trailer to Platform	2-12	2-21
	Installing Suspension Slings and Deadman Tie	2-13	2-24
	Building Parachute Stowage Platform	2-14	2-25
	Installing Parachute Stowage Platform, Preparing and Stowing Cargo Parachutes	2-15	2-26
	Installing Parachute Release	2-16	2-27
	Installing Extraction System	2-17	2-28
	Placing Extraction Parachute	2-18	2-29
	Installing Provisions for Emergency Restraints	2-19	2-29
	Marking Rigged Load	2-20	2-29
	Equipment Required	2-21	2-29

DISTRIBUTION RESTRICTION: Approved for public release; distribution is unlimited.

*** This manual supersedes FM 10-523/TO 13C7-14-461, 5 March 1982.**

		Paragraph	Page
CHAPTER 3	**RIGGING THE STANDARD INTERGRADED COMMAND POST SYSTEM (SICPS) WITH THE COMMON HARDWARE/SOFTWARE 2ND GENERATION PACKAGE (CHS-2) ON A 20-FOOT, TYPE V PLATFORM FOR LOW-VELOCITY AIRDROP**		
	Description of Load	3-1	3-1
	Preparing Platform	3-2	3-2
	Building and Positioning Honeycomb Stacks for the SICPS	3-3	3-3
	Building and Positioning Honeycomb Stacks for the CHS-2	3-4	3-4
	Rigging the SICPS in the M1097 HMMWV	3-5	3-7
	Positioning the CHS-2 Equipment on the Platform	3-6	3-18
	Lashing the CHS-2 Equipment to the Platform	3-7	3-22
	Positioning HMMWV on the Platform	3-8	3-24
	Lashing HMMWV to the Platform	3-9	3-25
	Installing Load Cover, Suspension Slings and Deadman Tie	3-10	3-28
	Preparing and Stowing Cargo Parachutes and Installing Extraction System	3-11	3-29
	Installing Parachute Release	3-12	3-30
	Placing Extraction Parachute	3-13	3-31
	Installing Provisions for Emergency Restraints	3-14	3-31
	Marking Rigged Load	3-15	3-31
	Equipment Required	3-16	3-31
CHAPTER 4	**RIGGING THE COMMAND ASSAULT VEHICLE (CAV) ON A 20-FOOT, TYPE V AIRDROP PLATFORM FOR LOW-VELOCITY AIRDROP**		
	Description of Load	4-1	4-1
	Preparing Platform	4-2	4-1
	Building and Positioning Honeycomb Stacks	4-3	4-3
	Preparing the CAV with the Communication Equipment	4-4	4-6
	Lifting and Positioning CAV	4-5	4-10
	Lashing CAV to Platform	4-6	4-11
	Installing Suspension System	4-7	4-12
	Stowing Cargo Parachutes and Installing EFTC System	4-8	4-13
	Installing Parachute Release	4-9	4-15
	Placing Extraction Parachute	4-10	4-16
	Installing Provisions for Emergency Restraints	4-11	4-16
	Marking Rigged Load	4-12	4-16
	Equipment Required	4-13	4-16
CHAPTER 5	**RIGGING THE M998 CARGO/TROOP CARRIER (TWO SEATER) WITH GRC/206 AIR FORCE PALLET ON A 16-FOOT, TYPE V PLATFORM FOR LOW-VELOCITY AIRDROP**		
	Description of Load	5-1	5-1
	Preparing Platform	5-2	5-1
	Building and Placing the Honeycomb Stacks	5-3	5-3
	Preparing Truck and Installing Lifting Slings	5-4	5-11

	Paragraph	Page
Positioning Truck	5-5	5-26
Lashing Truck	5-6	5-27
Building Body Side Boards	5-7	5-29
Securing Body Side Boards	5-8	5-30
Securing Top Tow Plate	5-9	5-31
Installing Suspension Slings and Deadman Tie	5-10	5-32
Stowing Cargo Parachutes	5-11	5-33
Installing Extraction System	5-12	5-34
Installing Release Assembly	5-13	5-35
Placing Extraction Parachute	5-14	5-36
Installing Provisions for Emergency Restraints	5-15	5-36
Marking Rigged Load	5-16	5-36
Equipment Required	5-17	5-36

CHAPTER 6 RIGGING THE M998 CARGO/TROOP CARRIER (FOUR SEATER) WITH GRC/206 AIR FORCE PALLET ON A 16-FOOT, TYPE V PLATFORM FOR LOW-VELOCITY AIRDROP

Description of Load	6-1	6-1
Preparing Platform	6-2	6-1
Building and Positioning Honeycomb Stacks	6-3	6-1
Preparing Truck	6-4	6-2
Installing Lifting Slings	6-5	6-13
Positioning Truck	6-6	6-13
Lashing Truck	6-7	6-14
Building Body Side Boards	6-8	6-14
Securing Body Side Boards	6-9	6-15
Installing Suspension Slings and Deadman Tie	6-10	6-16
Stowing Cargo Parachutes	6-11	6-17
Installing Extraction System	6-12	6-17
Installing Release System	6-13	6-17
Placing Extraction Parachute	6-14	6-17
Installing Provisions for Emergency Restraints	6-15	6-17
Marking Rigged Load	6-16	6-17
Equipment Required	6-17	6-17

GLOSSARY **Glossary-1**

REFERENCES **References-1**

PREFACE

SCOPE

This manual tells and shows how to prepare and rig the Mobile Microwave Landing System (MMLS) which is packed in 11 hard-shell protective cases. The cases are rigged with four 3kw generators and four fuel cans in the beds of an M998 HMMWV truck and an M116A2 3/4-ton trailer. The load is rigged on a 24-foot, type V platform with three G-11 cargo parachutes for low-velocity airdrop from a C-130, C-141, C-5, and C-17.

The Standard Intergraded Command Post System (SICPS) and the Common Hardware/Software 2nd Generation Package (CHS-2) are rigged on a 20-foot, type V airdrop platform with three G-11 cargo parachutes for low-velocity airdrop from a C-130, C-141, C-5, and C-17.

The M996 CAV is rigged on a 20-foot, type V airdrop platform for low-velocity airdrop from a C-130, C-141, C-5, and C-17. The load requires three G-11 cargo parachutes. The CAV is rigged with communication equipment.

The M998 cargo/troop carrier (two seater) is rigged with a radio equipment GRC/206 Air Force pallet. Other equipment included on the load is the 1.5-kilowatt, 28-VDC generator set, two cable spools, two 5-gallon fuel cans, and one 5-gallon water can. The load requires two G-ll cargo parachutes and is rigged for low-velocity airdrop from a C-130, C-141, C-5, and C-17.

The M998 cargo/troop carrier (four seater), is rigged with a radio equipment GRC/206 Air Force pallet. Other equipment included on the load is one cable spool, two 5-gallon fuel cans, one 5-gallon water can, one roll of field wire, one set of slave cables, and one camouflage net with support poles. Also included with this load are one shovel, one ax, two sets of antennas, 2 quarts of oil, 1 quart of transmission fluid, one funnel, and one fuel nozzle. The truck weighs 6,020 pounds with 3/4 tank of fuel and equipment installed. The load requires two G-ll cargo parachutes and is rigged for low-velocity airdrop from a C-130, C-141, C-5, and C-17.

USER INFORMATION

The proponent of this publication is HQ TRADOC. You are encouraged to report any errors or omissions and to suggest ways to make this a better manual. Army personnel, send your comments on DA Form 2028 directly to:

Director
Aerial Delivery and Field Services Department
USA Quartermaster Center and School
1010 Shop Road
Fort Lee, Virginia 23801-1502

Air Force personnel, send your reports on AFTO Form 22 through:

Headquarters
Air Mobility Command (AMC/DOKT)
402 Scott Drive, Unit 3A1
Scott AFB, Illinois 62225-5302

Air Force personnel in Special Operations Command, send your reports on AFTO Form 22 through:

HQ AFSOC/DOXT
100 Bartley St., Suite 2260
Hurlburt Field, Florida 32544-5273

to:

Director
Aerial Delivery and Field Services Department
USA Quartermaster Center and School
1010 Shop Road
Fort Lee, Virginia 23801-1502

Also send information copy of AFTO Form 22 to:

SA-ALC/TILDP
485 Quentin Roosevelt Road
Kelly AFB, Texas 78241-6421

Unless this publication states otherwise, masculine nouns and pronouns do not refer exclusively to men.

CHAPTER 1

INTRODUCTION

1-1. Description of Items

The description for the items covered in this manual are described below:

a. Mobile Microwave Landing System (MMLS). The MMLS is packed in 11 hard-shell protective cases. It is rigged in the bed of an M998 HMMWV truck and an M116A2 3/4-ton trailer.

b. Standard Intergrated Command Post System (SICPS). The SICPS and the Common Hardware/Software 2nd Generation Package (CHS-2) are rigged in an M1097 HMMWV Cargo/Troop carrier.

c. Command Assault Vehicle (CAV). The M996 HMMWV is rigged with communication equipment bolted to the racks.

d. M998 Cargo/Troop Carrier (Two Seater) With GRC/206 Air Force Pallet. The M998 two seater is rigged with radio equipment GRC/206 Air Force pallet.

e. M998 Cargo/Troop Carrier (Four Seater) With GRC/206 Air Force Pallet. The M998 four seater is rigged with radio equipment GRC/206 Air Force pallet.

1-2. Special Considerations

Special considerations for this manual are given below:

a. The loads covered in this manual may include hazardous materials as defined in AFJMAN 24-204/TM 38-250. If included, the hazardous materials must be packaged, marked, and labeled as required by AFJMAN 24-204/TM-38-250.

b. A copy of this manual must be available to the joint airdrop inspectors during the before- and after-loading inspections.

c. You will need a copy of FM 10-517/TO 13C-1-111 and FM 10-500-66/TO 13C7-25-71to rig this load.

CHAPTER 2

RIGGING THE MOBILE MICROWAVE LANDING SYSTEM (MMLS) IN AN M998 HMMWV TRUCK AND AN M116A2 3/4-TON TRAILER ON A 24-FOOT, TYPE V PLATFORM FOR LOW-VELOCITY AIRDROP

2-1. Description of Load

The Mobile Microwave Landing System (MMLS) is packed in 11 hard-shell protective cases. The cases are rigged with four 3kw generators and four fuel cans in the beds of an M998 HMMWV truck and an M116A2 3/4-ton trailer. The load is rigged on a 24-foot, type V platform with three G-11 cargo parachutes for low-velocity airdrop.

2-2. Preparing Platform

Prepare a 24-foot, type V airdrop platform as shown in Figure 2-1.

NOTES:
1. The nose bumper may or may not be installed.
2. Measurements given in this load are from the front edge of the platform, NOT from the front edge of the nose bumper.

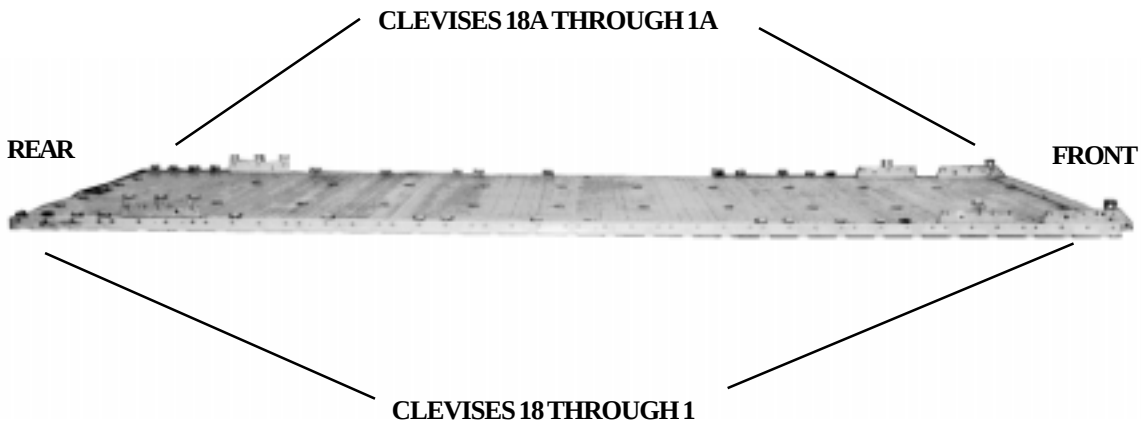

Step:

1. Inspect, or assemble and inspect, a 24-foot, type V airdrop platform as outlined in TM 10-1670-268-20&P/TO 13C7-52-22.

2. Install suspension links to the right and left platform side rails using holes 6, 7, and 8.

3. Install a second set of suspension links to the right and left platform side rails using holes 41, 42, and 43.

4. Install a tandem link to the front of each platform side rail using holes 1, 2, and 3.

5. Install a clevis on bushing 1 of each tandem link.

6. Install a clevis on bushing 3 on the front suspension links.

7. Install clevises on bushings 1, 2, and 4 of each rear suspension links.

8. Starting at the front of each platform side rail, install clevises on the bushings bolted to holes 10, 11, 13, 15, 16, 26, 30, 31, 35, 39, 45, 46, 47, and 48.

9. Starting at the front of the platform, number the clevises 1 through 18 on the right side, and 1A through 18A on the left side.

10. Label the tie-down rings according to FM 10-500-2/TO 13C7-1-5.

Figure 2-1. Platform prepared

2-3. Building the Honeycomb Stacks

Build the honeycomb stacks as shown in Figures 2-2 through 2-6.

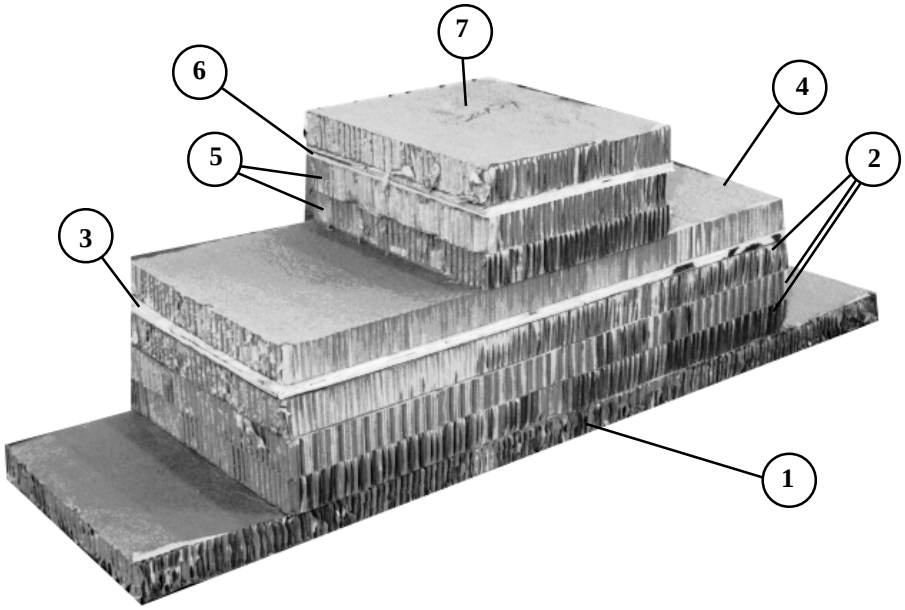

1. Use an 80- by 24-inch piece of honeycomb to form a base.
2. Center and glue three 54- by 24-inch pieces of honeycomb on the base.
3. Place and glue a 3/4- by 54- by 24-inch piece of plywood over the honeycomb placed in step 2 above.
4. Place and glue one 54- by 24-inch piece of honeycomb on top of the plywood placed in step 3 above.
5. Center and glue two 20- by 24-inch pieces of honeycomb on top of the honeycomb placed in step 4 above.
6. Place and glue a 3/4- by 20- by 24-inch piece of plywood over the honeycomb placed in step 5 above.
7. Place and glue one 20- by 24-inch piece of honeycomb on top of the plywood placed in step 6 above.

Figure 2-2. Stacks 1 and 3 prepared

Notes: 1. This drawing is not to scale.
2. All dimensions are given in inches.

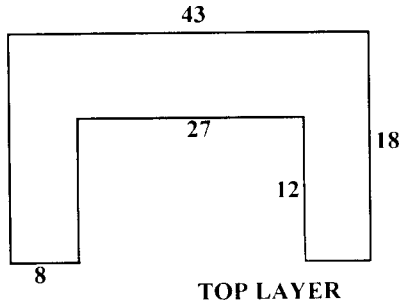

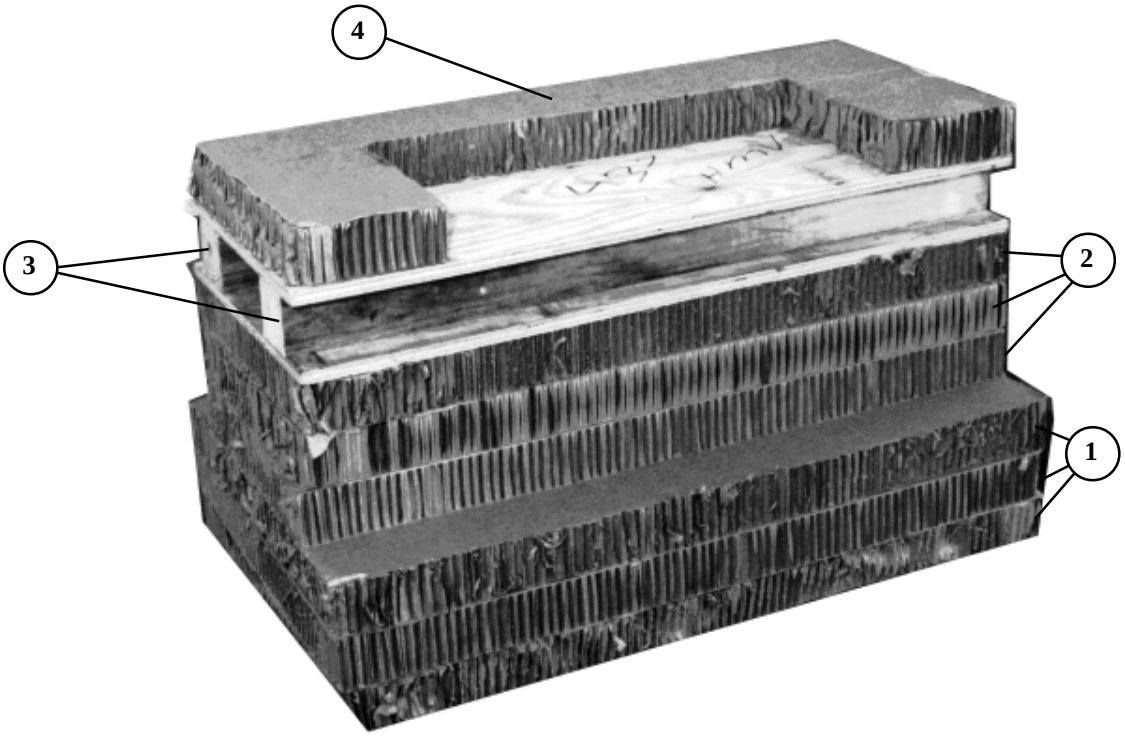

1 Glue three 43- by 26-inch pieces of honeycomb flush together to form a base.

2 Center and glue three 43- by 18-inch pieces of honeycomb flush on the base.

3 Nail a 43-inch piece of 4- by 4-inch lumber flush with each long side and 1 1/2 inches from each edge of a 3/4- by 43- by 18-inch piece of plywood. Nail a second 3/4- by 43- by 18-inch piece of plywood to the lumber and flush with the bottom piece of plywood. Glue the wood section of the stack flush on the honeycomb placed in step 2 above.

4 Make the cutout as shown in a 43- by 18-inch piece of honeycomb. Glue the honeycomb flush over the plywood.

Figure 2-3. Stack 2 prepared

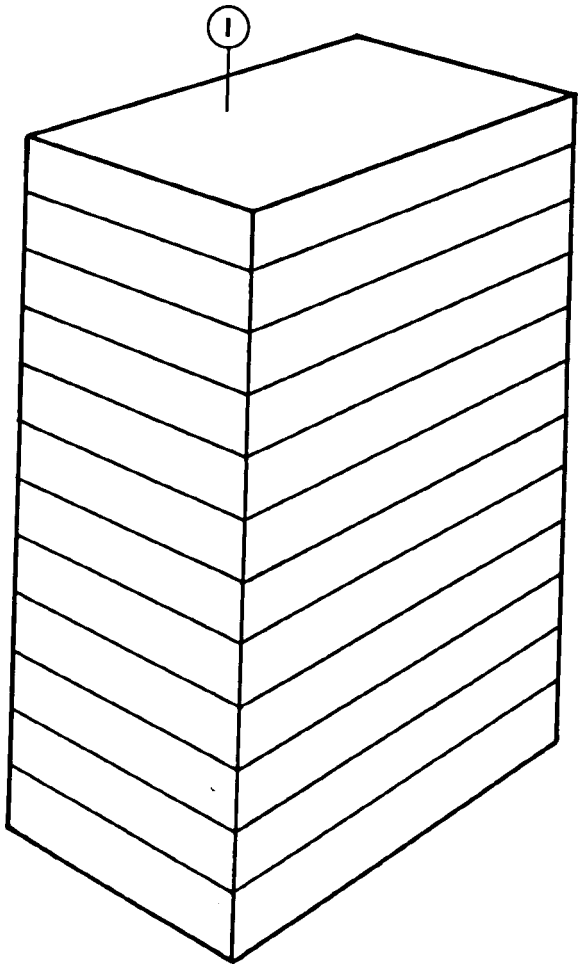

1 Glue twelve 36- by 12-inch pieces of honeycomb flush together.

Figure 2-4. Stack 4 prepared

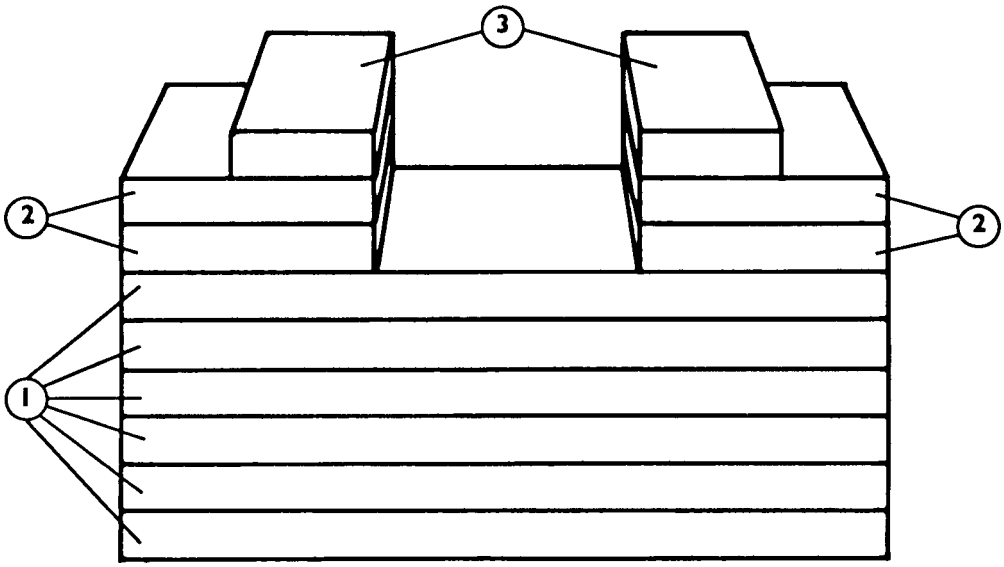

1 Glue six 36- by 12-inch pieces of honeycomb flush together to form the base.

2 Glue two pieces of 12- by 12-inch honeycomb on each side of the base.

3 Glue one 7- by 12-inch piece of honeycomb along the inside edge of each 12- by 12-inch stack.

Figure 2-5. Stack 5 prepared

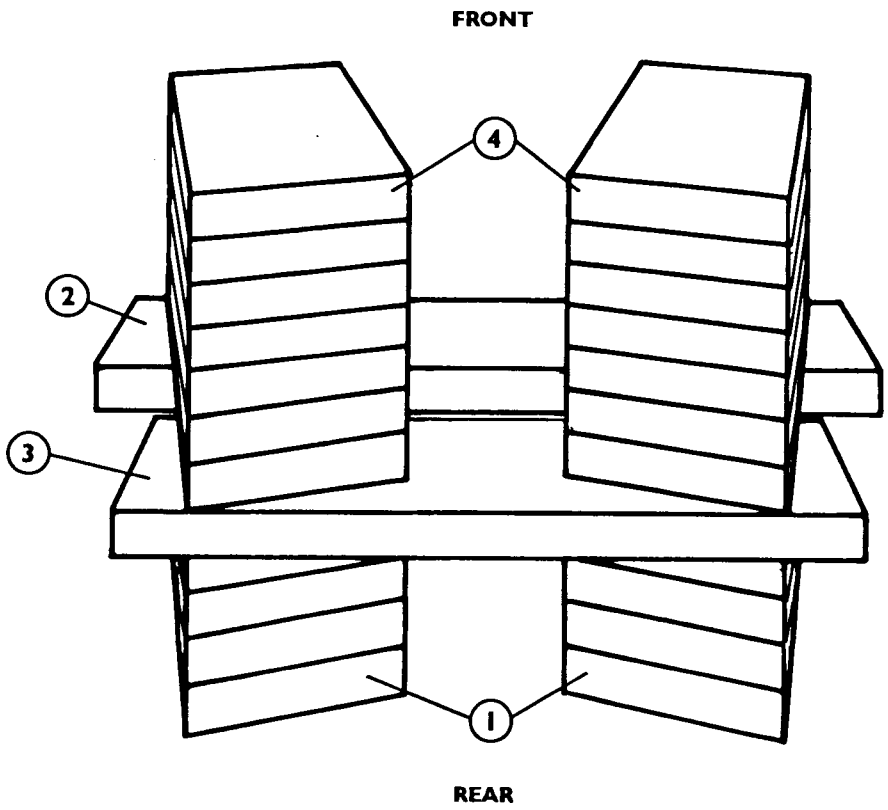

1. Use eight 12- by 32-inch pieces of honeycomb to form two base stacks of four layers each in a "V" shape. Place the stacks 25 inches apart in the front and 11 inches apart in the rear.

2. Place one 48- by 12-inch piece of honeycomb over the front of the base stacks to form a bridge. Position the honeycomb so that the front edge of the bridge is aligned with the front outside corners of the base stacks.

3. Place one 36- by 12-inch piece of honeycomb over the rear of the base stacks to form a bridge. Position the honeycomb so that the rear edge of the bridge is aligned with the rear outside corners of the base stacks.

4. Use fourteen 12- by 32-inch pieces of honeycomb to form two stacks of seven layers each. Place each stack on top of the bridge and align with each base stack.

Figure 2-6. Stack 6 prepared

2-4. Installing HDDS and Positioning Honeycomb Stacks

Install the HDDS and position the honeycomb stacks as shown in FM 10-500-66/TO 13C7-25-71and in Figure 2-7 below.

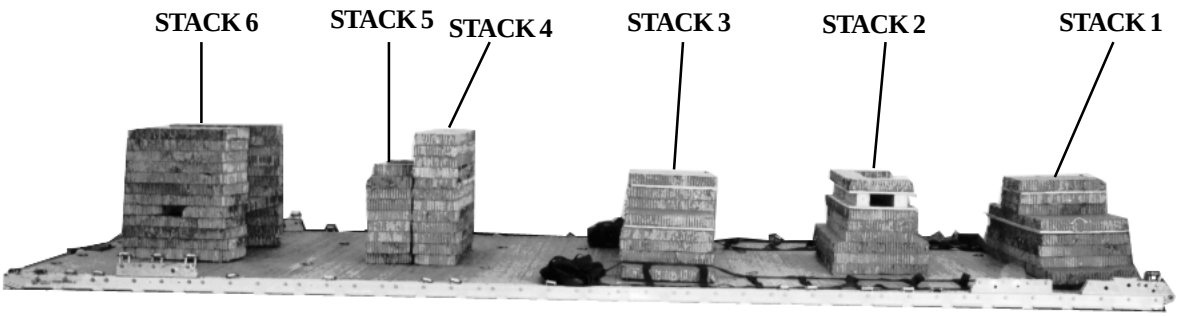

Note: The use of HDDS is optional.

Step:

1. Pass a 45-inch length of type V webbing or 1-inch tubular nylon webbing through tie-down ring A-1 through a HDDS end loop, and through the second bushing on the right tandem link. Knot the webbing according to FM 10-500-2/TO 13C7-1-5.

2. Perform the same operation on the left side, using tie-down ring B1 and the second bushing on the left tandem link.

3. Position stack 1 centered and flush with the front edge of the platform.

4. Position stack 2 centered and 35 inches from stack 1.

5. Position stack 3 centered and 45 inches from stack 2.

Note: Place the HDDS over stack 3.

6. Position stack 4 centered and 46 inches from stack 3.

7. Position stack 5 centered and flush against the rear of stack 4.

8. Position stack 6 centered and 33 inches to the rear of stack 5.

Figure 2-7. HDDS installed and honeycomb stacks positioned

2-5. Preparing HMMWV

Prepare the HMMWV truck according to FM 10-517/TO 13C7-1-111 with the following exception:

Tie the mirrors and cab bows firmly to the seats. Tie the cab doors against the seat backs.

2-6. Preparing the 3/4-ton M116A2 Trailer

Prepare the 3/4-ton M116A2 trailer according to FM 10-517/TO 13C7-1-111, Figure 8-8 with the following exception:

Drill the 1/2-inch holes in the trailer sideboards 4 inches on center from the end.

2-7. Preparing the Truck Cargo Bed

Prepare the truck cargo bed as shown in Figure 2-8.

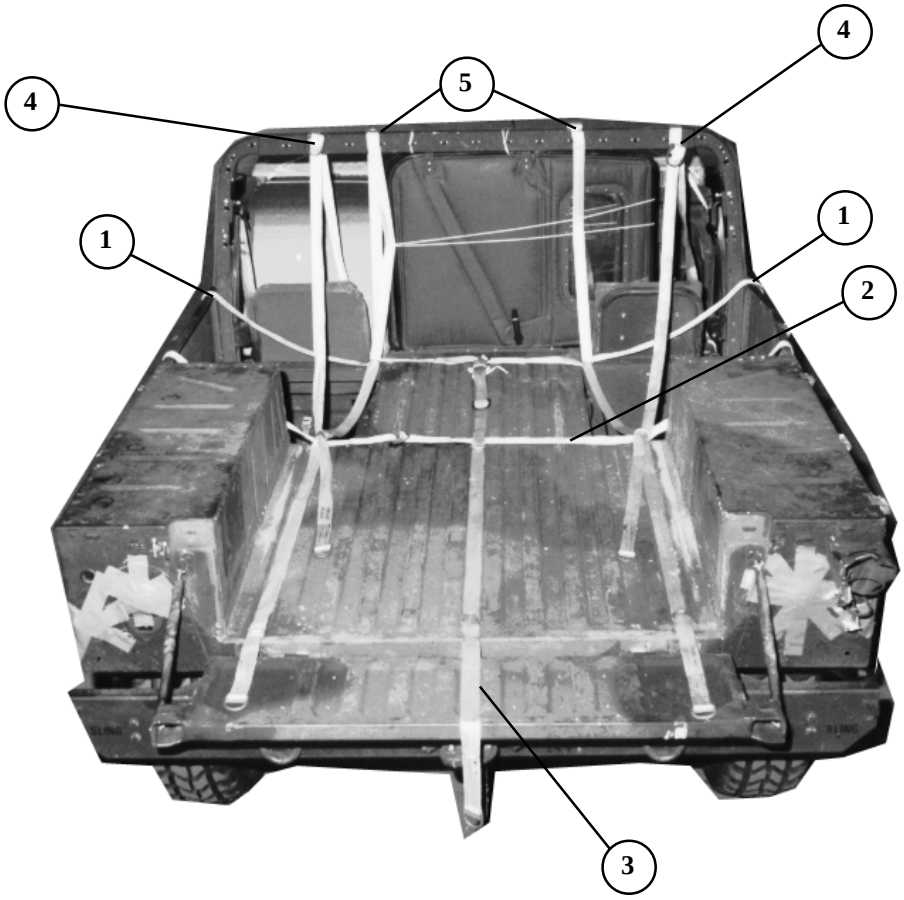

1. Place a 30-foot lashing through the front tie-down rings from side to side.
2. Place a 30-foot lashing through the two outside center tie-down rings from side to side.
3. Place a 15-foot lashing through the two center tie-down rings. Place a D-ring to the free end.
4. Place two lashings, one on each side through the rear and center tie-down rings with their free running ends towards the front of the truck.
5. Place two lashings, one on each side through the front and center tie-down rings with their free running ends towards the front of the truck.

Figure 2-8. Truck cargo bed prepared

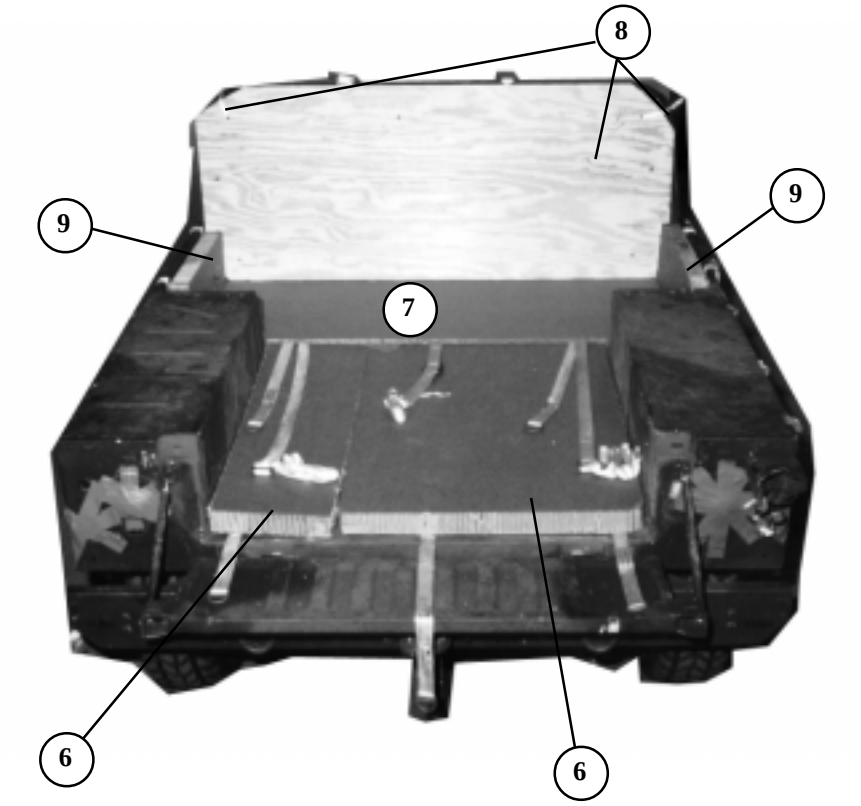

6 Cover the cargo bed to the rear center tie-down rings with a 36- by 52-inch and a 14- by 52-inch piece of honeycomb.

Note: Be sure the 15-foot lashings placed earlier extend under the honeycomb and to the front and rear.

7 Cover the remainder of the cargo bed and lashings with an 81- by 31 1/2-inch piece of honeycomb.

8 Stand a 3/4- by 81- by 34-inch piece of plywood against the front of the cargo bed after beveling the upper corners to conform to the curves of the B-pillar. Drill a 1/2-inch hole 5 inches in from each upper corner. Secure with 1/2-inch tubular nylon.

9 Stand a 31 1/2-inch by 9-inch piece of honeycomb along the bed wall in front of the wheel well on each side.

Figure 2-8. Truck cargo bed prepared (continued)

2-8. Loading the Truck Cargo Bed

Load the truck cargo bed as shown in Figure 2-9.

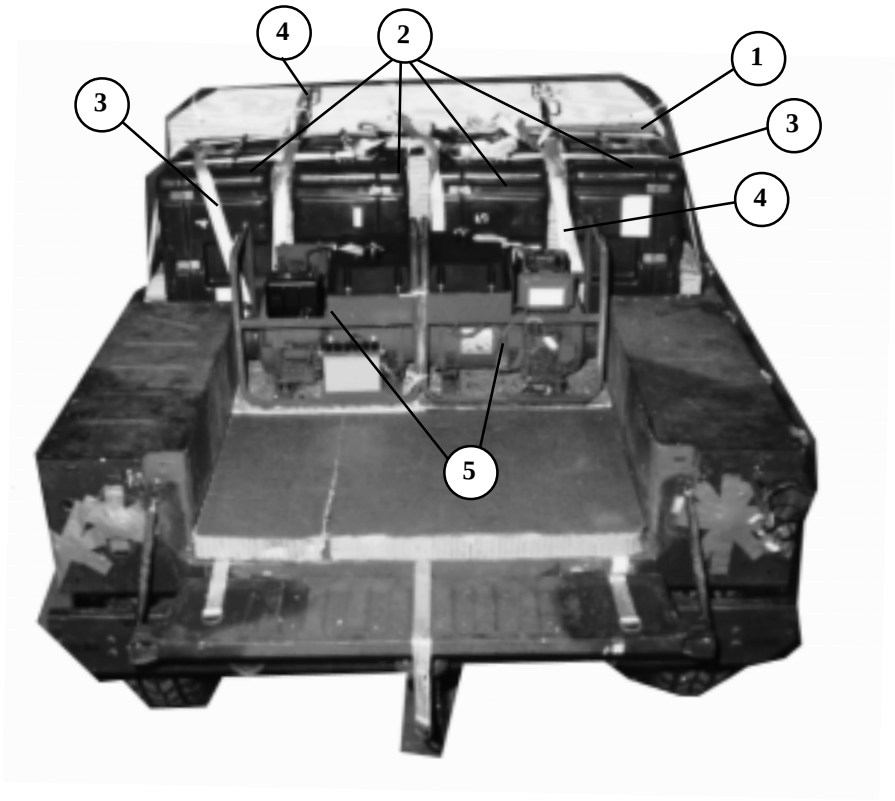

1 Place a 77- by 27 1/2-inch piece of honeycomb on edge in front of the cargo bed.

2 Place the four identically sized hard cases across the front of the cargo bed with three pieces of 26- by 27 1/2-inch honeycomb in between.

Note: Place the cases as shown to ensure proper alignment of handles for lashing.

3 Fasten the 30-foot lashings over boxes, passing them through the box carrying handles.

4 Fasten the 15-foot lashings over the boxes and the plywood at the front of the load.

5 Place two generators, with fuel tanks facing, behind the cases. Pad between the cases and the generators with honeycomb cut to fit. Tie the generator frames together at their corners with type III nylon cord.

Figure 2-9. Truck cargo bed loaded

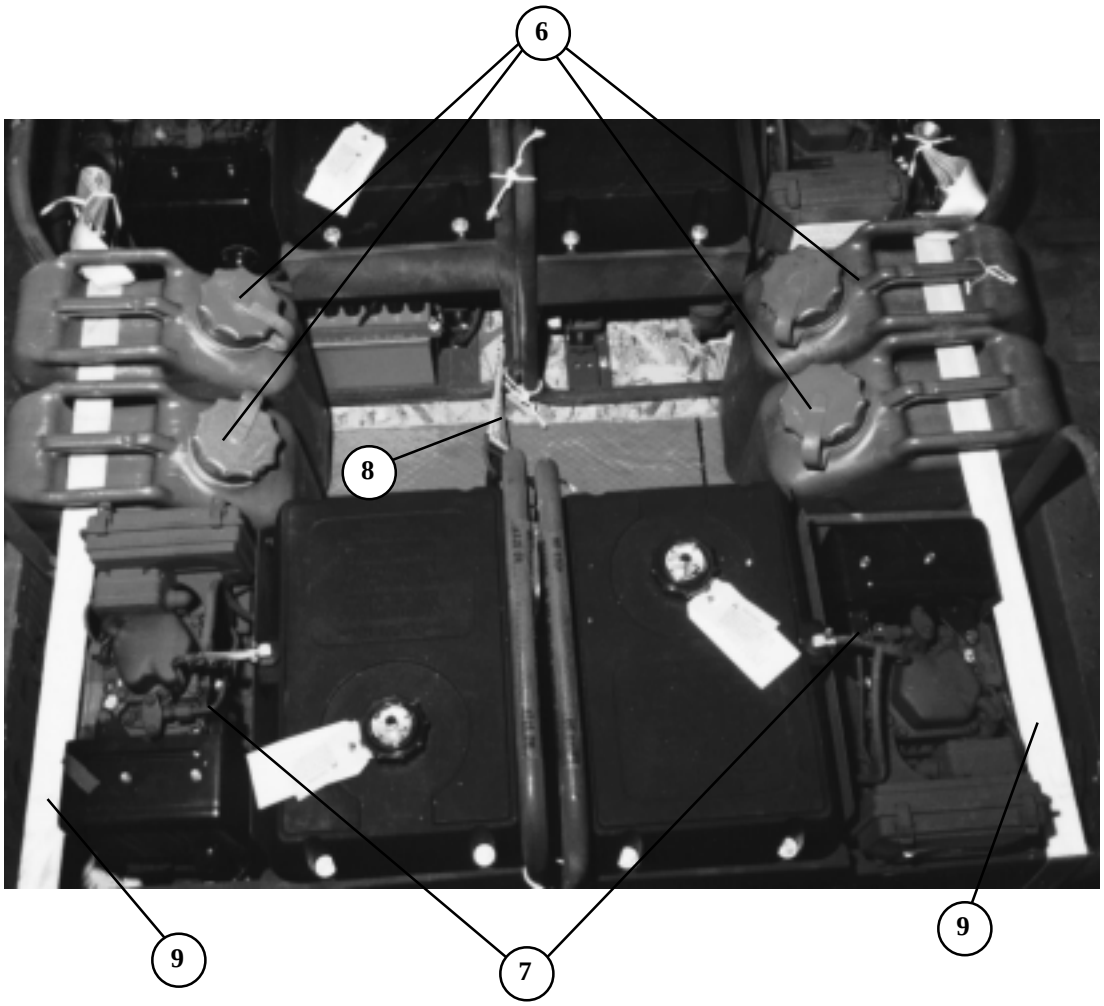

6 Place two fuel cans behind each generator, carrying handles to the outside.

7 Place two more generators behind the fuel cans, facing and tied together as in step 5.

8 Pass the center lashing through the generator frames at the bottom, alternating from one generator to the other. Fasten the lashing with a load binder between the two sets of generators.

9 Pass the two remaining 15-foot lashings over generators and through the can handles. Fasten them just ahead of the rear generators.

Figure 2-9. Truck cargo bed loaded (continued)

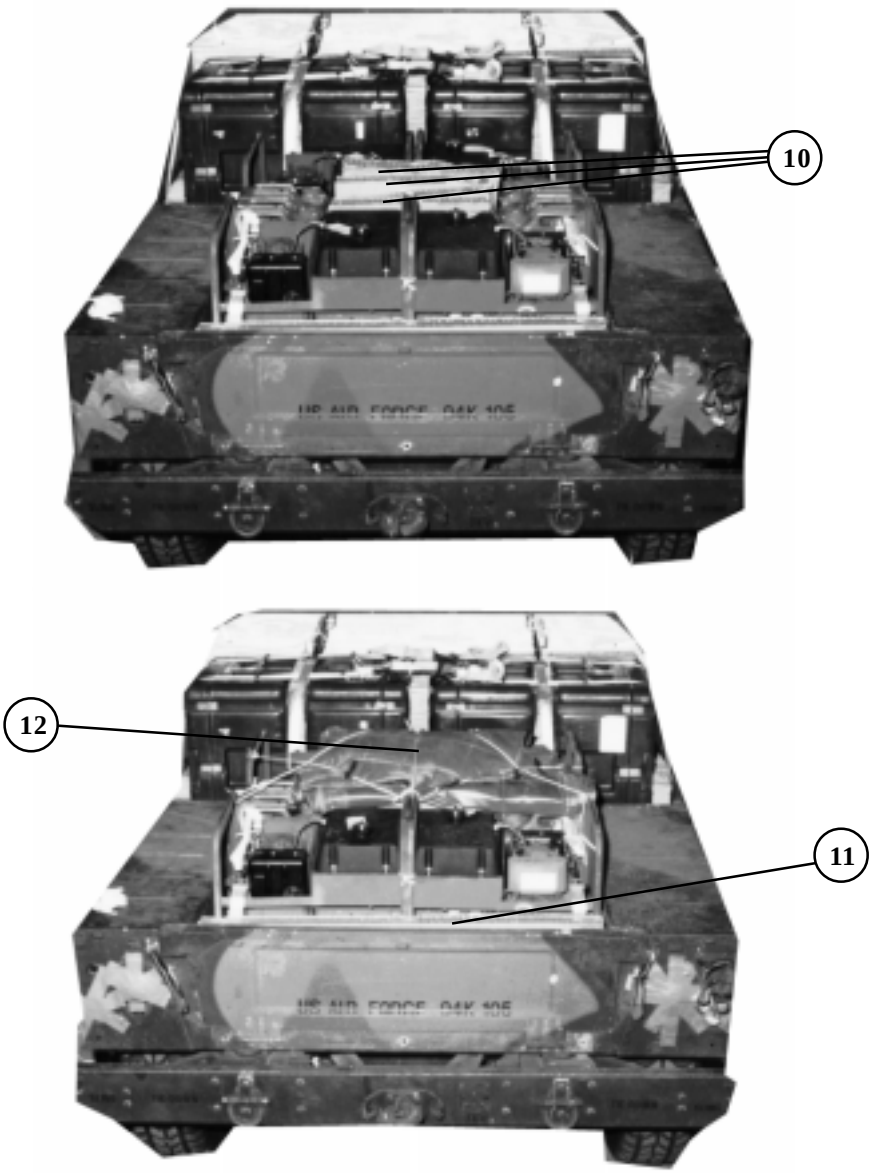

10 Place four 22- by 18-inch pieces of honeycomb between the sets of generators.

11 Place a 51- by 10 1/2-inch piece of honeycomb between the closed tailgate and the generators.

12 Tie the folded canopy cover to the tops of the generator frames with type III nylon cord.

Figure 2-9. Truck cargo bed loaded (continued)

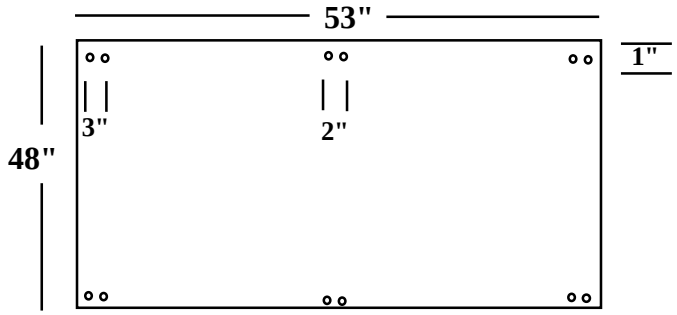

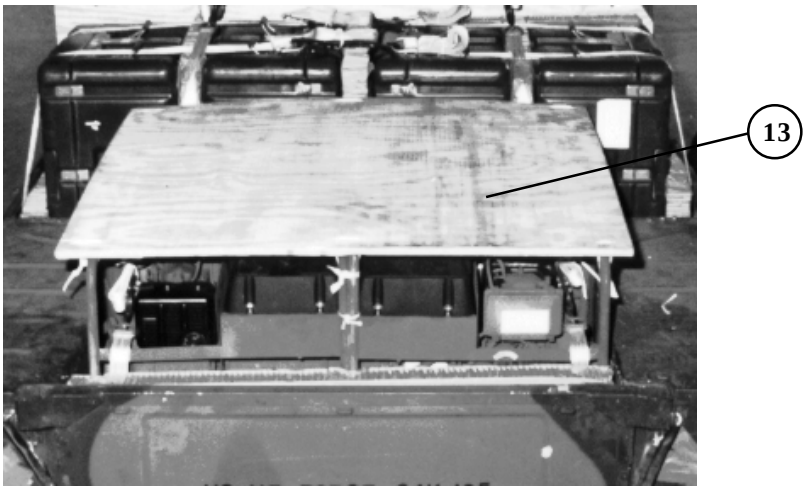

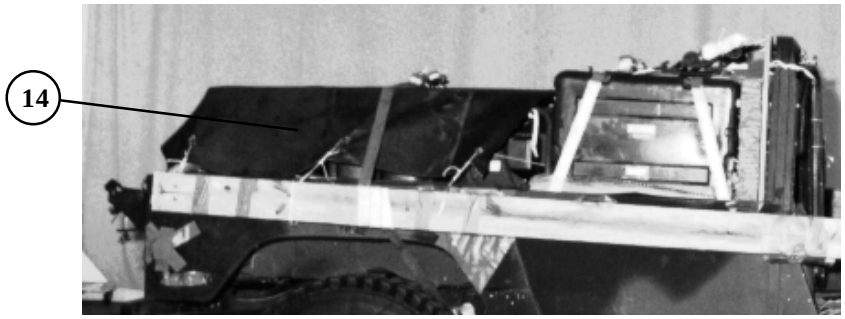

(13) Tie a 3/4- by 48- by 53-inch piece of plywood, with holes drilled as shown above over the generators with 1/2-inch tubular nylon.

(14) Tie a piece of cotton duck cloth, cut to fit over the plywood, to convenient points with type III nylon cord.

Figure 2-9. Truck cargo bed loaded (continued)

2-9. Preparing Trailer Cargo Bed

Prepare the trailer cargo bed as shown in Figure 2-10.

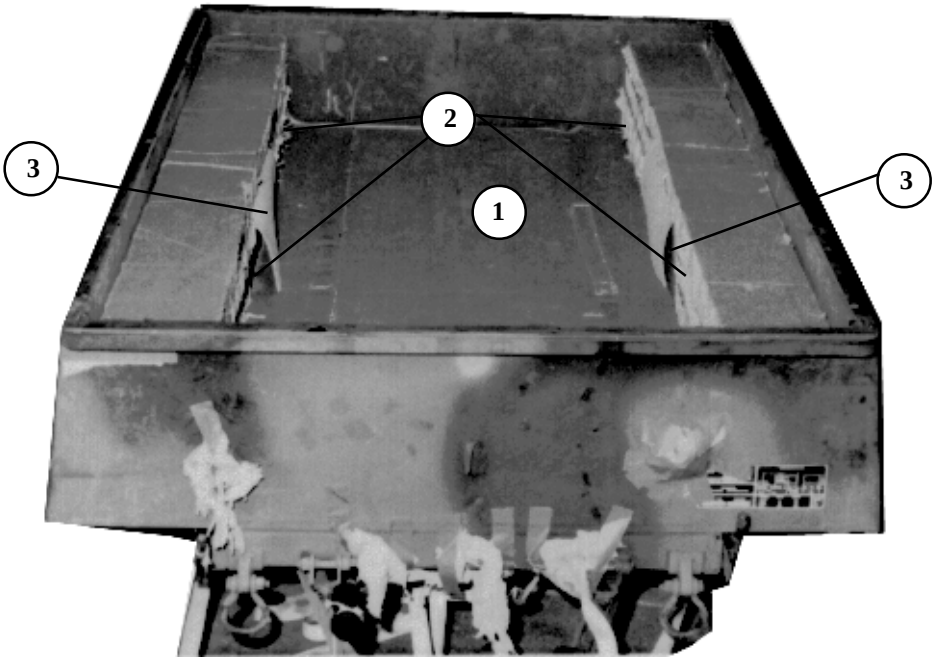

(1) Cover the trailer cargo bed between the wheel wells with a layer of honeycomb.

Note: Piece sizes are not critical.

(2) Completely fill the areas ahead of and behind the wheel wells with honeycomb, up to the top of the well.

(3) Fold a 14- by 24-inch piece of felt over each wheel well.

(4) Cover the honeycomb and wheel well on each side with a piece of honeycomb 10- by 96-inches.(Not shown)

(5) Position two 30-foot lashings on the honeycomb, 6 inches from each wheel well. (Not shown)

Figure 2-10. Trailer cargo bed prepared

2-10. Placing Load in Trailer

Place the load in the trailer as shown in Figure 2-11.

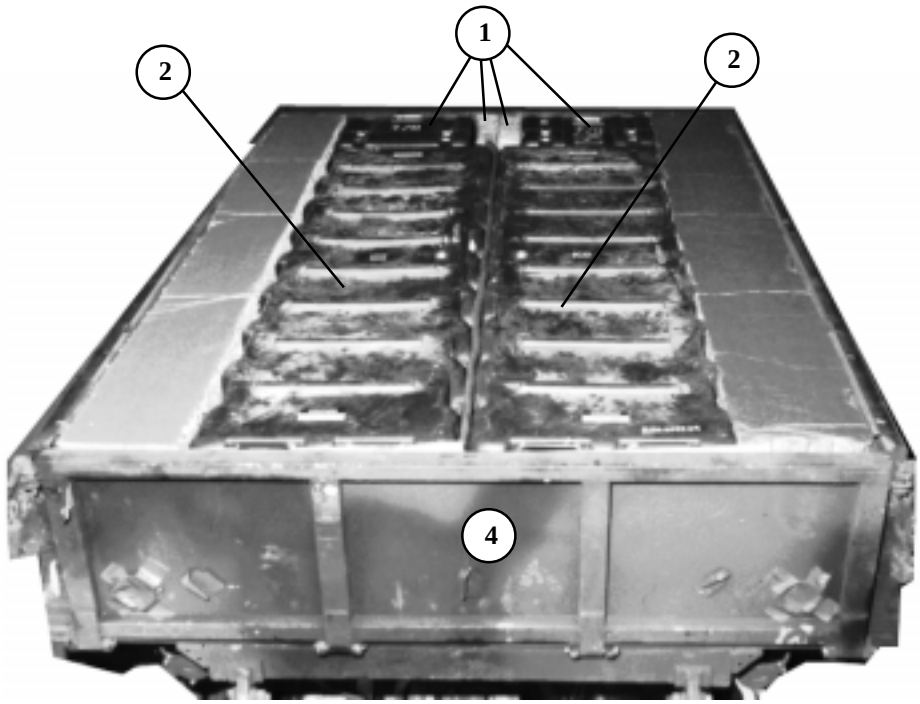

1. Place two CEU battery boxes in the front with two 13- by 15-inch pieces of honeycomb between them. Pad between the boxes and the front trailer wall with felt.
2. Place the two 80- by 15-inch long cases in the remaining space. Pad between them with felt.
3. Fasten the lashings placed earlier over the long cases, passing them through the case handles. (Not shown)
4. Close the tailgate and pad between the tailgate and cases with felt.

Figure 2-11. Load placed in trailer

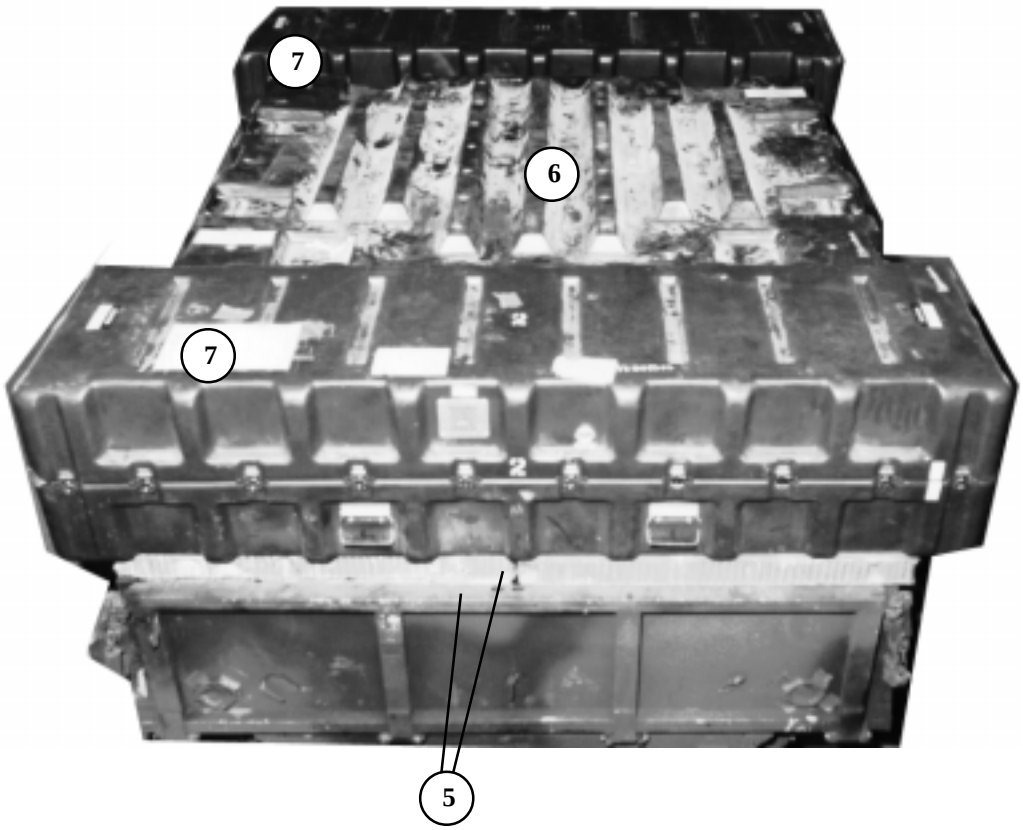

5 Cover the load in the trailer with two full sheets of honeycomb side by side.

6 Center the largest MMLS case on the trailer.

7 Place the two remaining long cases to the front and rear of the large case. Pad between them with felt.

Figure 2-11. Load placed in trailer (continued)

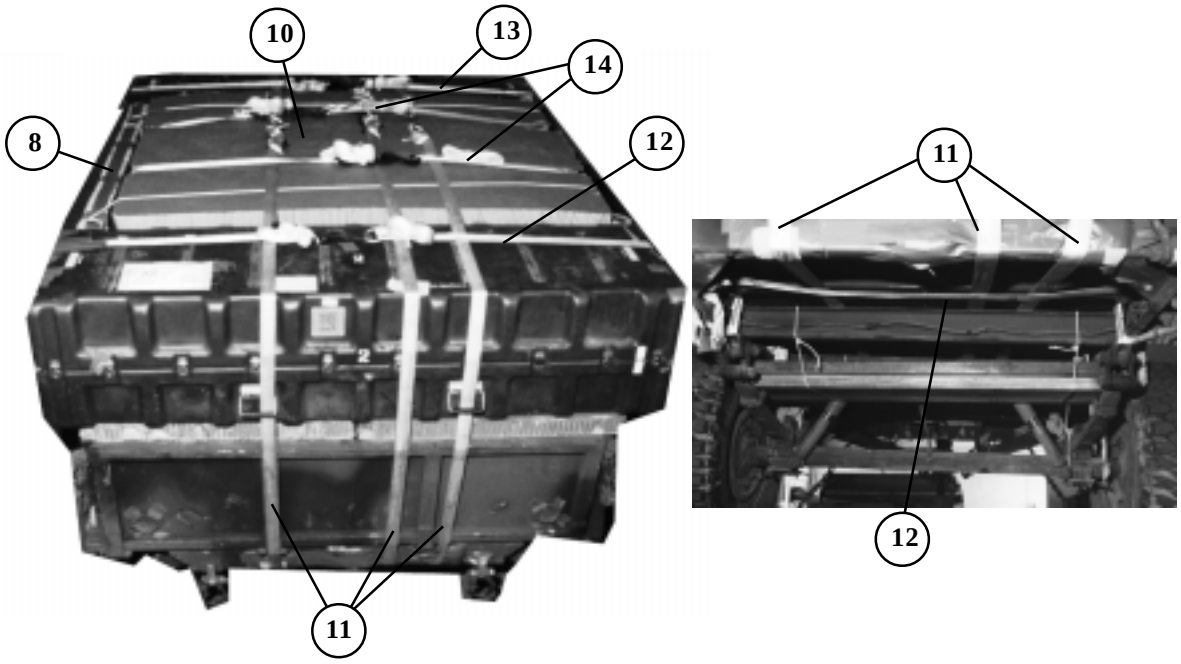

8 Cover two 15- by 53-inch pieces of honeycomb on one side with felt taped in place. Tie them to the large case above the trailer sides with type III nylon cord. Tape all exposed case carrying handles.

9 Tie 55-inch pieces of 2- by 6-inch lumber to the trailer as side boards. Drill one pair of 1/2-inch holes 4 inches from the front ends. Support the side boards against the trailer with three pieces of 6- by 8-inch honeycomb. (Not shown)

10 Cover the middle case with a piece of honeycomb to fit.

11 Pass three lashings lengthwise under the trailer and up through the box carrying handles. Pad all sharp contact points with cellulose wadding. Fasten the lashings on top of the load.

12 Pass a 30-foot lashing around the trailer frame and the side boards and through its own D-ring, 6 to 8 inches from the front of the bed on each side. Fasten the lashings together on top of the load.

13 Attach a 15-foot lashing in the same way 12 inches from the rear edge of the bed on each side. Fasten the lashings together on top of the load.

14 Pass two 30-foot lashings under the trailer bed and frame within the fender well avoiding the hand brake cables. Pass them around the side boards and fasten them on top of the load.

Figure 2-11. Load placed in trailer (continued)

2-11. Placing Truck and Trailer on Platform

Place the truck and trailer on the platform as shown in steps 1 through 6, Figure 8-10, FM 10-517. Tie the trailer stand up with 1/2-inch tubular nylon. Tie the boards together with 1/2-inch tubular nylon as shown in Figure 2-12.

Note: The use of HDDS is optional but recommended.

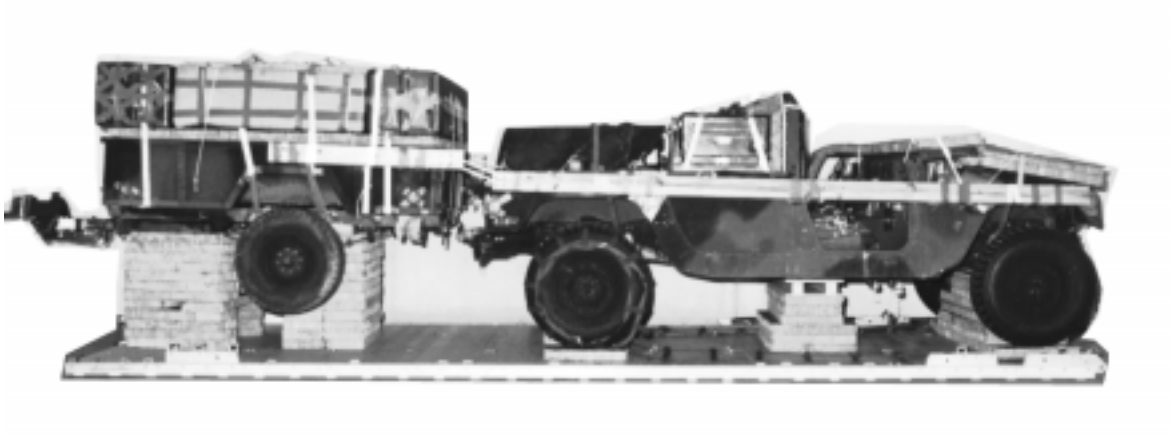

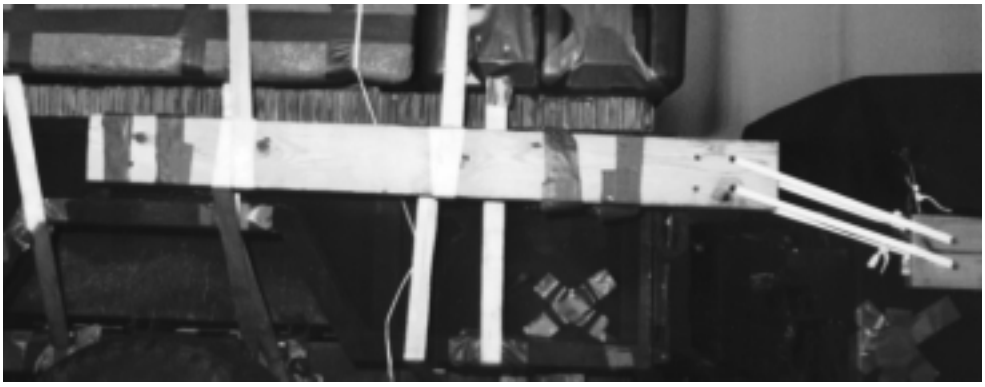

Figure 2-12.Truck and trailer placed on platform

2-12. Lashing Truck and Trailer to Platform

Lash the truck and trailer to the platform as shown in Figure 2-13.

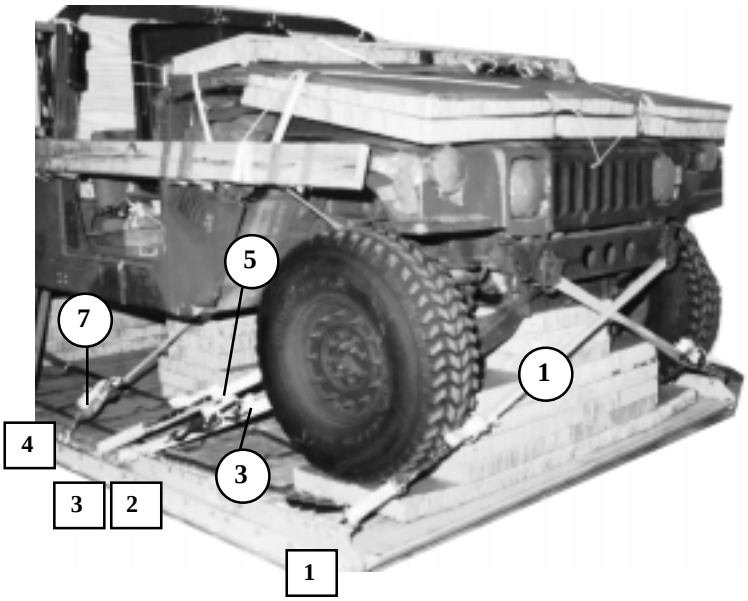

Lashing Number	Tiedown Clevis Number	Instructions
		Pass lashing:
1	1	Through left tie-down on front bumper.
2	1A	Through right tie-down on front bumper.
3	2	Around right front lower control arm.
4	2A	Around left front lower control arm.
5	3	Through tie-down provision in front of right coil spring.
6	3A	Through tie-down provision in front of left coil spring.
7	4	Invert clevis and hook load binder to clevis.
8	4A	Pass lashing through clevis and through its own D-ring. Attach a D-ring to the free end, bring the lashing through the hole in stack 2 and fasten it to the load binder on the right side.

Figure 2-13. Truck and trailer lashed to platform

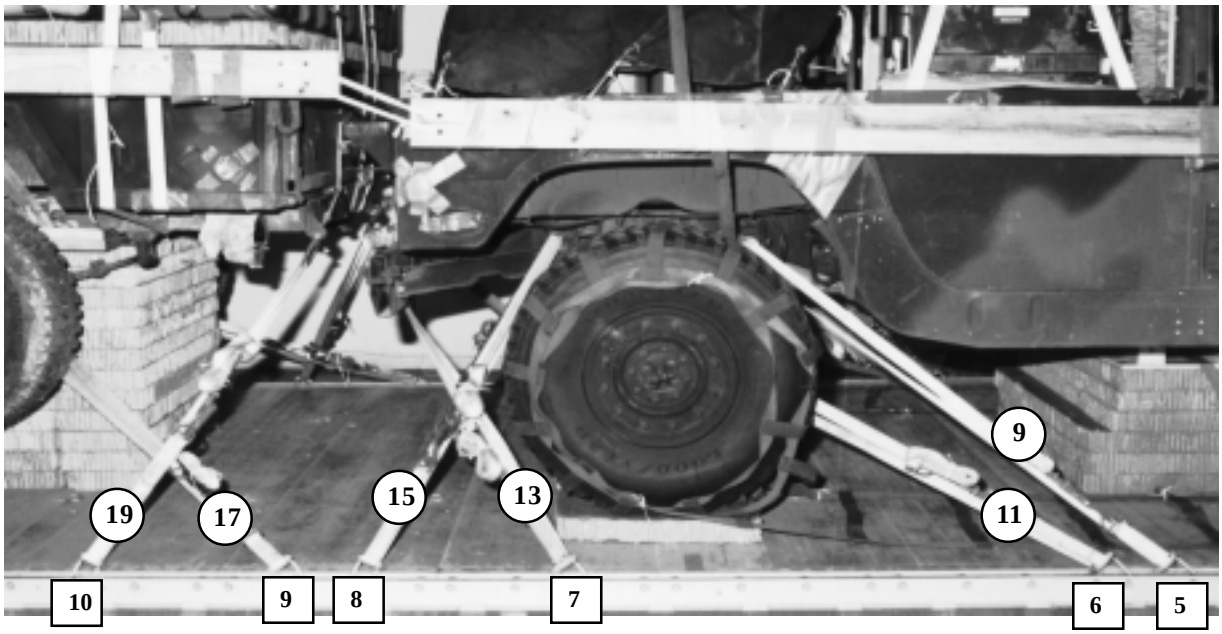

Lashing Number	Tiedown Clevis Number	Instructions
		Pass lashing:
9	5	Through tie-down provision in front of right rear coil spring.
10	5A	Through tie-down provision in front of left rear coil spring.
11	6	Around right rear lower control arm.
12	6A	Around left rear lower control arm.
13	7	Through right tie-down on rear bumper.
14	7A	Through left tie-down on rear bumper.
15	8	Through tie-down provision behind right rear coil spring.
16	8A	Through tie-down provision behind left coil spring.
17	9	Around the trailer axle.
18	9A	Around the trailer axle.
19	10	Through left tie-down provision on rear of trailer.
20	10A	Through right tie-down provision on rear of trailer.

Figure 2-13. Truck and trailer lashed to platform (continued)

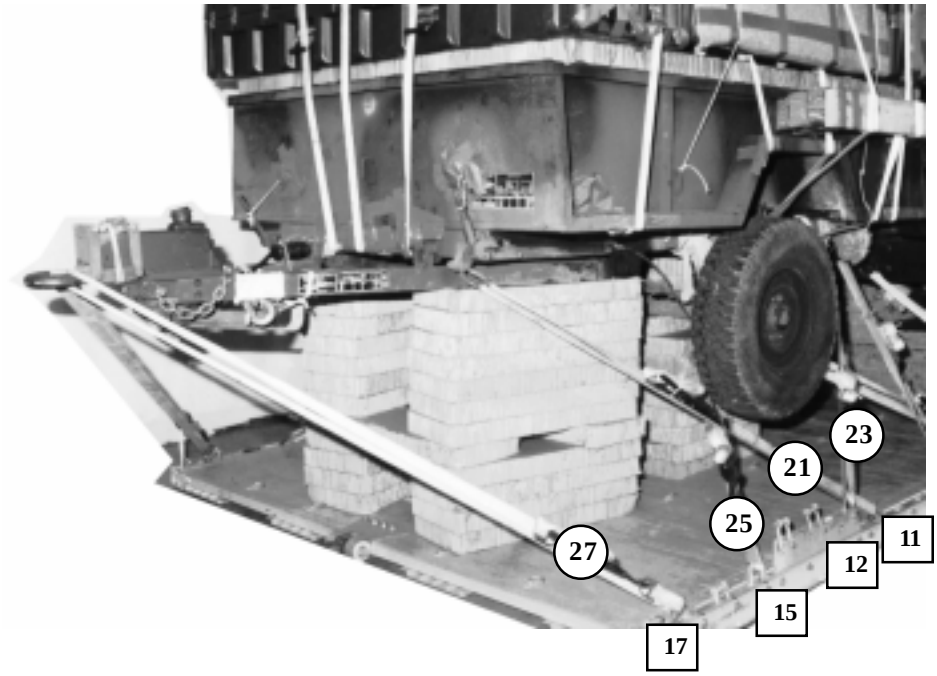

Lashing Number	Tiedown Clevis Number	Instructions
		Pass lashing:
21	11	Through left tie-down provision on front of trailer.
22	11A	Through right tie-down provision on front of trailer.
23	12	Around trailer frame behind leaf spring.
24	12A	Around trailer frame behind leaf spring.
25	15	Around the trailer axle.
26	15A	Around the trailer axle.
27	17	Through lunette.
28	17A	Through lunette.

Figure 2-13. Truck and trailer lashed to platform (continued)

2-13. Installing Suspension Slings and Deadman Tie

Install the suspension slings and deadman tie as shown in Figure 2-14.

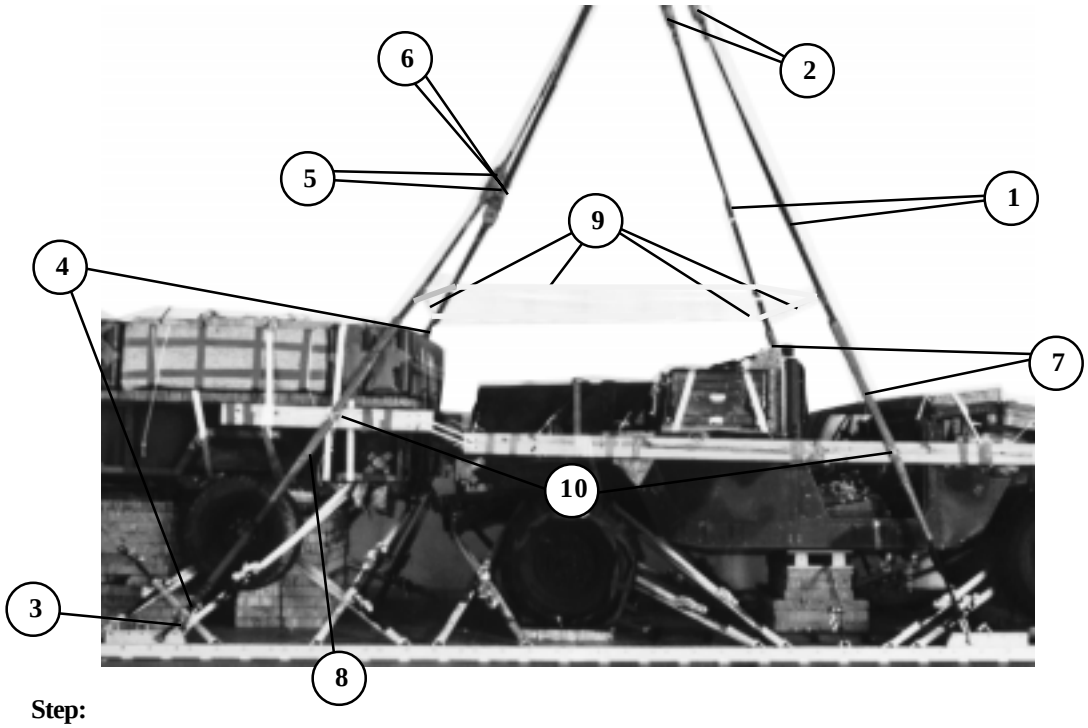

Step:

1. Attach a 16-foot (2-loop), type XXVI nylon sling to each front suspension link with a large clevis.
2. Attach a 3-foot (2-loop), type XXVI nylon sling to each 16-foot sling with a 3 3/4-inch two-point link.
3. Attach a large clevis to each rear suspension link.
4. Attach an 11-foot (2-loop), type XXVI nylon sling to each of these large clevises with an additional large clevis.
5. Attach a 9-foot (2-loop), type XXVI nylon sling to each 11-foot sling with a 5 1/2-inch two-point link.
6. Pad the two-point links with cellulose wadding and tape.
7. Wrap the front suspension slings 21 inches from the clevis with a 6- by 48-inch piece of felt and tape.
8. Wrap the rear suspension slings 33 inches from the clevis with felt as in step 7.
9. Install the deadman tie according to FM 10-500-2/TO 13C7-1-5.
10. Tie the suspension slings to the truck and trailer side boards with type III nylon cord.

Figure 2-14. Suspension slings and deadman tie installed

2-14. Building Parachute Stowage Platform

Build a parachute stowage platform as shown in Figure 2-15.

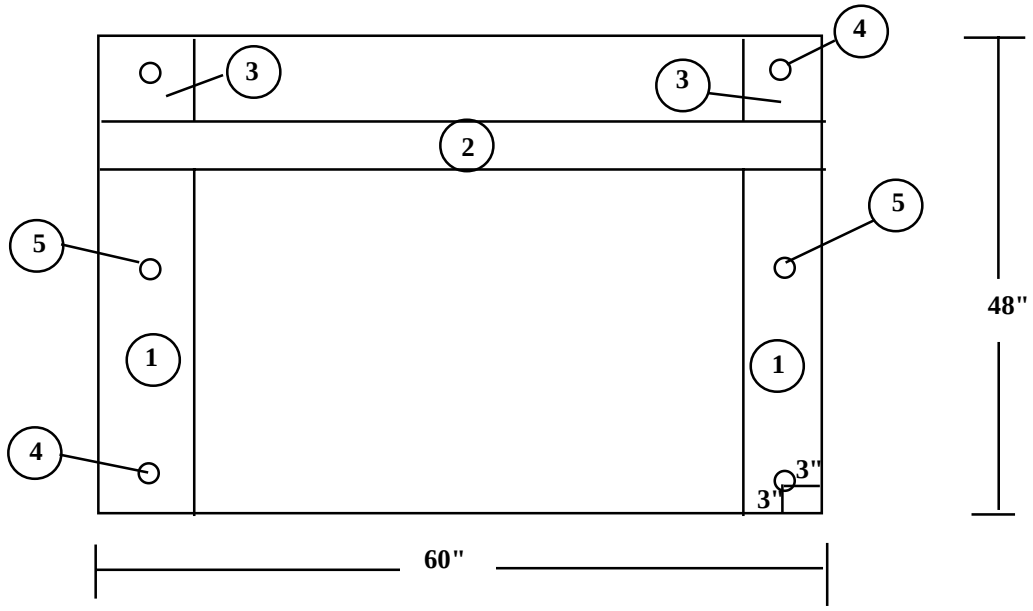

1. Nail a 2- by 6- by 28-inch piece of lumber to each side of a 3/4-by 48- by 60-inch piece of plywood flush with the front end with 8d nails.
2. Nail a 4- by 4- by 60-inch piece of lumber across the plywood flush to the rear of the 2- by 6-inch lumber.
3. Nail a 2- by 6- by 16 1/2-inch piece of lumber flush along each edge of the plywood.
4. Drill a 2-inch hole 3 inches from each corner of the platform and centered in the lumber.
5. Center a 2-inch hole between the corner holes on each side of the platform.

Figure 2-15. Parachute stowage platform built

2-15. Installing Parachute Stowage Platform, Preparing and Stowing Cargo Parachutes

Install the parachute stowage platform on top of the support stacks.
Prepare and stow the cargo parachutes as shown in Figure 2-16.

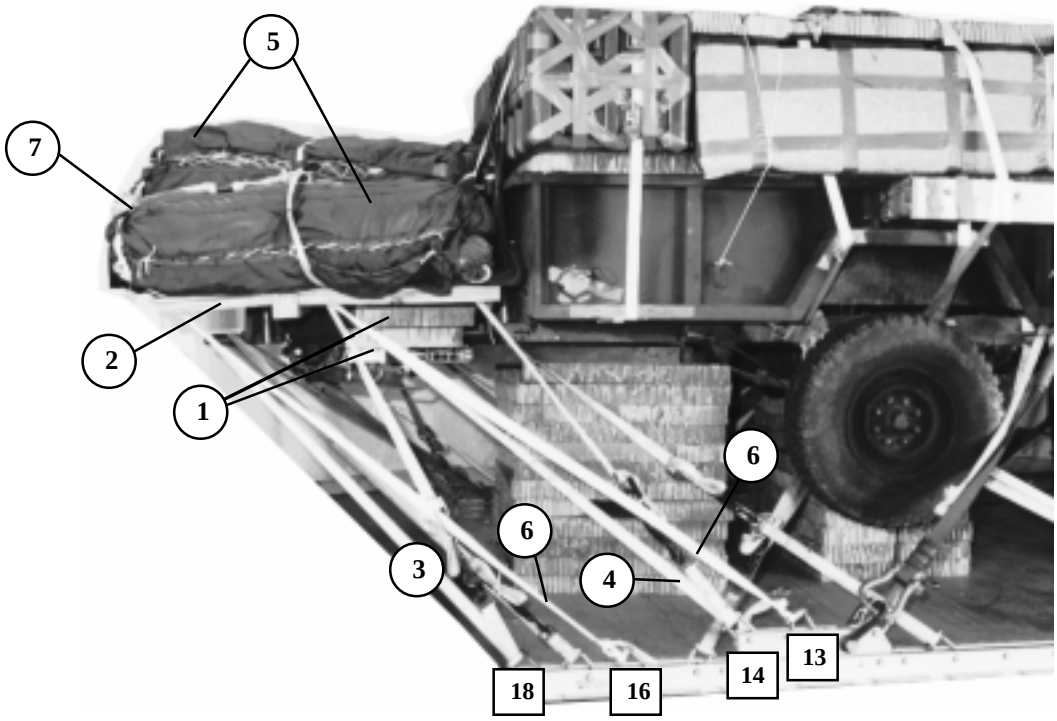

1. Place three 18- by 36-inch pieces of honeycomb on the trailer drawbar for support.
2. Place the platform over the drawbar and honeycomb with the shorter portion to the rear.
3. Lash the two rear and center holes to clevises 18 and 18A.
4. Lash the two front and center holes to clevises 14 and 14A.
5. Install and restrain three G-11 parachutes according to FM 10-500-2/TO 13C7-1-5.
6. Tie the restraint straps to clevises 13 and 13A, and to 16 and 16A.
7. Install the parachute release strap according to FM 10-500-2/TO 13C7-1-5.

Figure 2-16.Parachute stowage platform installed and cargo parachutes prepared and stowed

2-16. Installing Parachute Release

Prepare, attach, and safety an M-1 release according to FM 10-500-2/TO 13C7-1-5 and as shown in Figure 2-17.

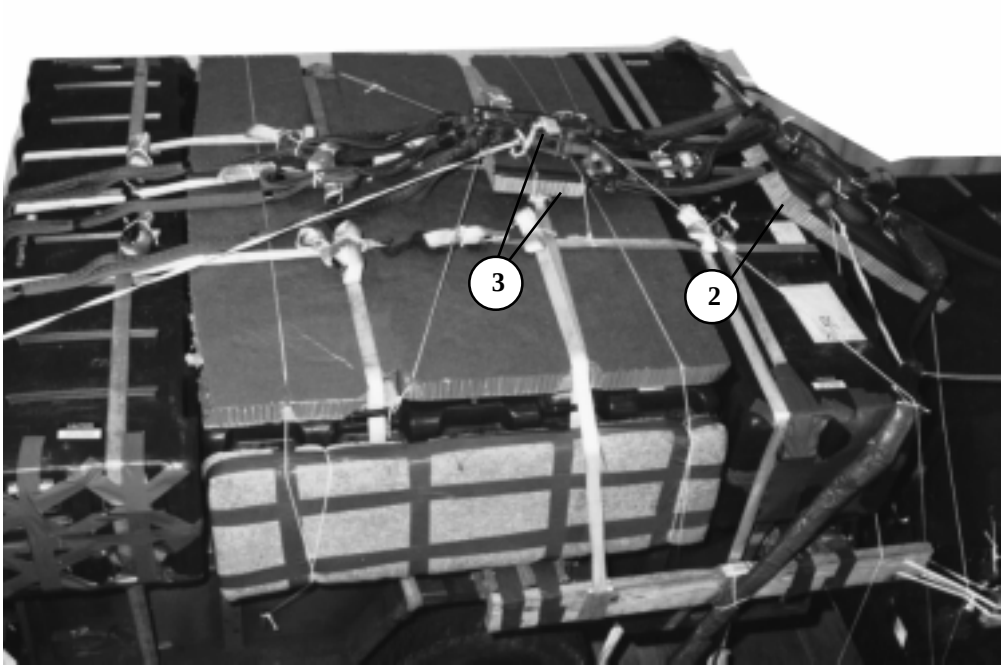

1. Safety the front suspension slings to the truck B-pillar (roll bar). (Not shown)
2. Center a 26- by 36-inch piece of honeycomb between the truck and the trailer and tie it to convenient points with type III nylon cord. Rest the 2-point links on the honeycomb.
3. Place the M-1 release on an 18- by 12-inch of honeycomb. Tie it to convenient points with type III nylon cord. Connect the riser extensions and suspension slings according to FM 10-500-2/TO 13C7-1-5.

Figure 2-17. M-1 cargo parachute release installed

2-17. Installing Extraction System

Install the EFTC as shown in Figure 2-18.

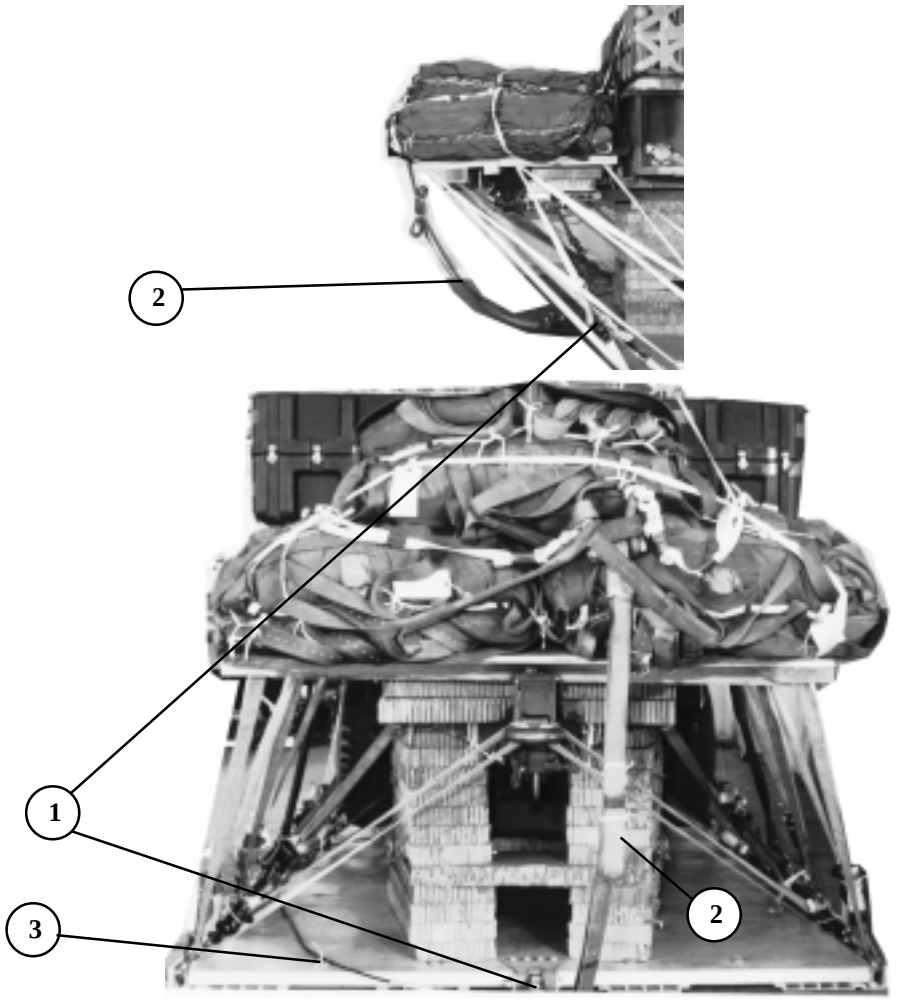

1 Install the components of the EFTC according to FM 10-500-2/TO 13C7-1-5. Use the rear mounting holes for the EFTC bracket.

2 Attach a 9-foot (2-loop), type XXVI nylon sling to be used as a deployment line.

3 Use a 20-foot EFTC cable and safety the cable to tiedown ring D8 using one turn of type I, 1/4-inch cotton webbing.

Figure 2-18. Extraction system installed

2-18. Placing Extraction Parachute

Select the extraction parachute and extraction line needed using the extraction line requirements table in FM 10-500-2/TO 13C7-1-5. Place the extraction line on the load for installation in the aircraft.

2-19. Installing Provisions for Emergency Restraints

Select and install the provisions for the emergency aft restraints according to the emergency aft restraint requirements table in FM 10-500-2/TO 13C7-1-5.

2-20. Marking Rigged Load

Mark the rigged load according to FM 10-500-2/TO 13C7-1-5 and as shown in Figure 2-19. Complete Shipper's Declaration for Dangerous Goods and affix to load. If the load varies from the one shown, the weight, height, CB, tip off curve, and parachute requirements must be recomputed.

2-21. Equipment Required

Use the equipment listed in Table 2-1 to rig the load shown in Figure 2-19.

CAUTION
Make the final rigger inspection required by FM 10-500-2/TO 13C7-1-5 before the load leaves the rigging site.

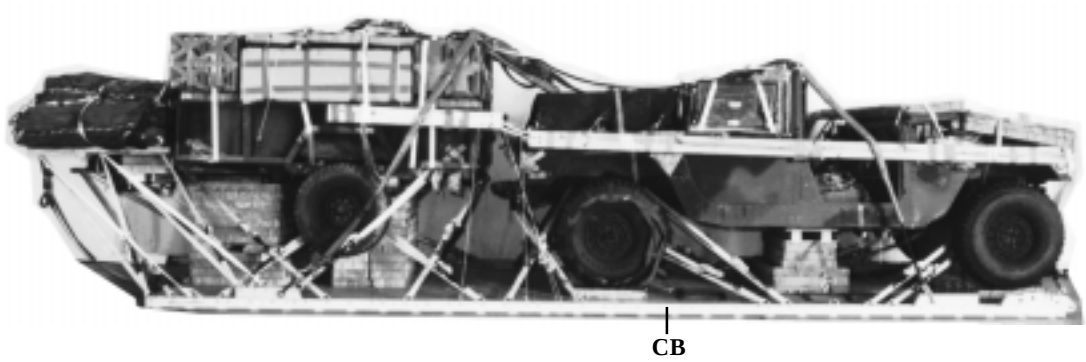

RIGGED LOAD DATA

Weight.....13,289 pounds

Height.....99 inches

Width.....108 inches

Length.....338 inches

Overhang: Front.....5 inches

Rear.....45 inches

Center of Balance (CB)
(from front edge of the platform).....140 inches

Extraction System.....EFTC

Figure 2-19. MMLS in an M998 HMMWV and a 3/4-ton trailer rigged on a 24-foot type V platform for low-velocity airdrop

Table 2-1. Equipment required for rigging the MMLS in an M998 HMMWV and a 3/4-ton trailer rigged on a 24-foot, type V airdrop platform for low-velocity airdrop

National Stock Number	Item	
8040-00-273-8713	Adhesive, paste, 1-gal.	As required
1670-01-035-6054	Bridle (for line bag)	1
	Clevis, suspension:	
4030-00-090-5354	1-in (large)	7
4030-00-678-8562	3/4-in (medium)	6
8305-00-242-3593	Cloth, cotton duck, 60-in	As required
4020-00-240-2146	Cord, nylon, type III, 550-lb.	As required
1670-00-434-5787	Coupling, airdrop extraction force transfer cable, 20-ft	1
	Cover:	
1670-00-360-0328	Clevis, large	3
1670-00-360-0329	Link, type IV	3
8135-00-664-6958	Cushioning material, packaging, cellulose wadding	As required
8305-00-958-3685	Felt, 1/2-in thick	As required
1670-01-183-2678	Leaf, extraction line (line bag)	3
	Line extraction:	
1670-01-062-6313	60-ft (3-loop), type XXVI (C-130)	1
1670-01-107-7651	140-ft (3-loop), type XXVI (for C-141,C-5 or C-17)	1
1670-01-064-4452	60-ft (1-loop), type XXVI with towplate link (for C-17) Drogue Line	1
	Link assembly:	
1670-00-783-5988	Type IV	6
	Two-point:	
5306-00-435-8994	Bolt, 1-in diam, 4-in long	2
5310-00-232-5165	Nut, 1-in, hexagonal	2
1670-00-003-1953	Plate, side, 3 3/4-in	2
5365-00-007-3414	Spacer, large	2
5315-00-010-4659	Nail, steel wire, 8d	As required
1670-00-753-3928	Pad, energy-dissipating, (honeycomb),	
	3- by 36- by 96-in:	27 sheets
	Parachute, cargo	
1670-01-016-7841	G-11B	3
	Parachute, cargo extraction	
1670-01-063-3716	22-ft	1
	Drogue (for C-17)	
1670-01-063-3715	15-ft	1
	Platform, airdrop, type V, 24-ft:	1
1670-01-162-2372	Clevis, assembly (type V)	(30)
1670-01-353-8424	Extraction bracket assembly	(1)
1670-01-353-8425	Bracket assembly, coupling	(1)
1670-01-247-2389	Suspension link	(2)
1670-01-162-2381	Tandem link assembly (Multipurpose link)	(2)
	Lumber:	
5510-00-220-6146	2- by 4- by:	As required
5510-00-220-6274	4- by 4- by:	As required
5510-00-220-6148	2- by 6- by:	As required
5530-00-128-4981	Plywood, 3/4-in:	4 sheets

Table 2-1. Equipment required for rigging the MMLS in an M998 HMMWV and a 3/4-ton trailer rigged on a 24-foot, type V airdrop platform for low-velocity airdrop (continued)

National Stock Number	Item	Quantity
1670-01-097-8816	Release, cargo parachute, M-1	1
	Sling, cargo, airdrop:	
	For suspension:	
5340-01-062-7761	16-ft (2-loop), type XXVI	2
1670-01-062-6301	3ft (2-loop), type XXVI	2
1670-01-062-6304	9-ft (2-loop), type XXVI	2
1670-01-063-7760	11-ft (2-loop), type XXVI	2
	For lifting:	
1670-01-062-6304	9-ft (2-loop), type XXVI	2
1670-01-062-6303	12-ft (2-loop), type XXVI	2
	For deployment:	
1670-01-062-6304	9-ft (2-loop), type XXVI	1
	For riser extension:	
1670-01-062-6302	20-ft (2-loop), type XXVI	6
1670-00-040-8219	Strap, parachute release, multi-cut, comes with 3 knives	2
7501-00-266-5016	Tape, adhesive, 2-in	As required
1670-01-344-0825	Vehicle drive-off aid (HDDS)	1
1670-00-937-0271	Tiedown assembly, 15-ft	36
	Webbing:	
8305-00-268-2411	Cotton, 1/4-inch, type I	As required
8305-00-082-5752	Nylon, tubular 1/2-in	As required
8305-00-263-3591	Type VIII	As required

CHAPTER 3

RIGGING THE STANDARD INTERGRADED COMMAND POST SYSTEM (SICPS) WITH THE COMMON HARDWARE/SOFTWARE 2ND GENERATION PACKAGE (CHS-2) ON A 20-FOOT, TYPE V PLATFORM FOR LOW-VELOCITY AIRDROP

3-1. Description of Load

The Standard Intergraded Command Post System (SICPS) and the Common Hardware/Software 2nd Generation Package (CHS-2) are rigged on a 20-foot, type V airdrop platform with three G-11 cargo parachutes. The rigged weight of this load as shown is 12,100 pounds. The load (Figure 3-1) has a full CHS-2 package. If all of the package is not needed or available, the space can be filled with honeycomb where that item would have been positioned on the platform. The SICPS uses the MK 2727/G Soft Top Installation Kit (STIK) with an AB 1386 antenna mast mounted on the front of the Cargo/Troop Carrier. The preparation of the STIK is outlined in C4, FM 10-517/TO 13C7-1-111. This load does not require the additional 300 pounds of ballast. The CHS-2 as a full package contains the following equipment:

--1 each Laser Printer (LP) 155 pounds
--1 each Character Graphic Printer #1 (CGP) 60 pounds
--2 each Color Monitor Display #1and #2 (CMD) 155 pounds each
--1 each High Capacity Unit (HCU) 98 pounds
--1 each Transportable Computer Unit (TCU) 98 pounds
--2 each Uninterrupted Power Supply #1 and #2 (UPS) 155 pounds each

The weights include the storage cases. The center of balance of this load has been figured to compensate for any items not rigged with this load so additional ballast is not required.

Figure 3-1. The Standard Intergraded Command Post System (SICPS) and the Common Hardware/Software 2nd Generation Package (CHS-2)

3-2. Preparing Platform

Prepare a 20-foot, type V airdrop platform as shown in Figure 3-2.

NOTES:
1. The nose bumper may or may not be installed.
2. Measurements given in this load are from the front edge of the platform, NOT from the front edge of the nose bumper.

Step:

1. Inspect, or assemble and inspect, a 20-foot, type V airdrop platform as outlined in TM 10-1670-268-20&P/TO 13C7-52-22.
2. Install suspension links to the right and left platform side rails using holes 29, 30, and 31.
3. Install a tandem link to the rear of each platform side rails using holes 38, 39, and 40.
4. Install a tandem link to the front of each platform side rail using holes 1, 2, and 3.
5. Install clevises on bushings 1and 3 of each forward tandem link.
6. Install clevises on bushings 2 and 3 on the suspension links.
7. Install clevises on bushings 1and 3, and two clevises on bushing 4 of each rear tandem link.
8. Starting at the front of each platform side rail, install clevises on the bushings bolted to holes 14, 15, 16, 19, 21, 32, 33, 34, 35, 36, and 37.
9. Starting at the front of the platform, number the clevises 1 through 19 on the right side, and 1A through 19A on the left side.
10. Label the tie-down rings according to FM 10-500-2/TO 13C7-1-5.

Figure 3-2. Platform prepared

3-3. Building and Positioning the Honeycomb Stacks for the SICPS

Build the honeycomb stacks for the SCIPS as shown in Chapter 2, Figures 2-2 through 2-4 of this manual. Place the honeycomb stacks for the SICPS as shown in Figure 3-3.

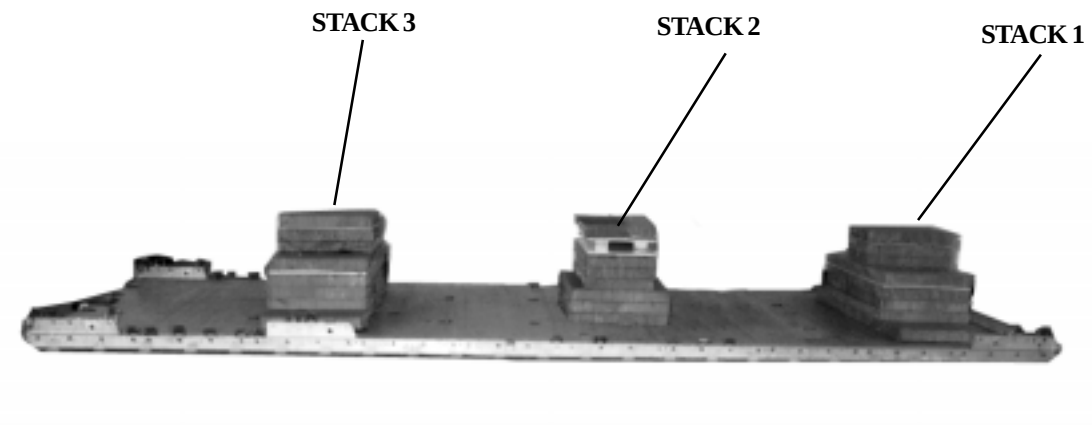

Step:

1. Position stack 1 centered 17 inches from the front edge of the platform.

2. Position stack 2 centered 45 inches from stack 1 with the cut out of the top piece of honeycomb pointing towards the front of the vehicle and the rear of the platform. The crossmember of the vehicle must set centered on top of the 43-inch width of the top piece of honeycomb and the left and right sides of the frame must set on the sides of the top piece of honeycomb.

3. Position stack 3 centered and 35 inches from stack 2.

Figure 3-3. Stacks 1, 2, and 3 for the SICPS placed

3-4. Building and Positioning the Honeycomb Stacks for the CHS-2

Build and position the honeycomb stacks for the CHS-2 as shown in Figure 3-4.

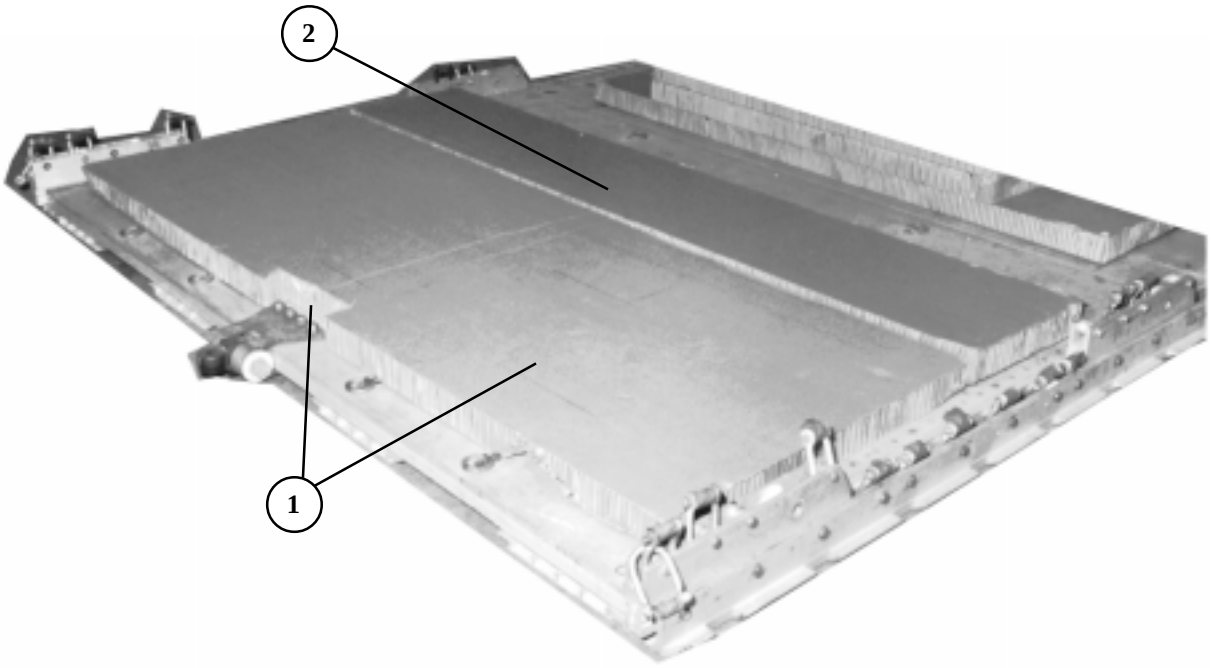

1 Place a 96- by 36-inch piece of honeycomb centered even with the forward side of the four rear deck rings. Make a cutout on the rear edge of the honeycomb to accommodate the extraction bracket assembly.

2 Place a 96- by 18-inch piece of honeycomb centered next to the first piece to form a 96- by 54-inch layer.

Figure 3-4. Honeycomb stacks for the CHS-2 built and positioned

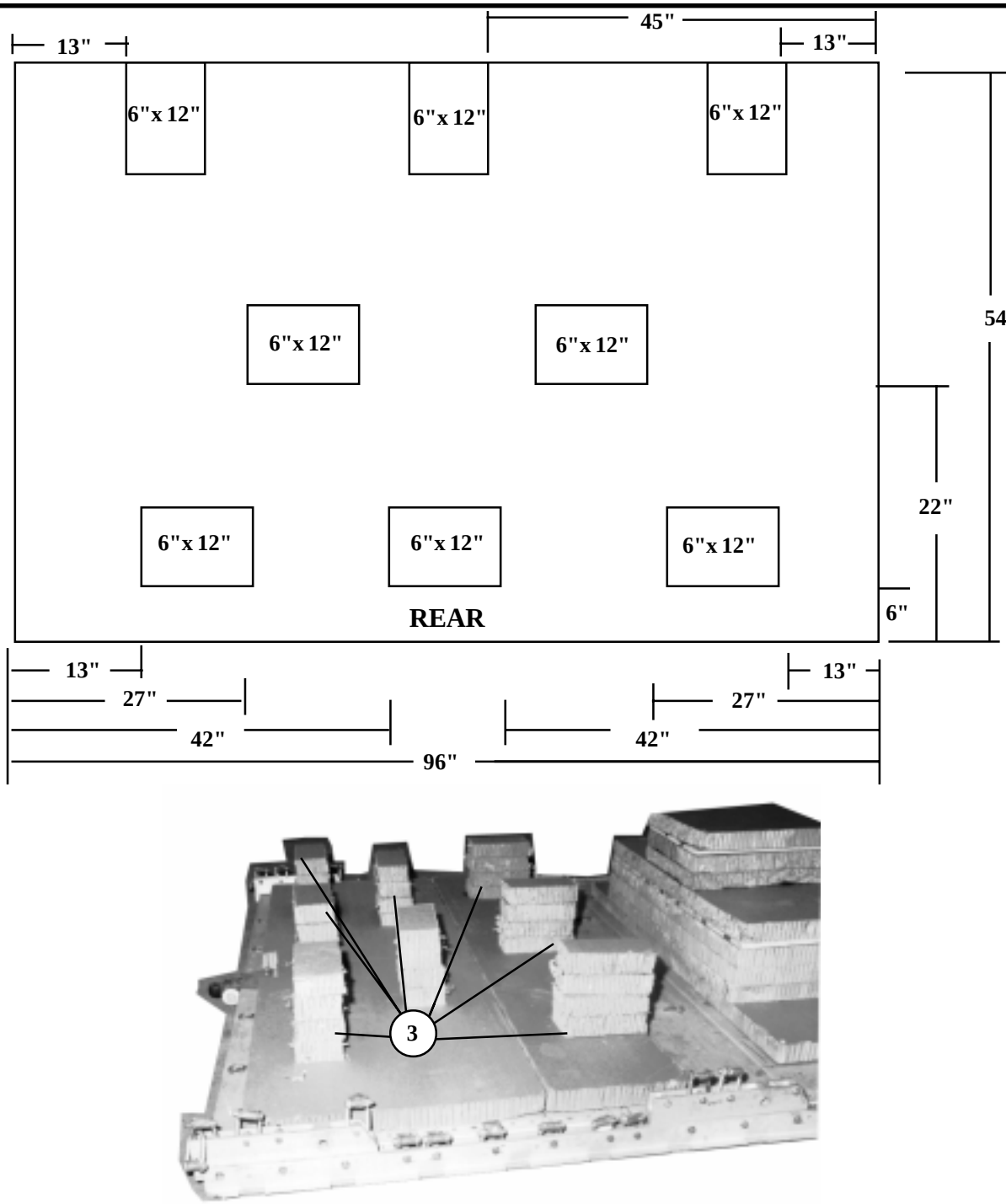

3 Cut 32 pieces of 12- by 6-inch honeycomb and form eight stacks with four pieces in each stack. Position the stacks on the honeycomb as shown above.

Figure 3-4. Honeycomb stacks for the CHS-2 built and positioned (continued)

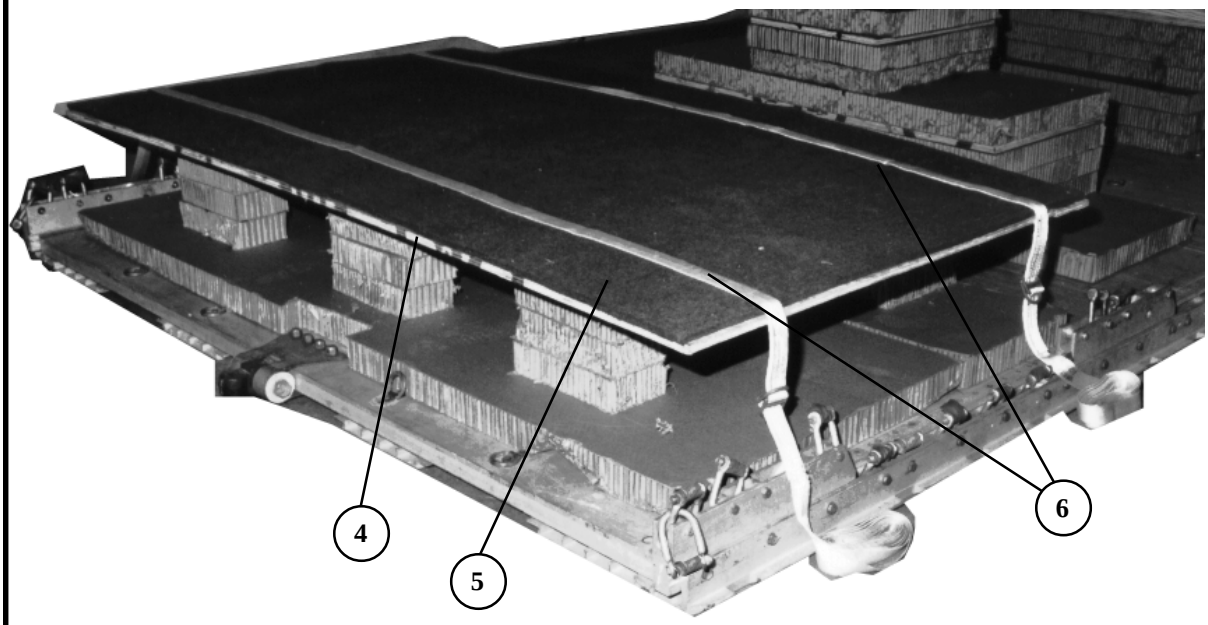

4 Place a spliced layer of 3/4- by 96- by 48-inch and a 3/4- by 96- by 6-inch plywood centered on top of the honeycomb stacks.

5 Place a layer of 1/2- by 96- by 54-inch felt centered on top of the plywood.

6 Preposition two 30-foot lashings on top of the felt. Place one lashing 6 inches from the rear edge of the plywood with the joined D-rings 6 inches off the right edge of the plywood. Place the second lashing 6 inches from the forward edge of the plywood with the joined D-ring 6 inches off the right edge of the plywood.

Figure 3-4. Honeycomb stacks for the CHS-2 built and positioned (continued)

3-5. Rigging the SICPS in the M1097 HMMWV

Use the following procedures to rig the components of the SICPS which include the MK2727/G Soft Top Installation Kit (STIK), the accompanying load and the M1097 HMMWV. The procedures used to prepare the HMMWV with the windshield down are outlined in FM 10-517/TO 13C7-1-111 . Follow the basic preparation for the STIK with changes to accommodate the SCIPS equipment and accompanying load. Rig the load as shown in Figure 3-5.

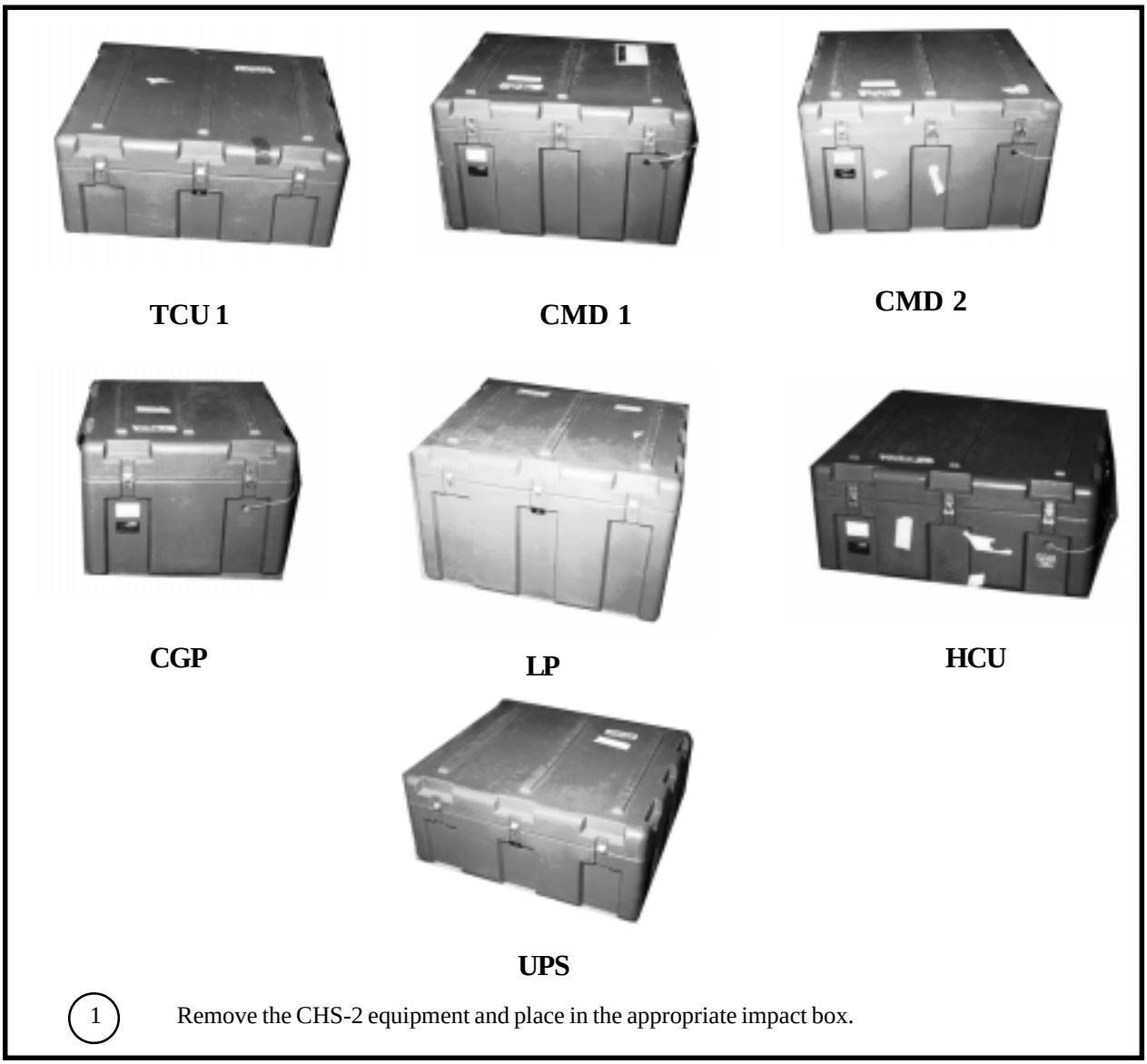

1 Remove the CHS-2 equipment and place in the appropriate impact box.

Figure 3-5. SICPS rigged in the M1097 HMMWV

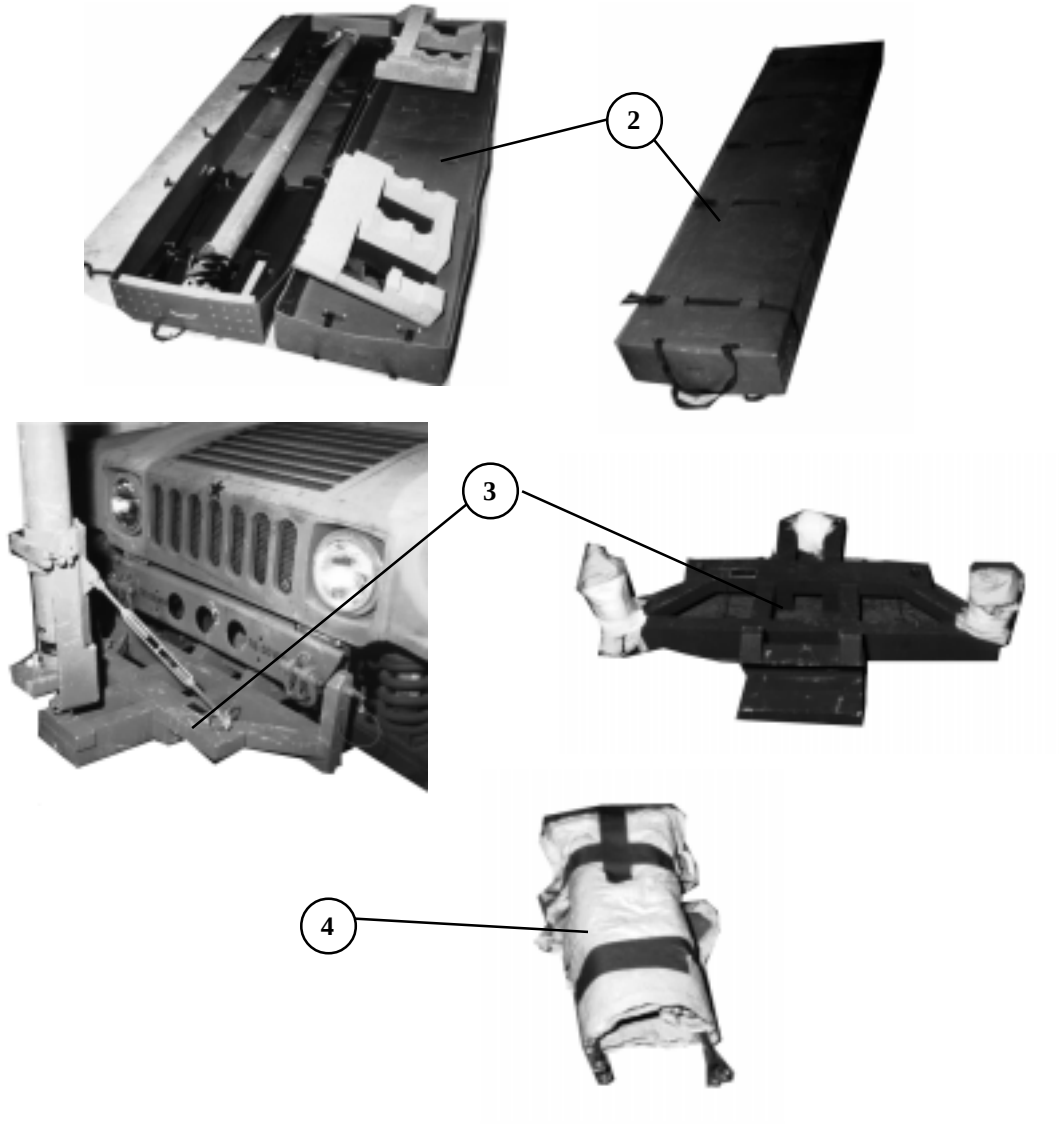

2 Remove the AB 1386 Antenna Mast and secure it in the storage container.

3 Remove the antenna mount from the HMMWV and pad the connector ends.

4 Remove mast adapter and replace securing pins on the HMMWV. Wrap the adapter in cellulose.

5 Remove the foward antenna mounts and cross bracket. Remove the antenna mounts frrom the cross bracket and reinstall the bolts into the cross bracket and truck sides. (Not shown)

Figure 3-5. SICPS rigged in the M1097 HMMWV (continued)

6 Remove the light set by disconnecting the power plug to the light set. Remove the velcro strapping and then secure the velcro. Place the light set in the transit case. Leave the cable attached to the light bow. Pad and tape the cable ends. (Not shown)

7 Loosen exterior canvas hooks and velcro on the canvas top. (Not shown)

8 Undo canvas fasteners from the cab area. (Not shown)

9 Remove the canvas top and white liner. Roll the canvas top with the white liner inside towards the front of the truck and remove. (Not shown)

10 Remove the fire extinguisher and store it inside the roadside bin. Remove the fire extinguisher mounting brackets and store them in the inside curbside storage bin. (Not shown)

11 Remove the cab cover, doors and bows. Store the cover in the exterior curbside storage bin. (Not shown)

12 Remove the cables from the PCM and pad the cable ends. PCM. Leave the cables in place. (Not shown)

13 Remove the PCM from the right side guard. Remove the bracket from the back of the PCM and store it in the inside curbside storage bin. Tape thumbscrews to the PCM. Reinstall all the other screws on the PCM and wrap it in cellulose. (Not shown)

14 Remove the cables from the WSDM. Pad the cable ends and leave the cables in place. (Not shown)

15 Remove the WSDM from the rack. Remove the holding bracket from the back of the WSDM. Wrap the WSDM in cellulose and store it in the inside roadside storage bin. Wrap the holding bracket in cellulose and store it in the inside roadside storage bin. (Not shown)

16 Remove the Communications Module (CM) from the storage box and wrap it in cellulose. Store it in the inside roadside storage bin. (Not shown)

17 Remove the Z bracket antenna mounts and store them in the exterior roadside storage bin. (Not shown)

18 Remove the front work station guard (grate). Reinstall the screws to the guard. (Not shown)

19 Remove the canvas support bracket. (Not shown)

20 Using four people remove the canvas bows and side guards. Number the bows and ties to aid in reinstalling them. Remove the two center posts first. Remove the forward canvas post next. Finally, using two people to hold the side guards, remove the rear posts. (Not shown)

21 Remove the tailgate gap cover. (Not shown)

22 Remove the ladder handle. (Not shown)

23 Remove the ladder. (Not shown)

Figure 3-5. SICPS rigged in the M1097 HMMWV (continued)

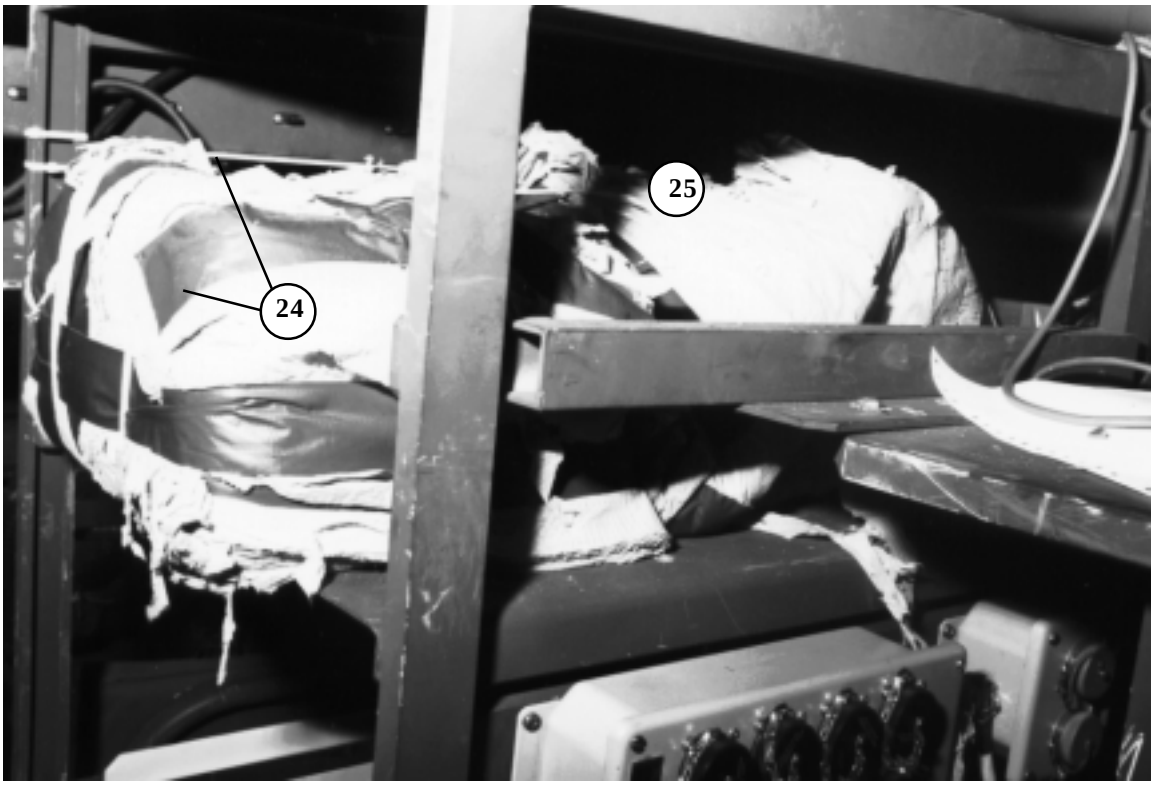

24 Wrap the fan and heater in cellulose and secure it in the curbside rack setup with type III nylon cord.

25 Store any miscellaneous cables and the rear blackout cover in the inside curbside storage bin.

26 Store the tool box in the inside roadside storage bin. (Not shown)

27 Store the surface wire grounding kit, the 75-foot input power cable, the pigtail input power cable and wrapped vehicle mirrors in the exterior roadside storage bin. (Not shown)

28 Store the exhaust hose, jack and the OVM equipment in the exterior roadside storage bin. (Not shown)

Figure 3-5. SICPS rigged in the M1097 HMMWV (continued)

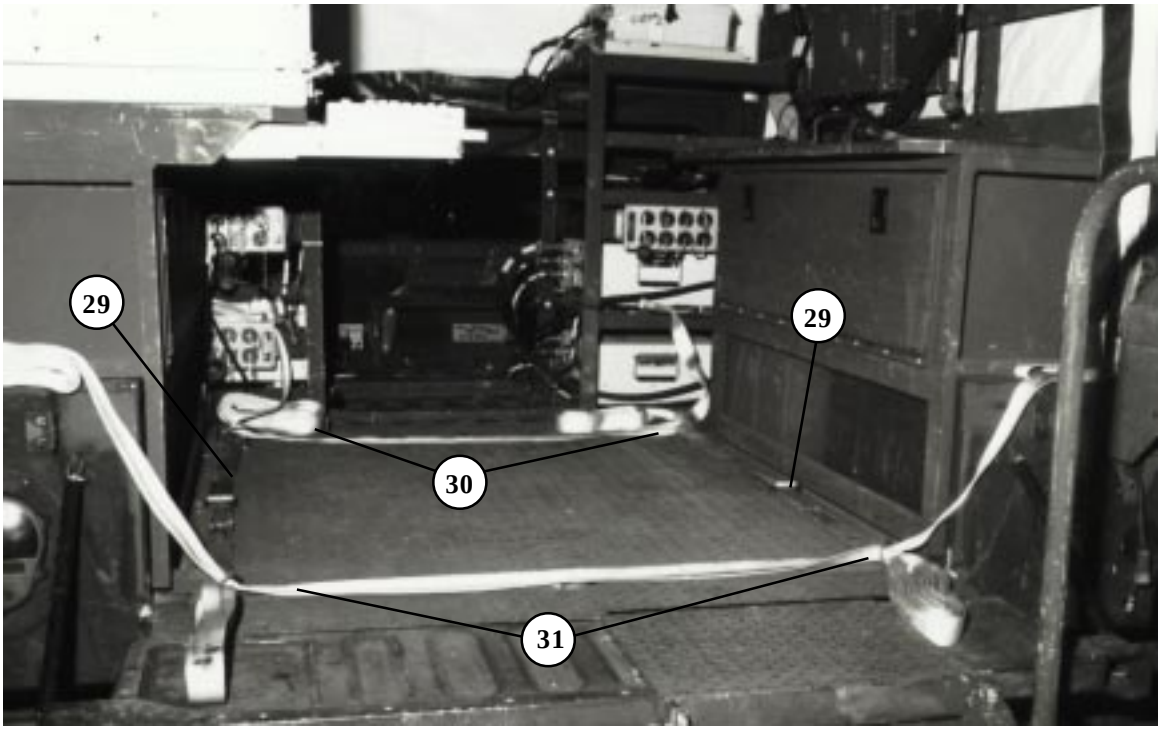

29 Preposition one 30-foot lashing through the left side tie-down rings centering the joined D-rings between the tie-down rings. Preposition one 30-foot lashing through the right side tie-down rings centering the joined D-rings between the tie-down rings.

30 Preposition a lashing running it through the front right and left tie-down rings evening the ends and leaving an equal length of lashing at each ring.

31 Preposition a lashing running it through the rear right and left tie-down rings evening the ends and leaving an equal length of lashing at each ring.

Figure 3-5. SICPS rigged in the M1097 HMMWV (continued)

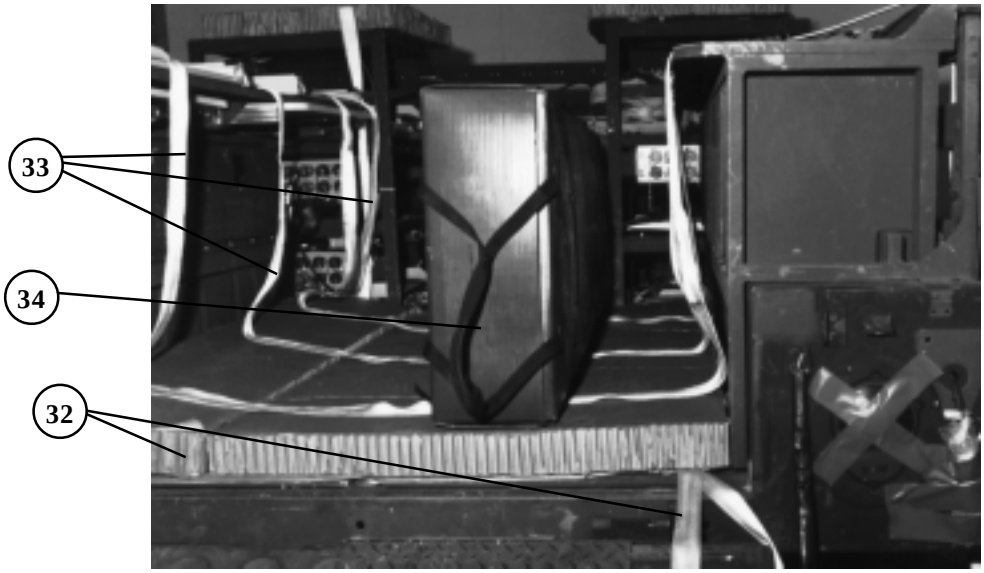

32 Cover the floor of the truck bed with one layer of honeycomb. Move the running ends of the lashings out from under the honeycomb and place where they will be accessible later.

33 Preposition three lashings on top of the honeycomb spacing them apart with an equal length running to both the right and left sides.

34 Place the antenna mast storage box in the truck flush with the right rack and the front radio stand.

Figure 3-5. SICPS rigged in the M1097 HMMWV (continued)

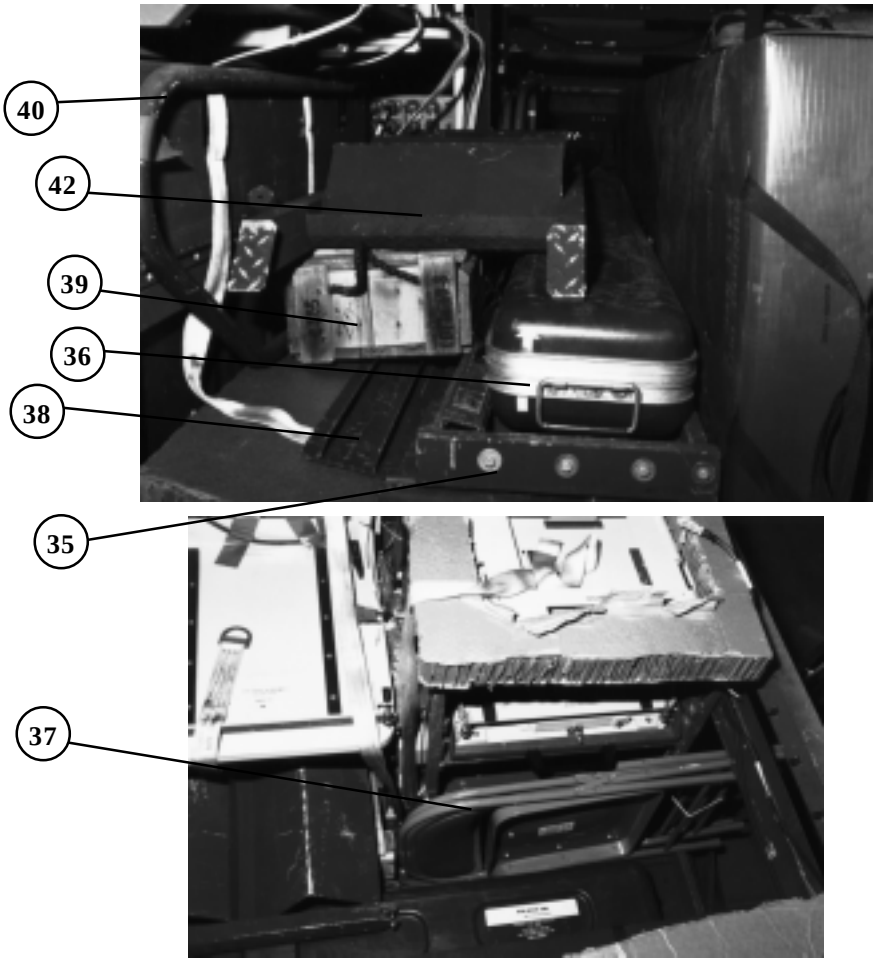

35 Place the forward antenna mount to the left side of the mast mount.

36 Place the PCM bracket on top of the antenna mount.

37 Place folding chairs next to the left side front rack.

38 Place the tailgate gap next to the antenna mount.

39 Place the overhead light storage box on top of the PCM mount.

40 Place the stair rail next to the left side work station.

41 Place miscellaneous parts box on top of the tailgate gap. (Not shown)

42 Place the stairs on top of the parts box on the light box.

Figure 3-5. SICPS rigged in the M1097 HMMWV (continued)

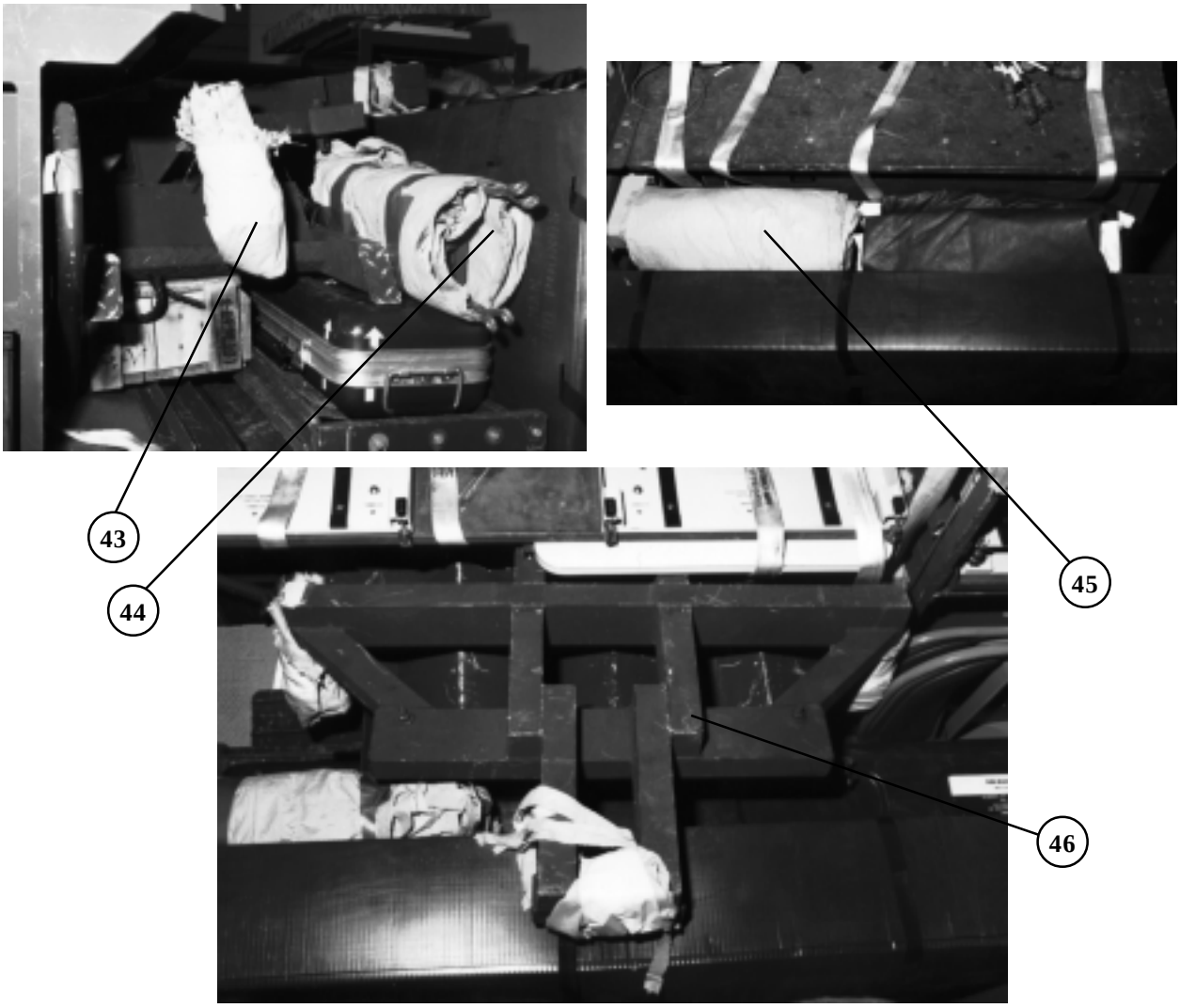

43 Place the wrapped mast adapter on top of the light box and next to the stairs.

44 Place wrapped PCM on the right side of the mast box to the front of the vehicle with the switches toward the mast box.

45 Place the vehicle's canvas top and the white liner on the right side of the mast box flush with the PCM.

46 Place the mast antenna mount on top of the stairs with the large side against the left work station and one side flush with the left side rack.

Figure 3-5. SICPS rigged in the M1097 HMMWV (continued)

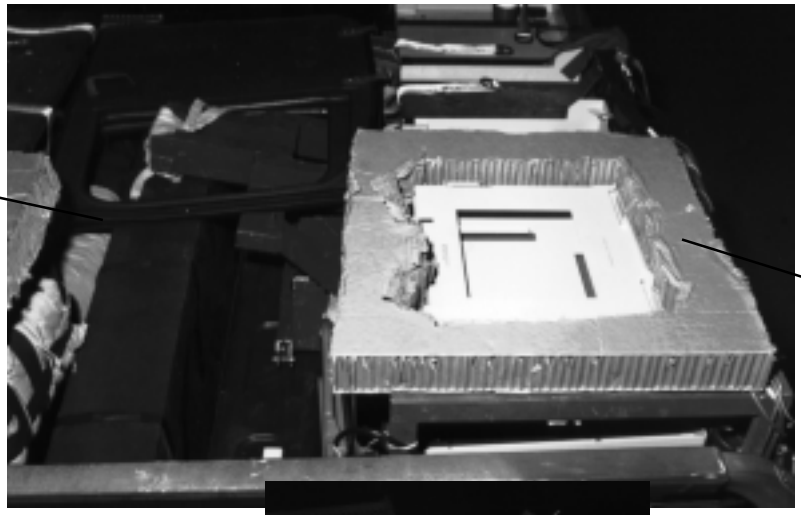

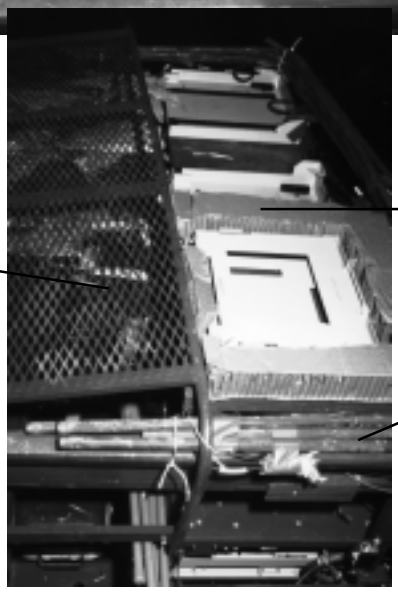

47 Place the vehicle's doors on top of the mast box and the mast mount with the bottom of the doors even with the rear edge of the mast box.

48 Cut to fit two pieces of honeycomb to cover the top of each of the racks. Cut out the centers so the honeycomb lays flat on top of the racks.

49 Place the canvas support bows along the top left edge of the workstation with the legs to the front of the left rack. Secure it to the vehicle with type III nylon cord.

50 Place the workstation guard on top of the load with one side in front of the racks and between the seats. Secure it to the vehicle with type III nylon cord.

Figure 3-5. SICPS rigged in the M1097 HMMWV (continued)

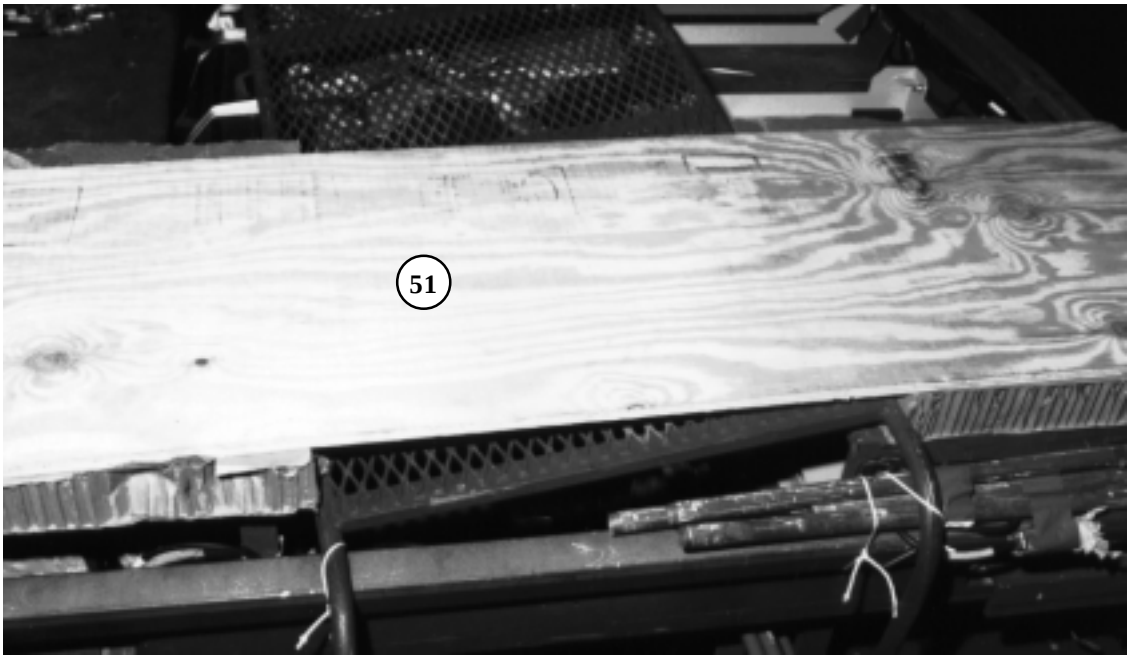

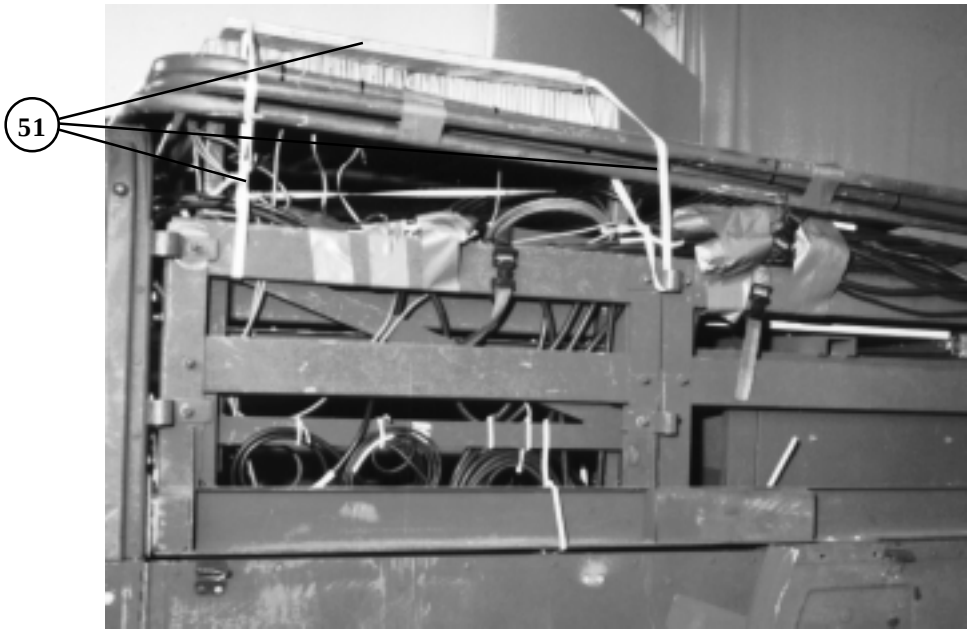

51 Cut a 3/4- by 80- by 24-inch piece of plywood. Round the corners and drill a 1-inch hole in each corner, 1 inch from the edge and place it centered on top of the two pieces of honeycomb in step 48. Secure it to the load with type I 1/4-inch cotton webbing.

Figure 3-5. SICPS rigged in the M1097 HMMWV (continued)

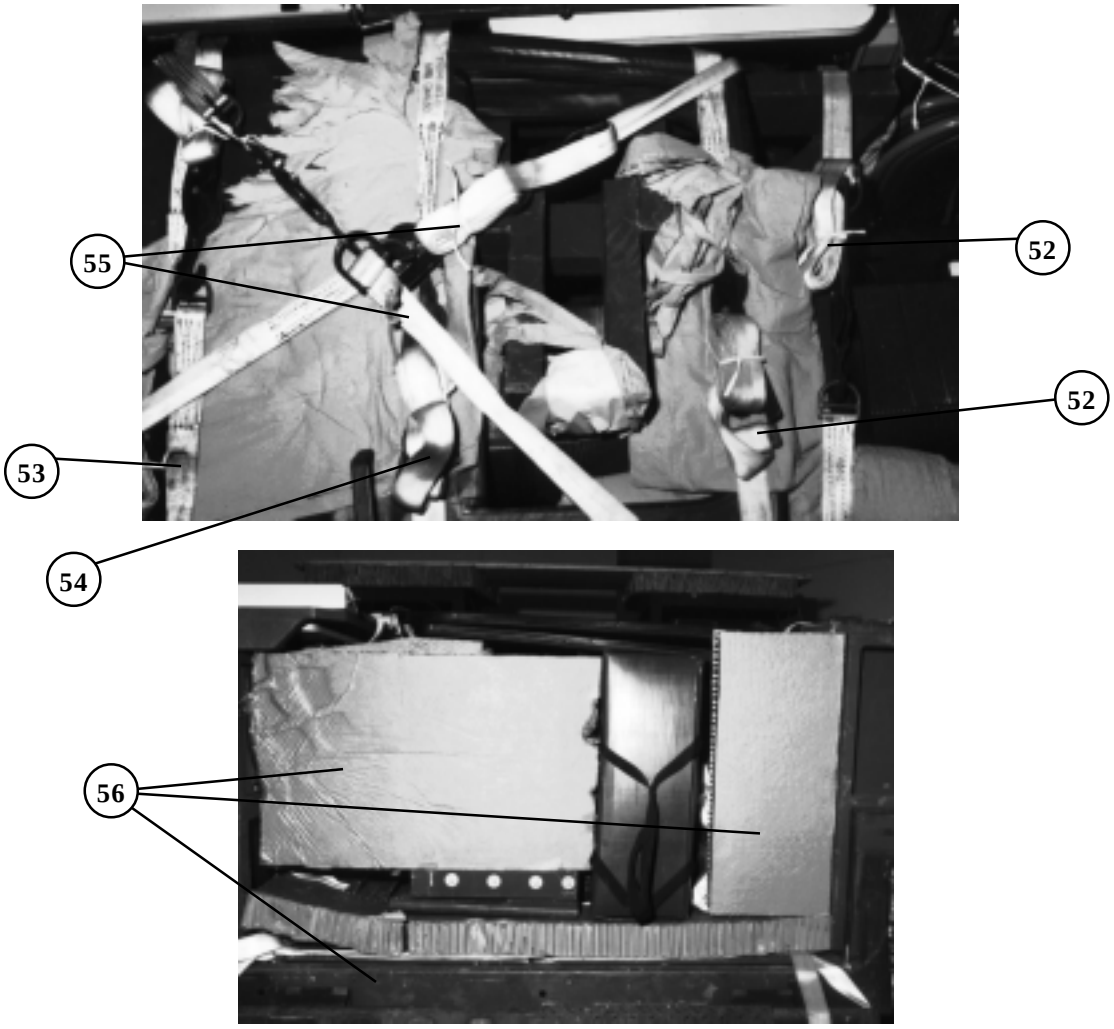

52 Fill the gaps in the top of the load with honeycomb and pad the top of the load with cellulose. Secure the three prepositioned lashings from step 33 to their own ends.

53 Secure the lashing from step 30 to it's own ends.

54 Secure the lashing from step 31 to it's own ends.

55 Secure the lashings from step 29 crossing the ends to the opposite lashing.

56 Fill in the rear of the load with honeycomb and secure the tailgate.

57 Place a canvas load cover over the rear of the truck covering the accompanying load and secure it in place with type III nylon cord. (Not shown)

Figure 3-5. SICPS rigged in the M1097 HMMWV (continued)

3-6. Positioning the CHS-2 Equipment on the Platform

Position the CHS-2 equipment on the platform as shown in Figure 3-6.

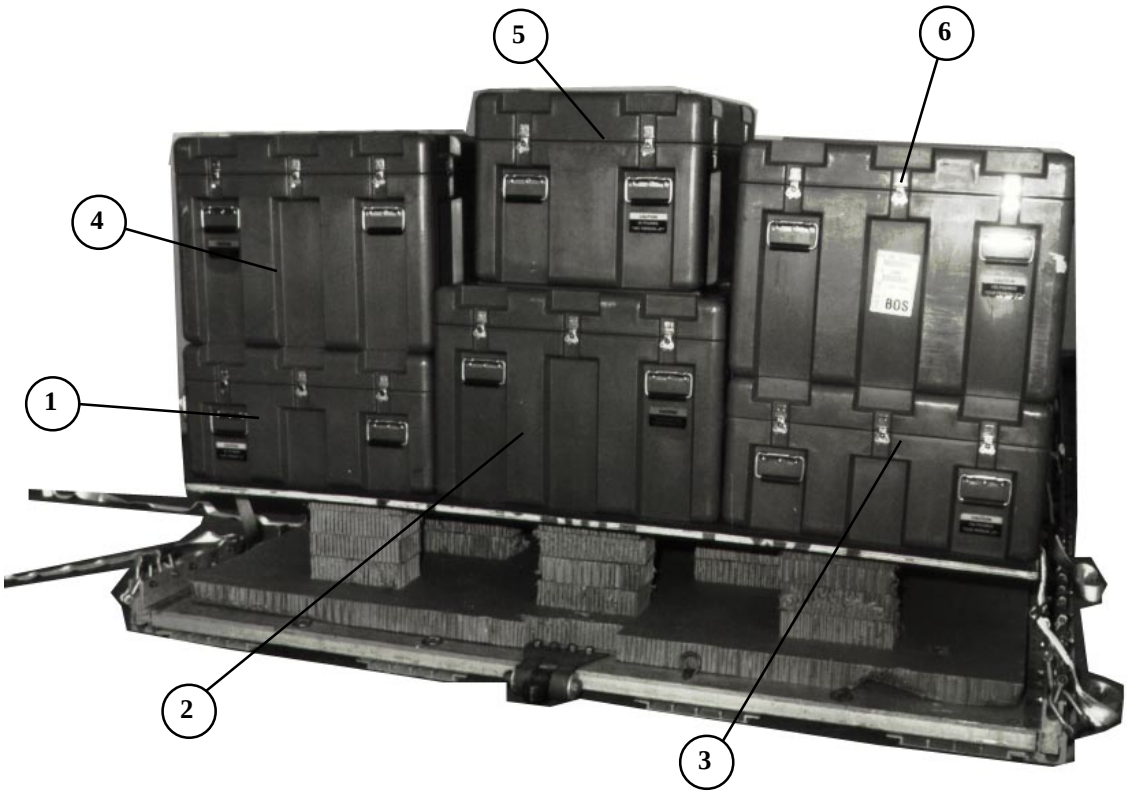

1. Position the UPS 2 even with the left rear corner of plywood.
2. Position the LP flush next to the UPS 2 on the right.
3. Position the UPS 1 flush next to the LP on the right.
4. Position the CMD 2 centered on top of the UPS 2 on the left rear corner.
5. Position the CGP on top of the LP flush with the rear edge and centered with the right and left side of the LP.
6. Position the CMD 1 centered on top of the UPS 1 on the right rear corner of the plywood.

Figure 3-6. CHS-2 Equipment positioned on the platform

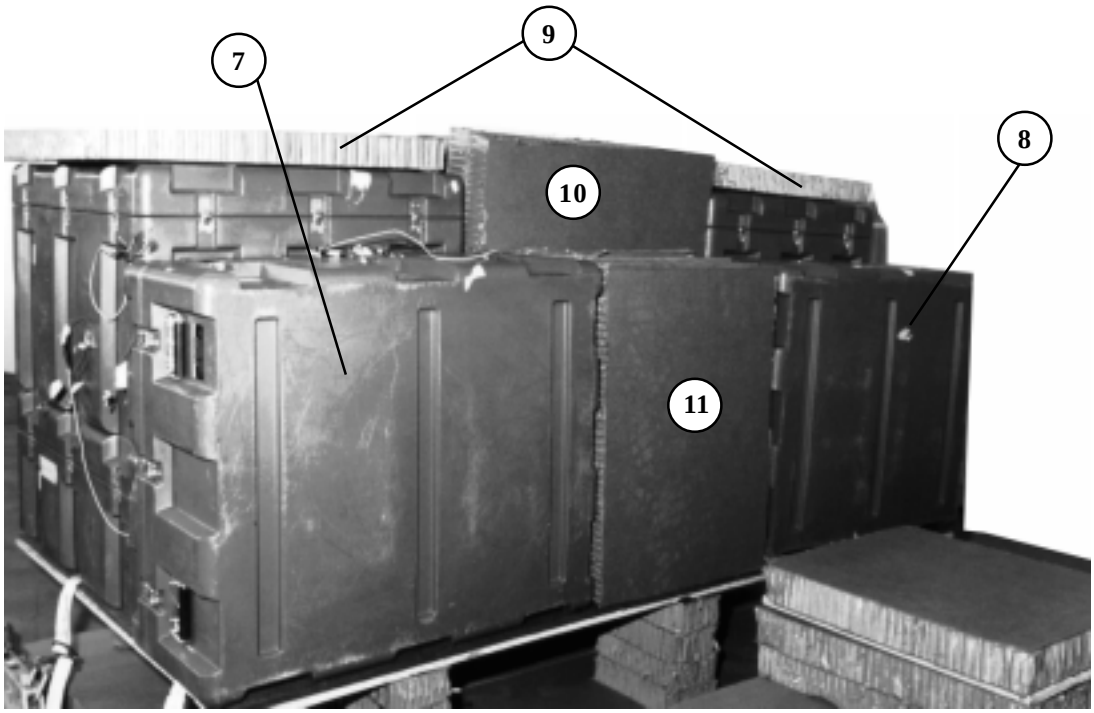

7 Position the HCU flush against the UPS 1 and the CMD 1 and even with the forward left corner of the plywood on the edge with the handles out on the left and right sides with the hinge side down.

8 Position the TCU flush against the UPS 2 and the CMD 1 and even with the forward left corner of the plywood on the edge with the handles out on the left and right sides with the hinge side down.

9 Cut two 36- by 38-inch pieces of honeycomb and position one on top of the CMD 1 and one on top of the CMD 2.

10 Cut three 27- by 20-inch pieces of honeycomb and position all three forward of the CGP.

11 Cut five 16- by 32-inch pieces of honeycomb and position all five between the TCU and the HCU.

Figure 3-6. CHS-2 Equipment positioned on the platform (continued)

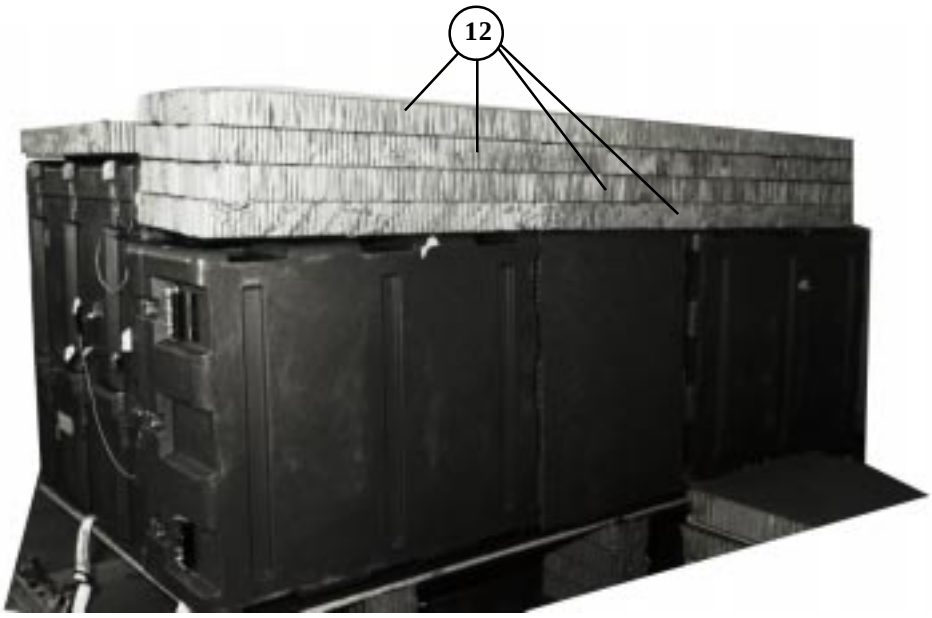

12 Secure the forward preposition lashing over the TCU and the HCU. Cut four 16- by 96-inch pieces of honeycomb and position them on top of the TCU and the HCU.

13 Cut two 16- by 36-inch pieces of honeycomb and two 16- by 36-inch pieces of felt. Position one piece of felt and one piece of honeycomb on the right and left sides of the CGP.

14 Secure the rear prepositioned lashing over the honeycomb and load. (Not shown)

Figure 3-6. CHS-2 Equipment positioned on the platform (continued)

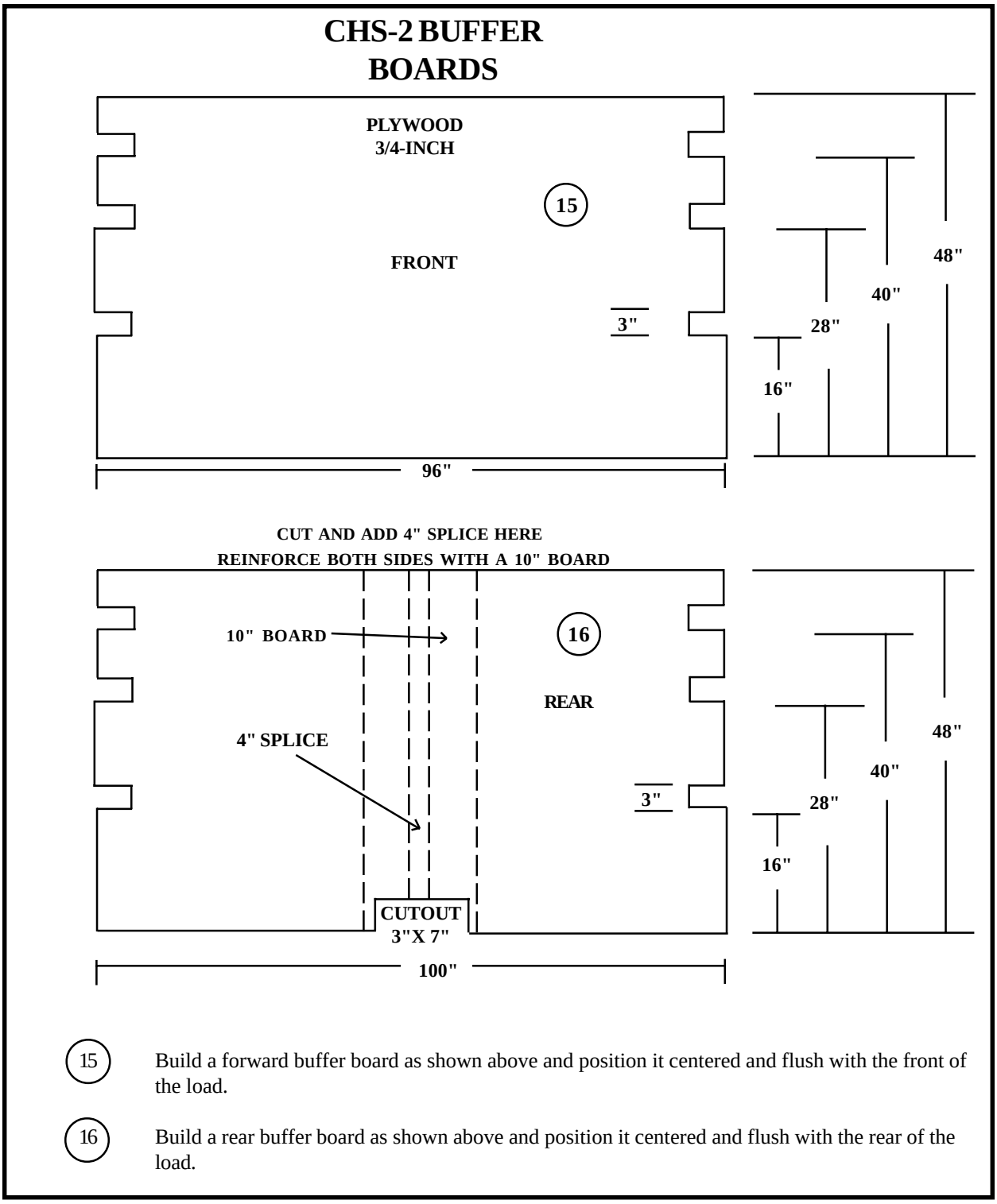

15 Build a forward buffer board as shown above and position it centered and flush with the front of the load.

16 Build a rear buffer board as shown above and position it centered and flush with the rear of the load.

Figure 3-6. CHS-2 Equipment positioned on the platform (continued)

3-7. Lashing the CHS-2 Equipment to the Platform

Lash the CHS-2 equipment to the platform as shown in Figure 3-7.

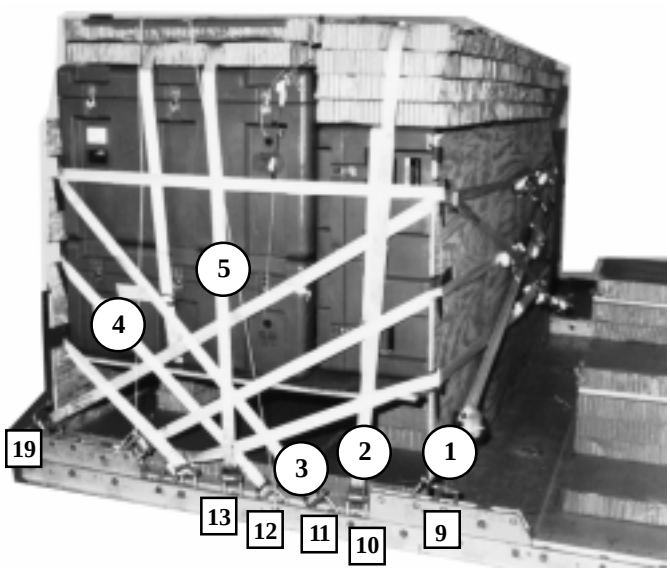

1. Run a 30-foot lashing from clevis 9 through the top left side cutouts of the buffer boards to clevis 19.
2. Run a lashing through clevis 10 and it's own D-ring and over the load. Run another lashing through clevis 10A and it's own D-ring. Secure the lashings together on the left side of the load.
3. Run a lashing through clevis 11 and it's own D-ring and through the top right rear cutout of the buffer board. Run another lashing through clevis 11A and it's own D-ring and through the top left rear cutout of the buffer board. Secure the lashings together on the rear of the load.
4. Run a lashing through clevis 12 and it's own D-ring and through the center right rear cutout of the buffer board. Run another lashing through clevis 12A and it's own D-ring and through the center left rear cutout of the buffer board. Secure the lashings together on the rear of the load.
5. Run a lashing through clevis 13 and it's own D-ring and over the load. Run another lashing through clevis 13A and it's own D-ring and secure the lashings together on the left side of the load.

Figure 3-7. CHS-2 equipment lashed to the platform

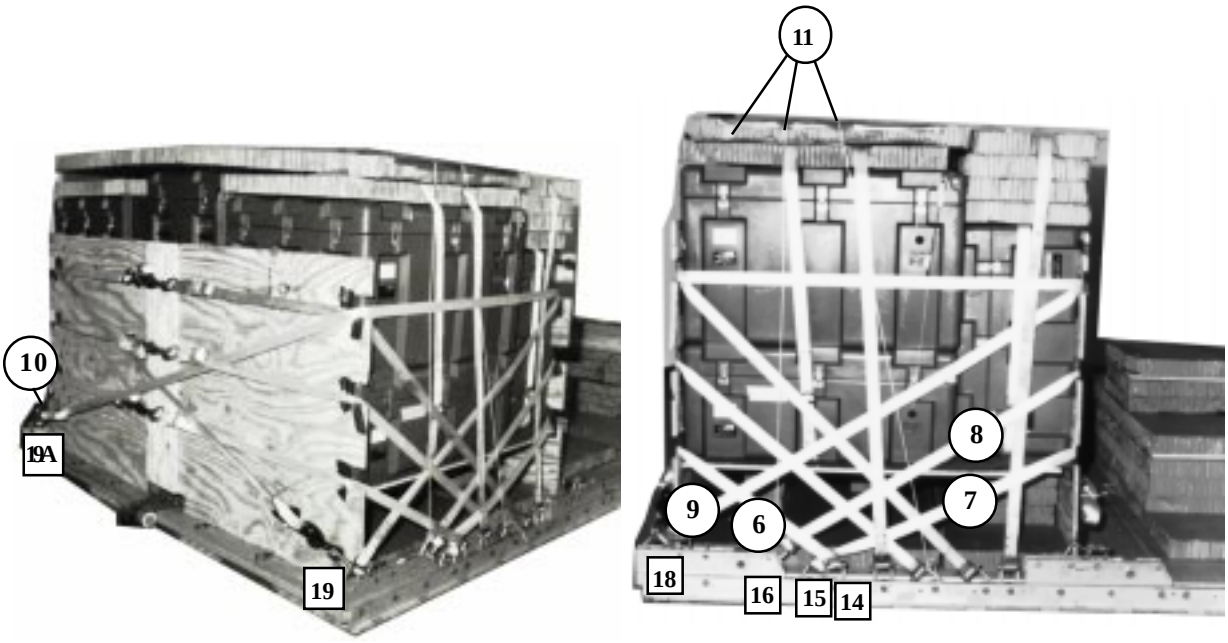

6 Run a lashing through clevis 14 and it's own D-ring and through the bottom right rear cutout of the buffer board. Run another lashing through clevis 14A and it's own D-ring and through the bottom left rear cutout of the buffer board. Secure the lashings together on the rear of the load.

7 Run a lashing through clevis 15 and it's own D-ring and through the bottom right front cutout of the buffer board. Run another lashing through clevis 15A and it's own D-ring and through the bottom left front cutout of the buffer board. Secure the lashings together on the front of the load.

8 Run a lashing through clevis 16 and it's own D-ring and through the center right front cutout of the buffer board. Run another lashing through clevis 16A and it's own D-ring and through the center left front cutout of the buffer board. Secure the lashings together on the front of the load.

9 Run a lashing through clevis 18 and it's own D-ring and through the top right front cutout of the buffer board. Run another lashing through clevis 18A and it's own D-ring and through the top left front cutout of the buffer board and secure the lashings together on the front of the load.

10 Run a 30-foot lashing from clevis 9A (Not shown) to the top left side cutout of the buffer board to clevis 19A.

11 Position one piece of 36- by 96-inch honeycomb on top of the CHS-2 load even with the rear edge and secure to the platform with type III nylon cord.

Figure 3-7. CHS-2 equipment lashed to the platform (continued)

3-8. Positioning HMMWV on the Platform

Position the HMMWV on the platform as shown in Figure 3-8.

Note: The use of HDDS is optional but recommended.

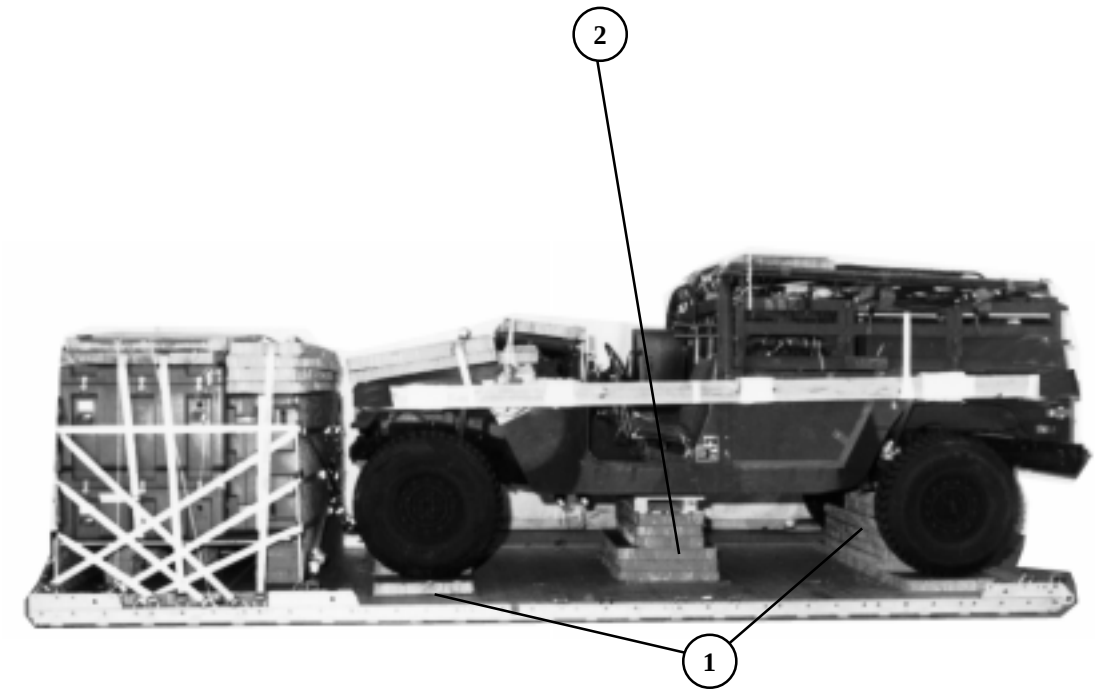

1 Position the HMMWV on the platform so that the suspension crossmember of the HMMWV rests squarely on stacks 1 and 3.

2 Position the crossmember of the HMMWV centered on top of the 43-inch wide top piece of honeycomb on stack 2. The right and left sides of the frame must set on the sides of the top piece of honeycomb.

Figure 3-8. HMMWV positioned on the platform

3-9. Lashing HMMWV to the Platform

Lash the HMMWV to the platform as shown in Figure 3-9.

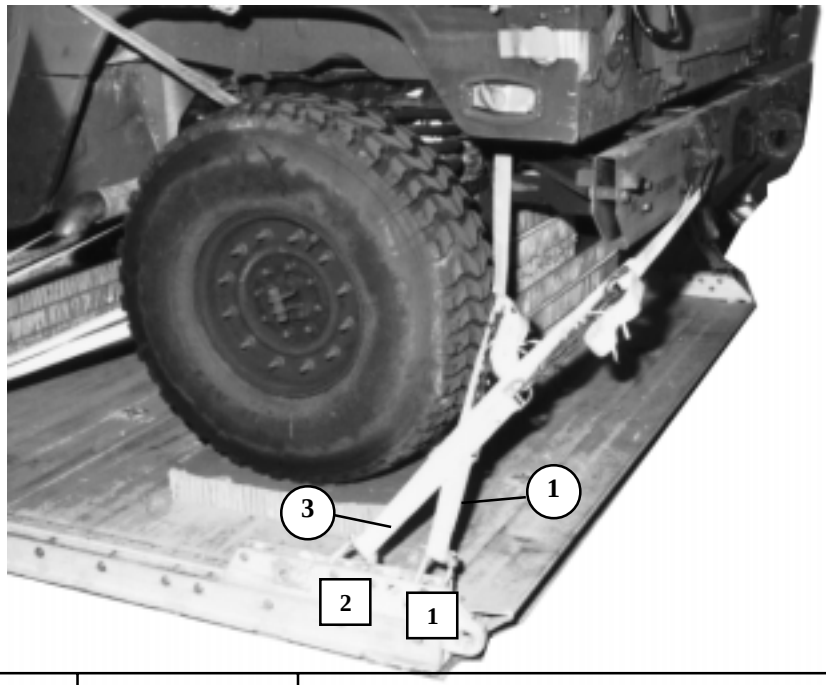

Lashing Number	Tiedown Clevis Number	Instructions
		Pass lashing:
1	1	Through tie-down bracket behind left rear coil spring.
2	1A	Through tie-down bracket behind right rear coil spring.
3	2	Through left rear lifting shackle.
4	2A	Through right rear lifting shackle.

Figure 3-9. HMMWV lashed to the platform

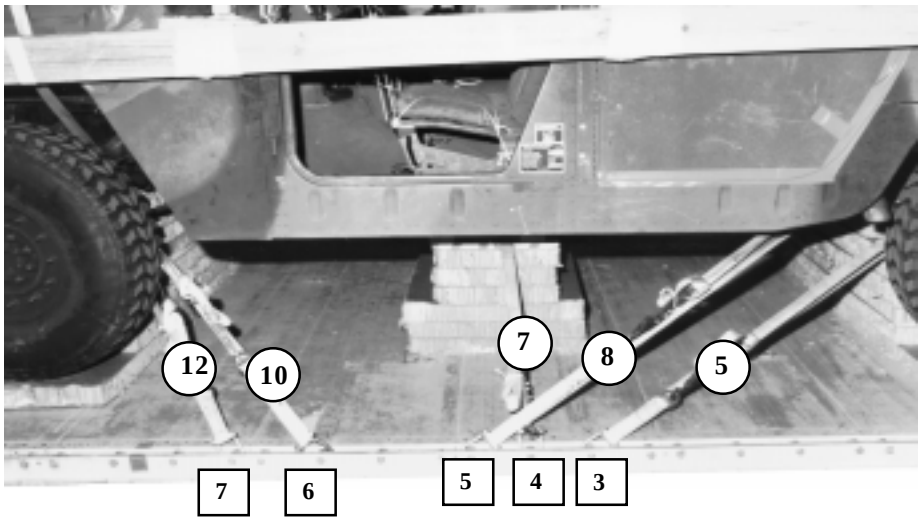

Lashing Number	Tiedown Clevis Number	Instructions
		Pass lashing:
5	3	Around left rear lower control arm.
6	3A	Around right rear lower control arm.
7	4 to 4A	Through clevis 4A and it's own D-ring. Run the lashing between the 4x4's of stack 2 and secure it to clevis 4.
8	5	Through tie-down bracket in front of the left rear coil spring.
9	5A	Through tie-down bracket in front of the right rear coil spring.
10	6	Through tie-down bracket behind the left front coil spring.
11	6A	Through tie-down bracket behind right front coil spring.
12	7	Around left lower control arm.
13	7A	Around right lower control arm.

Figure 3-9. HMMWV lashed to the platform (continued)

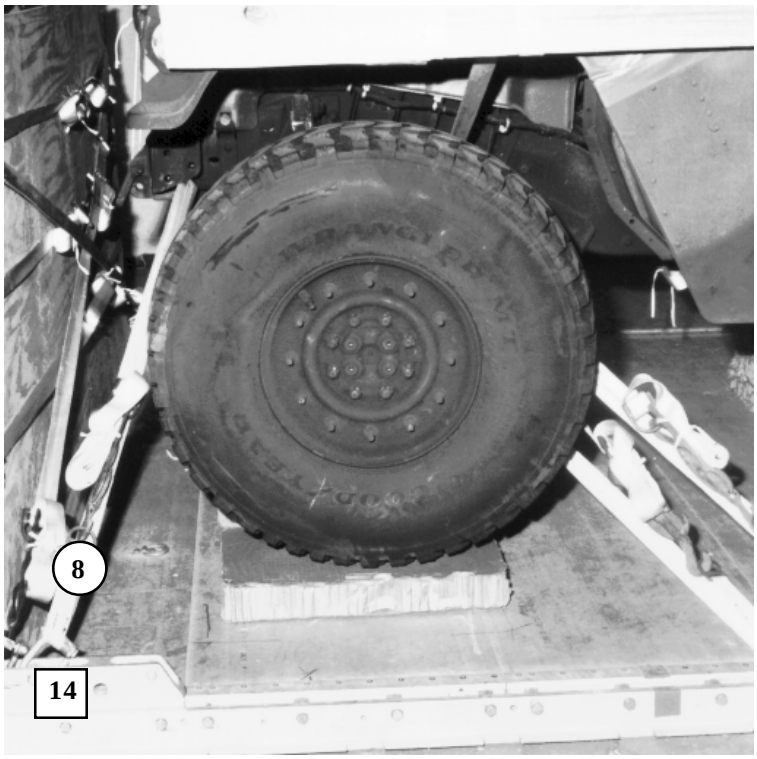

Lashing Number	Tiedown Clevis Number	Instructions
		Pass lashing:
14	8	Through tie-down bracket on the end of the left frame rail.
15	8A	Through tie-down bracket on the end of the right frame rail.

Figure 3-9. HMMWV lashed to the platform (continued)

3-10. Installing Load Cover, Suspension Slings and Deadman Tie

Install the suspension slings and deadman tie as shown in Figure 3-10.

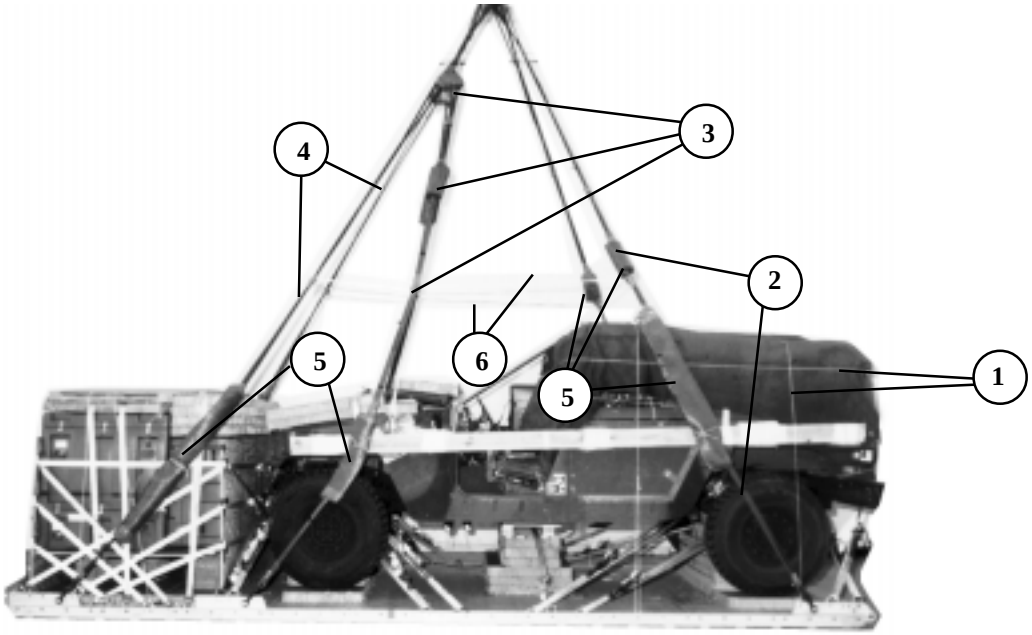

1. Secure the cover on the SICPS load with type III nylon cord.
2. Attach a large clevis to one end of two 9-foot (2-loop), type XXVI nylon suspension slings. Attach one sling and clevis to each front tandem link. Attach another 9-foot (2-loop), type XXVI nylon suspension sling to each front sling with a 3 3/4-inch link.
3. Attach a large clevis to one end of two 11-foot (2-loop), type XXVI nylon suspension slings. Attach one sling and clevis to each center suspension link. Attach another 3-foot (2-loop), type XXVI nylon suspension sling to each center sling with a 5 1/2-inch link. Attach a 3-point link to the end of the 3-foot sling.
4. Attach a large clevis to one end of two 16-foot (2-loop), type XXVI nylon suspension slings. Attach one sling and clevis to each rear tandem link. Attach the running end of each rear sling to the 3-point in step 3 and add a 3-foot (2-loop), type XXVI nylon suspension sling to the top of both 3-point links in step 3.
5. Pad the slings as shown above where they come in contact with the load and side boards and safety tie them to the load.
6. Raise the slings and install the deadman tie as shown above.

Figure 3-10. Load cover, suspension slings and deadman tie installed

3-11. Preparing and Stowing Cargo Parachutes and Installing Extraction System

Prepare, stow and restrain three G-11 cargo parachutes on top of the honeycomb according to FM 10-500-2/TO 13C7-1-5. Restrain the parachutes as shown in Figure 3-11. Install the EFTC according to FM 10-500-2/TO 13C7-1-5 and as shown in Figure 3-11.

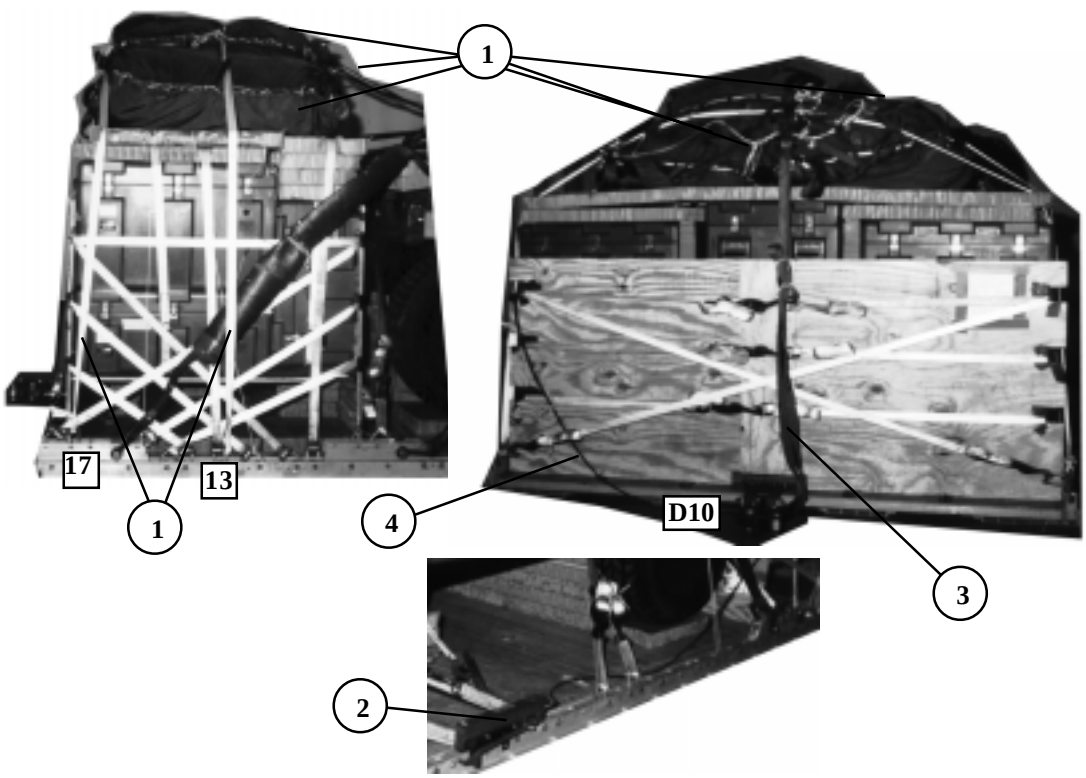

1. Prepare, stow, and restrain three G-11 cargo parachutes on top of the honeycomb according to FM 10-500-2/TO 13C7-1-5. Restrain the parachutes using clevises 13, 13A, 17, and 17A.
2. Install the components of the EFTC according to FM 10-500-2/TO 13C7-1-5 using the rear mounting holes for the EFTC bracket.
3. Attach a 9-foot (2-loop), type XXVI nylon sling to be used as a deployment line.
4. Use a 20-foot EFTC cable and route it as shown above. Safety the cable to tie-down ring D10 using one turn of type I, 1/4-inch cotton webbing.

Figure 3-11. Cargo parachutes prepared and stowed and the EFTC system installed

3-12. Installing Parachute Release

Prepare, attach, and safety an M-1 release according to FM 10-500-2/TO 13C7-1-5 and as shown in Figure 3-12.

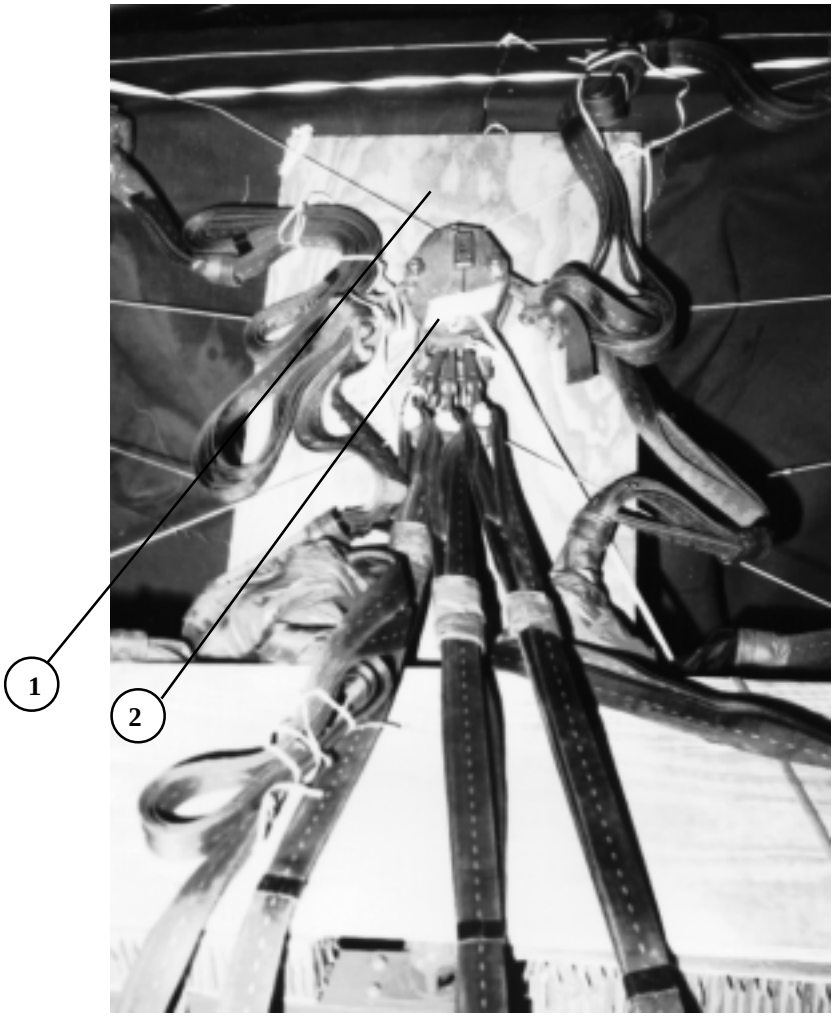

1 Place a 3/4- by 24- by 42-inch piece of plywood on top of the load cover.

2 Place the M-1 release on top of the plywood. Tie it to convenient points with type III nylon cord. Connect the riser extensions and suspension slings according to FM 10-500-2/TO 13C7-1-5.

Figure 3-12. M-1 cargo parachute release installed

3-13. Placing Extraction Parachute

Select the extraction parachute and extraction line needed using the extraction line requirements table in FM 10-500-2/TO 13C7-1-5. Place the extraction line on the load for installation in the aircraft.

3-14. Installing Provisions for Emergency Restraints

Select and install the provisions for the emergency aft restraints according to the emergency aft restraint requirements table in FM 10-500-2/TO 13C7-1-5.

3-15. Marking Rigged Load

Mark the rigged load according to FM 10-500-2/TO 13C7-1-5 and as shown in Figure 3-13. Complete Shipper's Declaration for Dangerous Goods and affix to load. If the load varies from the one shown, the weight, height, CB, tip off curve, and parachute requirements must be recomputed.

3-16. Equipment Required

Use the equipment listed in Table 3-1 to rig the load shown in Figure 3-13.

CAUTION
Make the final rigger inspection required by FM 10-500-2/TO 13C7-1-5 before the load leaves the rigging site.

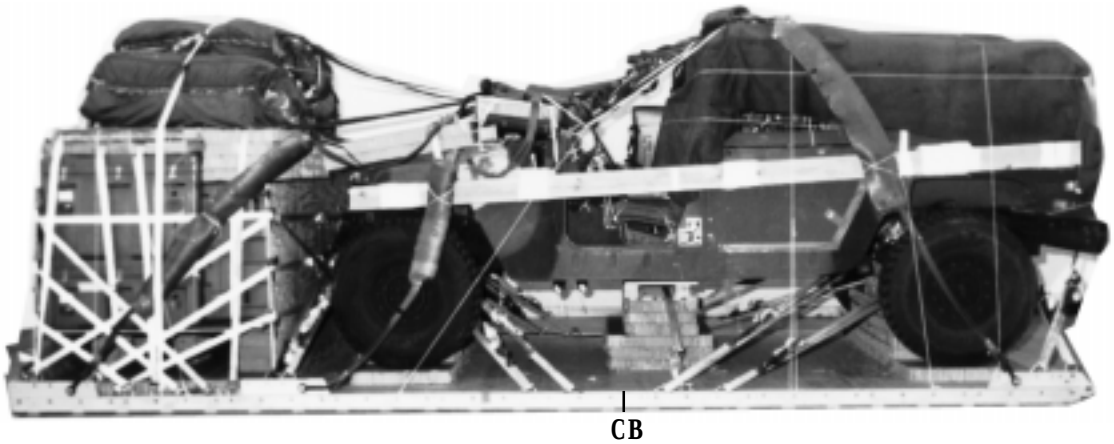

RIGGED LOAD DATA

Weight.....12,100 pounds

Max Weight.....12,500 pounds

Height.....94 inches

Width.....108 inches

Length.....258 inches

Overhang: Front.....None

Rear.....0 inches

Center of Balance (CB)
(from front edge of the platform).....110 inches

Extraction System.....EFTC

Figure 3-13. SICPS with the CHS-2 rigged on a 20-foot type V platform for low-velocity airdrop

Table 3-1. Equipment required for rigging the SICPS with the CHS-2 rigged on a 20-foot type V platform for low-velocity airdrop

National Stock Number	Item	
8040-00-273-8713	Adhesive, paste, 1-gal.	As required
1670-01-035-6054	Bridle (for line bag)	1
	Clevis, suspension:	
4030-00-090-5354	1-in (large)	10
8305-00-242-3593	Cloth, cotton duck, 60-in	As required
4020-00-240-2146	Cord, nylon, type III, 550-lb.	As required
1670-00-434-5787	Coupling, airdrop extraction force transfer cable, 20-ft	1
	Cover:	
1670-00-360-0328	Clevis, large	4
1670-00-360-0329	Link, type IV	7
8135-00-664-6958	Cushioning material, packaging, cellulose wadding	As required
8305-00-958-3685	Felt, 1/2-in thick	As required
1670-01-183-2678	Leaf, extraction line (line bag)	3
	Line extraction:	
1670-01-062-6313	60-ft (3-loop), type XXVI (C-130)	1
1670-01-107-7651	140-ft (3-loop), type XXVI (for C-141,C-5 or C-17)	1
1670-01-064-4452	60-ft (1-loop), type XXVI with towplate link (for C-17) Drogue Line	1
	Link assembly:	
1670-00-783-5988	Type IV	6
	Two-point:	
5306-00-435-8994	Bolt, 1-in diam, 4-in long	2
5310-00-232-5165	Nut, 1-in, hexagonal	2
1670-00-003-1953	Plate, side, 3 3/4-in	2
5365-00-007-3414	Spacer, large	2
5315-00-010-4659	Nail, steel wire, 8d	As required
1670-00-753-3928	Pad, energy-dissipating, (honeycomb),	
	3- by 36- by 96-in:	27 sheets
	Parachute, cargo	
1670-01-016-7841	G-11B	3
	Parachute, cargo extraction	
1670-01-063-3716	22-ft	1
	Drogue (for C-17)	
1670-01-063-3715	15-ft	1
	Platform, airdrop, type V, 20-ft:	1
1670-01-162-2372	Clevis, assembly (type V)	(30)
1670-01-353-8424	Extraction bracket assembly	(1)
1670-01-353-8425	Bracket assembly, coupling	(1)
1670-01-247-2389	Suspension link	(2)
1670-01-162-2381	Tandem link assembly (Multipurpose link)	(2)
	Lumber:	
5510-00-220-6146	2- by 4- by:	As required
5510-00-220-6274	4- by 4- by:	As required
5510-00-220-6148	2- by 6- by:	As required
5530-00-128-4981	Plywood, 3/4-in:	8 sheets

Table 3-1. Equipment required for rigging the SICPS with the CHS-2 rigged on a 20-foot type V platform for low-velocity airdrop (continued)

National Stock Number	Item	Quantity
1670-01-097-8816	Release, cargo parachute, M-1	1
	Sling, cargo, airdrop:	
	For suspension:	
5340-01-062-7761	16-ft (2-loop), type XXVI	2
1670-01-062-6301	3ft (2-loop), type XXVI	2
1670-01-062-6304	9-ft (2-loop), type XXVI	2
1670-01-063-7760	11-ft (2-loop), type XXVI	2
	For lifting:	
1670-01-062-6304	9-ft (2-loop), type XXVI	2
1670-01-062-6303	12-ft (2-loop), type XXVI	2
	For deployment:	
1670-01-062-6304	9-ft (2-loop), type XXVI	1
	For riser extension:	
1670-01-062-6302	20-ft (2-loop), type XXVI	6
1670-00-040-8219	Strap, parachute release, multi-cut, comes with 3 knives	2
7501-00-266-5016	Tape, adhesive, 2-in	As required
1670-01-344-0825	Vehicle drive-off aid (HDDS)	1
1670-00-937-0271	Tiedown assembly, 15-ft	42
	Webbing:	
8305-00-268-2411	Cotton, 1/4-inch, type I	As required
8305-00-082-5752	Nylon, tubular 1/2-in	As required
8305-00-263-3591	Type VIII	As required

CHAPTER 4

RIGGING THE COMMAND ASSAULT VEHICLE (CAV) ON A 20-FOOT, TYPE V AIRDROP PLATFORM FOR LOW-VELOCITY AIRDROP

4-1. Description of Load

The M996 ambulance is rigged on a 20-foot, type V airdrop platform for low-velocity airdrop. The load requires three G-11 cargo parachutes. The CAV is rigged with communication equipment. The rigging of the CAV will follow FM 10-500-66/TO 13C7-26-71 unless stated in this chapter.

4-2. Preparing Platform

Prepare a 20-foot, type V airdrop platform as shown in Figure 4-1.

NOTES:
1. The nose bumper may or may not be installed.
2. Measurements given in this load are from the front edge of the platform, NOT from the front edge of the nose bumper.
3. You will need a copy of FM 10-517/TO 13C-1-111 and FM 10-500-66/TO 13C7-25-71to rig this load.

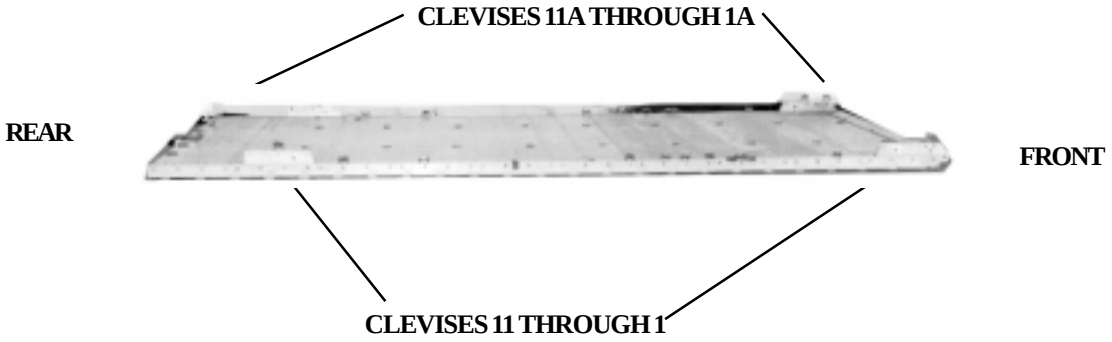

Step:

1. Inspect, or assemble and inspect, a 20-foot, type V airdrop platform as outlined in TM 10-1670-268-20&P/TO 13C7-52-22.

2. Install a tandem link to the front of each platform side rail using holes 1, 2, and 3.

3. Install a clevis on bushings 1 and 3 on the front tandem links.

4. Install a suspension link to each side rail using holes 33, 34, and 35.

6. Install a clevis on bushing 2 on the aft suspension links.

7. Starting at the front of each platform side rail, install clevises on the bushings bolted on holes 6, 11(double), 13, 14, 15, 17, and 27.

8. Starting at the front of the platform, number the clevises 1 through 11 on the right side and 1A through 11A on the left side.

9. Label the tie-down rings according to FM 10-500-2/TO 13C7-1-5.

Figure 4-1. Platform prepared

4-3. Building and Positioning Honeycomb Stacks

Build the honeycomb stacks as shown in Figures 4-2 and 4-3. Position the honeycomb stacks as shown in Figure 4-4.

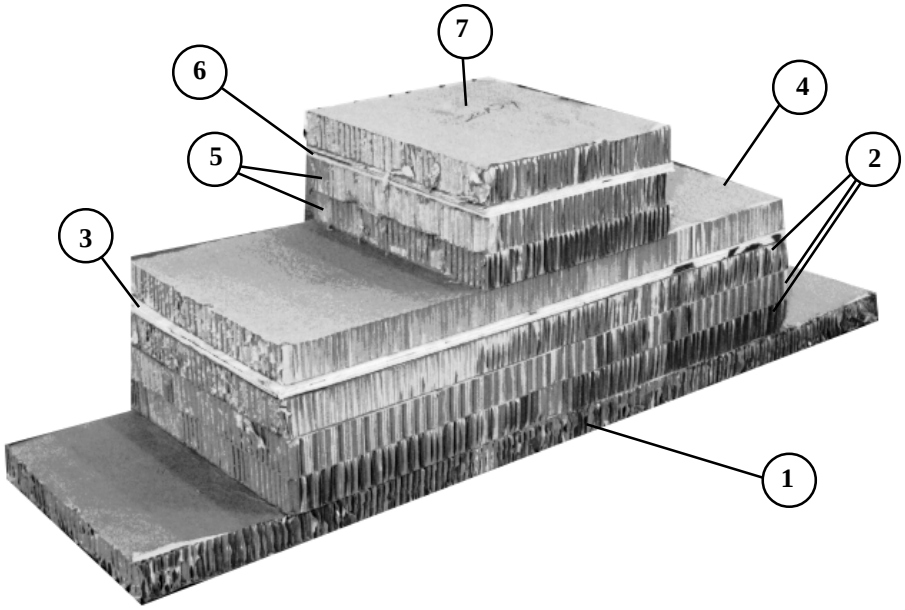

1. Use an 80- by 24-inch piece of honeycomb to form a base.
2. Center and glue three 54- by 24-inch pieces of honeycomb on the base.
3. Place and glue a 3/4- by 54- by 24-inch piece of plywood over the honeycomb placed in step 2 above.
4. Place and glue one 54- by 24-inch piece of honeycomb on top of the plywood placed in step 3 above.
5. Center and glue two 20- by 24-inch pieces of honeycomb on top of the honeycomb placed in step 4 above.
6. Place and glue a 3/4- by 20- by 24-inch piece of plywood over the honeycomb placed in step 5 above.
7. Place and glue one 20- by 24-inch piece of honeycomb on top of the plywood placed in step 6 above.

Figure 4-2. Stacks 1 and 3 prepared

Notes: 1. This drawing is not to scale.
2. All dimensions are given in inches.

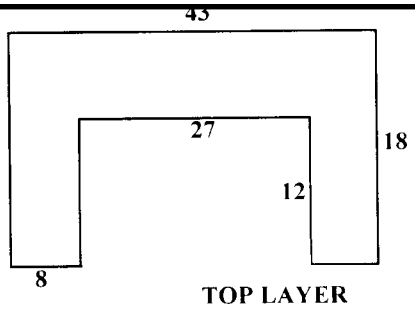

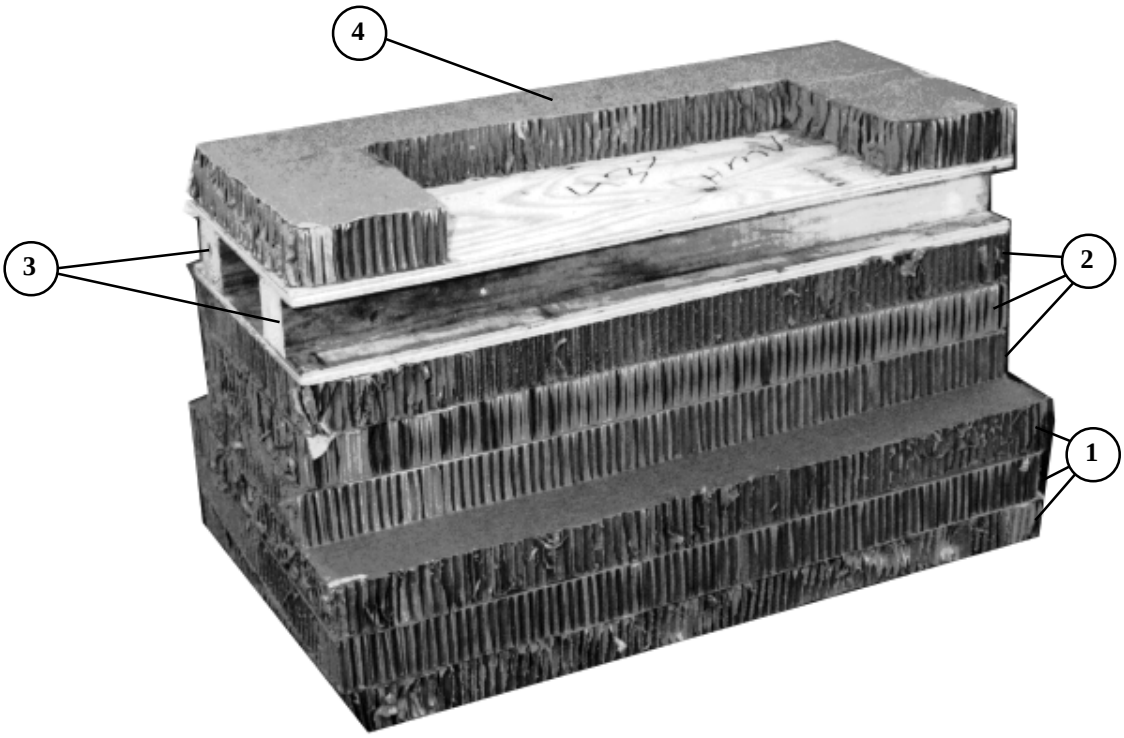

1. Glue three 43- by 26-inch pieces of honeycomb flush together to form a base.

2. Center and glue three 43- by 18-inch pieces of honeycomb flush on the base.

3. Nail a 43-inch piece of 4- by 4-inch lumber flush with each long side and 1 1/2 inches from each edge of a 3/4- by 43- by 18-inch piece of plywood. Nail a second 3/4- by 43- by 18-inch piece of plywood to the lumber and flush with the bottom piece of plywood. Glue the wood section of the stack flush on the honeycomb placed in step 2 above.

4. Make the cutout as shown in a 43- by 18-inch piece of honeycomb. Glue the honeycomb flush over the plywood.

Figure 4-3. Stack 2 prepared

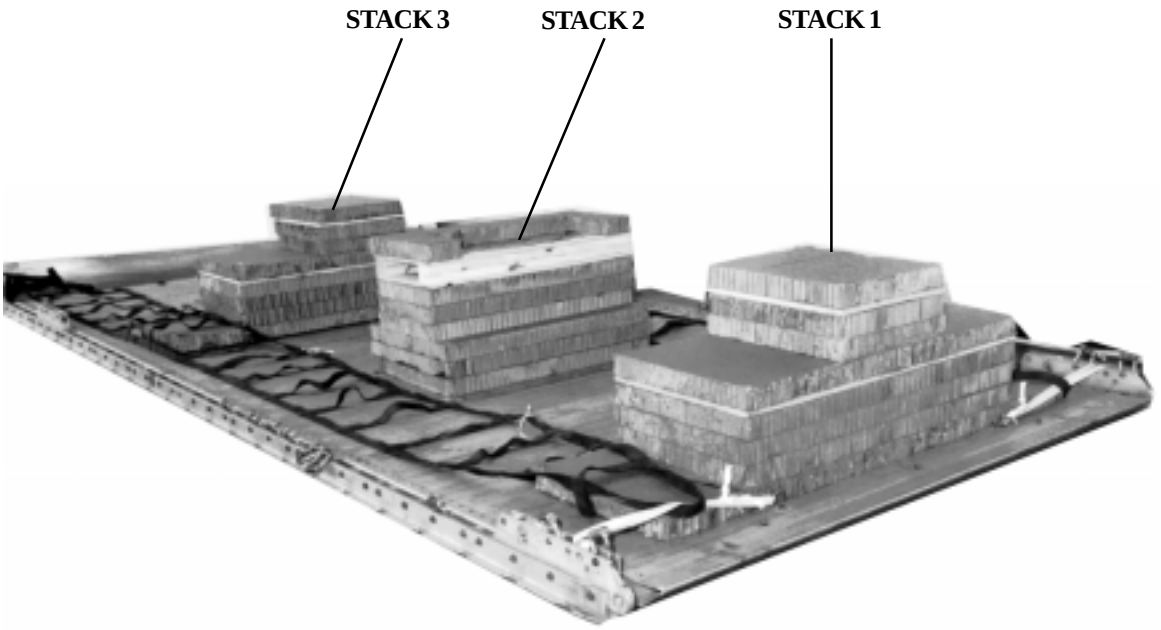

Note: The use of HDDS is optional.

Step:

1. Pass a 45-inch length of type Vwebbing or 1-inch tubular nylon webbing through the tie-down ring A-1, through a HDDS end loop, and through the second bushing on the right tandem link. Knot the webbing according to FM 10-500-2/TO 13C7-1-5.

2. Perform the same operation on the left side, using tie-down ring B1 and the second bushing on the left tandem link.

3. Position stack 1 centered and 6 inches from the front edge of the platform.

4. Position stack 2 centered and 35 inches from stack 1.

5. Position stack 3 centered and 45 inches from stack 2.

Note: Place the HDDS over stacks 1 and 3.

Figure 4-4. Drive-off aids installed and honeycomb stacks positioned

4-4. Preparing the CAV with the Communication Equipment

The basic preparation of the CAV is outlined in C2, FM 10-500-66/TO 13C7-25-71 for the two litter ambulance. In addition to the basic preparation, prepare the communication equipment as shown in Figure 4-5.

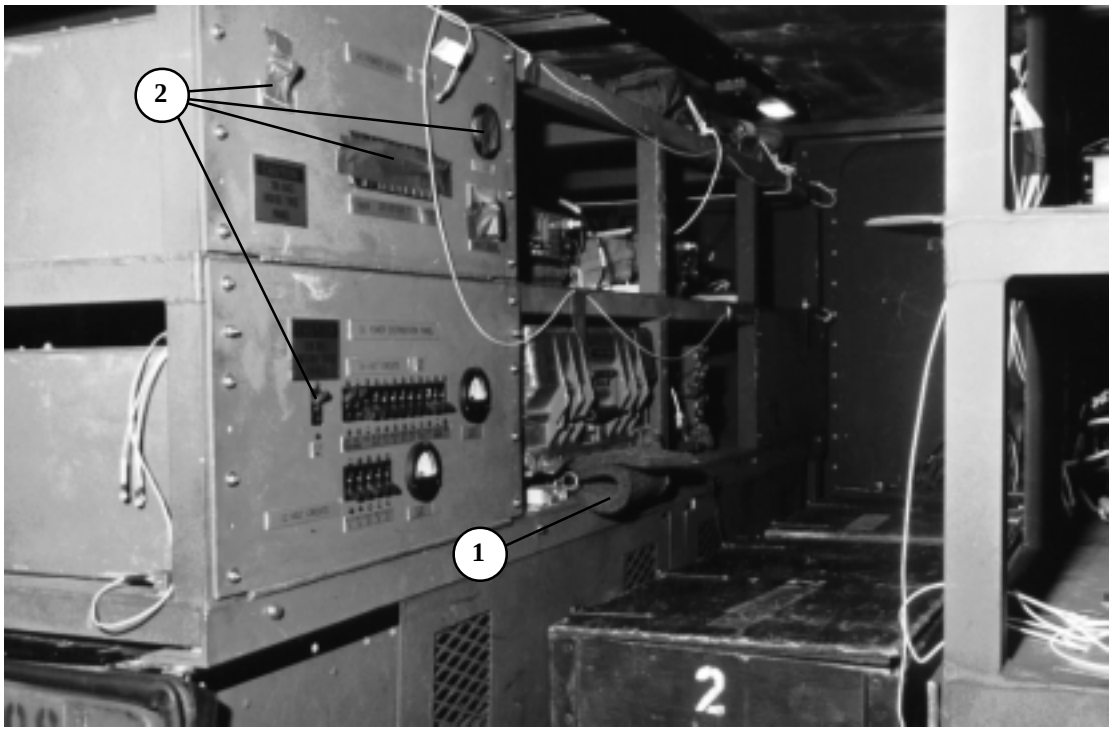

1 In the vehicle all communication equipment is bolted to the racks. There is a space under some of the units which rest on rubber shock absorbers. In these spaces cut sufficient size pieces of felt and place them under the communication unit filling the space.

2 Tape all AC and DC power switches and gauges.

Figure 4-5. CAV prepared with communication equipment

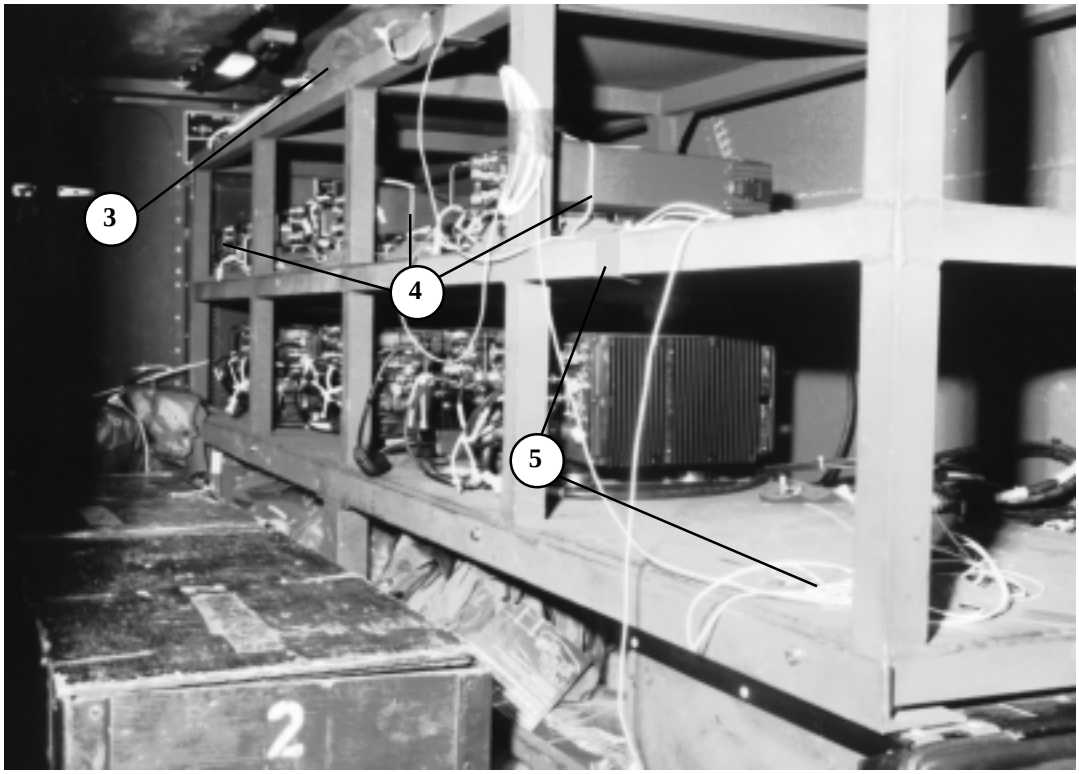

3 Place antennas on top of the rack and secure in place with tape.

4 Safety the communication units to the racks with lengths of type III nylon cord.

5 Tape any loose wires to the racks.

Figure 4-5. CAV prepared with communication equipment (continued)

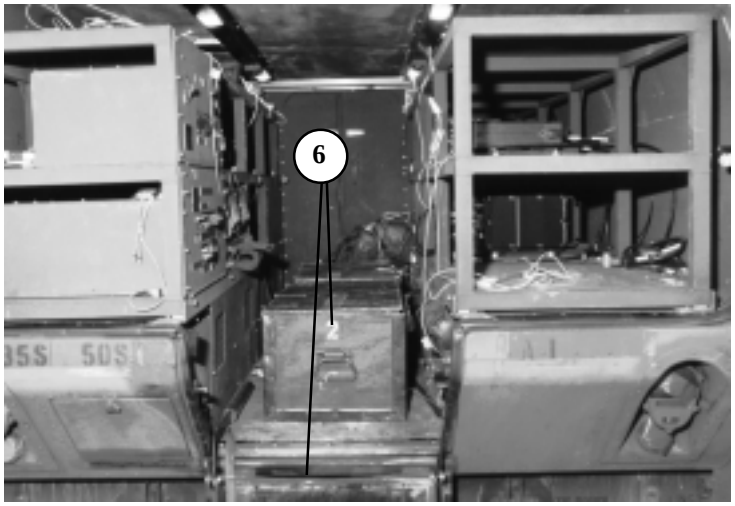

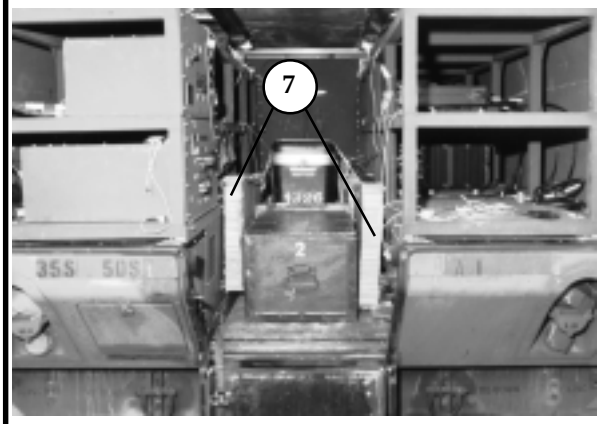

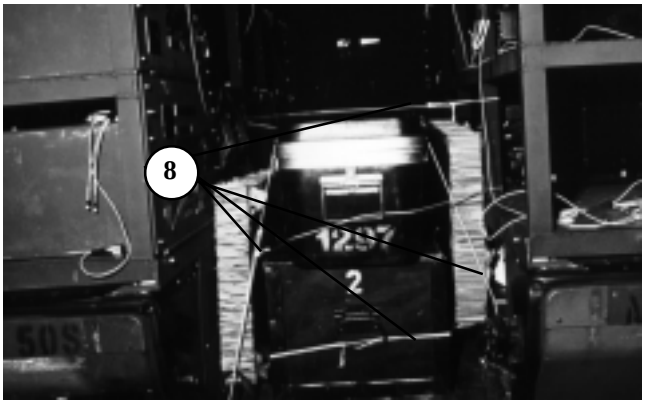

6 Tape or safety tie shut any equipment boxes and place them on the floor centered between the racks.

7 Cut pieces of honeycomb in sufficient sizes and place them between the equipment boxes and the racks.

8 Secure the boxes in place using type III nylon cord. Route the cord through any handles and over the boxes. Secure the cord to deck rings and convenient points in the vehicle.

Figure 4-5. CAV prepared with communication equipment (continued)

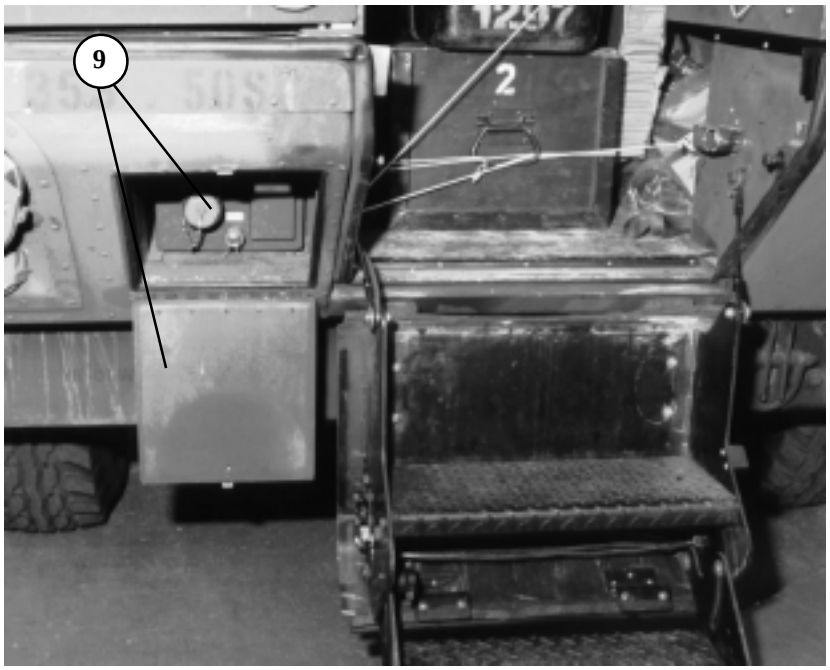

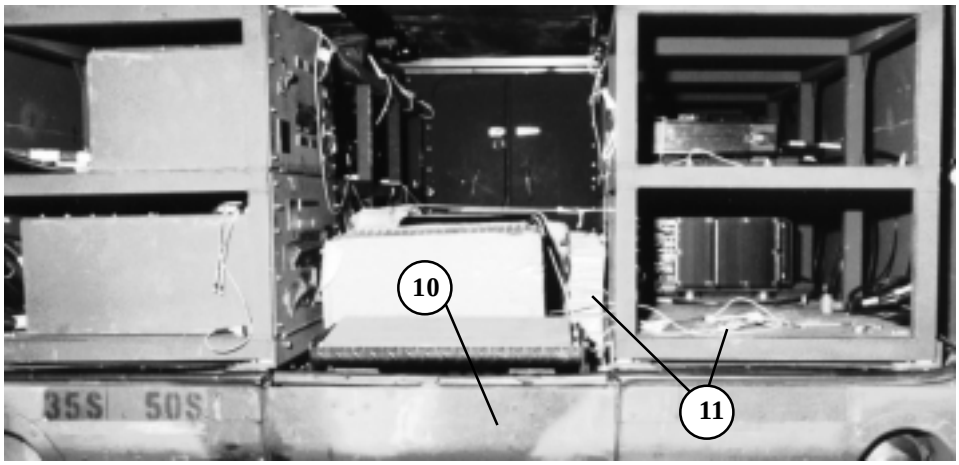

9 Open the AC power entry panel on the vehicle and make sure the cap is on the connection point. Close the panel and tape the latch.

10 Raise the steps. Close the rear vehicle door and secure.

11 Open the antenna entry panel on the right side of the vehicle and cut a piece of honeycomb to fit under the connection box. Fill the remaining space with layers of felt. Secure any loose cables and tape. Close and tape the latches of the panel shut.

Figure 4-5. CAV prepared with communication equipment (continued)

4-5. Lifting and Positioning CAV

Prepare the suspension sling spreader bar provided with the ambulance as shown in C2, FM 10-500-66/TO 13C7-25-71, Figure 2-15. Substitute an attitude control bar as a suspension sling spreader only if the spreader bar is not available. Install slings for lifting the ambulance and a suspension sling spreader bar for the rear lifting slings as shown in C2, FM 10-500-66/TO 13C7-25-71, Figure 2-16. Position the ambulance on the honeycomb stacks as shown in C2, FM 10-500-66/TO 13C7-25-71, Figure 2-17 and as shown below in Figure 4-6.

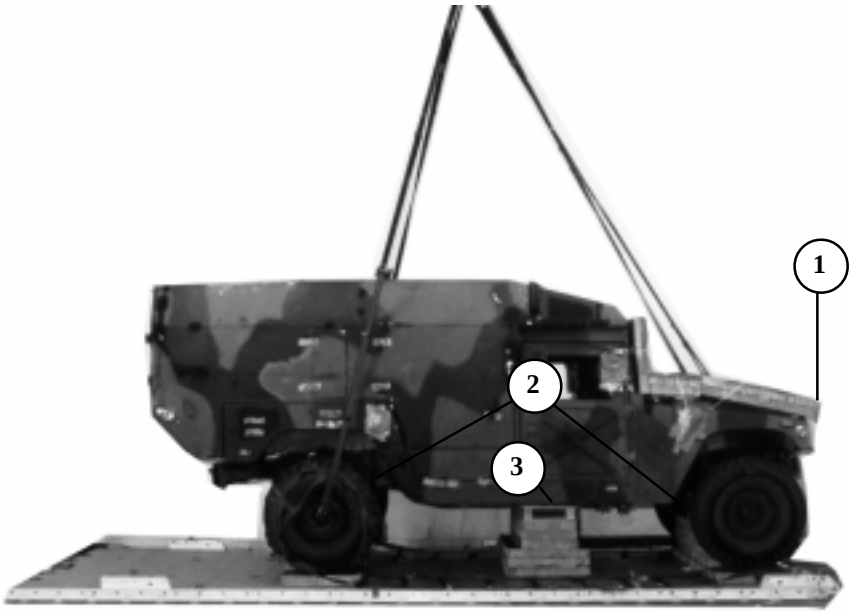

1. Center the ambulance on the platform with the front of the ambulance 2 inches from the front edge of the platform.
2. Make sure that the suspension cross members rest squarely on stacks 1 and 3.
3. Make sure that the frame rails rest squarely on stack 2.
4. Remove the lifting slings and the spreader bar or ACB (not shown).

Figure 4-6. CAV positioned on platform

4-6. Lashing CAV to Platform

Lash the load to the platform as shown in Figure 4-7.

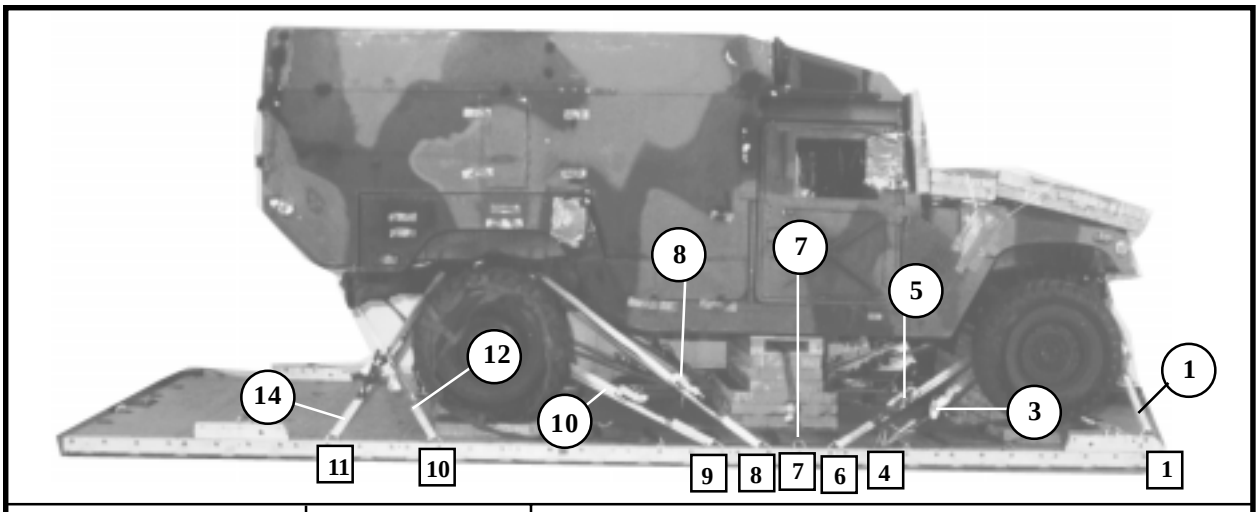

Lashing Number	Tiedown Clevis Number	Instructions
		Pass lashing:
1	1	Through tiedown bracket on end of right frame rail.
2	1A	Through tiedown bracket on end of left frame rail.
3	4	Around right lower control arm.
4	4A	Around left lower control arm.
5	6	Through tiedown bracket behind right front coil spring.
6	6A	Through tiedown bracket behind left front coil spring.
7	7 to7A	Through 7A and it's own D-ring. Run lashing between 4 x4's of stack 2 and secure to clevis 7.
8	8	Through tiedown bracket in front of right coil spring.
9	8A	Through tiedown bracket in front of left coil spring.
10	9	Around right lower control arm.
11	9A	Around left lower control arm.
12	10	Through right rear lifting shackle.
13	10A	Through left rear lifting shackle.
14	11	Through tiedown bracket behind right rear coil spring.
15	11A	Through tiedown bracket behind left rear coil spring.

Figure 4-7. CAV lashed to platform

4-7. Installing Suspension System

Install the suspension system as shown in C2, FM 10-500-66/TO 13C7-25-71, paragraph 2-8, and Figure 4-8 of this manual.

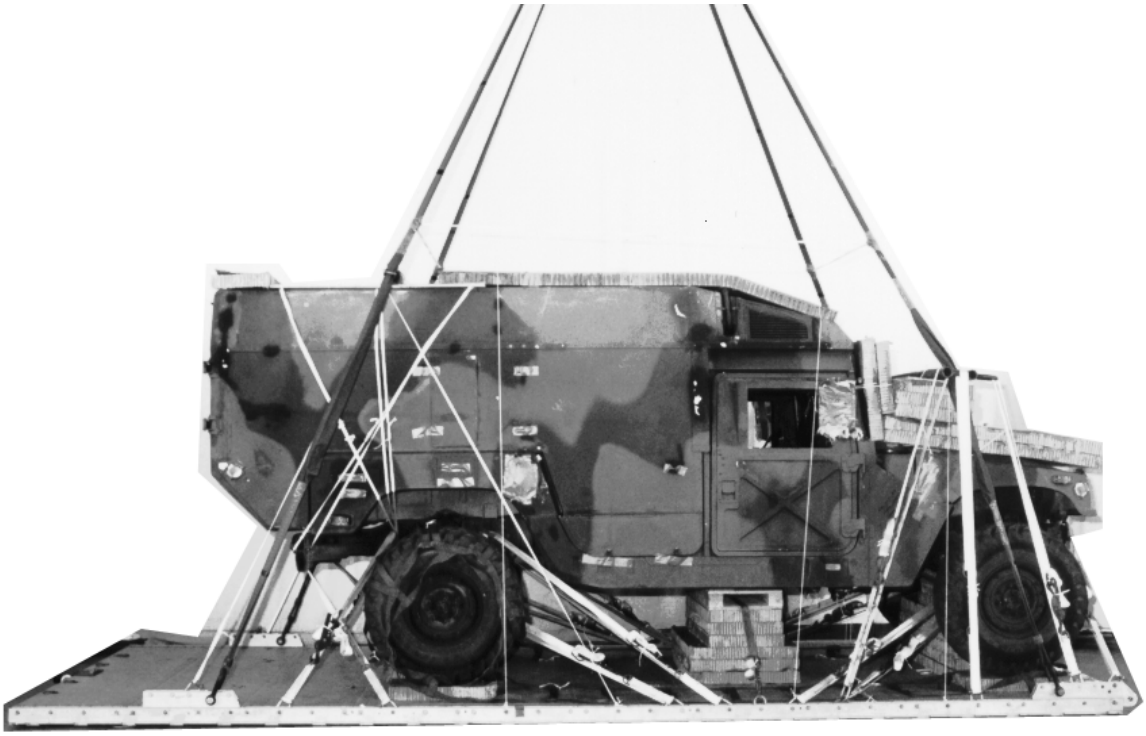

Figure 4-8. CAV's suspension system installed

4-8. Stowing Cargo Parachutes and Installing EFTC System

Prepare and install the parachute stowage platform as shown in Figure 4-9. Stow three G-11 cargo parachutes on the load according to FM 10-500-2/TO 13C7-1-5 and as shown in Figure 4-10. Install the EFTC system according to FM 10-500-2 and as shown in Figure 4-10.

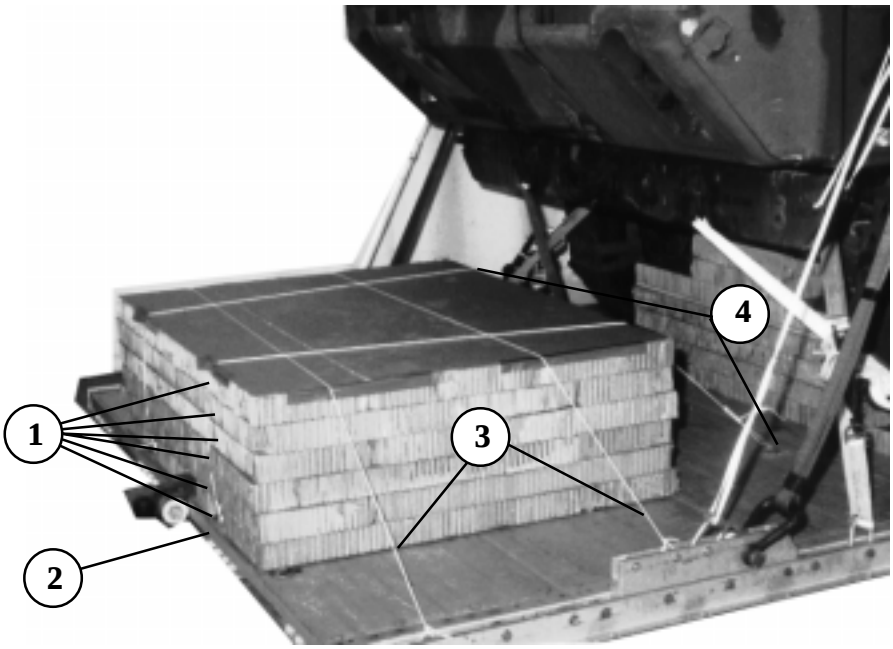

Note: Make a cutout for the extraction bracket on the bottom layer of honeycomb. This will allow bolt inspection.

1. Alternate six pieces of honeycomb 60- by 36 inches and six pieces 60- by 12-inches to make a six-layer stack 60 inches wide and 48 inches long. Glue the layers together.
2. Center the 60-inch edge flush with the rear edge of the platform.
3. Secure the stack to the platform with type III nylon cord tied to convenient clevises.
4. Secure the stack to tie-down rings.

Figure 4-9. CAV's parachute stowage platform prepared and installed

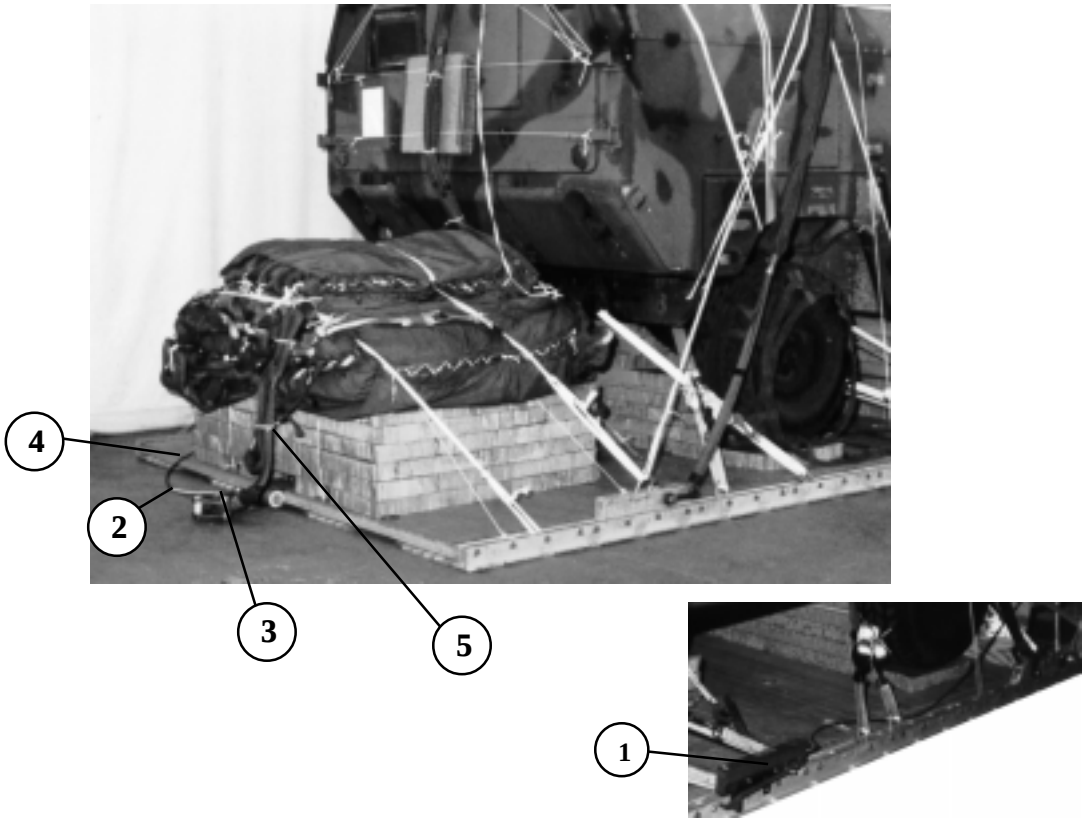

1. Install the actuator brackets to the rear holes in the left platform side rail.
2. Install the actuator and a 16-foot cable. Tie the cable to convenient points inside the lashings with type I, 1/4-inch cotton webbing.
3. Install the latch assembly and attach the cable.
4. Tie the cable to the left rear tie-down ring with type I, 1/4-inch cotton webbing.
5. Install a 9-foot (2-loop), type XXVI nylon webbing sling as a deployment line.

Figure 4-10. CAV's parachutes and EFTC system installed

4-9. Installing Parachute Release

Install an M-1 cargo parachute release according to FM 10-500-2/TO 13C7-1-5 and as shown in Figure 4-11.

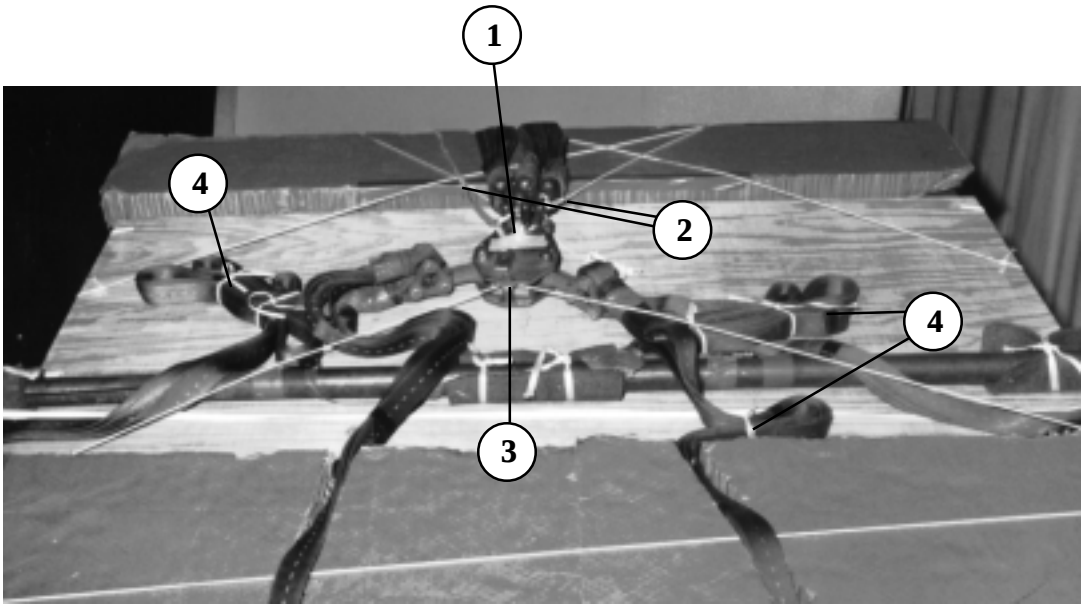

1. Center the release on the roof of the ambulance as shown. Connect the suspension slings and the riser extensions according to FM 10-500-2/TO 13C7-1-5.
2. Safety tie the connector links to the door hinges with type III nylon cord.
3. Safety tie the bottom of the release to the platform rails with type III nylon cord.
4. S-fold and tie any slack in the suspension slings with type I, 1/4-inch cotton webbing.

Figure 4-11. M-1 release installed

4-10. Placing Extraction Parachute

Select the extraction parachute and extraction line needed using the extraction line requirements table in FM 10-500-2/TO 13C7-1-5. Place the extraction line on the load for installation in the aircraft.

4-11. Installing Provisions for Emergency Restraints

Select and install the provisions for the emergency aft restraints according to the emergency aft restraint requirements table in FM 10-500-2/TO 13C7-1-5.

4-12. Marking Rigged Load

Mark the rigged load according to FM 10-500-2/TO 13C7-1-5 and as shown in Figure 4-12. Complete Shipper's Declaration for Dangerous Goods and affix to load. If the load varies from the one shown, the weight, height, CB, tip off curve, and parachute requirements must be recomputed.

4-13. Equipment Required

Use the equipment listed in Table 4-1 to rig the load shown in Figure 4-12.

CAUTION
Make the final rigger inspection required by FM 10-500-2/TO 13C7-1-5 before the load leaves the rigging site.

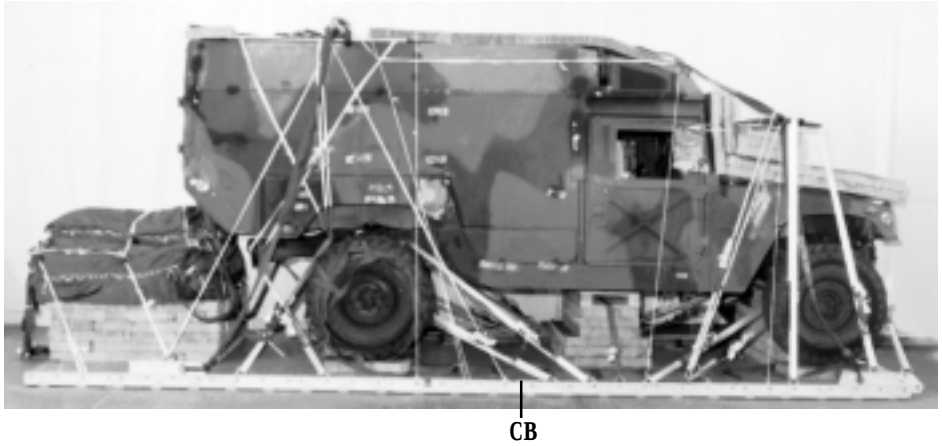

RIGGED LOAD DATA

Weight.....11, 680 pounds

Max Weight.....12,000 pounds

Height.....100 inches

Width.....108 inches

Length.....258 inches

Overhang: Front.....None

Rear.....0 inches

Center of Balance (CB)
(from front edge of the platform).....110 inches

Extraction System.....EFTC

Figure 4-12. CAV rigged on a 20-foot type V platform for low-velocity airdrop

Table 4-1. Equipment required for rigging the CAV rigged on a 20-foot, type V airdrop platform for low-velocity airdrop

National Stock Number	Item	
8040-00-273-8713	Adhesive, paste, 1-gal.	As required
1670-01-035-6054	Bridle (for line bag)	1
	Clevis, suspension:	
4030-00-090-5354	1-in (large)	2
4030-00-678-8562	3/4-in (medium)	5
8305-00-242-3593	Cloth, cotton duck, 60-in	As required
4020-00-240-2146	Cord, nylon, type III, 550-lb.	As required
1670-00-434-5787	Coupling, airdrop extraction force transfer cable, 20-ft	1
	Cover:	
1670-00-360-0328	Clevis, large	3
1670-00-360-0329	Link, type IV	3
8135-00-664-6958	Cushioning material, packaging, cellulose wadding	As required
8305-00-958-3685	Felt, 1/2-in thick	As required
1670-01-183-2678	Leaf, extraction line (line bag)	3
	Line extraction:	
1670-01-062-6313	60-ft (3-loop), type XXVI (C-130)	1
1670-01-107-7651	140-ft (3-loop), type XXVI (for C-141,C-5 or C-17)	1
1670-01-064-4452	60-ft (1-loop), type XXVI with towplate link (for C-17) Drogue Line	1
	Link assembly:	
1670-00-783-5988	Type IV	6
	Two-point:	
5306-00-435-8994	Bolt, 1-in diam, 4-in long	2
5310-00-232-5165	Nut, 1-in, hexagonal	2
1670-00-003-1953	Plate, side, 3 3/4-in	2
5365-00-007-3414	Spacer, large	2
5315-00-010-4659	Nail, steel wire, 8d	As required
1670-00-753-3928	Pad, energy-dissipating, (honeycomb),	
	3- by 36- by 96-in:	20 sheets
	Parachute, cargo	
1670-01-016-7841	G-11B	3
	Parachute, cargo extraction	
1670-01-063-3716	22-ft	1
	Drogue (for C-17)	
1670-01-063-3715	15-ft	1
	Platform, airdrop, type V, 20-ft:	1
1670-01-162-2372	Clevis, assembly (type V)	(30)
1670-01-353-8424	Extraction bracket assembly	(1)
1670-01-353-8425	Bracket assembly, coupling	(1)
1670-01-247-2389	Suspension link	(2)
1670-01-162-2381	Tandem link assembly (Multipurpose link)	(2)
	Lumber:	
5510-00-220-6146	2- by 4- by:	As required
5510-00-220-6148	2- by 6- by:	As required
5530-00-128-4981	Plywood, 3/4-in:	4 sheets

Table 4-1. Equipment required for rigging the CAV rigged on a 20-foot, type V airdrop platform for low-velocity airdrop (continued)

National Stock Number	Item	Quantity
1670-01-097-8816	Release, cargo parachute, M-1	1
	Sling, cargo, airdrop:	
	For suspension:	
1670-01-062-6302	20-ft (2-loop), type XXVI	4
	For lifting:	
1670-01-062-6301	3-ft (2-loop), type XXVI	2
1670-01-062-6303	12-ft (2-loop), type XXVI	2
1670-01-063-7761	16-ft (2-loop), type XXVI	2
	For deployment:	
1670-01-062-6304	9-ft (2-loop), type XXVI	1
	For riser extension:	
1670-01-062-6302	20-ft (2-loop), type XXVI	6
1670-00-040-8219	Strap, parachute release, multi-cut, comes with 3 knives	2
7501-00-266-5016	Tape, adhesive, 2-in	As required
1670-01-344-0825	Vehicle drive-off aid (HDDS)	1
1670-00-937-0271	Tiedown assembly, 15-ft	36
	Webbing:	
8305-00-268-2411	Cotton, 1/4-inch, type I	As required
8305-00-082-5752	Nylon, tubular 1/2-in	As required
8305-00-263-3591	Type VIII	As required

CHAPTER 5

RIGGING THE M998 CARGO/TROOP CARRIER (TWO SEATER) WITH GRC/206 AIR FORCE PALLET ON A 16-FOOT, TYPE V PLATFORM FOR LOW-VELOCITY AIR-DROP

5-1. Description of Load

The M998 cargo/troop carrier (Figure 5-1) is 180 inches long without a winch. The height is 83 1/2 inches, reducible to 71 1/2 inches. The width is 86 1/2 inches. The truck weighs 5,990 pounds with radio equipment GRC/206 Air Force pallet. Other equipment included on the load is the 1.5-kilowatt, 28-VDC generator set; two cable spools; two 5-gallon fuel cans; and one 5-gallon water can. The truck weighs 6,990 pounds with tank 3/4 full of fuel and equipment installed. The load requires two G-ll cargo parachutes.

5-2. Preparing Platform

Prepare a 16-foot, type V airdrop platform as shown in Figure 5-2.

NOTES:
1. The nose bumper may or may not be installed.
2. Measurements given in this load are from the front edge of the platform, NOT from the front edge of the nose bumper.

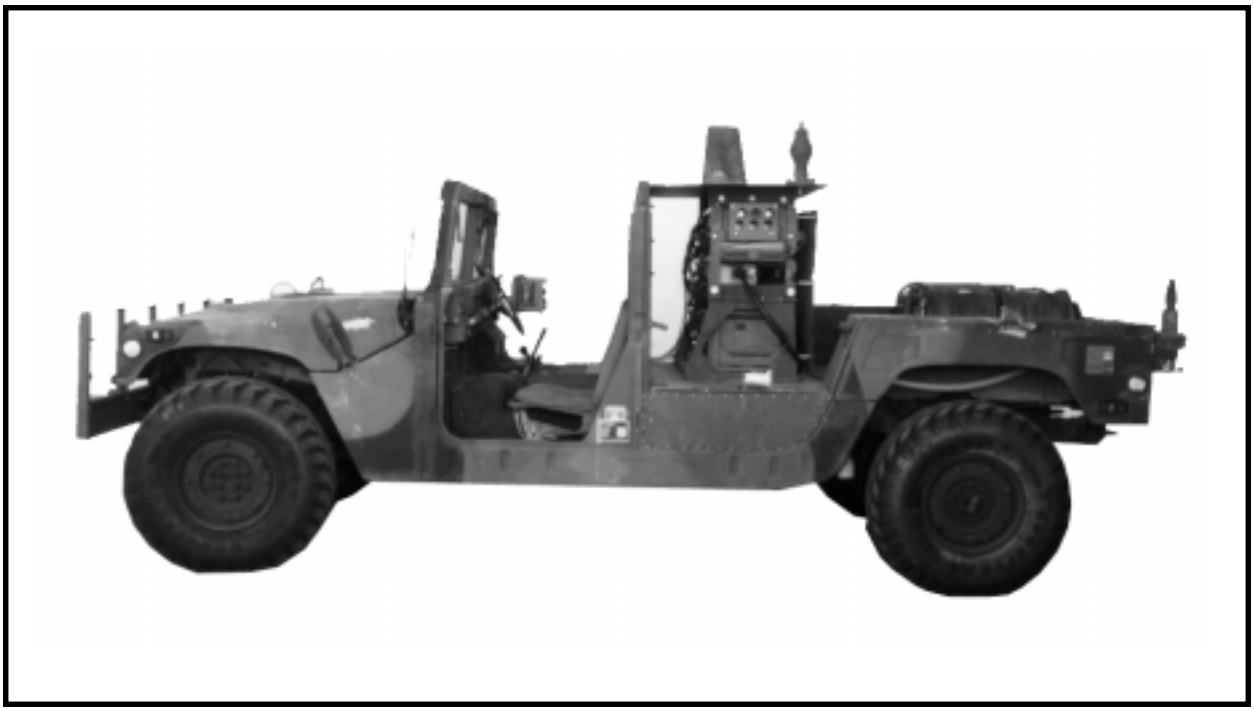

Figure 5-1. M998 cargo/ troop carrier

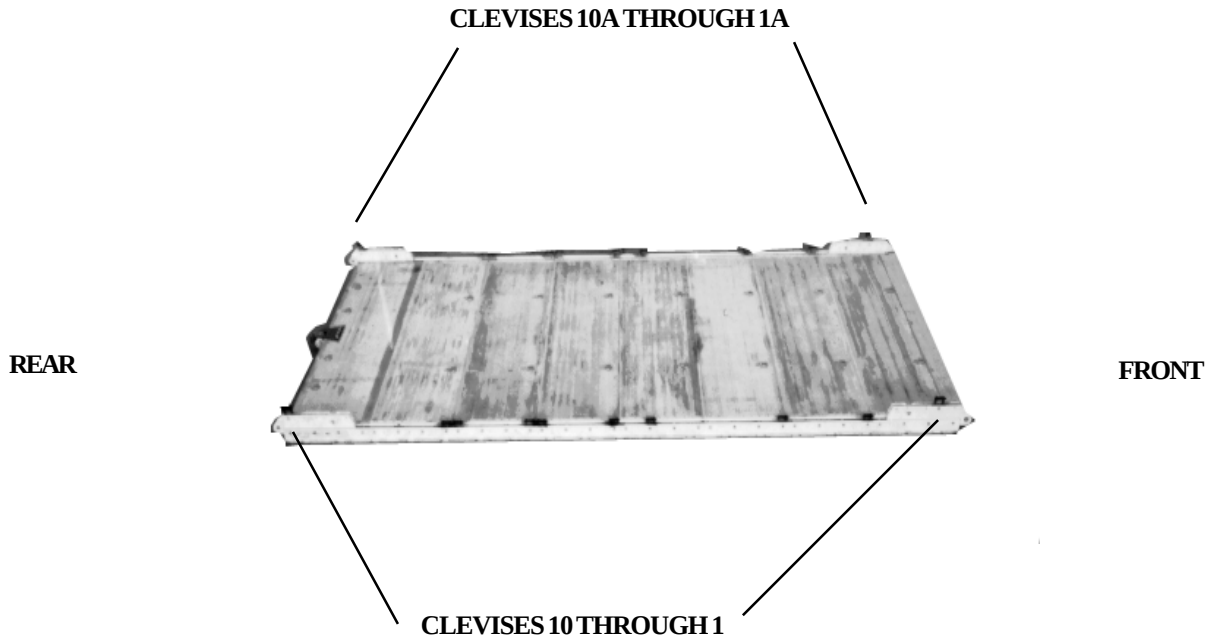

Step:

1. Inspect, or assemble and inspect, a 16-foot, type V airdrop platform as outlined in TM 10-1670-268-20&P/TO 13C7-52-22.

2. Install a tandem link to the front of each platform side rail using holes 1, 2, and 3.

3. Install a clevis on bushing 2 of each tandem link.

4. Install a tandem link on the rear of each platform side rail using holes 30, 31, and 32.

5. Install a clevis on bushing 4 of each rear tandem link.

8. Starting at the front of each platform side rail, install clevises on the bushings bolted to holes 5, 9, 15, 17, 20, 21, 25, and 27.

9. Starting at the front of the platform, number the clevises 1 through 10 on the right side, and 1A through 10A on the left side.

10. Label the tie-down rings according to FM 10-500-2/TO 13C7-1-5.

Figure 5-2. Platform prepared

5-3. Building and Placing the Honeycomb Stacks

Build the honeycomb stacks as shown in Figures 5-3 and 5-4. Place the stacks on the platform as shown in Figure 5-5.

NOTICE OF EXCEPTION

The honeycomb stack configuration in this chapter is that of the original load and not the newer stack configuration as shown in chapter 4.This Air Force load has never been tested and written using the newer honeycomb stack configuration. Use this configuration until a change is tested and published for this load.

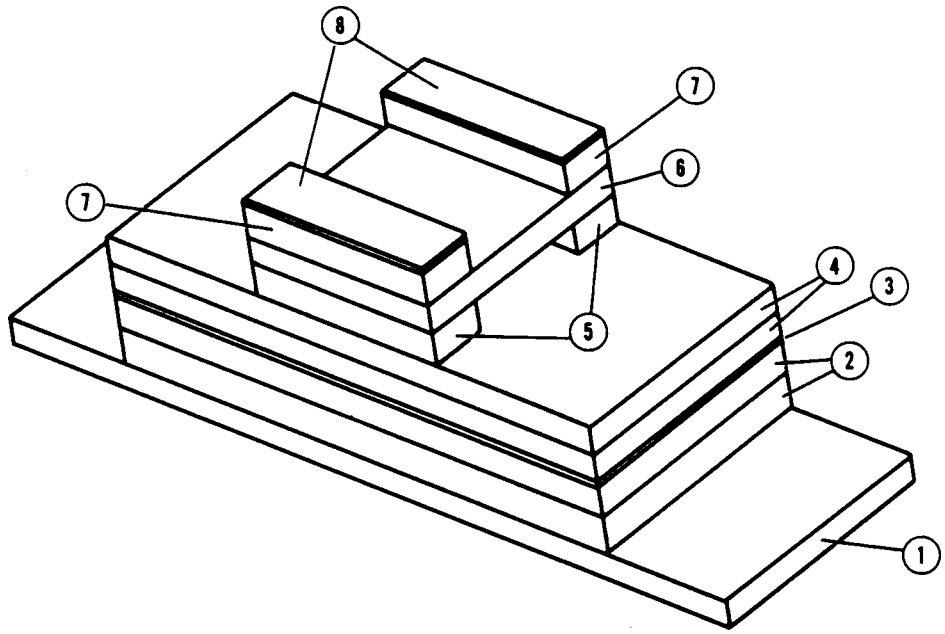

1. Use an 80- by 24-inch piece of honeycomb to form a base.
2. Center three 54- by 24-inch pieces of honeycomb on the base.
3. Place a 3/4- by 54- by 24-inch piece of plywood over the honeycomb placed in step 2 above.
4. Place one 54- by 24-inch piece of honeycomb on top of the plywood placed in step 3 above.
5. Center one 20- by 6-inch piece of honeycomb even with the front edge. Center one 20- by 6-inch piece of honeycomb even with the rear edge.
6. Place a 20- by 24-inch piece of honeycomb flush over the pieces of honeycomb placed in step 5 to form a bridge.
7. Place one 20- by 6-inch piece of honeycomb flush with the front edge. Place one 20- by 6-inch piece of honeycomb flush with the rear edge.
8. Place a 3/4- by 20- by 6-inch piece of plywood on top of each piece of honeycomb placed in step 7.
9. Repeat steps 1 through 8 for stack 3.

Figure 5-3. Stacks 1 and 3 prepared

Note: These drawings are not drawn to scale.

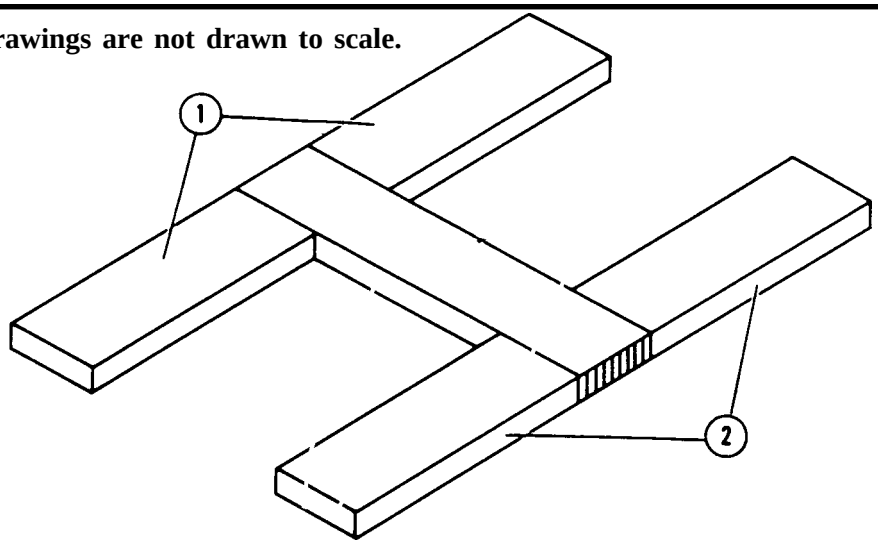

1. Place two 12- by 22-inch pieces of honeycomb perpendicular to a 42- by 10-inch piece of honeycomb flush with one of its ends.

2. Place two 12- by 22-inch pieces of honeycomb perpendicular to the other end of the 42- by 10-inch piece of honeycomb.

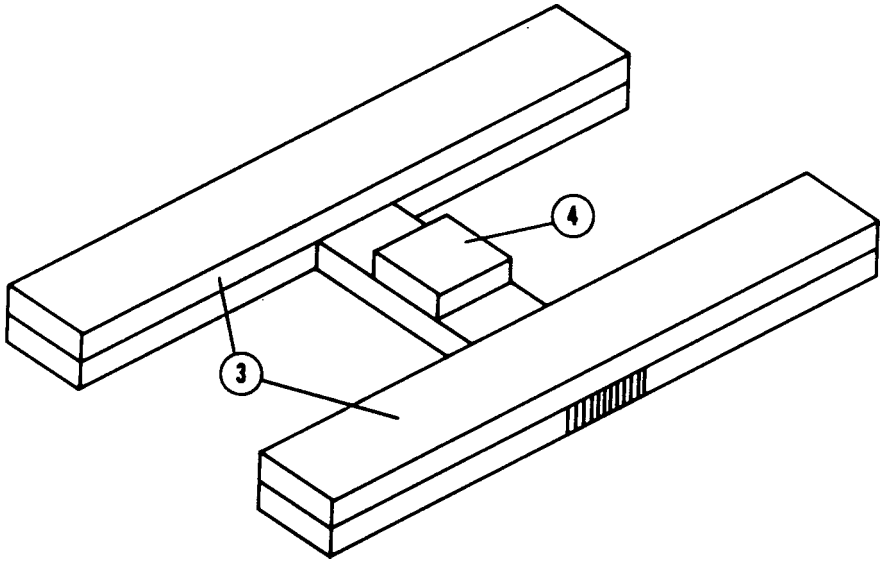

3. Place a 12- by 54-inch piece of honeycomb on each side of the base.

4. Center a 10- by 10-inch piece of honeycomb on the bridge placed in step 1.

Figure 5-4. Stack 2 prepared

Note: These drawings are not drawn to scale.

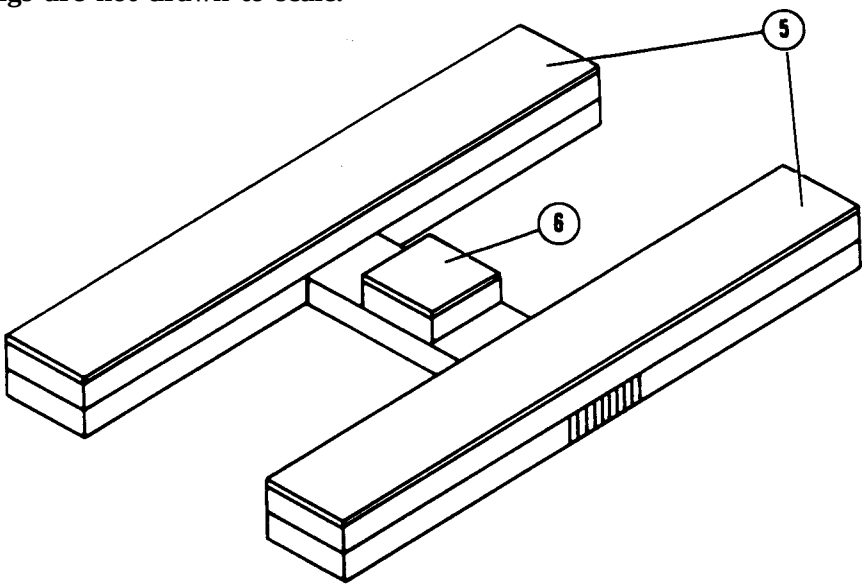

5 Place a 3/4- by 12- by 54-inch piece of plywood flush over each side of the stack.

6 Place a 3/4- by 10- by 10-inch piece of plywood flush over the honeycomb placed in step 4.

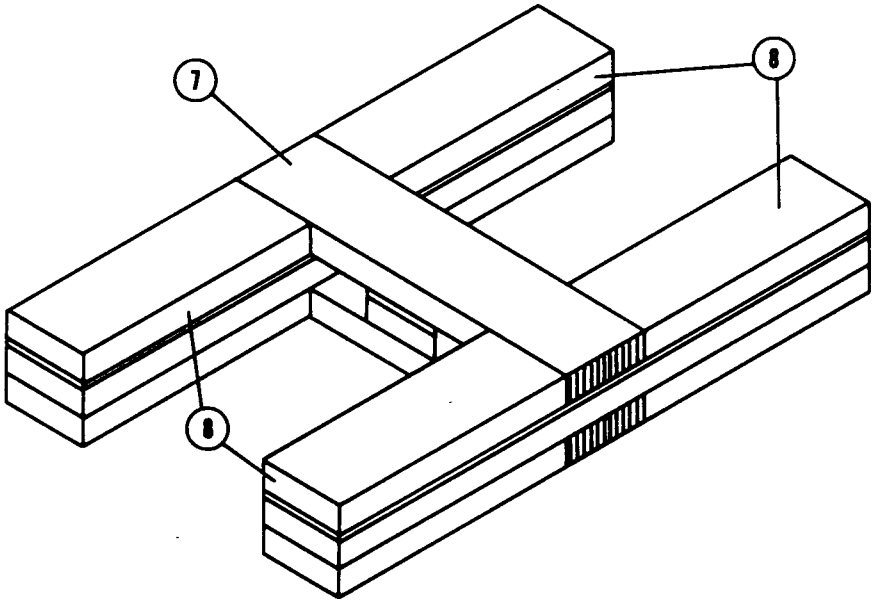

7 Place a 42- by 10-inch piece of honeycomb flush over the bridge.

8 Place a 12- by 22-inch piece of honeycomb flush over each leg perpendicular to the bridge.

Figure 5-4. Stack 2 prepared (continued)

Note: These drawings are not drawn to scale.

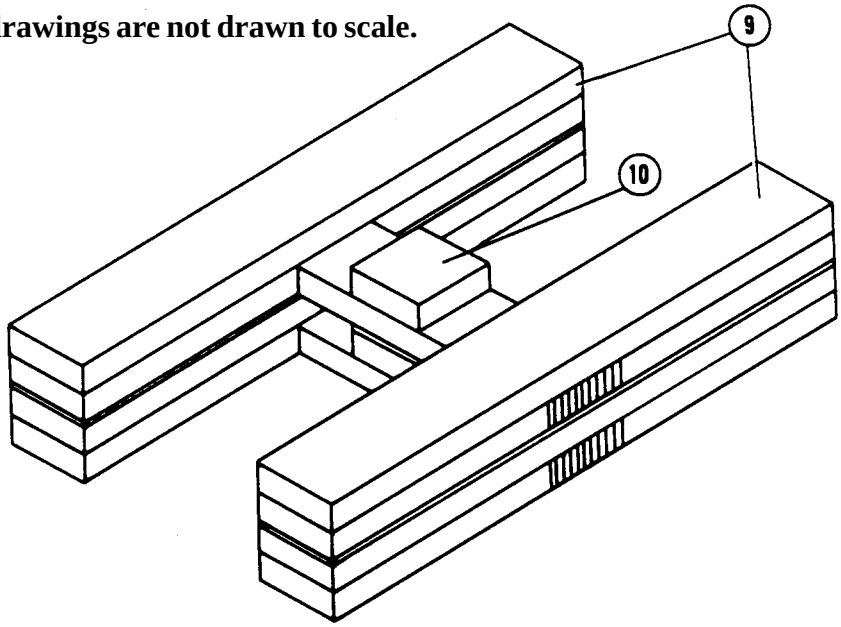

9 Place a 12- by 54-inch piece of honeycomb flush over each side of the stack.

10 Center a 10- by 10-inch piece of honeycomb over the bridge.

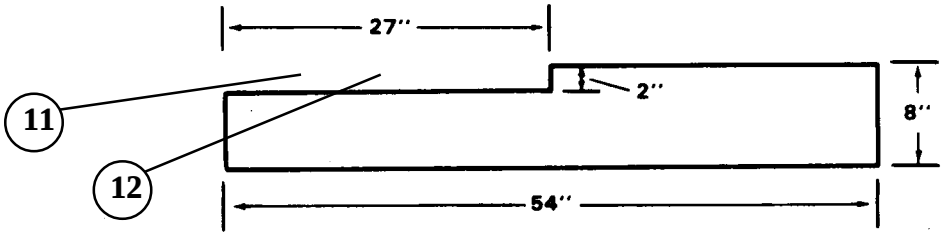

11 Make cutouts as shown in six 8- by 54-inch pieces of honeycomb.

12 Make the same cutouts in two 3/4- by 8- by 54-inch pieces of plywood.

Figure 5-4. Stack 2 prepared (continued)

Note: These drawings are not drawn to scale.

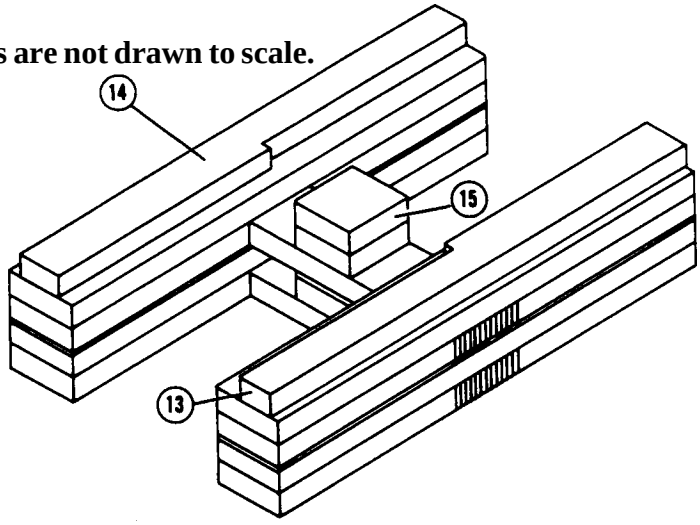

13 Center one piece of honeycomb cut in step 11 over the right side of the stack so that the cutout is to the rear as shown.

14 Center one piece of honeycomb cut in step 11 over the left side of the stack so that the cutout is to the front as shown.

15 Center a 10- by 10-inch piece of honeycomb over the bridge.

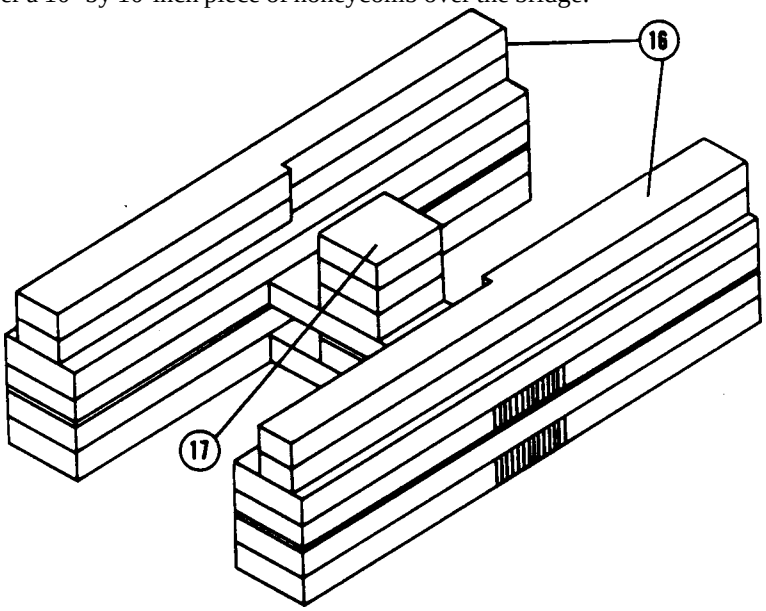

16 Place a piece of the honeycomb cut in step 11 flush over each side of the stack so that the cutouts are aligned.

17 Place a 10- by 10-inch piece of honeycomb flush over the bridge.

Figure 5-4. Stack 2 prepared (continued)

Note: These drawings are not drawn to scale.

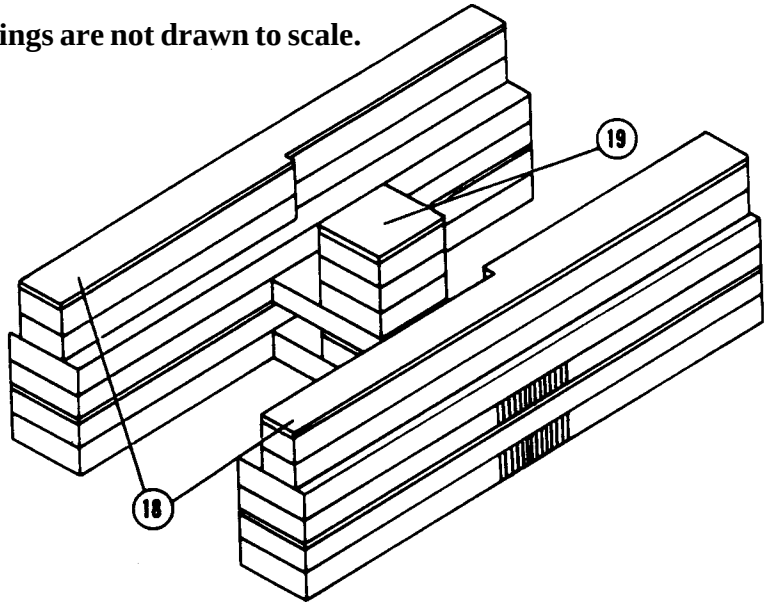

18 Place a piece of plywood cut in step 12 flush over each side of the stack so that the cutouts are aligned.

19 Place a 10- by 10-inch piece of plywood flush over the bridge.

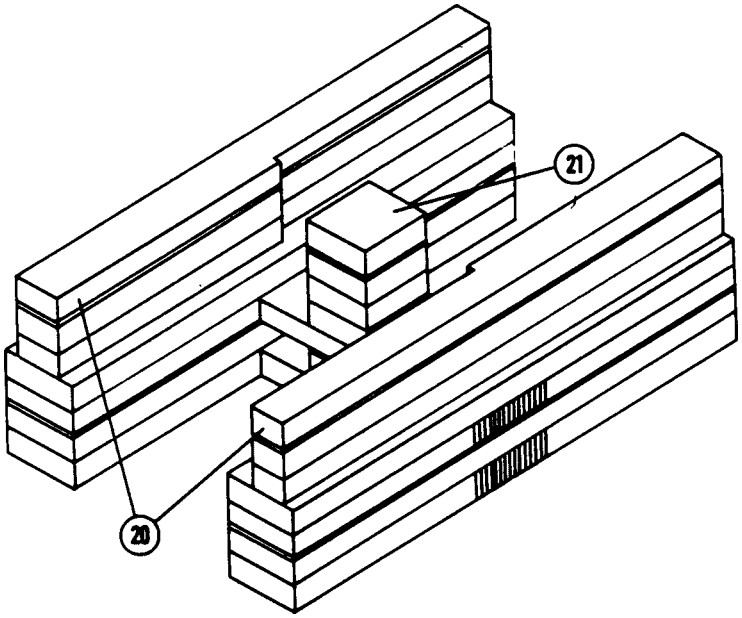

20 Place a piece of honeycomb cut in step 11 flush over each side of the stack so that the cutouts are aligned.

21 Center a 10- by 10-inch piece of honeycomb flush over the bridge.

Figure 5-4. Stack 2 prepared (continued)

Note: These drawings are not drawn to scale.

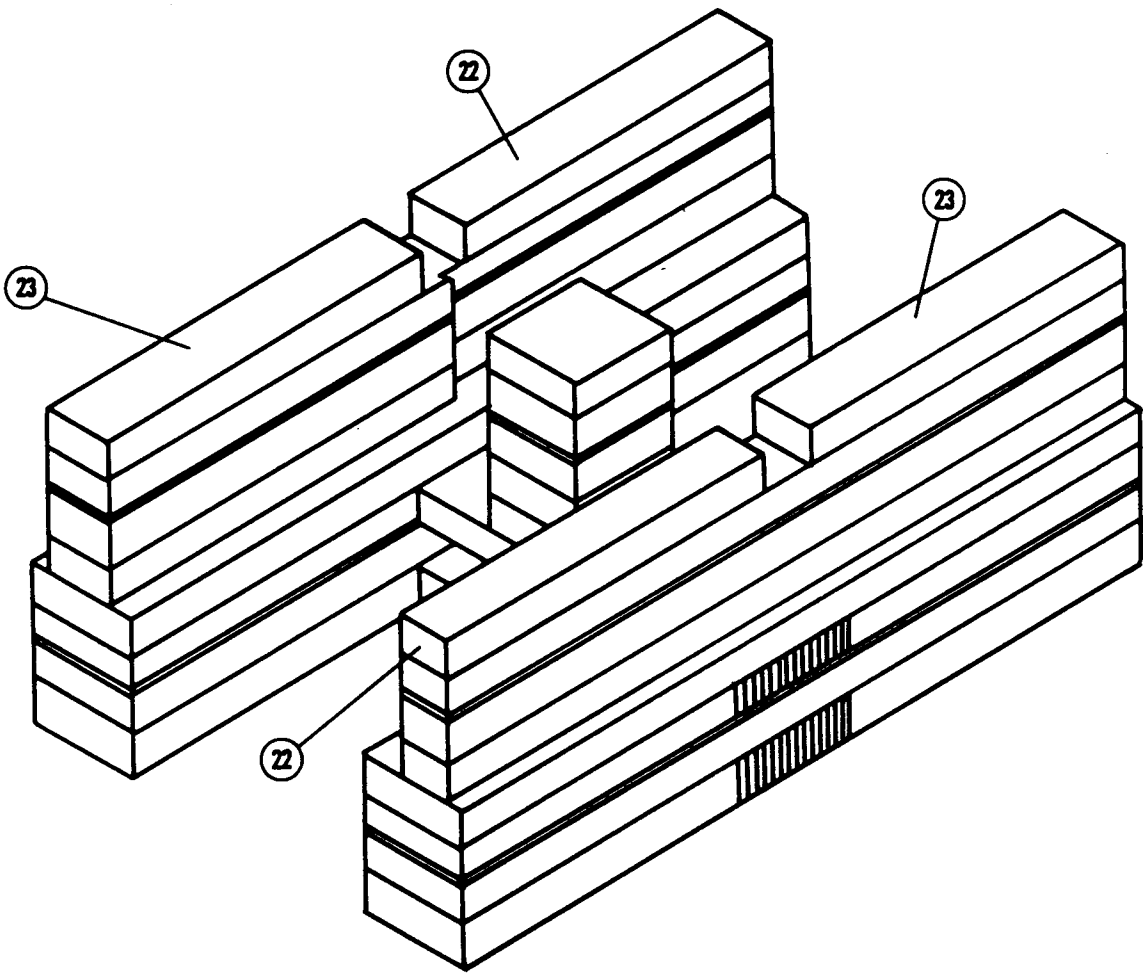

22 Place a 6- by 24-inch piece of honeycomb flush with the left front edge of the stack. Place a 6- by 24-inch piece of honeycomb flush with the right rear edge of the stack.

23 Place an 8- by 24-inch piece of honeycomb flush with the right front edge of the stack. Place an 8- by 24-inch piece of honeycomb flush with the left rear edge of the stack.

Figure 5-4. Stack 2 prepared (continued)

Note: These drawings are not drawn to scale.

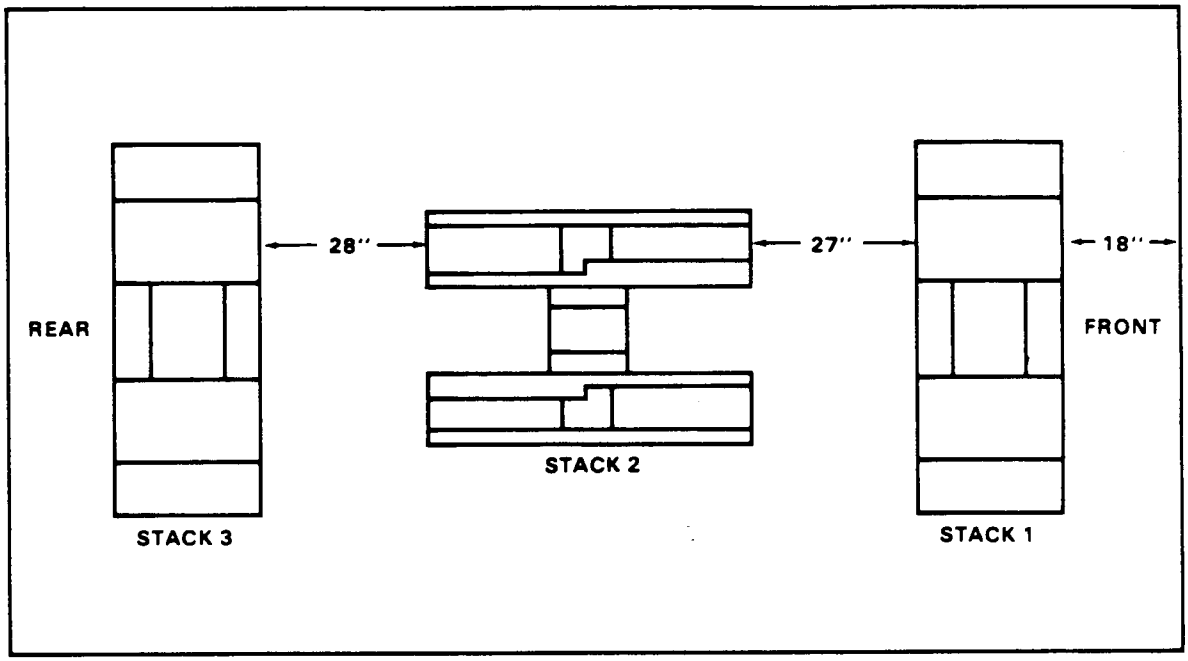

Stack Number	Position of Stack on Platform
	Place stack:
1	18 inches from the front edge of the platform and centered.
2	27 inches behind stack 1 and centered.
3	28 inches behind stack 2 and centered.

Figure 5-5. Honeycomb stacks positioned on platform

5-4. Preparing Truck and Installing Lifting Slings

Prepare the truck as described below and as shown in Figures 5-6 through 5-15 and C5, FM 10-517/TO13C7-1-111, paragraph 2-4. Install the lifting slings as shown in Figure 5-16 and according to C5, FM 10-517/ TO 13C7-1-111 paragraph 2-7.

a. Make sure the fuel tank is not more than 3/4 full.

b. Remove the top cover and front doors.

c. Tape all lights, reflectors, and gauges.

d. Tape the windshield.

Note: This truck has a bumper grill protector that may not be on all Air Force M998s.

NOTICE OF EXCEPTION

The up position of the windshield configuration in this chapter is that of the original load and not the newer down windshield configuration as shown in chapter 3. This Air Force load has never been tested and written using the newer windshield down configuration. Use this configuration until a change is tested and published for this load.

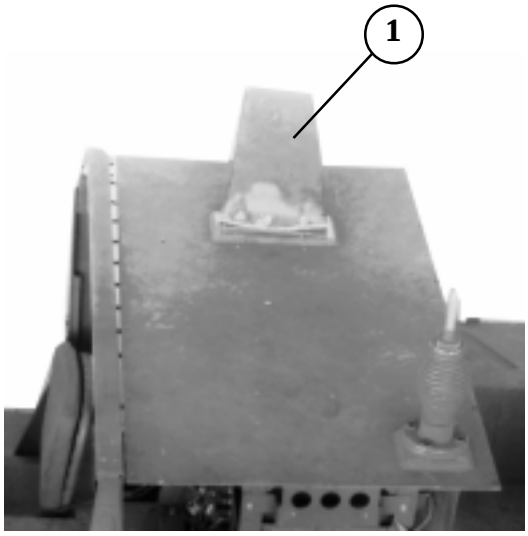

1 Remove the FM and dual VHF/UHF antennas or shark fins. Place the bolts back in their holes, and secure them with tape.

2 Cover the cable ends with their cap or a piece of tape. (Not shown)

3 Remove the HF antenna mount. Place the bolts back in their holes, and secure them with tape. (Not shown)

Figure 5-6. Antennas prepared

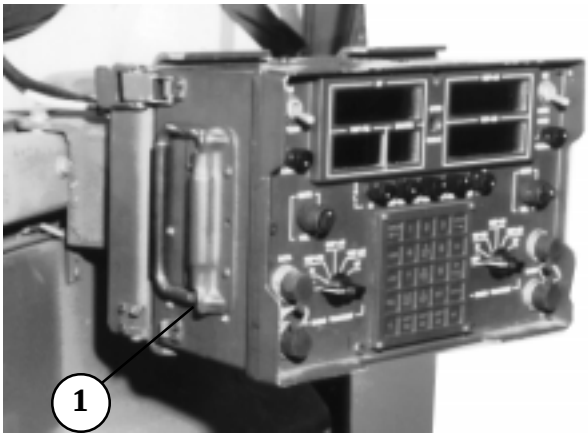

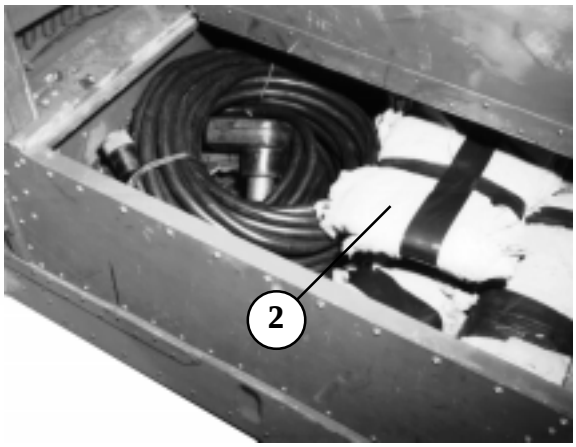

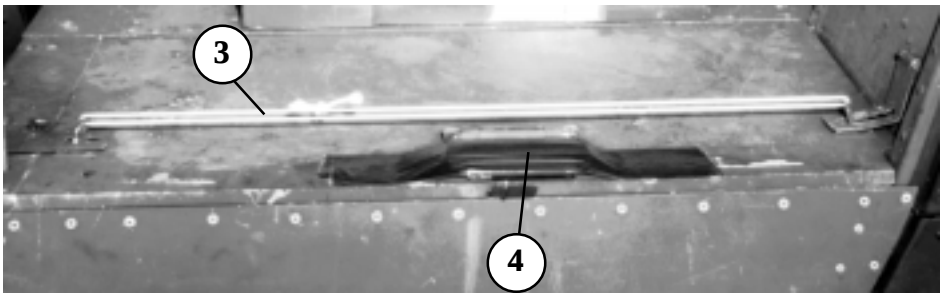

1 Remove the first RSC from the mounting bracket on the dash and the second RSC (not shown) from the tool storage box.

2 Wrap both RSCs and antennas in cellulose wadding. Coil all cables, and secure them with type III nylon cord or tape. Place the RSCs, antennas, and cables in the tool storage box. Also place the antenna mounts, roll of wire, slave cable, generator power cable, and any classified equipment that may be needed with the radios in the tool storage box. Fill empty areas with scrap pieces of honeycomb.

3 Close the tool storage box door, and safety the latches together with type III nylon cord.

4 Tape the tool storage box handle down.

Figure 5-7. RSC secured

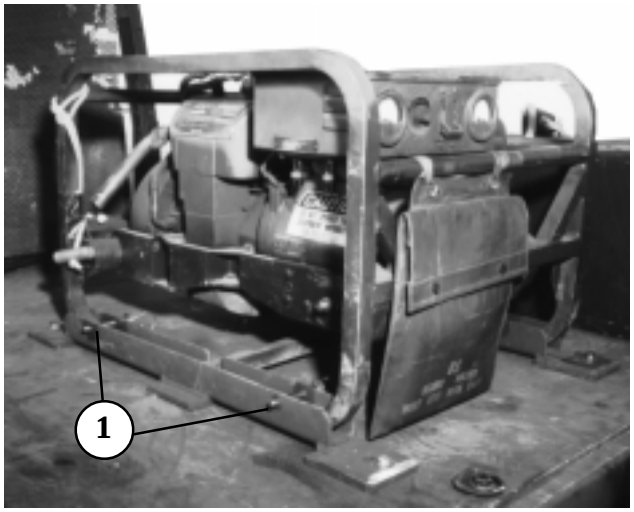

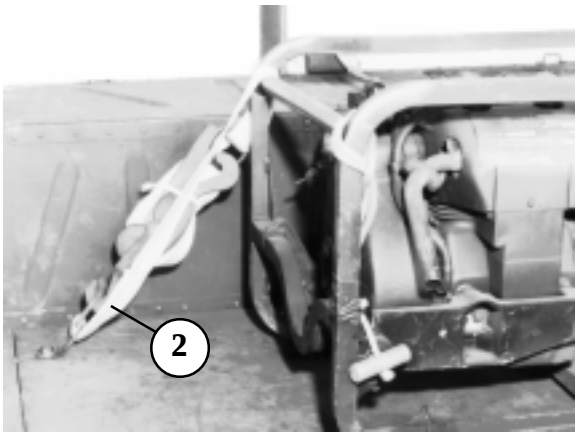

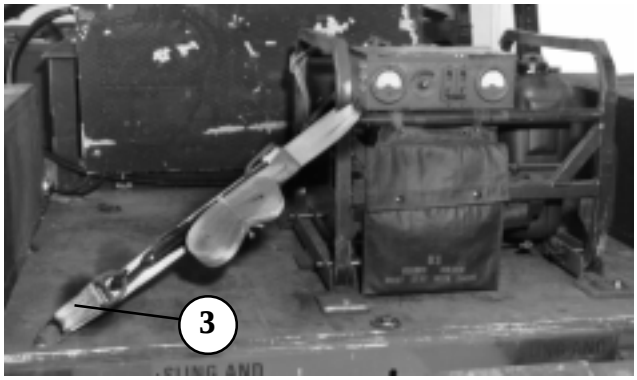

1 Place the generator in its rack, and install the safety pins.

2 Pass a 15-foot tiedown strap through the left rear D-ring of the cargo bed to the left rear side of the generator frame. Secure the ends with a D-ring and a load binder.

3 Pass a 15-foot tiedown strap through the right front D-ring of the cargo bed to the right front side of the generator frame. Secure the ends with a D-ring and a load binder.

Figure 5-8. Generator secured

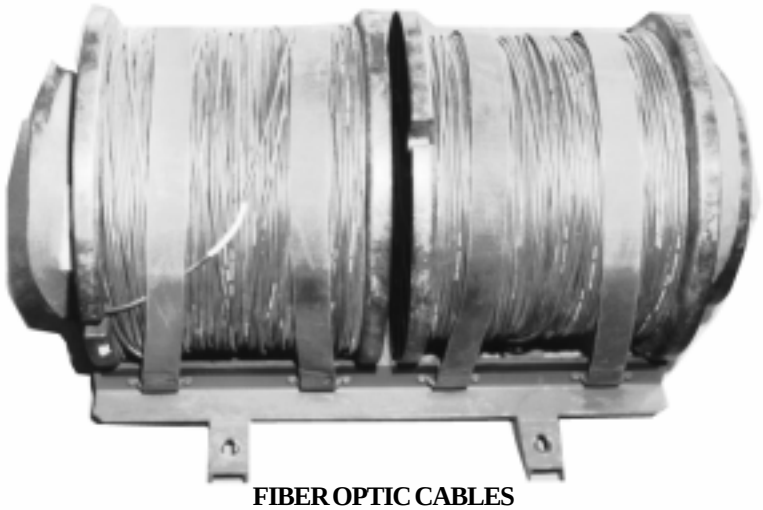

FIBER OPTIC CABLES

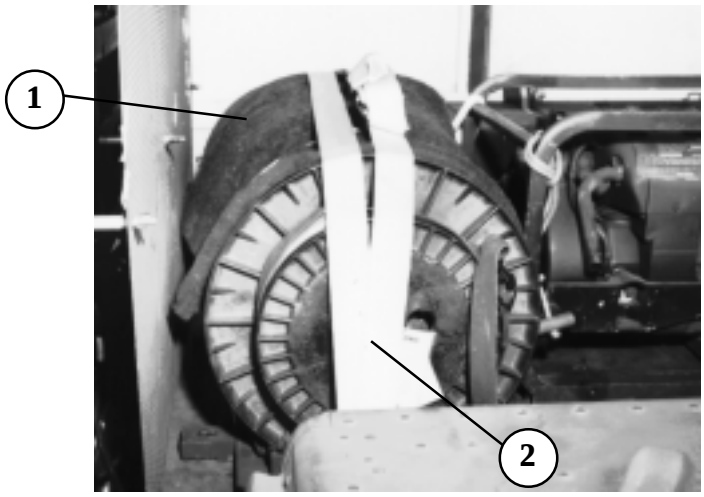

1 Wrap the fiber optic cables with a 28- by 36-inch piece of felt. Secure the felt with type III nylon cord.

2 Position the optic cable reels in front of the generator. Run a 15-foot tiedown strap through the left front D-ring of the cargo bed, over the top of the optic cable reels, through the right front D-ring, and back over the top of the optic cable reels. Secure the ends together with a D-ring and a load binder.

Figure 5-9. Optic cable reels secured

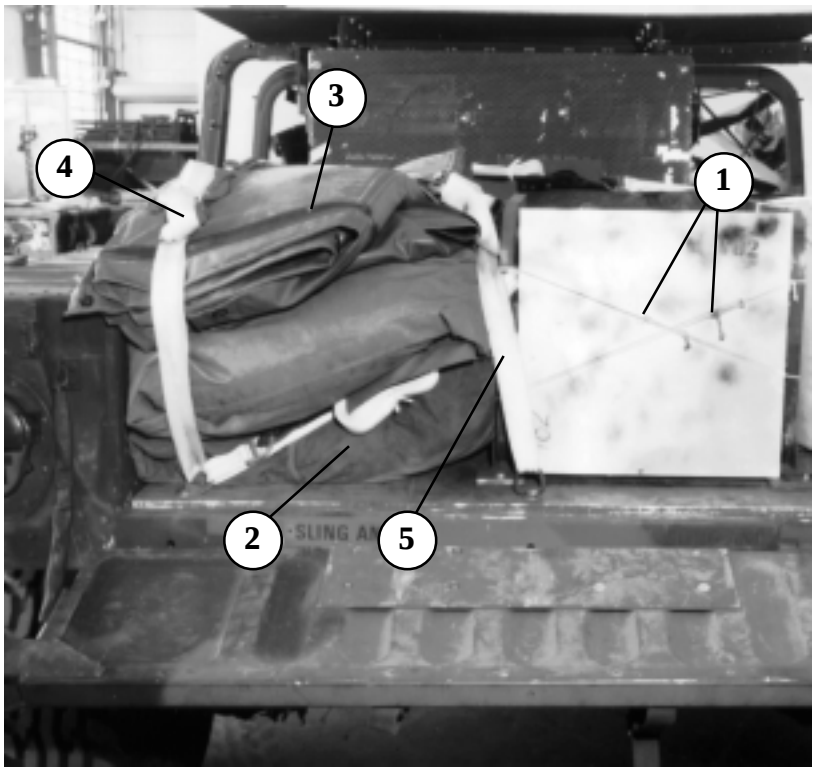

1. Secure the generator grounding plate to the rear of the generator frame with type III nylon cord.
2. Roll the camouflage net, shovel, and ax inside the tent. Place the tent on the left side of the generator.
3. Set the canvas top on top of the equipment.
4. Run a 15-foot tiedown strap through the left front D-ring of the cargo bed, over the top of the equipment, through the left rear D-ring, and back over the top of the equipment. Secure the ends with a D-ring and a load binder.
5. Run a second tiedown strap through the left front D-ring of the cargo bed, over the top of the equipment, through the center rear D-ring, and back over the top of the equipment. Secure the ends with a D-ring and a load binder.

Figure 5-10. Accompanying load secured

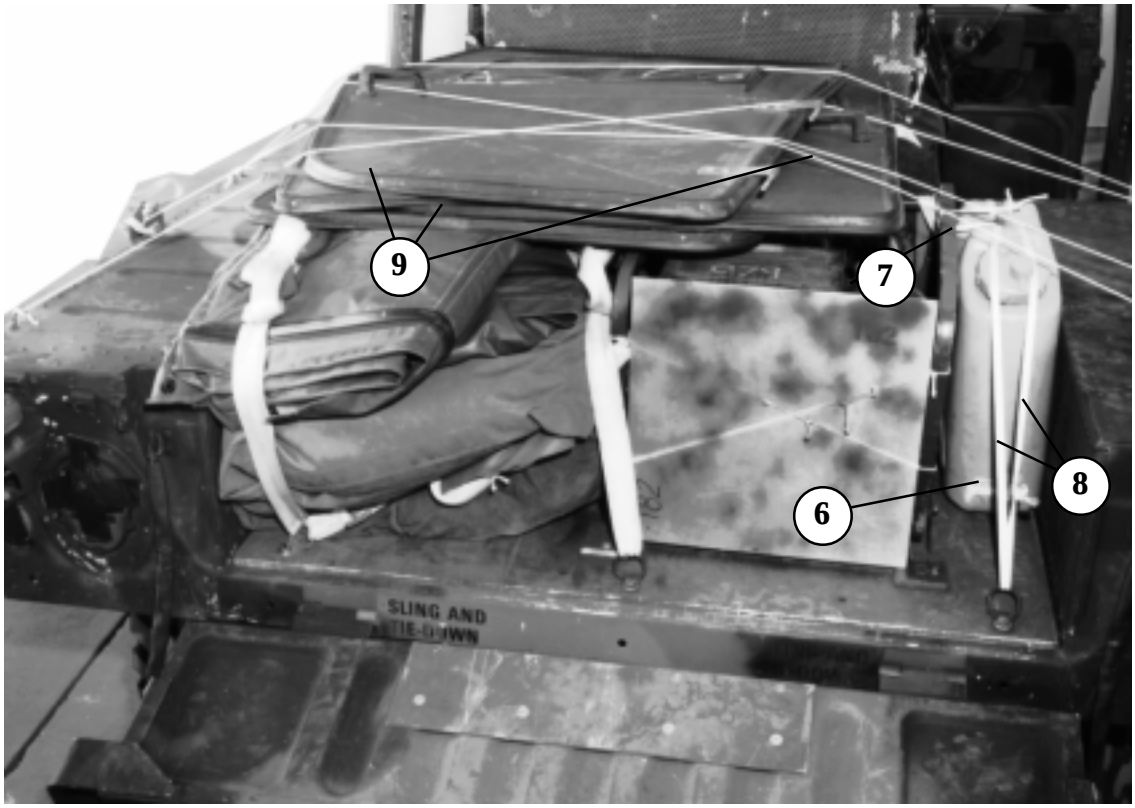

6 Place the water can on the right side of the generator.

7 Pass a length of 1/2-inch tubular nylon webbing through the carrying handle of the water can and around the top right frame of the generator. Tie the ends of the webbing together.

8 Pass a length of 1/2-inch tubular nylon webbing through the right front D-ring of the cargo bed. Take both ends of the webbing and interlace them through the carrying handle of the water can. Take one end and pass it through the right rear D-ring. Tie the ends of the webbing together.

9 Place the doors on top of the generator and canvas top. Secure the doors of the vehicle with type III nylon cord.

Figure 5-10. Accompanying load secured (continued)

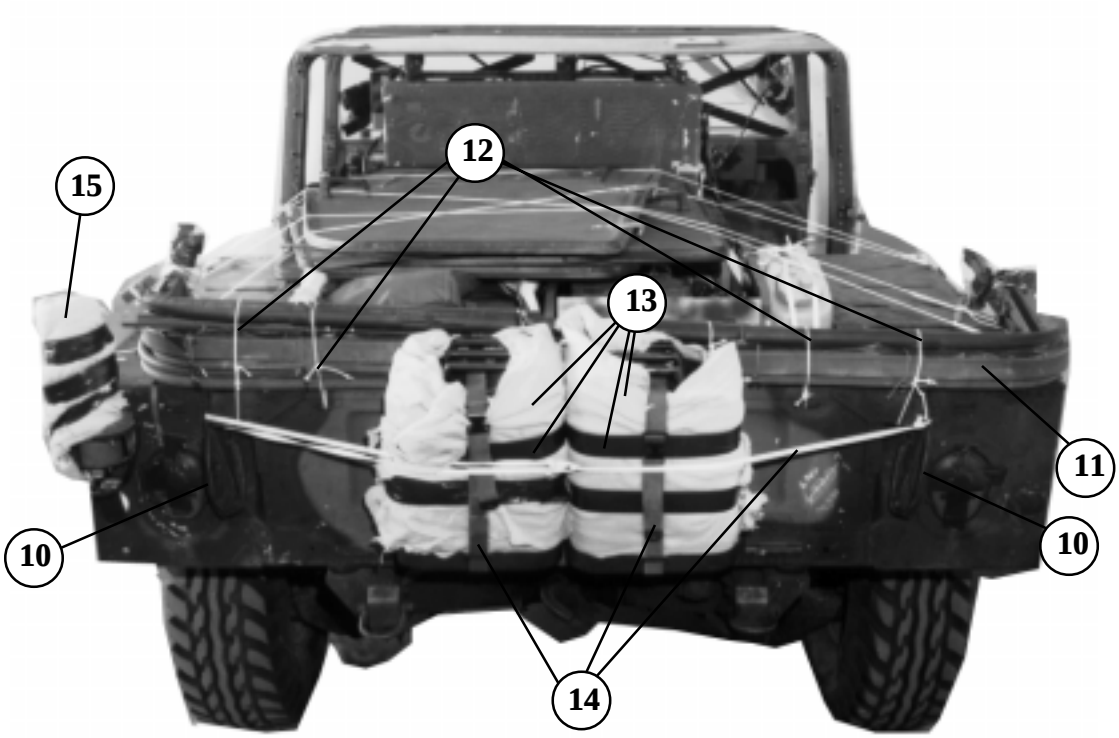

10 Close and secure the tailgate.

11 Lay the bows on top of the rear fenders and the tailgate.

12 Secure the bows with type III nylon cord.

13 Wrap the fuel cans with cellulose wadding. Tape the wadding in place.

14 Place the fuel cans in their racks. Secure them with the straps provided and a length of 1/2-inch tubular nylon webbing.

15 Wrap the antenna mount with cellulose wadding. Tape the wadding in place.

Figure 5-10. Accompanying load secured (continued)

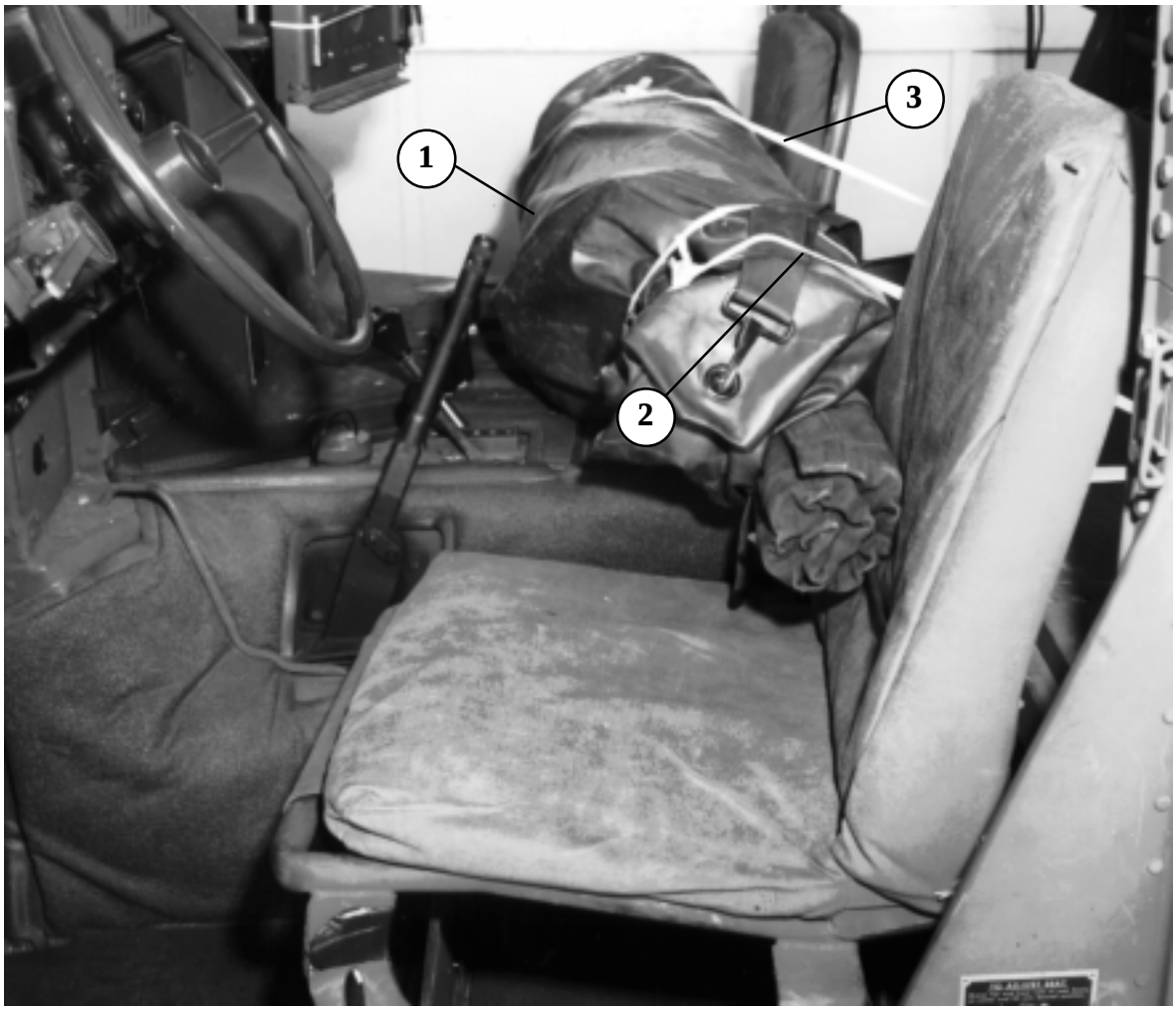

1. Cover the antennas and netting poles in their covers. Set them across the front seats.
2. Run a length of 1/2-inch tubular nylon webbing through the left front D-ring on the cargo bed floor and around the netting poles and antennas. Tie the ends of the webbing together.
3. Repeat the procedures in step 2 above using the right front D-ring.

Figure 5-11. Antennas and netting poles secured

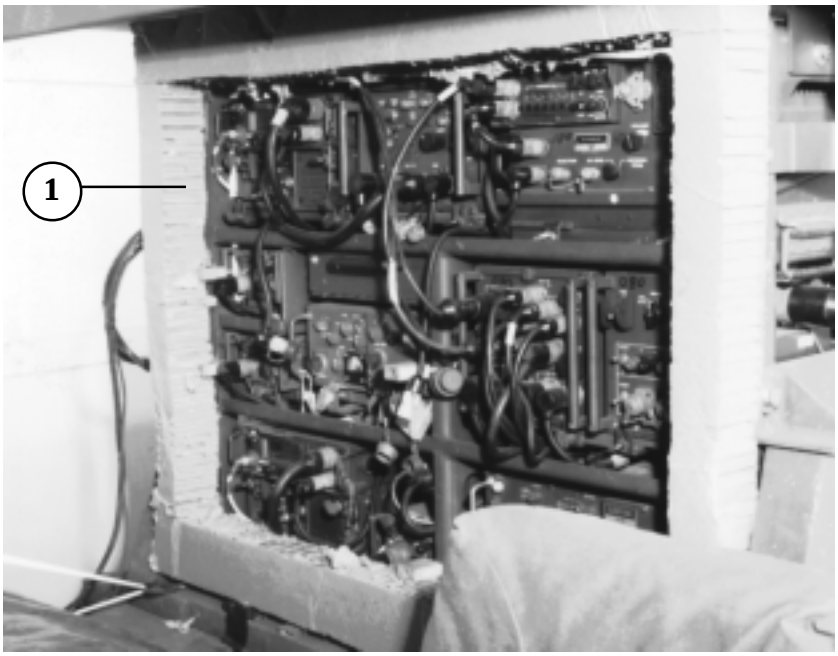

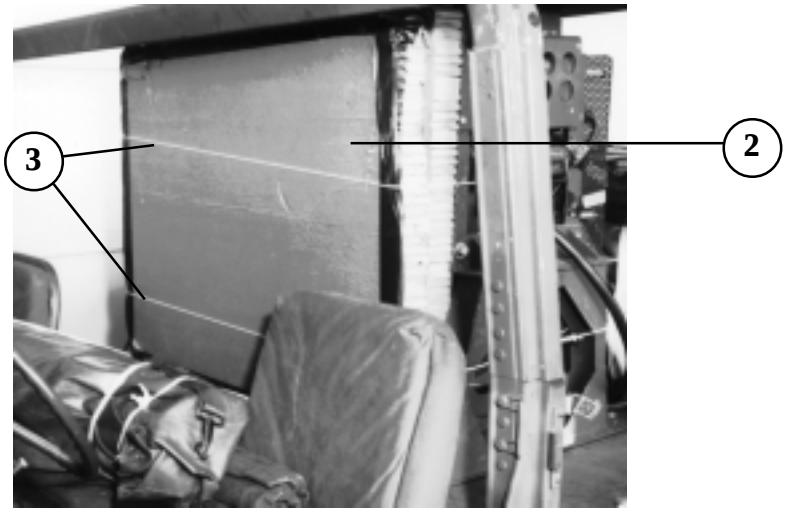

1 Make a 26- by 35-inch cutout in the center of a 33- by 40-inch piece of honeycomb. Place the honeycomb in front of the GRC/206 radio pallet.

2 Place a 33- by 40-inch piece of honeycomb against the first piece of honeycomb. Tape the edges of the second piece of honeycomb.

3 Secure the honeycomb pieces to the GRC/206 radio pallet with type III nylon cord.

Figure 5-12. Radio pallet secured

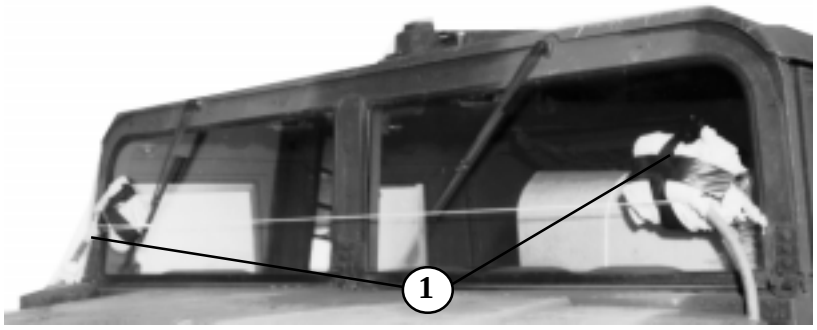

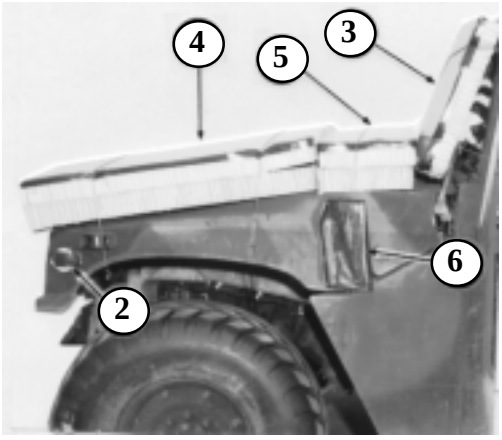

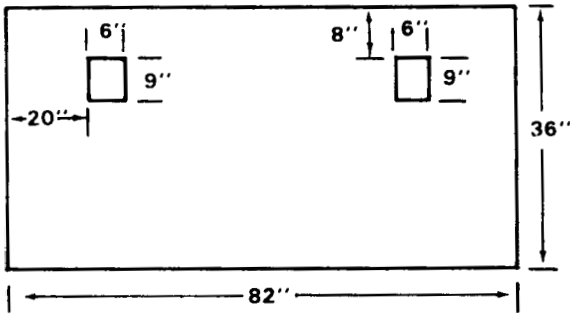

1. Pad the mirrors with cellulose wadding taped in place. Fold the mirrors inward, and tie them together with type III nylon cord.

2. Tape all lights and reflectors.

3. Place a 21- by 83-inch piece of honeycomb over the outside of the windshield and mirrors. Tie the honeycomb to the windshield with two lengths of type III nylon cord.

4. Place two 36- by 82-inch pieces of honeycomb on the hood with cutouts as shown. Tape the 36-inch sides of the top piece. Tie the honeycomb in place with two lengths of type III nylon cord. Tie one length to the coil springs and the other to the upper suspension arms.

5. Place two 12- by 82-inch pieces of honeycomb between the windshield and the pieces of honeycomb positioned in step 4 above. Tape the top outside edges. Secure the honeycomb to the hood latch brackets with type III nylon cord.

6. Tape the hood latches.

Figure 5-13. Front of truck prepared

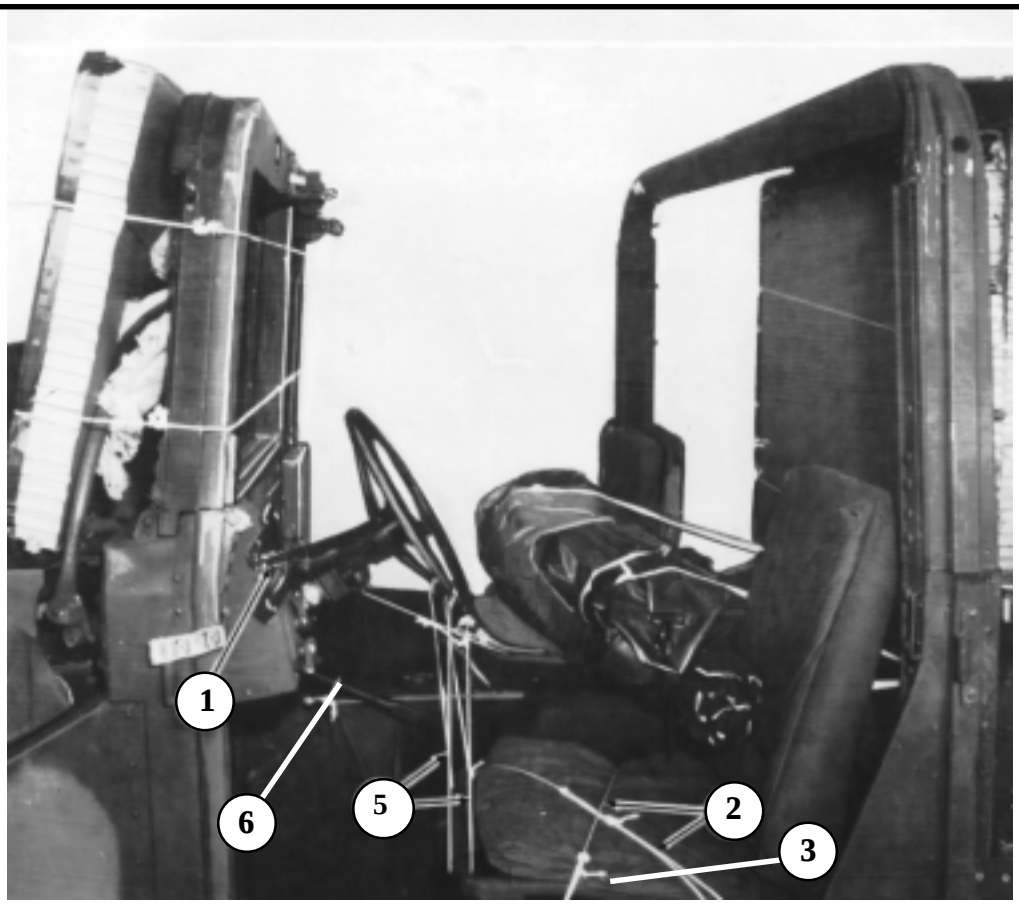

1. Tape the engine start and stop switch in the stop position.
2. Secure seats to the seat frame with type III nylon cord.
3. Secure seat cushions to the frame with type III nylon cord
4. Secure the fire extinguisher in place with type III nylon cord, if required (not shown).
5. Secure the steering wheel to the seat frame with type III nylon cord.
6. Tie the emergency brake handle in the off position with type III nylon cord.

Figure 5-14. Cab of truck prepared

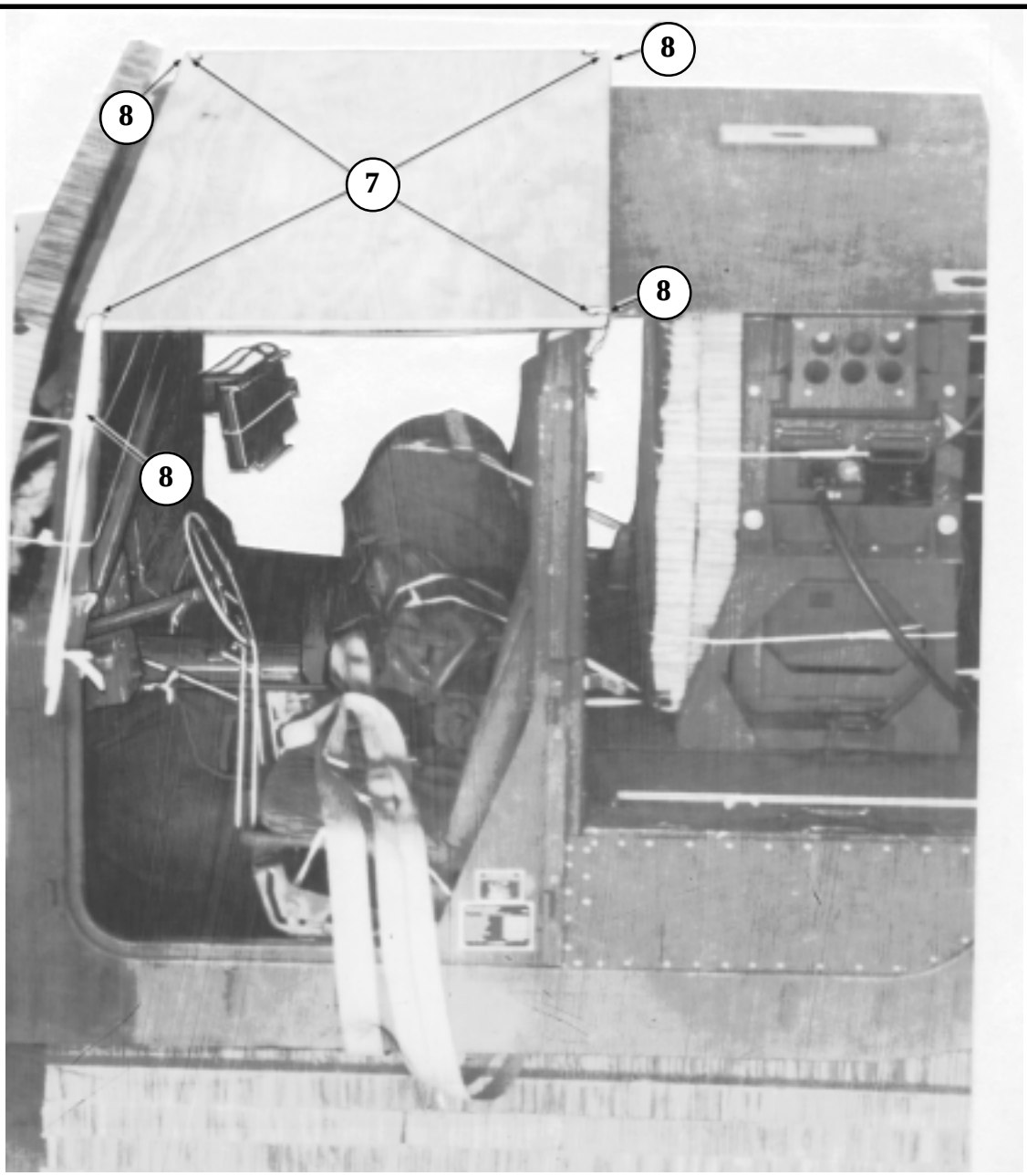

7 Make a 1/2-inch hole in each corner (2-inches from each edge) of a 3/4- by 36- by 82-inch piece of plywood. Place the plywood over the top of the driver compartment.

8 Pass a length of 1/2-inch tubular nylon webbing through each of the holes of the plywood. Secure each corner of the plywood to the top bow frame.

Figure 5-14. Cab of truck prepared (continued)

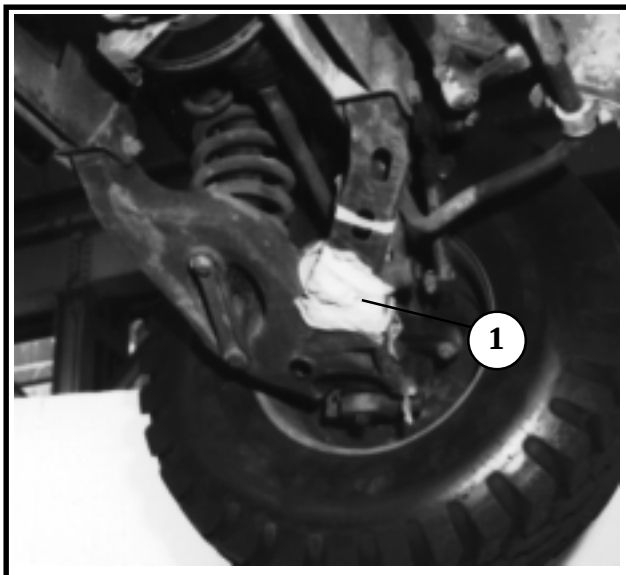

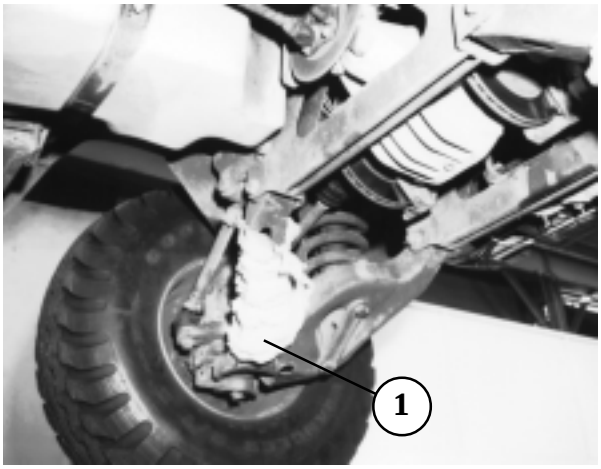

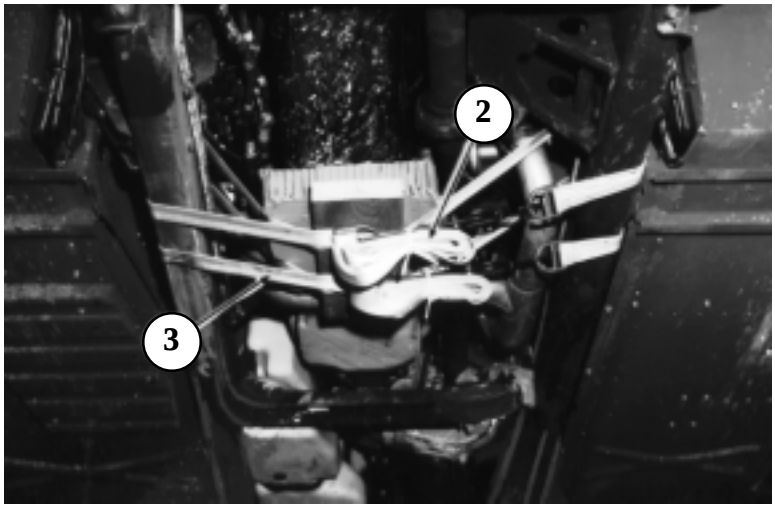

1 Pad the lower control arms on the front and rear of the truck with cellulose wadding taped in place.

2 Pass a 15-foot tiedown strap over the right frame rail, under the oil pan, and over the left frame rail. Make sure the wires running along the frame rail are to the outside of the strap. Place a 12- by 12-inch piece of honeycomb and a 2- by 6- by 16-inch piece of lumber between the strap and oil pan.

3 Fasten the strap with a D-ring and a loadbinder.

Figure 5-15. Underside of truck prepared

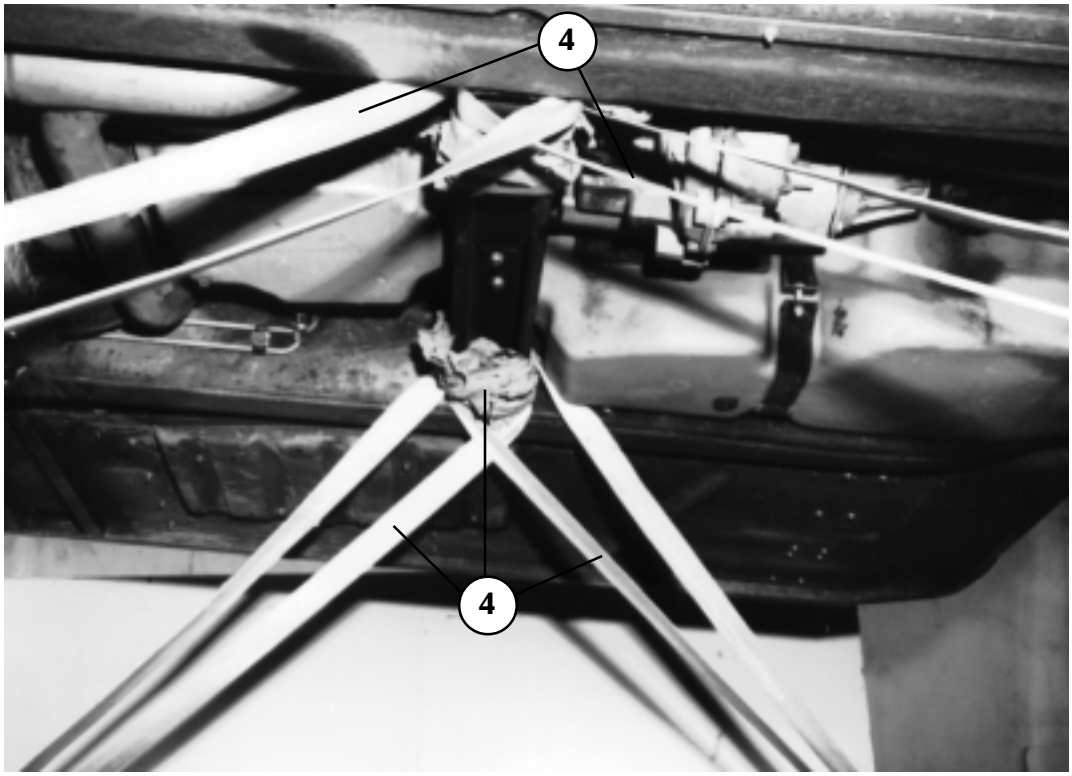

4 Pad each end of the cross member with cellulose wadding. Tape the wadding. Wrap two 15-foot tiedown straps around the cross member on each end. Use these four straps to lash the truck to the platform. Place the ends of the straps inside the truck until needed.

Figure 5-15. Underside of truck prepared (continued)

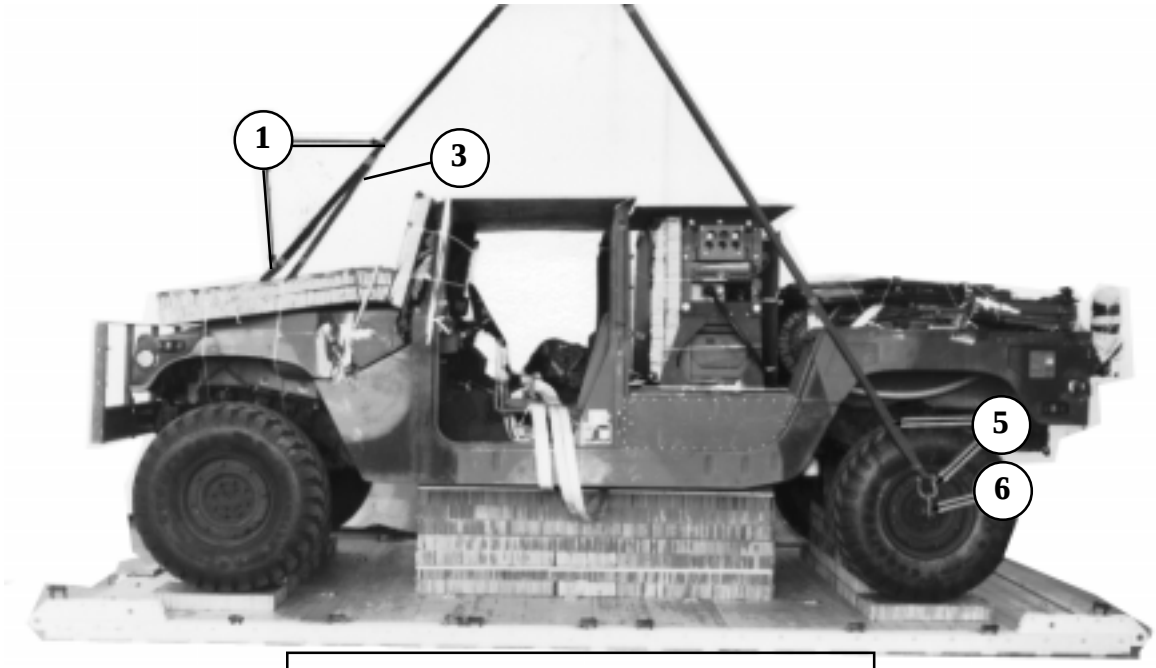

Note: The use of HDDS is optional but recommended.

1. Pass a 3-foot (2-loop). type XXVI nylon webbing sling through one end of a 9-foot (2-loop), type XXVI nylon sling.
2. Pass a medium clevis through both ends of the 3-foot sling, forming a donut. Bolt the clevis to the right front lifting point on the hood. (Not shown).
3. Repeat steps 1 and 2 above for the left front lifting point.
4. Remove the front lifting shackles on the front bumper, and install them on the rear wheels of the truck (Not shown).

   NOTE: Make sure the shackles on the rear wheels are in a horizontal position when the truck is being positioned on the platform.
5. Install a medium clevis on one end of a 12-foot (2-loop), type XXVI nylon webbing sling.
6. Pass another medium clevis through the lifting shackle on the right rear wheel of the truck. Attach the clevis on the end of the 12-foot sling to the medium clevis on the right wheel lifting shackle.
7. Repeat steps 5 and 6 above for the left rear wheel shackle.

Figure 5-16. Lifting slings installed

5-5. Positioning Truck

Position the truck on the platform as shown in Figure 5-17.

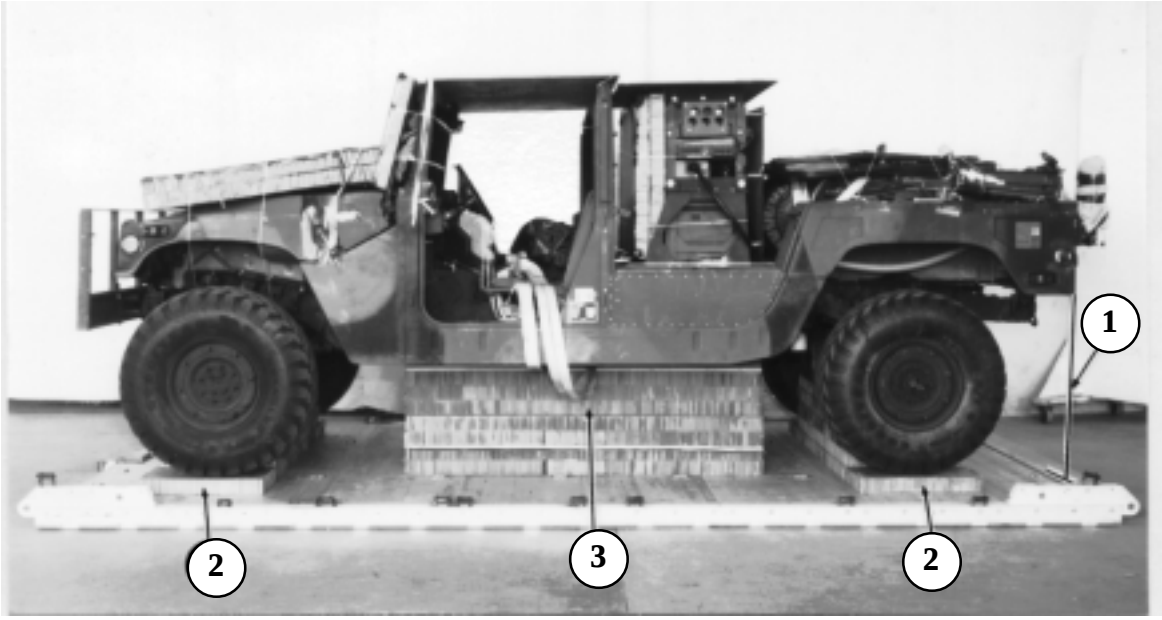

1. Center the truck on the platform with the rear of the truck 4 inches from the front edge.
2. Make sure that the suspension cross members rest squarely on stacks 1 and 3.
3. Make sure that the frame rails rest squarely on stack 2.
4. Remove the lifting slings, and place the shackles back on the front bumper (not shown).
5. Put the transmission and 4-wheel drive lever in the neutral position (not shown).

Figure 5-17. Truck positioned

5-6. Lashing Truck

Lash the truck to the platform according to FM 10-500-2/
TO 13C7-1-5 and as shown in Figures 5-18 and 5-19.

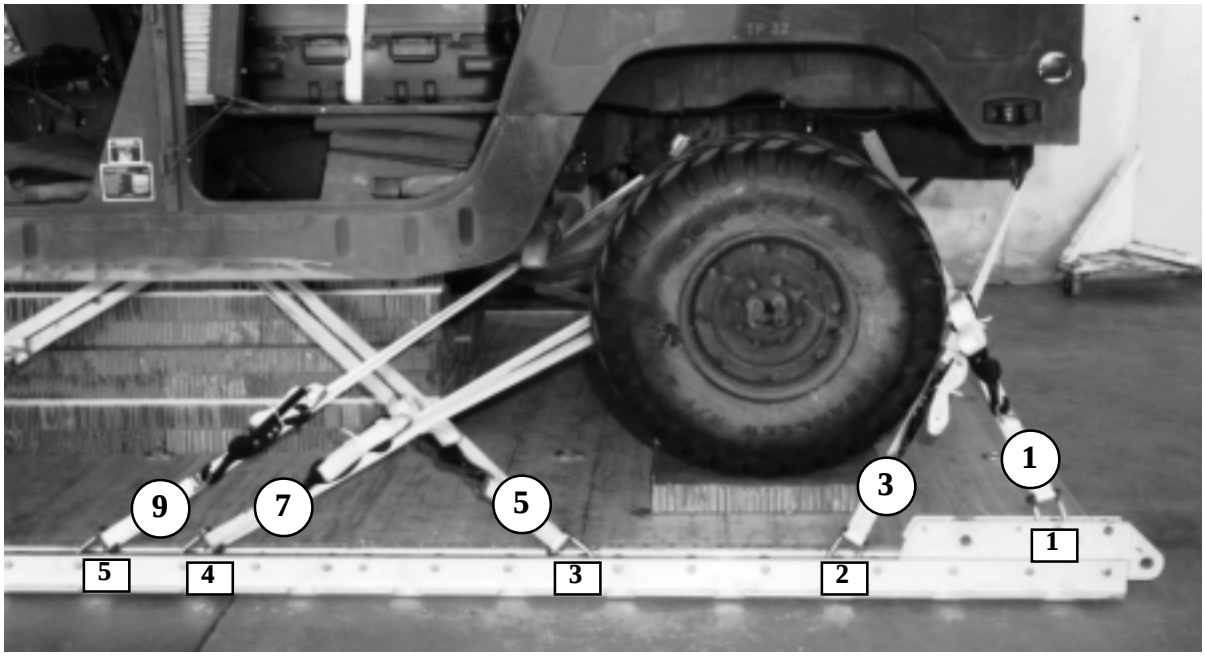

Lashing Number	Tiedown Clevis Number	Instructions
		Pass lashing:
1	1	Through tiedown bracket behind left rear coil spring.
2	1A	Through tiedown bracket behind right rear coil spring.
3	2	Through left rear lifting shackle.
4	2A	Through right rear lifting shackle.
5	3	Around left end of the cross member.
6	3A	Around right end of the cross member.
7	4	Around left rear lower control arm.
8	4A	Around right rear lower control arm.
9	5	Through tiedown bracket in front of left rear coil spring.
10	5A	Through tiedown bracket in front of right rear coil spring.

Figure 5-18. Lashings 1 through 10 installed

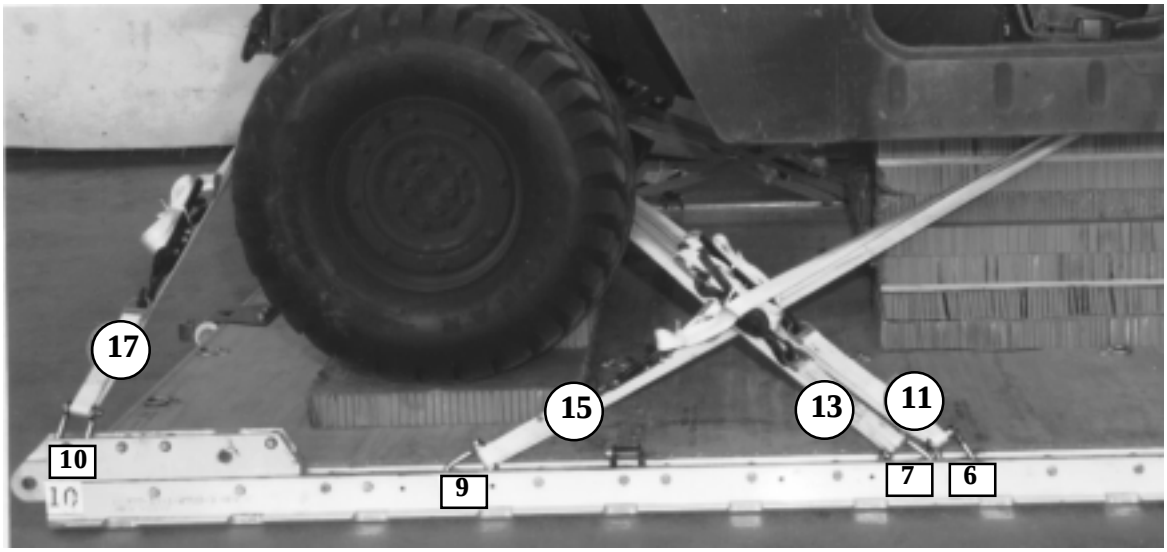

Lashing Number	Tiedown Clevis Number	Instructions
		Pass lashing:
11	6	Through tiedown bracket behind left front coil spring.
12	6A	Through tiedown bracket behind right front coil spring.
13	7	Around left lower control arm.
14	7A	Around right lower control arm.
15	9	Around left end of the cross member.
16	9A	Around right end of the cross member.
17	10	Through tiedown bracket on end of left frame rail.
18	10A	Through tiedown bracket on end of right frame rail.

Figure 5-19. Lashings 11 through 18 installed

5-7. Building Body Side Boards

Build two body side boards as shown in Figure 5-20.

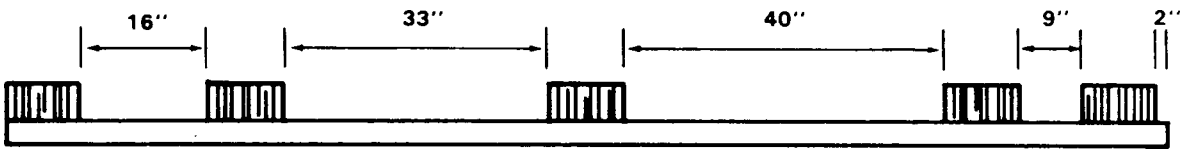

Step:

1. Use one 2- by 6- by 150-inch piece of lumber and five 6- by 10-inch pieces of honeycomb.
2. Glue or tape the first piece of honeycomb 2 inches from either end of the board.
3. Glue or tape the second piece of honeycomb 9 inches behind the first piece of honeycomb.
4. Glue or tape the third piece of honeycomb 40 inches behind the second piece of honeycomb.
5. Glue or tape the fourth piece of honeycomb 33 inches behind the third piece of honeycomb.
6. Glue or tape the fifth piece of honeycomb 16 inches behind the fourth piece of honeycomb.
7. Use the procedures in steps 1 through 6 above to build the second body side board.

Figure 5-20. Body side boards built

5-8. Securing Body Side Boards

Secure the body side boards on the truck as shown in Figure 5-21.

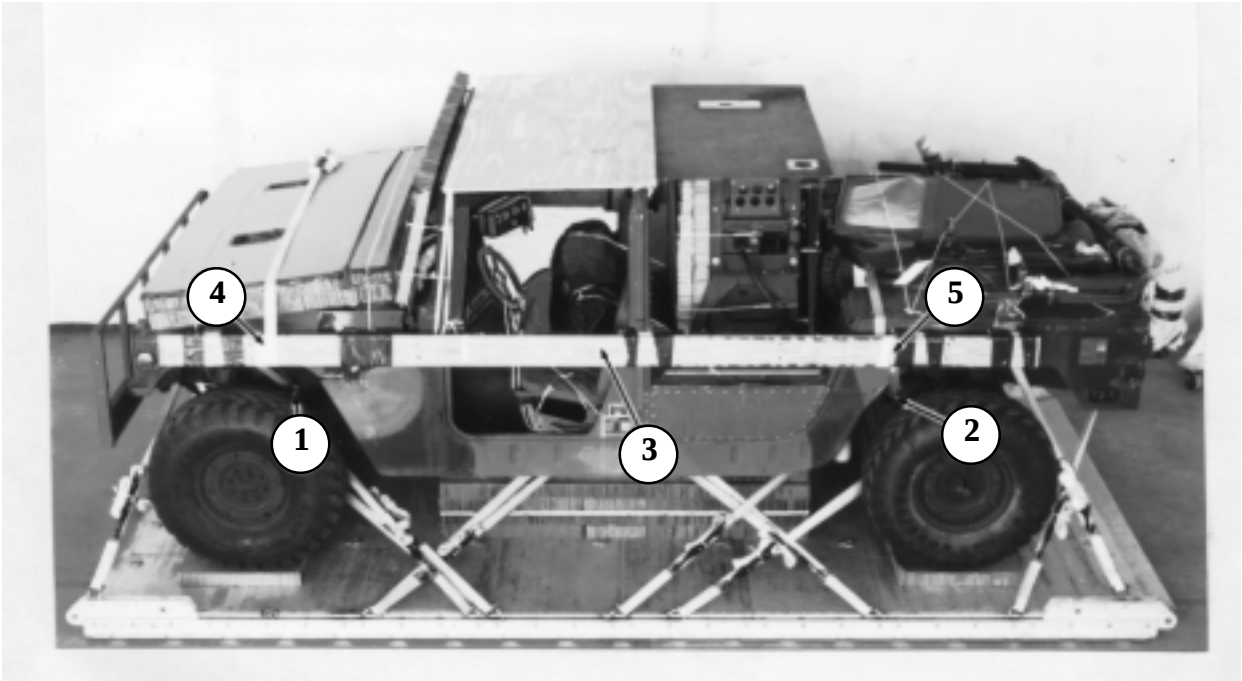

1. Pass a 15-foot tiedown strap around the upper control arm and through its own D-ring on the right front and left front of the truck.
2. Pass a 15-foot tiedown strap around the upper control arm and through its own D-ring on the right rear and left rear of the truck.
3. Hold both body side boards up against the truck with the first piece of honeycomb positioned at the rear of the truck.
4. Run the 15-foot tiedown straps positioned in step 1 above around the boards on the right front and left front of the truck. Secure the ends with D-rings and a load binder.
5. Repeat the procedures in step 4 above for the right rear and left rear of the truck.

Figure 5-21. Body side boards secured

5-9. Securing Top Tow Plate

Secure the top tow plate as shown in Figure 5-22.

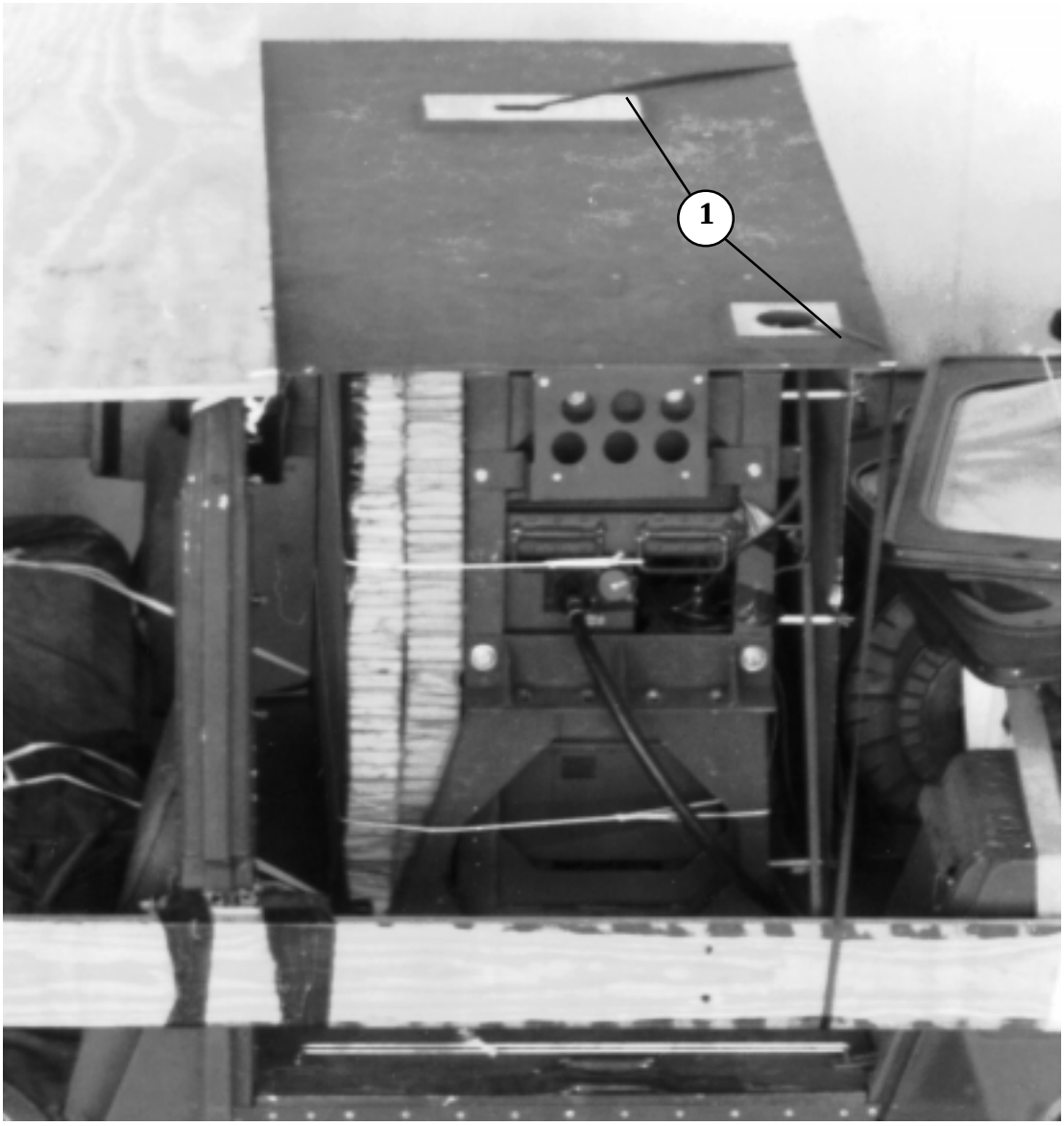

1 Pass a length of 1/2-inch tubular nylon webbing through each of the large holes on the top tow plate. Secure the webbing to a convenient point on the load.

Figure 5-22. Tow plate secured

5-10. Installing Suspension Slings and Deadman Tie

Install the suspension slings and the deadman tie as shown in Figure 5-23.

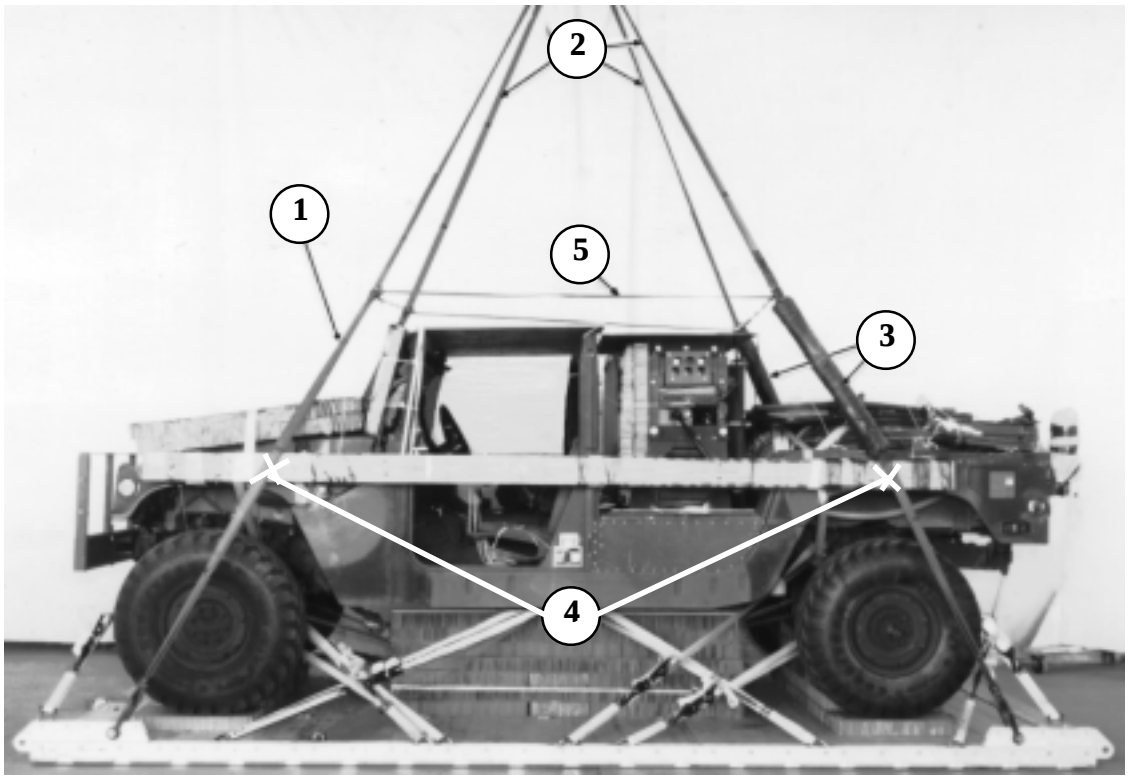

1. Attach a 16-foot (2-loop), type XXVI nylon webbing suspension sling to a large clevis. Attach the clevis to one of the tandem links.
2. Repeat the procedure in step 1 above for the other three tandem links.
3. Position a 12- by 36-inch piece of felt on the front suspension slings 52 inches above the large clevis. Secure the felt in place with type III nylon cord and tape.
4. Remove all slack from the suspension slings and safety the suspension slings to the side boards using type III nylon cord.
5. Raise the four suspension slings above the load, and install a deadman's tie according to FM 10-500-2/TO 13C7-1-5.

Figure 5-23. Suspension slings and deadman's tie installed

5-11. Stowing Cargo Parachutes

Use two G-11 cargo parachutes on this load.
Stow the cargo parachutes as shown in Figure 5-24.

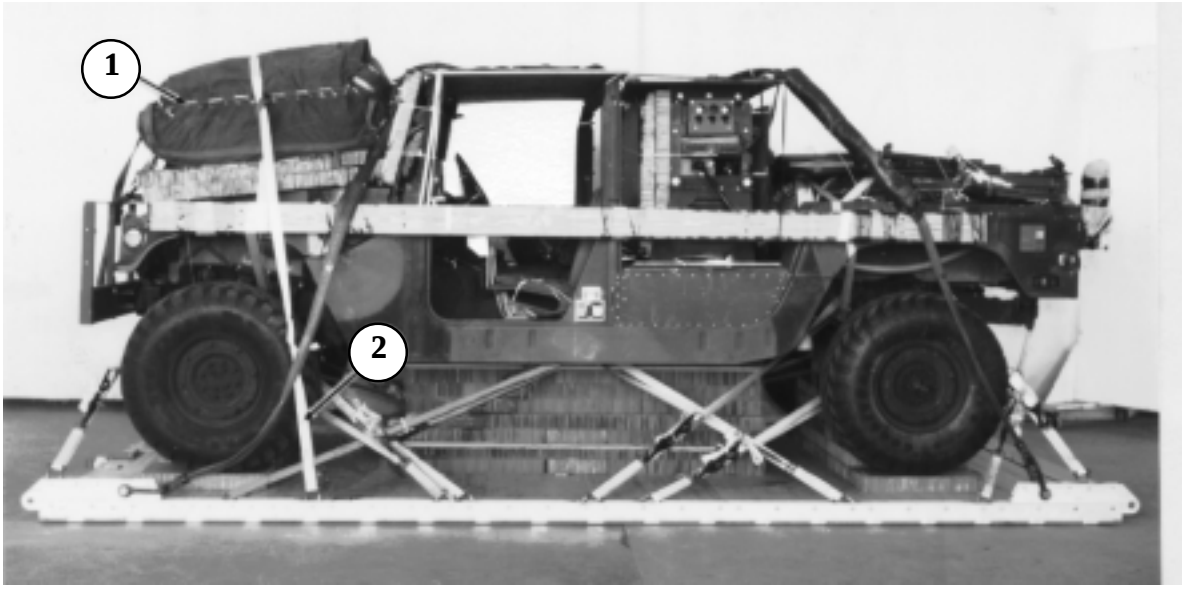

1 Prepare two G-11 cargo parachutes and stow them on the honeycomb positioned on the hood of the vehicle according to FM 10-500-2/TO 13C7-1-5.

2 Install a restraint strap according to FM 10-500-2/TO 13C7-1-5. Secure the restraint strap to clevises 9 and 9A.

Figure 5-24. Cargo parachutes stowed

5-12. Installing Extraction System

Use the EFTC extraction system for this load. Install the components of the EFTC according to FM 10-500-2/TO 13C7-1-5 and as shown in Figure 5-25.

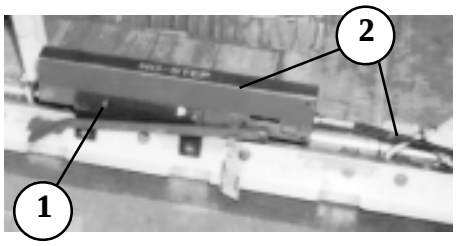

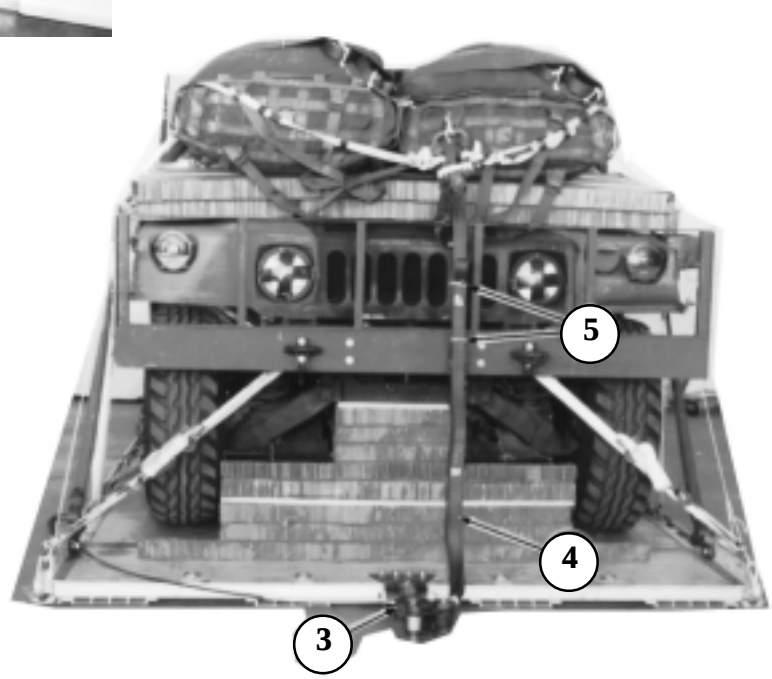

1. Install the EFTC inside and outside mounting brackets in the front mounting holes in the left platform side rail.
2. Install the actuator and a 16-foot cable. Route the cable to the inside of the lashings and safety it to one of the lashings with type I, 1/4-inch cotton webbing.
3. Install the latch assembly and attach the cable using the short extraction link.
4. Install a 16-foot (2-loop), type XXVI nylon webbing deployment line on the load.
5. S-fold the deployment line and tie the folds in two places with type I, 1/4-inch cotton webbing.

Figure 5-25. EFTC installed

5-13. Installing Release System

Install and attach an M-1 cargo parachute release according to FM 10-500-2/TO 13C7-1-5 and as shown in Figure 5-26.

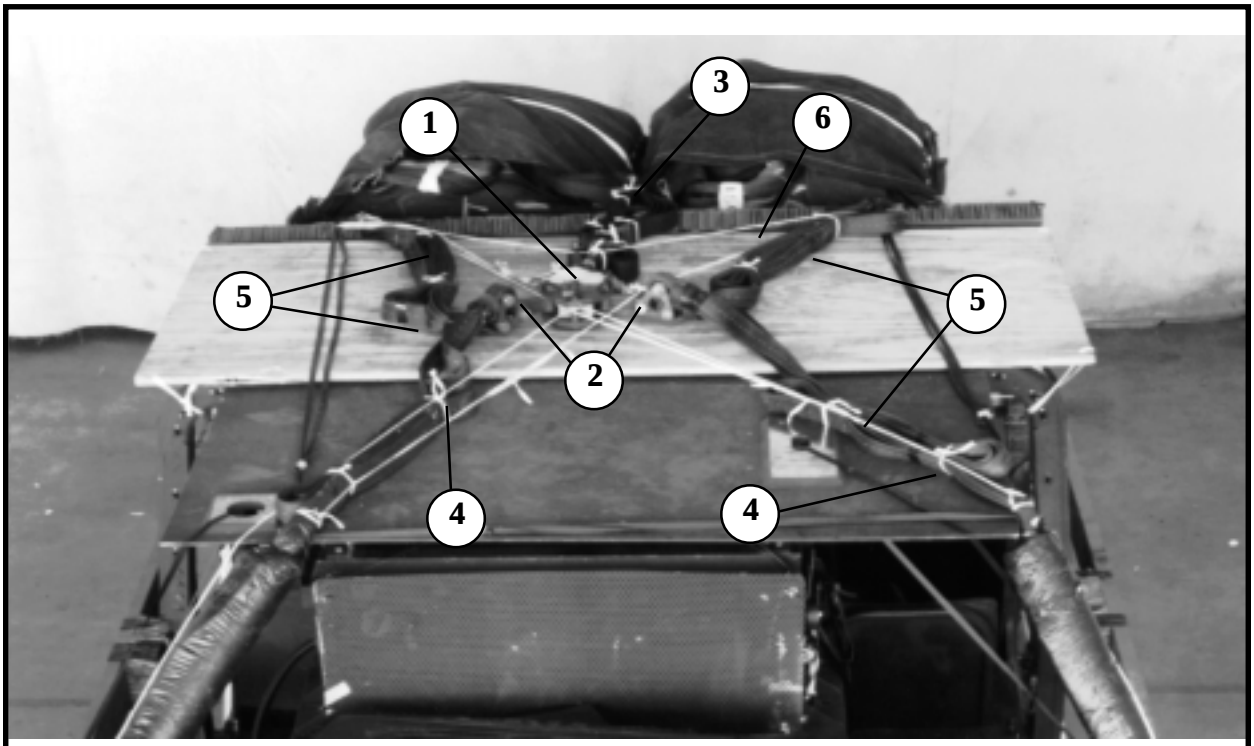

1. Place the M-1 release on the plywood over the driver's compartment.
2. Attach the suspension slings to the M-1 release system.
3. Attach the parachute riser extension to the M-1 release system.
4. Safety the suspension slings with type III nylon cord.
5. Fold the excess suspension slings and tie the folds in place with type I, 1/4-inch cotton webbing.
6. Center the M-1 cargo parachute release on top of the load. Secure the M-1 release with type III nylon cord to clevises 1 and 1A and 10 and 10A (not shown).

Figure 5-26. M-1 cargo parachute release installed

5-14. Placing Extraction Parachute

Select the extraction parachute and extraction line needed using the extraction line requirements table in FM 10-500-2/TO 13C7-1-5. Place the extraction line on the load for installation in the aircraft.

5-15. Installing Provisions for Emergency Restraints

Select and install the provisions for the emergency aft restraints according to the emergency aft restraint requirements table in FM 10-500-2/TO 13C7-1-5.

5-16. Marking Rigged Load

Mark the rigged load according to FM 10-500-2/TO 13C7-1-5 and as shown in Figure 5-27. Complete Shipper's Declaration for Dangerous Goods and affix to load. If the load varies from the one shown, the weight, height, CB, tip off curve, and parachute requirements must be recomputed.

5-17. Equipment Required

Use the equipment listed in Table 5-1 to rig the load shown in Figure 5-27.

CAUTION
Make the final rigger inspection required by FM 10-500-2/TO 13C7-1-5 before the load leaves the rigging site.

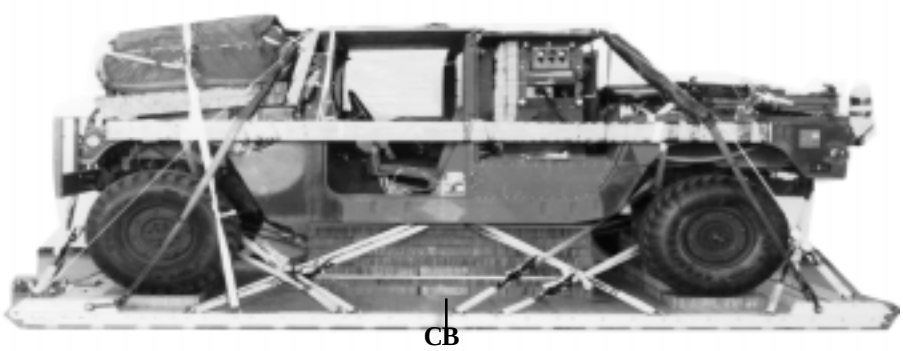

RIGGED LOAD DATA

Weight.....9,480 pounds

Max Weight.....10,000 pounds

Height.....85 inches

Width.....108 inches

Length..... 214 inches

Overhang: Front.....0

Rear.....19 inches

Center of Balance (CB)
(from front edge of the platform).....101 inches

Extraction System.....EFTC

Figure 5-27. M998 cargo/troop carrier rigged on a 16-foot platform for low velocity airdrop

Table 5-1. Equipment required for rigging the M998 (two seater) with GRC/206 Air Force pallet on a 16-foot type V platform for low-velocity airdrop

National Stock Number	Item	
8040-00-273-8713	Adhesive, paste, 1-gal.	As required
1670-01-035-6054	Bridle (for line bag)	1
	Clevis, suspension:	
4030-00-090-5354	1-in (large)	6
4030-00-678-8562	3/4-in (medium)	6
8305-00-242-3593	Cloth, cotton duck, 60-in	As required
4020-00-240-2146	Cord, nylon, type III, 550-lb.	As required
1670-00-434-5787	Coupling, airdrop extraction force transfer cable, 20-ft	1
	Cover:	
1670-00-360-0328	Clevis, large	6
1670-00-360-0329	Link, type IV	3
8135-00-664-6958	Cushioning material, packaging, cellulose wadding	As required
8305-00-958-3685	Felt, 1/2-in thick	As required
1670-01-183-2678	Leaf, extraction line (line bag)	3
	Line extraction:	
1670-01-062-6313	60-ft (3-loop), type XXVI (C-130)	1
1670-01-107-7651	140-ft (3-loop), type XXVI (for C-141,C-5 or C-17)	1
1670-01-064-4452	60-ft (1-loop), type XXVI with towplate link (for C-17) Drogue Line	1
	Link assembly:	
1670-00-783-5988	Type IV	6
	Two-point:	
5306-00-435-8994	Bolt, 1-in diam, 4-in long	2
5310-00-232-5165	Nut, 1-in, hexagonal	2
1670-00-003-1953	Plate, side, 3 3/4-in	2
5365-00-007-3414	Spacer, large	2
5315-00-010-4659	Nail, steel wire, 8d	As required
1670-00-753-3928	Pad, energy-dissipating, (honeycomb),	
	3- by 36- by 96-in:	14 sheets
	Parachute, cargo	
1670-01-016-7841	G-11B	2
	Parachute, cargo extraction	
1670-01-063-3716	22-ft	1
	Drogue (for C-17)	
1670-01-063-3715	15-ft	1
	Platform, airdrop, type V, 16-ft:	1
1670-01-162-2372	Clevis, assembly (type V)	(22)
1670-01-353-8424	Extraction bracket assembly	(1)
1670-01-353-8425	Bracket assembly, coupling	(1)
1670-01-162-2381	Tandem link assembly (Multipurpose link)	(4)
	Lumber:	
5510-00-220-6146	2- by 4- by:	As required
5510-00-220-6148	2- by 6- by:	As required
5530-00-128-4981	Plywood, 3/4-in:	4 sheets

Table 5-1. Equipment required for rigging the M998 (two seater) with GRC/206 Air Force pallet on a 16-foot type V platform for low-velocity airdrop (continued)

National Stock Number	Item	Quantity
1670-01-097-8816	Release, cargo parachute, M-1	1
	Sling, cargo, airdrop:	
	For suspension:	
1670-01-062-6302	20-ft (2-loop), type XXVI	4
	For lifting:	
1670-01-062-6301	3-ft (2-loop), type XXVI	2
1670-01-062-6303	12-ft (2-loop), type XXVI	2
1670-01-063-7761	16-ft (2-loop), type XXVI	2
	For deployment:	
1670-01-062-6304	9-ft (2-loop), type XXVI	1
	For riser extension:	
1670-01-062-6302	20-ft (2-loop), type XXVI	6
1670-00-040-8219	Strap, parachute release, multi-cut, comes with 3 knives	2
7501-00-266-5016	Tape, adhesive, 2-in	As required
1670-01-344-0825	Vehicle drive-off aid (HDDS)	1
1670-00-937-0271	Tiedown assembly, 15-ft	32
	Webbing:	
8305-00-268-2411	Cotton, 1/4-inch, type I	As required
8305-00-082-5752	Nylon, tubular 1/2-in	As required
8305-00-263-3591	Type VIII	As required

CHAPTER 6

RIGGING THE M998 CARGO/TROOP CARRIER (FOUR SEATER) WITH GRC/206 AIR FORCE PALLET ON A 16-FOOT, TYPE V PLATFORM FOR LOW-VELOCITY AIRDROP

6-1. Description of Load

The M998 cargo/troop carrier (four seater) (Figure 6-1) is 180 inches long without a winch. The height is 97 inches, reducible to 72 inches. The width is 86 1/2 inches. The truck weighs 5,660 pounds with radio equipment GRC/206 Air Force pallet. Other equipment included on the load is one cable spool; two 5-gallon fuel cans; one 5-gallon water can; one roll of field wire, one set of slave cables, and one camouflage net with support poles. Also included with this load are one shovel, one ax, two sets of antennas, 2 quarts of oil, 1 quart of transmission fluid, one funnel, and one fuel nozzle. The truck weighs 6,070 pounds with 3/4 full tank of fuel and equipment installed. The load requires two G-ll cargo parachutes.

6-2. Preparing Platform

Prepare a 16-foot, type V airdrop platform as shown in Figure 5-2.

6-3. Preparing and Positioning Honeycomb Stacks

Prepare the honeycomb stacks as shown in Figures 5-3 and 5-4. Position the stacks on the platform as shown in Figure 5-5.

NOTICE OF EXCEPTION

The honeycomb stack configuration in this chapter is that of the original load and not the newer stack configuration as shown in chapter 4.This Air Force load has never been tested and written using the newer honeycomb stack configuration. Use this configuration until a change is tested and published for this load.

Figure 6-1. M998 cargo/ troop carrier (four seater)

6-4. Preparing Truck

Prepare the truck as described below and as shown in Figures 6-2 through 6-6 and C5, FM 10-517/TO13C7-1-111, paragraph 2-4.

a. Make sure the fuel tank is not more than 3/4 full.

b. Remove the top and rear covers and all doors.

c. Tape all lights, reflectors, and gauges.

d. Tape the windshield.

e. Remove rear bows and the rear bow frame.

f. Prepare the front of the truck as shown in Figure 5-13.

g. Prepare the cab of the truck as shown in Figure 5-14.

h. Prepare the underside of the truck as shown in Figure 5-15.

NOTICE OF EXCEPTION

The up position of the windshield configuration in this chapter is that of the original load and not the newer down windshield configuration as shown in chapter 3. This Air Force load has never been tested and written using the newer windshield down configuration. Use this configuration until a change is tested and published for this load.

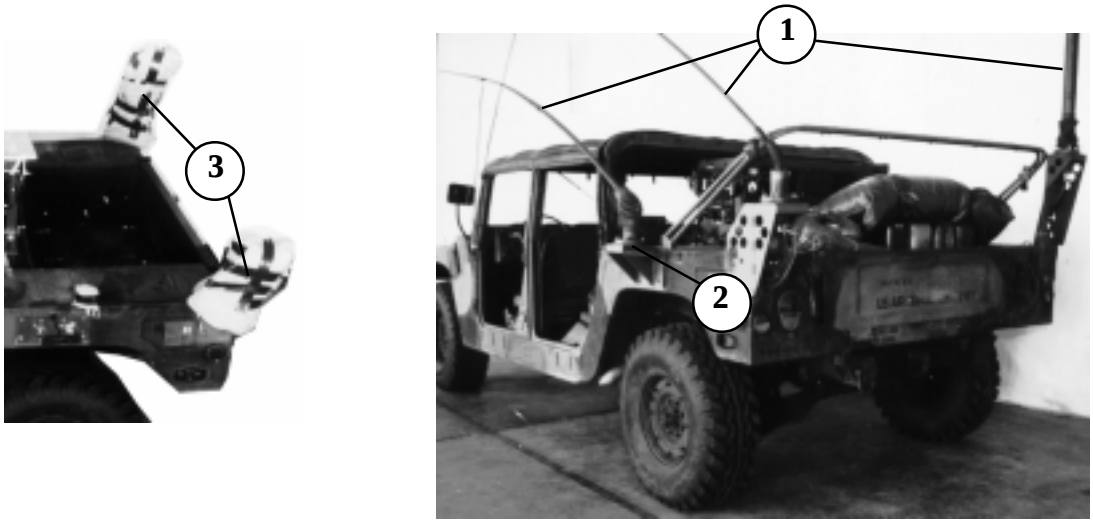

1 Remove the FM and dual VHF/UHF antennas or shark fins. Place the bolts back in their holes and secure them with tape.

2 Remove the FM and dual VHF/UHF antenna mount and bracket on the left side of the truck.

3 Pad the antenna mount brackets with cellulose wadding, and tape the wadding in place.

Figure 6-2. Antennas removed

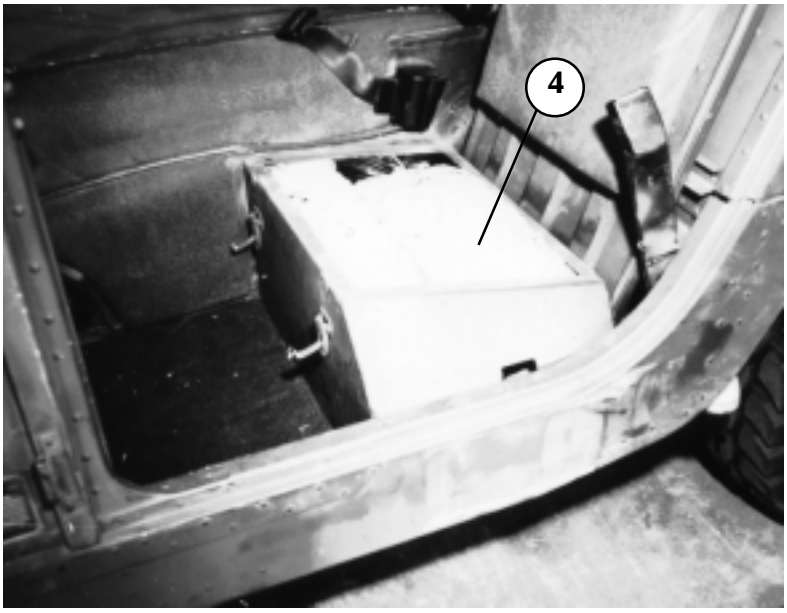

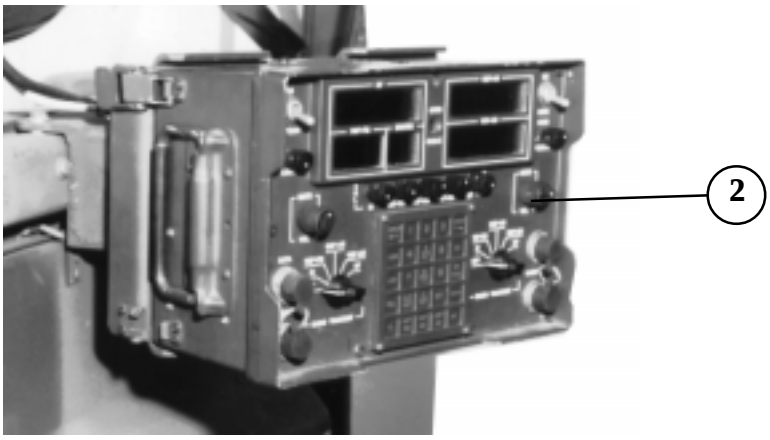

1. Remove the left rear seat cushion (not shown) to store the RSCs.
2. Remove the first RSC from the mounting bracket on the front dash.
3. Remove the second RSC from the right side of the GRC/206 Air Force communication system (not shown).
4. Wrap both RSCs in cellulose wadding. Place the RSCs in the left rear seat.
5. Place the seat cushion in its original position (not shown) Safety it using type III nylon cord (not shown).

Figure 6-3. RSCs secured

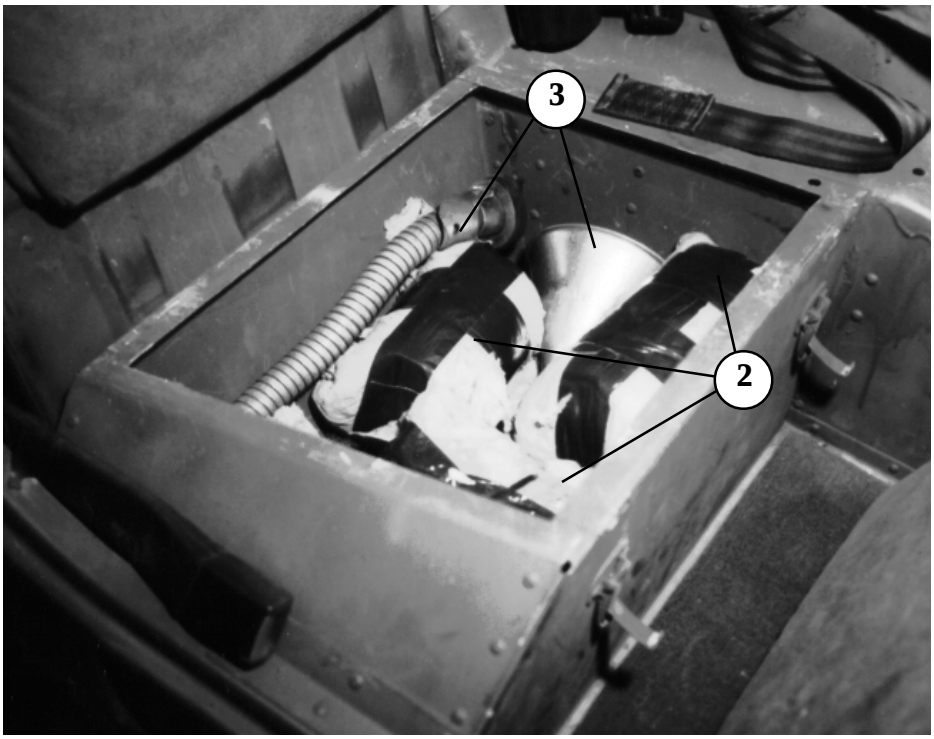

1. Remove the right rear seat cushion (not shown) to store items.
2. Wrap 2 quarts of oil and 1 quart of transmission fluid with cellulose wadding. Place them in the right rear seat.
3. Place the funnel and fuel nozzle in the right rear seat.
4. Place the seat cushion in its original position (not shown).

Figure 6-4. Oil and transmission fluid secured

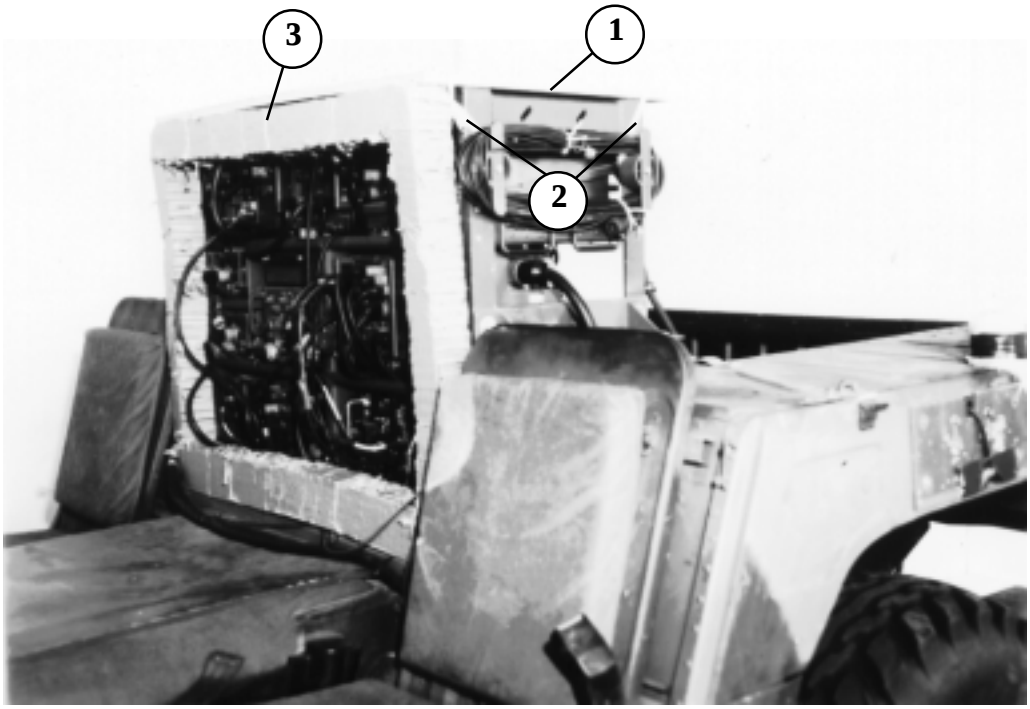

1. Place a 3/4- by 40- by 22-inch piece of plywood on top of the GRC/206 radio pallet.
2. Secure the plywood in place with a length of 1/2-inch tubular nylon webbing.
3. Make a 26- by 35-inch cutout in the center of a 33- by 40-inch piece of honeycomb. Place the honeycomb in front of the GRC/206 radio pallet.

Figure 6-5. Radio pallet secured

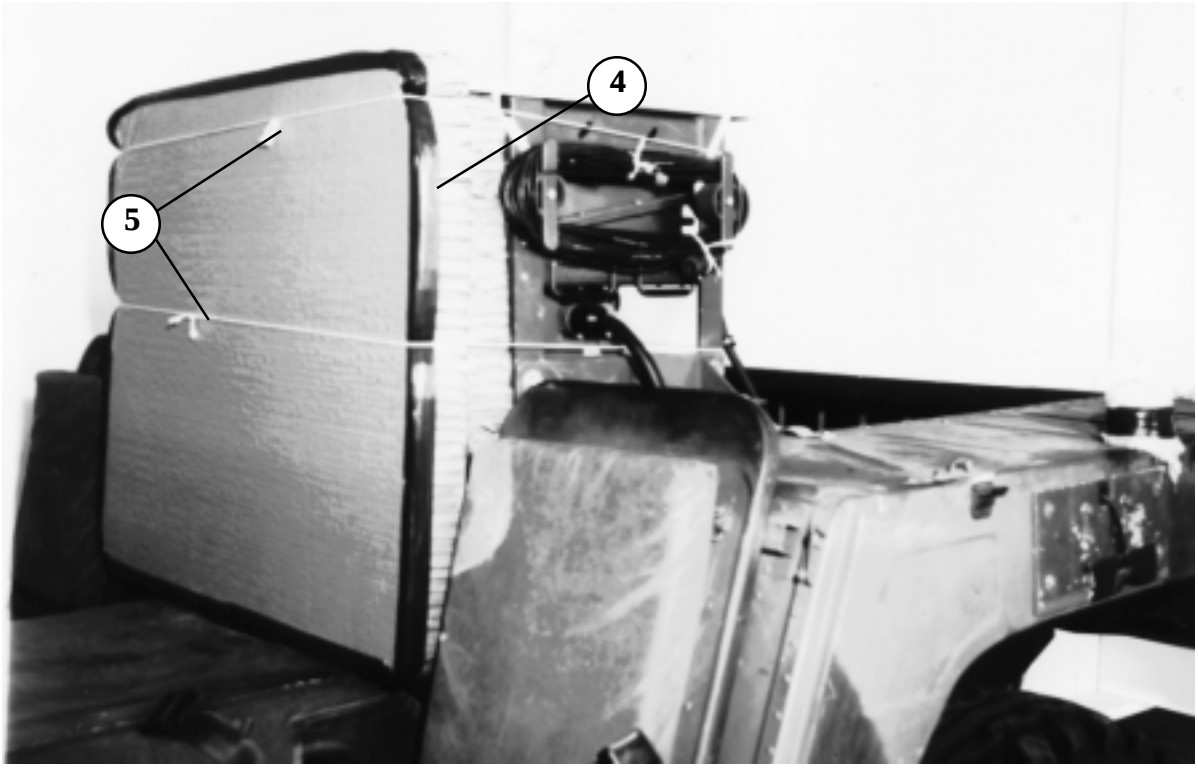

4 Place a 33- by 40-inch piece of honeycomb against the first piece of honeycomb. Tape the edges of the second piece of honeycomb.

5 Secure the honeycomb pieces to the GRC/206 radio pallet with type III nylon cord.

Figure 6-5. Radio pallet secured (continued)

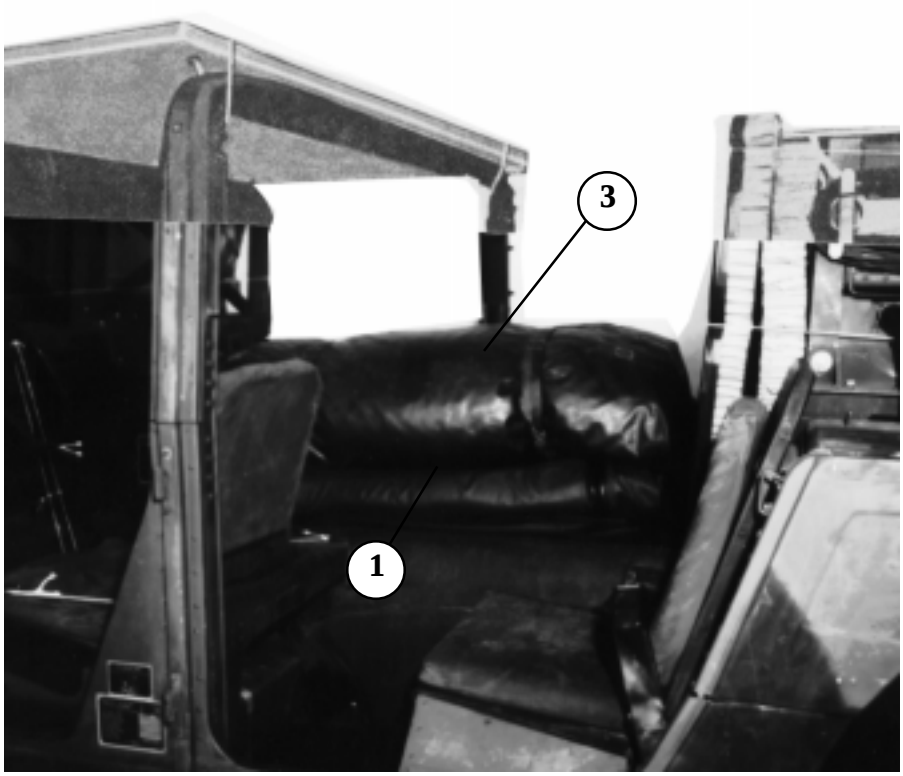

1 Fold and place the front and rear covers in the center of the passenger compartment of the vehicle.

2 Place the camouflage poles (not shown) to the right of the top covers.

3 Place an ax and shovel inside the camouflage net. Place the camouflage net on top of the covers.

NOTE: If the vehicle doors are to be dropped, stack the doors on top of the camouflage net.

Figure 6-6. Accompanying load secured

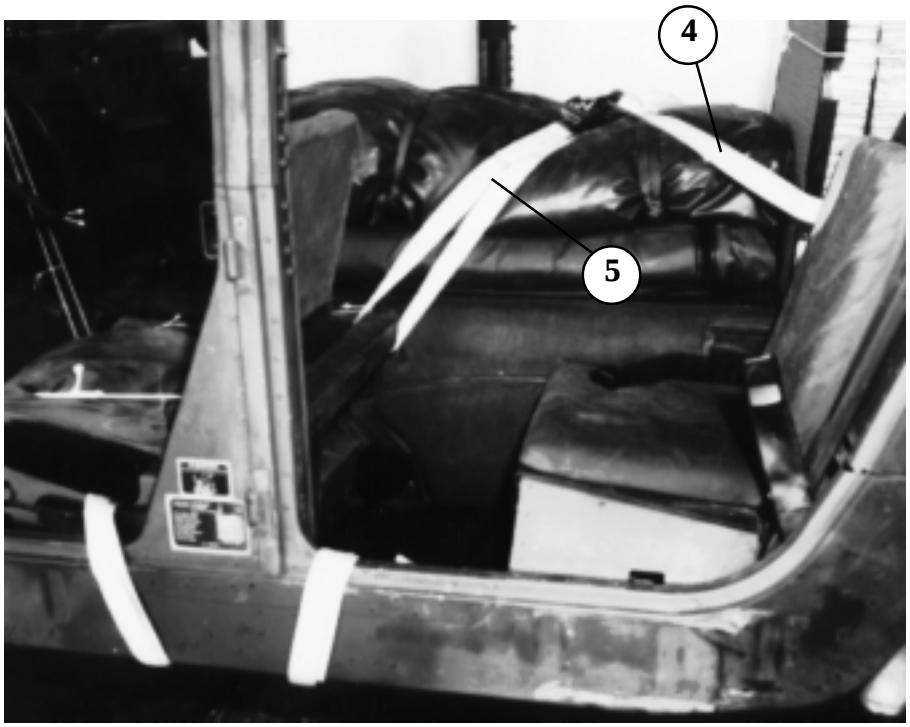

NOTE: If the vehicle doors are being dropped, make sure they are under the lashings securing the camouflage net and poles.

4 Pass a 15-foot lashing around the left front frame of the GRC/206 radio pallet, over the top of the camouflage net and poles, and around the frame support behind the front passenger seat. Secure the lashing on top of the camouflage net according to FM 10-500-2/TO 13C7-1-5.

5 Pass a 15-foot lashing around the right front frame of the GRC/206 radio pallet, over the top of the camouflage net and poles, and around the frame support behind the driver's seat. Secure the lashing on top of the camouflage net according to FM 10-500-2/TO 13C7-1-5.

Figure 6-6. Accompanying load secured (continued)

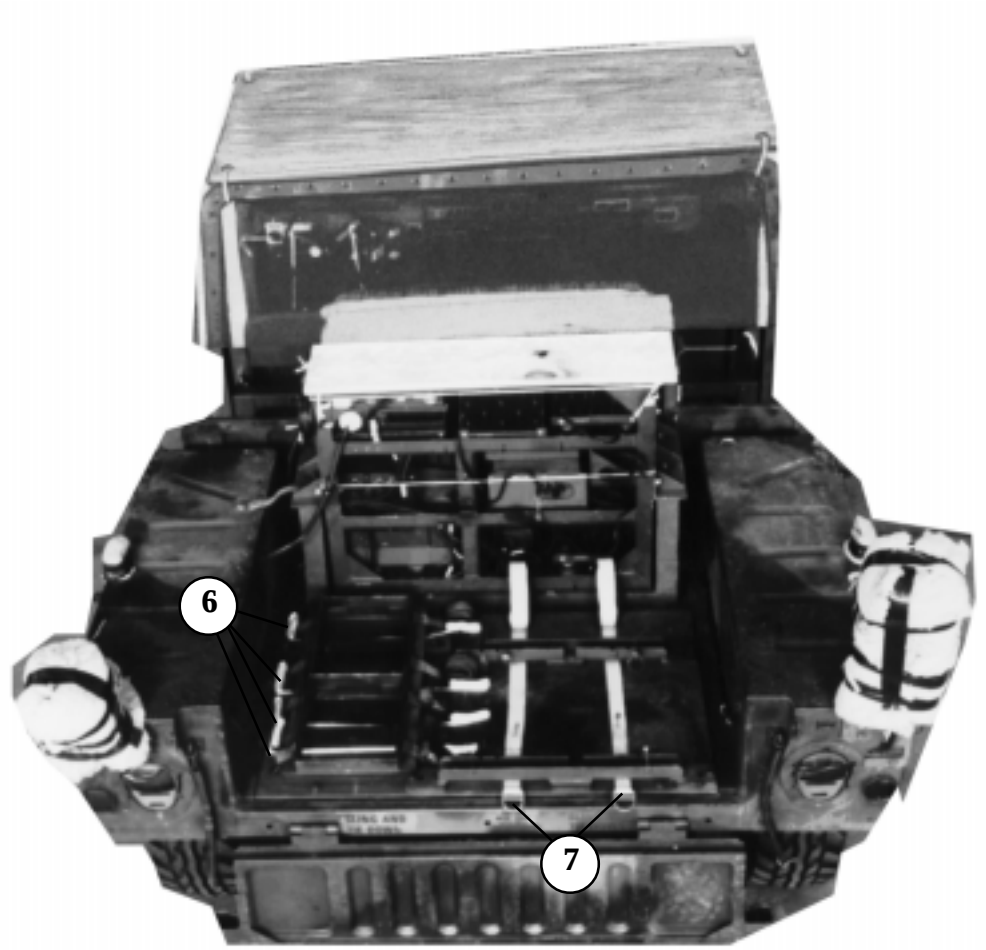

6 Place four lengths of 1/2-inch tubular nylon webbing under the fiber-optic cable bracket in the cargo bed of the truck.

7 Place two 15-foot lashings from rear to front under the generator support bracket in the cargo bed of the truck.

Figure 6-6. Accompanying load secured (continued)

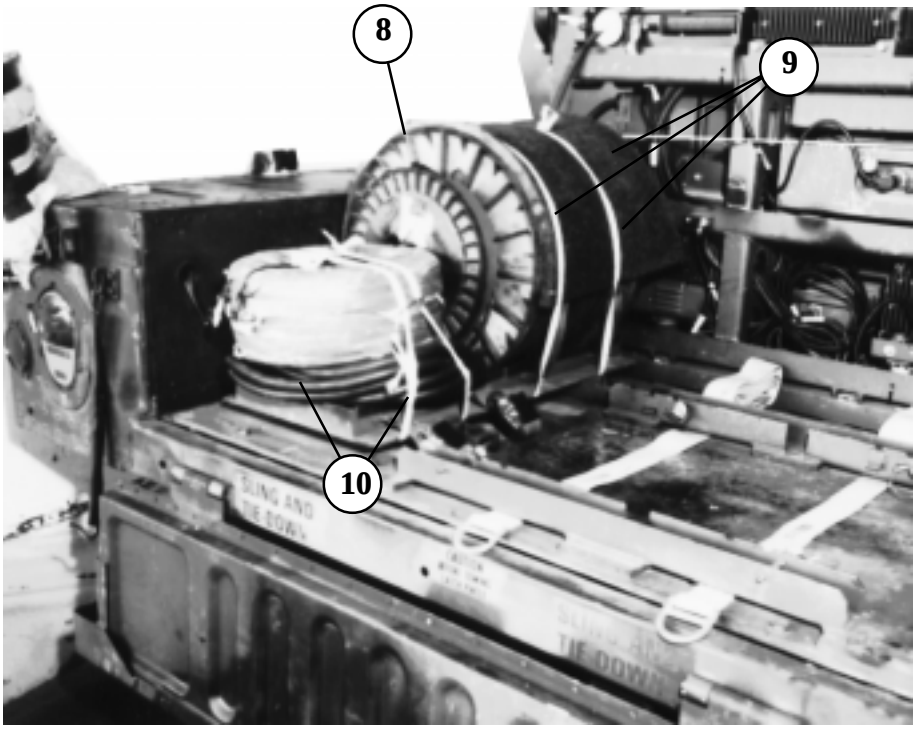

8 Secure the fiber-optic cable to the fiber-optic cable bracket with its securing straps.

9 Place a 1/2- by 14- by 36-inch piece of felt on top of the fiber-optic cable. Safety the cable in place with two prepositioned lengths of 1/2-inch tubular nylon webbing.

10 Position the slave cable on the fiber-optic cable bracket to the rear of the fiber-optic cable. Position the roll of field wire on top of the slave cable. Secure them in place with two prepositioned lengths of 1/2-inch tubular nylon webbing.

Figure 6-6. Accompanying load secured (continued)

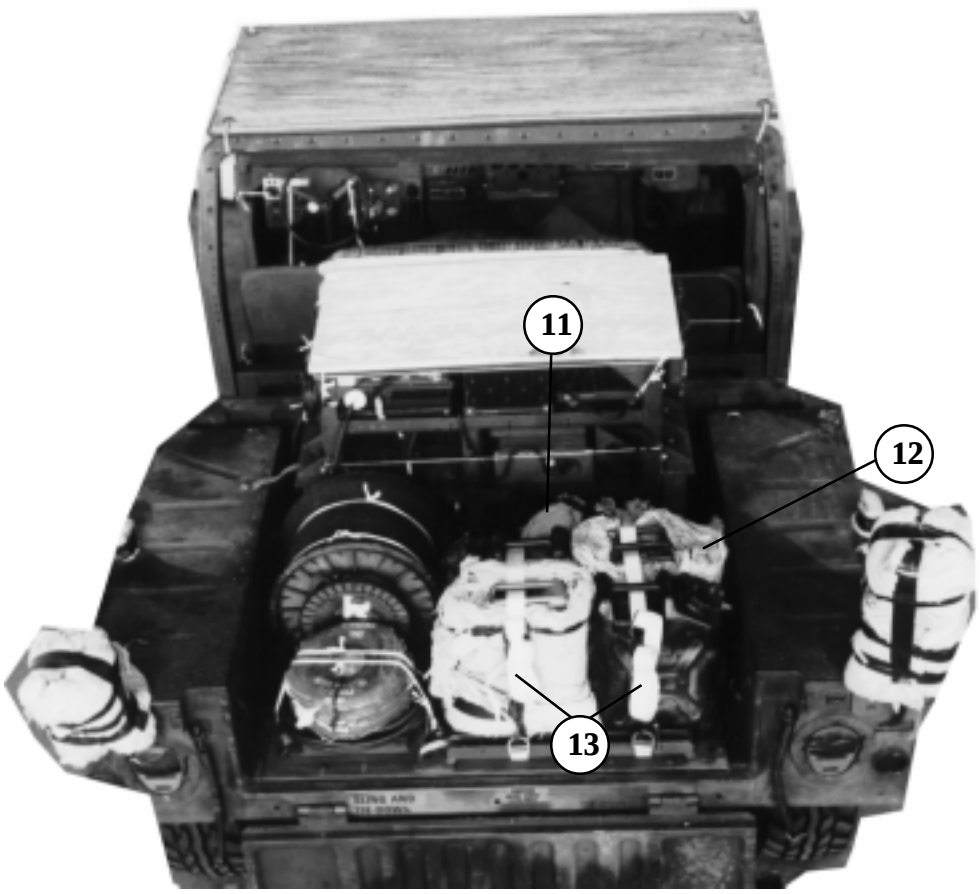

(11) Pad and tape the antenna mounts. Place the antenna mounts to the front of the generator bracket supports on the two prepositioned 15-foot lashings.

(12) Place two fuel cans and two water cans to the rear of the antenna mounts. Pad the cans with cellulose wadding so that there is no metal-to-metal contact. Tape the cellulose wadding in place.

(13) Secure the antenna mounts and cans with two 15-foot prepositioned lashings. Secure the lashings according to FM 10-500-2/TO 13C7-1-5.

Figure 6-6. Accompanying load secured (continued)

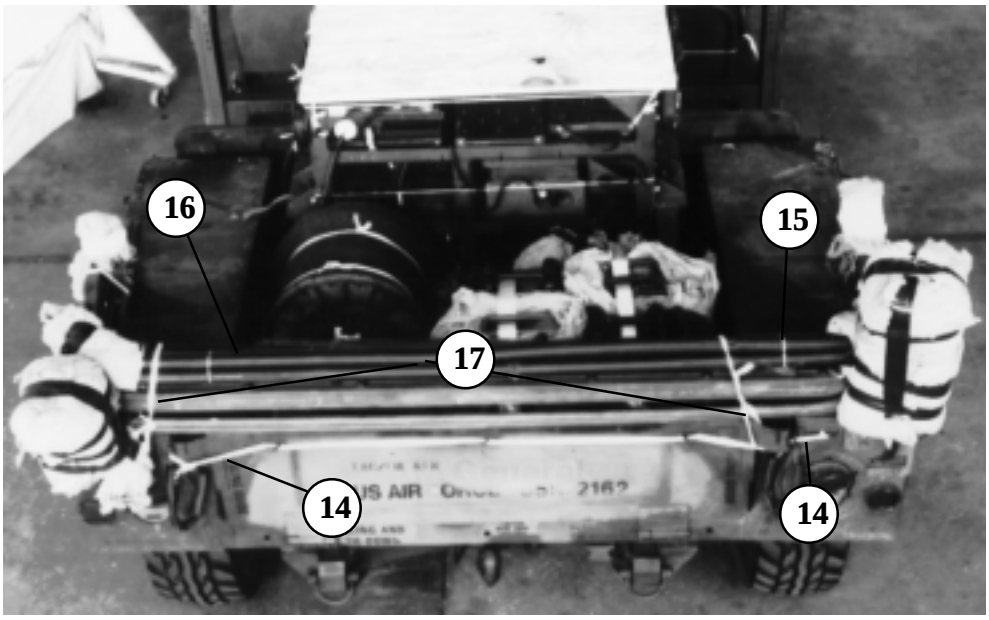

(14) Close the tailgate and secure it with a length of 1/2-inch tubular nylon webbing.

(15) Place the frame and bow assemblies on the rear of the cargo bed. Tie them together with type III nylon cord.

(16) Place the antennas and the antenna boots on the rear of the cargo bed.

(17) Secure the frame, bow assemblies, antennas, and antenna boots with a length of 1/2-inch tubular nylon webbing to the tailgate.

Figure 6-6. Accompanying load secured (continued)

6-5. Installing Lifting Slings

Install lifting slings as shown in Figure 6-7.

6-6. Positioning Truck

Position the truck on the platform as shown in Figure 5-17.

Note: The use of HDDS is optional but recommended.

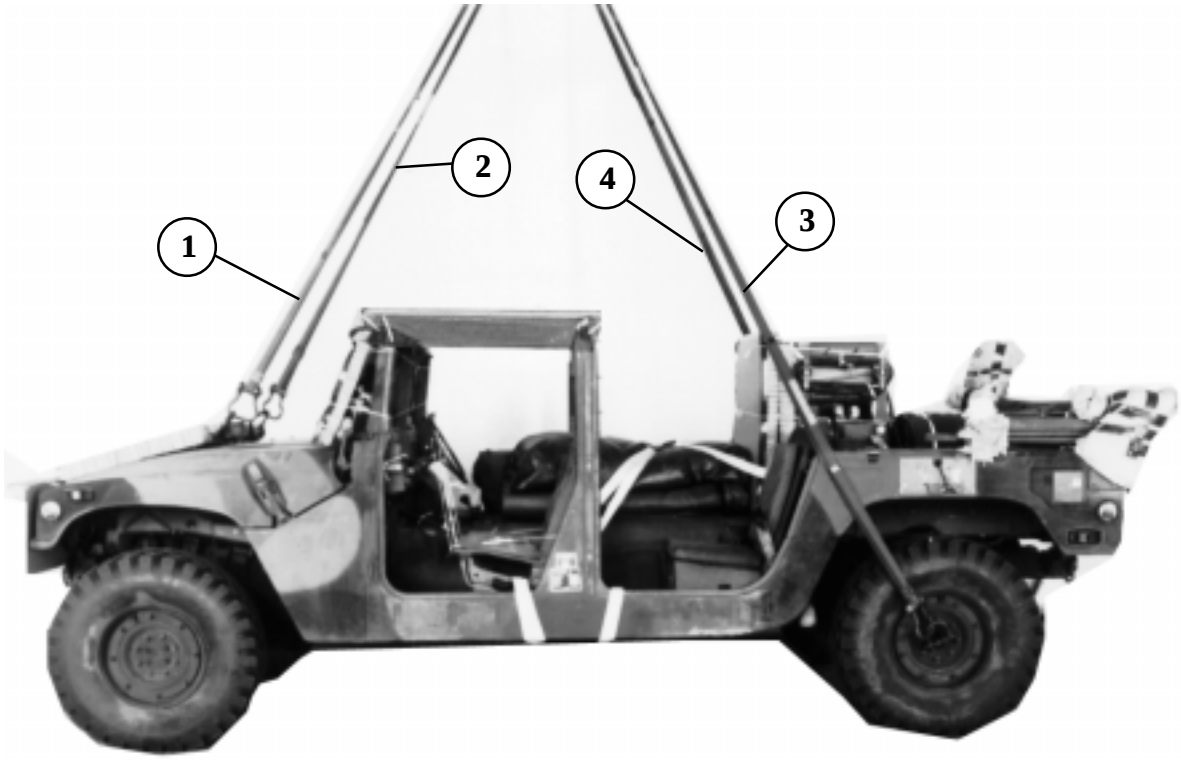

1. Pass a medium clevis through the end of a 9-foot (2-loop), type XXVI nylon webbing sling. Pass another medium clevis through the left front lifting point on the hood of the truck and through the medium clevis of the 9-foot sling.
2. Repeat step 1 above for the right front lifting point.
3. Pass a medium clevis through the end of a 12-foot (2-loop), type XXVI nylon webbing sling. Install the medium clevis to the lifting shackle on the rear wheel.
4. Repeat step 3 above for the right rear wheel shackle.

Figure 6-7. Lifting slings installed

6-7. Lashing Truck

Lash the truck to the platform according to FM 10-500-2/
TO 13C7-1-5 and as shown in Figures 5-18 and 5-19.

6-8. Building Body Side Boards

Build two body side boards as shown in Figure 6-8.

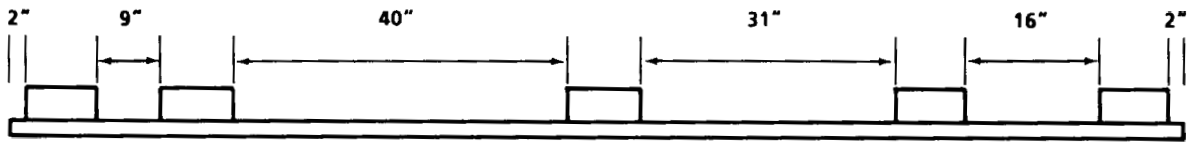

Step:

1. Use one 2- by 6- by 150-inch piece of lumber and five 6- by 10-inch pieces of honeycomb.
2. Glue or tape the first piece of honeycomb 2 inches from either end of the board.
3. Glue or tape the second piece of honeycomb 16 inches behind the first piece of honeycomb.
4. Glue or tape the third piece of honeycomb 31 inches behind the second piece of honeycomb.
5. Glue or tape the fourth piece of honeycomb 40 inches behind the third piece of honeycomb.
6. Glue or tape the fifth piece of honeycomb 9 inches behind the fourth piece of honeycomb.
7. Use the procedures in steps 1 through 6 above to build the second body side board.

Figure 6-8. Body side boards built

6-9. Securing Body Side Boards

Secure the body side boards on the truck as shown in Figure 6-9.

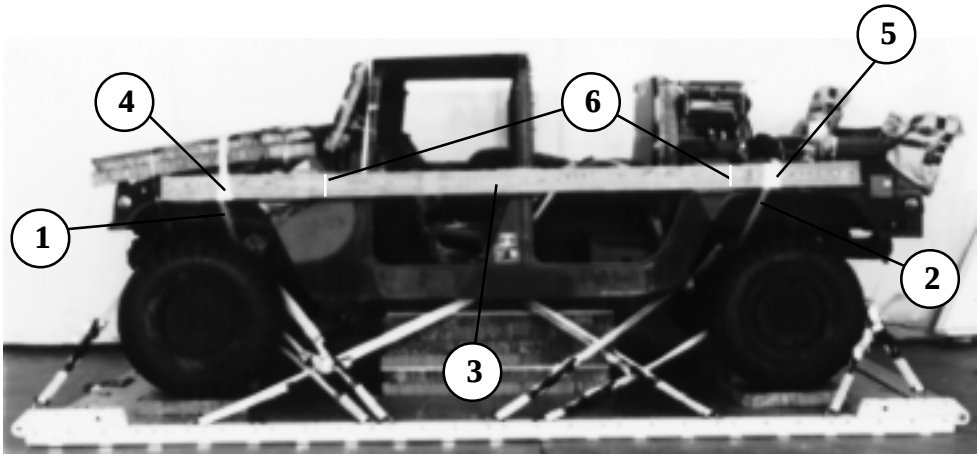

1. Pass a 15-foot tiedown strap around the upper control arm and through its own D-ring on the right front and left front of the truck.
2. Pass a 15-foot tiedown strap around the upper control arm and through its own D-ring on the right rear and left rear of the truck.
3. Hold both body side boards up against the truck with the first piece of honeycomb positioned at the rear of the truck.
4. Run the 15-foot tiedown straps positioned in step 1 above around the boards on the right front and left front of the truck. Secure the ends with D-rings and a load binder.
5. Repeat the procedures in step 4 above for the right rear and left rear of the truck.
6. Safety the body side boards to the mirror brackets in the front and to a convenient point in the rear of the vehicle with type III nylon cord.

Figure 6-9. Body side boards installed

6-10. Installing Suspension Slings and Deadman Tie

Install the suspension slings and the deadman tie as shown in Figure 6-10.

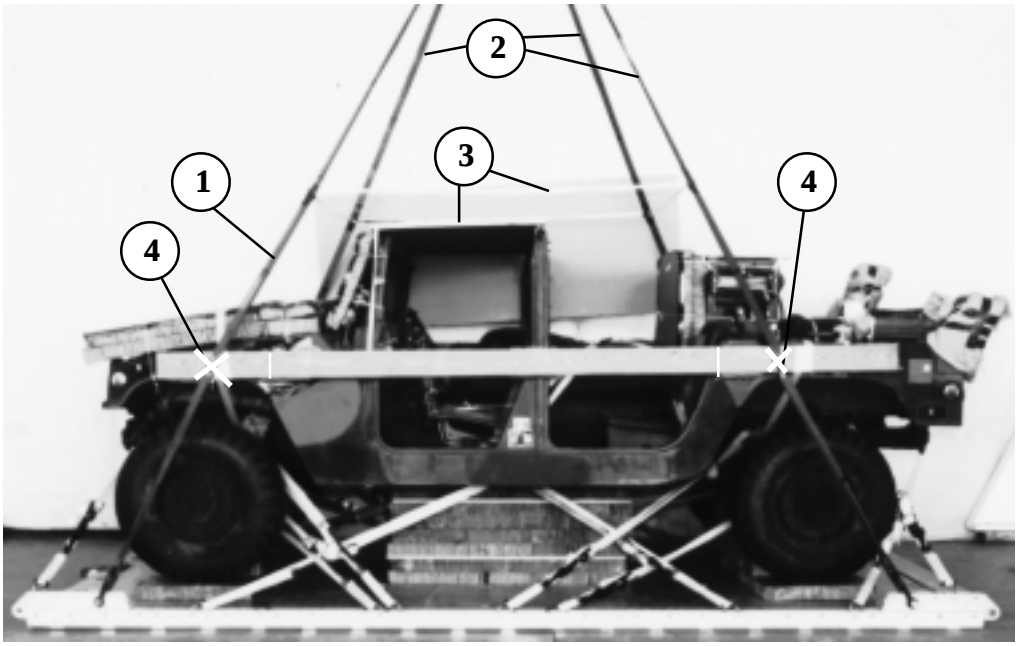

1. Attach a 16-foot (2-loop), type XXVI nylon webbing suspension sling to a large clevis. Attach the clevis to one of the tandem links.
2. Repeat the procedure in step 1 above for the other three tandem links.
3. Raise the four suspension slings above the load, and install a deadman's tie according to FM 10-500-2/TO 13C7-1-5.
4. Remove all slack from the suspension slings and safety the suspension slings to the side boards using type III nylon cord.

Figure 6-10. Suspension slings and deadman tie installed

6-11. Stowing Cargo Parachutes

Use two G-11B cargo parachutes on this load. Stow the cargo parachutes as shown in Figure 5-24.

6-12. Installing Extraction System

Use the EFTC extraction system for this load. Install the components of the EFTC according to FM 10-500-2/TO 13C7-1-5 and as shown in Figure 5-25.

6-13. Installing Release System

Install and attach an M-1 cargo parachute release according to FM 10-500-2/TO 13C7-1-5 and as shown in Figure 5-26.

6-14. Placing Extraction Parachute

Select the extraction parachute and extraction line needed using the extraction line requirements table in FM 10-500-2/TO 13C7-1-5. Place the extraction line on the load for installation in the aircraft.

6-15. Installing Provisions for Emergency Restraints

Select and install the provisions for the emergency aft restraints according to the emergency aft restraint requirements table in FM 10-500-2/TO 13C7-1-5.

6-16. Marking Rigged Load

Mark the rigged load according to FM 10-500-2/TO 13C7-1-5 and as shown in Figure 6-11. Complete Shipper's Declaration for Dangerous Goods and affix to load. If the load varies from the one shown, the weight, height, CB, tip off curve, and parachute requirements must be recomputed.

6-17. Equipment Required

Use the equipment listed in Table 6-1 to rig the load shown in Figure 6-11.

CAUTION
Make the final rigger inspection required by FM 10-500-2/TO 13C7-1-5 before the load leaves the rigging site.

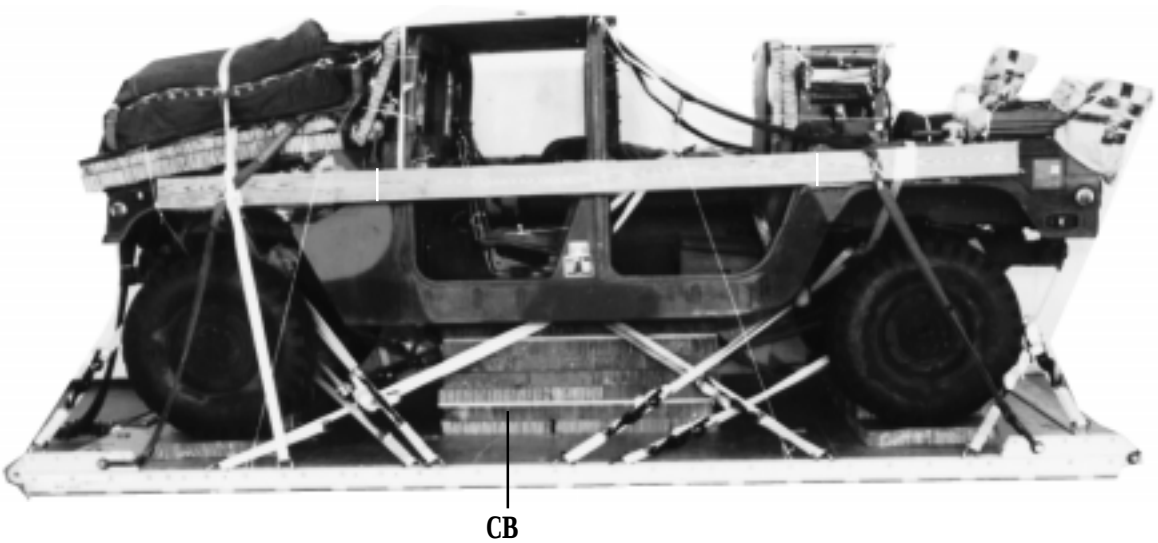

RIGGED LOAD DATA

Weight.....8,810 pounds

Max Weight.....10,500 pounds

Height.....86 inches

Width.....108 inches

Length.....214 inches

Overhang: Front.....4 inches

Rear.....0 inches

Center of Balance (CB)
(from front edge of the platform).....98 inches

Extraction System.....EFTC

Figure 6-11. M998(four seater) with GRC/206 Air Force pallet rigged on a type V platform for low-velocity airport

Table 6-1. Equipment required for rigging the M998 (four seater) with GRC/206 Air Force pallet on a 16-foot type V platform for low-velocity airdrop

National Stock Number	Item	
8040-00-273-8713	Adhesive, paste, 1-gal.	As required
1670-01-035-6054	Bridle (for line bag)	1
	Clevis, suspension:	
4030-00-090-5354	1-in (large)	6
4030-00-678-8562	3/4-in (medium)	8
8305-00-242-3593	Cloth, cotton duck, 60-in	As required
4020-00-240-2146	Cord, nylon, type III, 550-lb.	As required
1670-00-434-5787	Coupling, airdrop extraction force transfer cable, 20-ft	1
	Cover:	
1670-00-360-0328	Clevis, large	3
1670-00-360-0329	Link, type IV	3
8135-00-664-6958	Cushioning material, packaging, cellulose wadding	As required
8305-00-958-3685	Felt, 1/2-in thick	As required
1670-01-183-2678	Leaf, extraction line (line bag)	3
	Line extraction:	
1670-01-062-6313	60-ft (3-loop), type XXVI (C-130)	1
1670-01-107-7651	140-ft (3-loop), type XXVI (for C-141,C-5 or C-17)	1
1670-01-064-4452	60-ft (1-loop), type XXVI with towplate link (for C-17) Drogue Line	1
	Link assembly:	
1670-00-783-5988	Type IV	6
	Two-point:	
5306-00-435-8994	Bolt, 1-in diam, 4-in long	2
5310-00-232-5165	Nut, 1-in, hexagonal	2
1670-00-003-1953	Plate, side, 3 3/4-in	2
5365-00-007-3414	Spacer, large	2
5315-00-010-4659	Nail, steel wire, 8d	As required
1670-00-753-3928	Pad, energy-dissipating, (honeycomb),	
	3- by 36- by 96-in:	14 sheets
	Parachute, cargo	
1670-01-016-7841	G-11B	2
	Parachute, cargo extraction	
1670-01-063-3716	22-ft	1
	Drogue (for C-17)	
1670-01-063-3715	15-ft	1
	Platform, airdrop, type V, 16-ft:	1
1670-01-162-2372	Clevis, assembly (type V)	(22)
1670-01-353-8424	Extraction bracket assembly	(1)
1670-01-353-8425	Bracket assembly, coupling	(1)
1670-01-162-2381	Tandem link assembly (Multipurpose link)	(4)
	Lumber:	
5510-00-220-6146	2- by 4- by:	As required
5510-00-220-6148	2- by 6- by:	As required
5530-00-128-4981	Plywood, 3/4-in:	4 sheets

Table 6-1. Equipment required for rigging the M998 (four seater) with GRC/206 Air Force pallet on a 16-foot type V platform for low-velocity airdrop (continued)

National Stock Number	Item	Quantity
1670-01-097-8816	Release, cargo parachute, M-1	1
	Sling, cargo, airdrop:	
	For suspension:	
1670-01-062-6302	20-ft (2-loop), type XXVI	4
	For lifting:	
1670-01-062-6301	3-ft (2-loop), type XXVI	2
1670-01-062-6303	12-ft (2-loop), type XXVI	2
1670-01-063-7761	16-ft (2-loop), type XXVI	2
	For deployment:	
1670-01-062-6304	9-ft (2-loop), type XXVI	1
	For riser extension:	
1670-01-062-6302	20-ft (2-loop), type XXVI	6
1670-00-040-8219	Strap, parachute release, multi-cut, comes with 3 knives	2
7501-00-266-5016	Tape, adhesive, 2-in	As required
1670-01-344-0825	Vehicle drive-off aid (HDDS)	1
1670-00-937-0271	Tiedown assembly, 15-ft	34
	Webbing:	
8305-00-268-2411	Cotton, 1/4-inch, type I	As required
8305-00-082-5752	Nylon, tubular 1/2-in	As required
8305-00-263-3591	Type VIII	As required

GLOSSARY

ACB attitude control bar

AD airdrop

AFJMAN Air Force joint manual

AFB Air Force base

AFR Air Force regulation

AFTO Air Force technical order

attn attention

BCS battery computer system

CAV command assault vehicle

CB center of balance

CDU computer display unit system

CEU computer energy unit

CGP character graphic printer

CHS-2 command hardware/softeare 2nd generation package

CM communications module

CMD color monitor display

d penny

DA Department of the Army

DD Department of Defense

diam diameter

DMV desert mobility vehicle

DSVT digital subscriber voice terminal

EFTC extraction force transfer coupling

FM field manual/ frequency modulated

ft foot/feet

gal gallon

HCU high capacity unit

HDDS heavy drop derigging system

HMMWV high mobility, multipurpose wheeled vehicle

HQ headquarters

IFSAS initial fire support automated system

in inch

lb pound

LD/R laser designator/rangefinder

LP laser printer

MMLS mobile microwave landing system

no number

NSN nattional stock number

SICPS standard intregrated command post system

SL/CS static line/connector strap

STIK soft top installation kit

TCU transportable computer unit

TM technical manual

TO Technical order

TRADOC United States Army Training and Doctrine Command

UHF ultra high frequency

UPS uninterrupted power supply

US United States

VHF very high frequency

w with

REFERENCES

These documents must be available to the intended users of this publication.

AFJMAN 24-204/TM 38-250. Packaging and Materials Handling: Preparing Hazardous Materials for Military Air Shipments. November 1998.

FM 10-500-2/TO 13C7-1-5. Airdrop of Supplies and Equipment: Rigging Airdrop Platforms. 1 November 1990.

FM 10-517/TO 13C7-1-111 Airdrop of Supplies and Equipment: Rigging 1/4-Ton Utility Truck (HMMWV). 14 November 89

FM 10-500-66/TO 13C7-25-71. Airdrop of Supplies and Equipment: Rigging 2-Litter Armored Ambulance (HMMWV) (Pending Date (1999))

AFTO Form 22. Technical Order Publication Improvement Report. April 1973.

DA Form 2028. Recommended Changes to Publications and Blank Forms. February 1974.

FM 10-500-23
TO 13C-14-461
31 AUGUST 1999

By Order of the Secretary of the Army:

ERIC K. SHINSEKI
General, United States Army
Chief of Staff

Official:

JOEL B. HUDSON
Administrative Assistant to the
Secretary of the Army
00000000000000000

DISTRIBUTION:

Active Army, Army National Guard, and U. S. Army Reserve: To be distributed in accordance with the initial distribution number 110906, requirements for FM 10-500-23.