FOOD SERVICE EQUIPMENT SCHEDULE

ITEM	QUANTITY	DESCRIPTION	EQUIPMENT CLASS	SIZE (MILLIMETERS APPROXIMATE) X	Y	Z	ELECTRICAL VOLTS	PHASE	NON-MOTOR KW	TOTAL AMPS	MOTOR KW	CONN	PLUG TYPE	PLUMBING HW 45 C	HW 60 C	CW	WASTE	ID WASTE	GAS	KW	COMMENTS
65	1	CARVING STATION	A	813	889	889	120	1	–	12.0	–	–	NEMA 5-15P	–	–	–	–	–	–	–	
66	7	HOT FOOD WELL (3 PANS)	A	2153	610	330	208	1	–	10.6	–	P	NEMA 6-15P	–	–	–	–	–	–	–	
66a	3	SHELF PROTECTOR (SNEEZE GUARD)	A	2216	318	356	120	1	–	–	–	H	–	–	–	–	–	–	–	–	
66b	2	SHELF PROTECTOR (SNEEZE GUARD)	A	2216	318	356	120	1	–	–	–	H	–	–	–	–	–	–	–	–	
67	3	COUNTER, HOT/GRILL	A	2438	762	864	–	–	–	–	–	–	–	–	–	–	–	–	–	–	(A-5)
67a	1	TRAY SLIDE		2438	432	152	–	–	–	–	–	–	–	–	–	–	–	–	–	–	
68	6	DISPENSER, DINNER PLATES	C	457	838	1016	–	–	–	–	–	–	–	–	–	–	–	–	–	–	
69	2	GRIDDLE	A	1273	876	578	208	3	–	34	–	H	–	–	–	–	–	–	–	42.0	(A-11), (M-10)
70	2	GRILL STAND	A	1213	835	848	–	–	–	–	–	–	–	–	–	–	–	–	–	–	
70a	2	SPLASH GUARD	A	1829	25	508	–	–	–	4	0.75	H	–	–	–	–	–	–	–	–	(A-5),
71	2	HOOD EXHAUST	A	REF. MECHANICAL			120	1	1.2	10	–	H	–	–	20	–	40	50	–	–	(A-7), (E-7), (M-14), (M-15), (M-26), (M-36)
72	2	FIRE SUPPRESSION SYSTEM	A	–	–	–	–	–	–	–	–	–	–	–	–	–	–	–	–	–	(M-16)
73	2	CABINET, FOOD WARMING (PASS-THRU)	A	1447	991	2115	208	1	–	13	–	H	–	–	–	–	–	–	–	–	(E-11)
74	2	CABINET, PASTRY STORAGE	C	559	737	1854	–	–	–	–	–	–	–	–	–	–	–	–	–	–	
75	1	COUNTER, DESSERT /CONDIMENTS	A	2000	762	864	–	–	–	–	–	–	–	–	–	–	–	–	–	–	(A-5)
76	1	COLD PAN (6) DROP-IN	A	1803	610	483	120	1	–	6	–	P	NEMA 5-15P	–	–	–	–	15	–	–	
77	1	BREATH PROTECTOR/DISPLAY SHELVES	A	1835	406	508	120	1	–	–	–	H		–	–	–	–	–	–	–	
77a	1	TRAY SLIDE	A	1872	356	–	–	–	–	–	–	–		–	–	–	–	–	–	–	(A-5)
78	2	REFRIGERATOR, ROLL-THRU W/RACKS	A	1321	991	2319	120	1	–	16.2	–	P	NEMA 5-20P	–	–	–	–	–	–	–	
79	2	TOASTER	C	560	360	840	208	1	–	24	–	P	NEMA 6-30P	–	–	–	–	–	–	–	
80	3	DISPENSER, SODA	L	580	711	702	120	1	–	8.1	–	P	NEMA 5-15P	–	–	20	–	20	–	–	(M-28)
81	2	BEVERAGE COUNTER W/TROUGH	A	4700	762	864	–	–	–	–	–	–		–	–	–	–	20	–	–	(A-5), (A-8), (M-28)
81a	2	TRAY SLIDE	A	4700	356	–	–	–	–	–	–	–		–	–	–	–	–	–	–	(A-5)
82	2	FRUIT JUICE DISPENSER	L	330	558	482	120	1	–	5.8	–	P	NEMA 5-15P	–	–	20	–	20	–	–	(A-5)
83	1	SANDWICH UNIT W/ SNEEZE GAURD	C	1226	864	1181	120	1	–	8	–	P	NEMA 5-15P								
84	3	ICE MAKER, DISPENSER	A	762	762	914	120	1	–	2.2	–	P	NEMA 5-15P	–	–	15	–	20	–	–	(M-29)
85	4	DISPENSER, JUICE	C	410	430	600	120	1	–	5.6	–	P	NEMA 5-15P	–	–	–	–	–	–	–	
86	3	COUNTER W/TROUGH	A	2438	762	864	–	–	–	–	–	–		–	–	–	–	–	–	–	(A-5), (M-28)
86a	2	TRAY SLIDE	A	2438	356	–	–	–	–	–	–	–		–	–	–	–	–	–	–	(A-5)
87	2	DISPENSER, MILK	C	918	435	1022	120	1	–	2.5	.15	P	NEMA 5-15R	–	–	–	–	–	–	–	
88	4	DISPENSER, CUP & GLASS	C	533	686	914	–	–	–	–	–	–		–	–	–	–	–	–	–	
89		NOT USED																			
90	2	FOOD WARMER	A	315	315	215	120	1	–	3.8	–	P	NEMA 5-15P	–	–	–	–	–	–	–	
91	2	FLOOR TROUGH W/GRATE	A	1219	304	102	–	–	–	–	–	–		–	–	–	100	–	–	–	(M-5)
92	2	ICE MAKING MACHINE	A	1217	864	2057	208	3	–	10.7	–	H		–	–	10	–	20	–	–	(E-12), (M-30)
93		NOT USED																			
94	1	RACK, SYRUP TANK	A	1226	610	1778	–	–	–	–	–	–		–	–	–	–	–	–	–	
95	2	COFFEE DISPENSER WITH PREHEATER	A	430	520	780	120/208	1	8	46.0	–	H		–	–	–	–	–	–	–	
96		NOT USED																			
97		NOT USED																			
97a	2	TRAY SLIDE	A	3658	356	–	–	–	–	–	–	–		–	–	–	–	–	–	–	(A-5)
98	1	RACK, CONDIMENT PACKS (9 BINS)	A	457	533	368	–	–	–	–	–	–		–	–	–	–	–	–	–	
99	2	CAPPUCCINO MACHINE	L	280	560	864	120	1	15	–	–	P	NEMA 5-15P	–	–	15	–	20	–	–	
100		NOT USED																			
101	1	SOFT SERVE MACHINE	A	672	816	1521	208	3	–	14&12	–	H		–	–	–	–	–	–	–	(A-11)
102	1	CONVEYOR W/SOILED TRAY TABLE	A	5714	600	864	–	–	–	–	–	–		–	–	–	–	–	–	–	(A-5), (A-8)
103	1	DISHTABLE, SOILED W/TROUGH	A	2985	750	864	–	–	–	–	–	–		–	–	–	–	–	–	–	(A-5), (A-8), (A-9)
104	1	DISHWASHING MACHINE	A	3048	770	1763	208	3	–	96.1	–	H		–	20	–	50	–	–	–	(E-13), (M-31)
104a	1	BOOSTER HEATER	A	900	580	800	208	3	–	108.3		H		–	20	–	–	–	–	–	(M-22)
105	1	WASTE PULPING EXTRACTOR	A	1805	915	2720	208	3	–	60	–	H		20	–	–	–	60	–	–	(E-4), (M-8), (M-32)
106	3	DOLLY	C	521	546	813	–	–	–	–	–	–		–	–	–	–	–	–	–	
107	2	DUCT SET	A	406	102	–	–	–	–	–	–	–		–	–	–	–	–	–	–	(M-33)
108	2	SINK, SILVER SOAK	C	635	686	762	–	–	–	–	–	–		–	–	–	–	–	–	–	
109	3	SERVICE SINK (FLOOR MOUNTED)	A	635	838	254	–	–	–	–	–	–		15	–	15	50	–	–	–	(M-34)
110	1	DISHTABLE, CLEAN	A	3226	835	546	–	–	–	–	–	–		–	–	–	–	–	–	–	
111	1	CONVEYOR W/SOILED TRAY TABLES	A	2436	635	864	–	–	–	–	–	–		–	–	–	–	–	–	–	(A-5), (A-10)
112	1	SPRAY ASSEMBLY	A	–	–	–	–	–	–	–	–	–		15	–	15	–	–	–	–	
113	1	CLEAN/SANITIZING MACHINE	C	684	457	1156	120	1	–	11	–	P	NEMA 5-15P	–	–	–	–	–	–	–	
114	2	DISPENSER, BOWL W/COVER	C	914	559	613	–	–	–	–	–	–		–	–	–	–	–	–	–	
115	2	WALL MOUNTED SORTING SHELF	A	1087	343	330	–	–	–	–	–	–		–	–	–	–	–	–	–	
116		NOT USED																			
117	2	DISPENSER, TRAY	C	432	737	1270	–	–	–	–	–	–		–	–	–	–	–	–	–	
118	2	BREAD RACK	L	1219	508	1829	–	–	–	–	–	–		–	–	–	–	–	–	–	
119	1	PROOFING CABINET	C	533	819	1772	120	1	–	8.3	–	P	NEMA 5-15P	–	–	–	–	–	–	–	
120	1	REFRIGERATOR DISPLAY	A	1397	762	2006	120	1	–	8	–	P	NEMA 5-15P	–	–	–	–	–	–	–	
121		NOT USED																			
122	1	CHUTE HOT SANDWICH	A	914	1873	838	120/208	1	–	13.2	–	P	NEMA L14-30P	–	–	–	–	–	–	–	
123	2	PIZZA WARMER	C	480	510	590	120	1	–	12.3	–	P	NEMA 5-15P	–	–	–	–	–	–	–	
124	1	CHEESE WARMER	C	304	304	400	120	1	–	3.3	–	P	NEMA 5-15P	–	–	–	–	–	–	–	PROVIDE ELECTRICAL OUTLETS FOR EQUIP. UNDER THE COUNTER.
125	1	NACHOS WARMER	A	580	580	838	120	1	–	10.4	–	P	NEMA 5-15P	–	–	–	–	–	–	–	
126	1	MICROWAVE OVEN	C	457	457	179	120	1	–	17.5	–	P	NEMA 5-20P	–	–	–	–	–	–	–	
126a	1	COUNTER	A		762	864	–	–	–	–	–	–		–	–	–	–	–	–	–	(A-5)
126b	1	COUNTER	A		762	864	–	–	–	–	–	–		–	–	–	–	–	–	–	(A-5)
126c	1	COUNTER	A		762	864	–	–	–	–	–	–		–	–	–	–	–	–	–	(A-5)
126d	1	COUNTER	A		762	864	–	–	–	–	–	–		–	–	–	–	–	–	–	(A-5)
126e	1	COUNTER	A		762	864	–	–	–	–	–	–		–	–	–	–	–	–	–	(A-5)
127	1	DONUT/PASTRY DISPLAY	C	787	609	914	120	1	–	2	–	P	NEMA 5-15P	–	–	–	–	–	–	–	
128	1	HOT DOG ROLLER GRILL	C	457	457	179	120	1	–	9.8	–	P	NEMA 5-15P	–	–	–	–	–	–	–	
129		NOT USED																			
130		NOT USED																			
131		NOT USED																			
132	1	HOOD, EXHAUST	A		(REF	MECHANICAL)															
133	1	CONDIMENT & BEVERAGE W/TROUGH	A	2743	762	914	–	–	–	–	–	–	–	–	–	–	–	25	–	–	(A-5, A-8, M-28))
134	1	SALAD BAR, 8 PAN, W/ SNEEZE GUARD	C	3250	1100	900	120	1	–	9.8	–	P	NEMA 5-15P	–	–	–	–	–	–	–	(A-14)
135		NOT USED																			
136	2	CASHIER STATION W/TRAYSLIDES	A	1200	1260	900	120	1	–	–	–	P	NEMA 5-15P	–	–	–	–	–	–	–	
136a	1	CASHIER STATION W/TRAYSLIDE	A	1200	975	900	120	1	–	–	–	P	NEMA 5-15P	–	–	–	–	–	–	–	
137		NOT USED																			
138		NOT USED																			
139		NOT USED																			
140		NOT USED																			
141	1	MECHANICAL COLD PAN	A	1030	800	1048	120	1	–	3.9	–	P	NEMA 5-15P	–	–	–	–	–	–	–	
142	1	OPEN VERTICAL MERCHANDISER	A	1200	800	1950	208	1&3	–	3.686	–	H		–	–	–	–	–	–	–	

COMMENTS KEY LIST: (CONTINUATION)

- E-1 EVAP UNIT SHALL BE POWERED FROM FREEZER CONDENSING UNIT.
- E-2 102V. CIRCUIT REQUIRED FOR DOOR HEATERS, LIGHTS, AND HEAT TRACE.
- E-3 120V. CIRCUIT REQUIRED FOR DOOR MAGNETIC DOOR SEAL AND LIGHTS.
- E-4 SINGLE POINT POWER CONNECTION TO WALL MOUNTED CONTROL PANEL.
- E-5 PROVIDE ATTACHED DISPOSAL UNIT RATED AT 208V, 1P, 0.75KW.
- E-6 TWO RECEPTACLES PER OVEN REQUIRED. ONE RECEPTACLE IS FOR ONE 0.75KW
- E-7 PROVIDE (2) 120V CIRCUITS FOR CONTROL PANEL.
- E-8 PROVIDE 1 ELECTRICAL OUTLET FOR DRAIN STATION AND 1 FOR HEAT LAMP.
- E-9 PROVIDE 1 ELECTRICAL OUTLET FOR EACH FRYER. 1 FOR DRAIN STATION, AND 1 FOR HEAT LAMP.
- E-10 PROVIDE ONE 208V. 3P CIRCUIT FOR 9KW BOOSTER HEATER. AND ONE 208V, 3P CIRCUIT FOR 4KW MOTOR AND 5KW HEATER, IE TWO CIRCUITS REQUIRED.
- E-11 4 WIRES (INCLUDING GROUND) REQUIRED.
- E-12 10.7 AMPS SHOWN IS MINIMUN CIRCUIT ANPACITY.
- E-13 SINGLE POINT ELECTRICAL CONNECTION.

EQUIPMENT CLASSES	NOTES:
A – CONTRATOR FURNISHED, CONTRACTOR INSTALLED C – GOVERNMENT FURNISHED, GOVERNMENT INSTALLED, L – OTHER H ELECTRICAL HARDWARE CONNECTION REQUIRED	P ELECTRICAL PLUG CONNECTION REQUIRED

EQUIPMENT SIZE KEY:

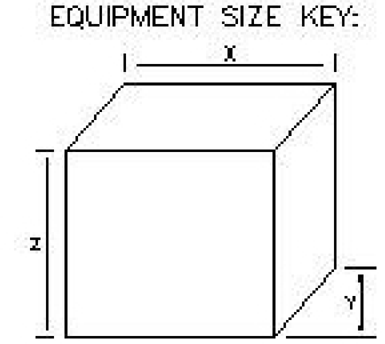

US Army Corps of Engineers Norfolk District

DATE: OCT.2000
SCALE: AS NOTED
NORFOLK DISTRICT FILE NO. ###
SPECIFICATION NO. ###
Plot scale 25.4 =1
DESIGNED: SRL
CHECKED: AES
DRAWN: JMY
SUBMITTED: JSW
PROJECT NO. 8506K
DRAWING NO. ###
Plot date OCT.2000
File name

NORFOLK DISTRICT
CORPS OF ENGINEERS
NORFOLK, VIRGINIA

STANDARD DEFINITIVE DESIGN FOR ENL. PERSONNEL DINING FACILITY (251–500 PERSON CAPACITY)

KITCHEN EQUIPMENT SCHEDULE

K–3

SHEET 10 OF 16